9+185	32400	Motorcycles	-	14	-	56	Traffic light	0	-	Average (of DGAC and PCC)	0
9+185	32400	Auxiliary Vehicle	-	-	-	56	Traffic light	0	-	Average (of DGAC and PCC)	0
9+375	*32400*	*Total*	-	*2160*	-	-	*none*	-	-	*Average (of DGAC and PCC)*	*0*
9+375	32400	Automobiles	-	1260	-	56	none	-	-	Average (of DGAC and PCC)	0
9+375	32400	Medium trucks	-	770	-	56	none	-	-	Average (of DGAC and PCC)	0
9+375	32400	Heavy trucks	-	101	-	56	none	-	-	Average (of DGAC and PCC)	0
9+375	32400	Buses	-	15	-	56	none	-	-	Average (of DGAC and PCC)	0
9+375	32400	Motorcycles	-	14	-	56	none	-	-	Average (of DGAC and PCC)	0
9+375	32400	Auxiliary Vehicle	-	-	-	56	none	-	-	Average (of DGAC and PCC)	0
9+596	*32400*	*Total*	-	*2160*	-	-	*none*	-	-	*Average (of DGAC and PCC)*	*0*
9+596	32400	Automobiles	-	1260	-	56	none	-	-	Average (of DGAC and PCC)	0
9+596	32400	Medium trucks	-	770	-	56	none	-	-	Average (of DGAC and PCC)	0
9+596	32400	Heavy trucks	-	101	-	56	none	-	-	Average (of DGAC and PCC)	0
9+596	32400	Buses	-	15	-	56	none	-	-	Average (of DGAC and PCC)	0
9+596	32400	Motorcycles	-	14	-	56	none	-	-	Average (of DGAC and PCC)	0
9+596	32400	Auxiliary Vehicle	-	-	-	56	none	-	-	Average (of DGAC and PCC)	0
10+731	*32910*	*Total*	-	*2194*	-	-	*Traffic light*	*0*	-	*Average (of DGAC and PCC)*	*0*
10+731	32910	Automobiles	-	1280	-	56	Traffic light	0	-	Average (of DGAC and PCC)	0
10+731	32910	Medium trucks	-	782	-	56	Traffic light	0	-	Average (of DGAC and PCC)	0
10+731	32910	Heavy trucks	-	103	-	56	Traffic light	0	-	Average (of DGAC and PCC)	0
10+731	32910	Buses	-	15	-	56	Traffic light	0	-	Average (of DGAC and PCC)	0
10+731	32910	Motorcycles	-	14	-	56	Traffic light	0	-	Average (of DGAC and PCC)	0
10+731	32910	Auxiliary Vehicle	-	-	-	56	Traffic light	0	-	Average (of DGAC and PCC)	0
12+138	*29700*	*Total*	-	*1980*	-	-	*Traffic light*	*0*	-	*Average (of DGAC and PCC)*	*0*
12+138	29700	Automobiles	-	1155	-	56	Traffic light	0	-	Average (of DGAC and PCC)	0
12+138	29700	Medium trucks	-	705	-	56	Traffic light	0	-	Average (of DGAC and PCC)	0
12+138	29700	Heavy trucks	-	93	-	56	Traffic light	0	-	Average (of DGAC and PCC)	0
12+138	29700	Buses	-	14	-	56	Traffic light	0	-	Average (of DGAC and PCC)	0
12+138	29700	Motorcycles	-	13	-	56	Traffic light	0	-	Average (of DGAC and PCC)	0
12+138	29700	Auxiliary Vehicle	-	-	-	56	Traffic light	0	-	Average (of DGAC and PCC)	0
13+015	*29700*	*Total*	-	*1980*	-	-	*none*	-	-	*Average (of DGAC and PCC)*	*0*
13+015	29700	Automobiles	-	1155	-	56	none	-	-	Average (of DGAC and PCC)	0
13+015	29700	Medium trucks	-	705	-	56	none	-	-	Average (of DGAC and PCC)	0
13+015	29700	Heavy trucks	-	93	-	56	none	-	-	Average (of DGAC and PCC)	0
13+015	29700	Buses	-	14	-	56	none	-	-	Average (of DGAC and PCC)	0
13+015	29700	Motorcycles	-	13	-	56	none	-	-	Average (of DGAC and PCC)	0
13+015	29700	Auxiliary Vehicle	-	-	-	56	none	-	-	Average (of DGAC and PCC)	0
14+695	*33165*	*Total*	-	*2211*	-	-	*Traffic light*	*0*	-	*Average (of DGAC and PCC)*	*0*
14+695	33165	Automobiles	-	1290	-	56	Traffic light	0	-	Average (of DGAC and PCC)	0
14+695	33165	Medium trucks	-	788	-	56	Traffic light	0	-	Average (of DGAC and PCC)	0
14+695	33165	Heavy trucks	-	104	-	56	Traffic light	0	-	Average (of DGAC and PCC)	0
14+695	33165	Buses	-	15	-	56	Traffic light	0	-	Average (of DGAC and PCC)	0
14+695	33165	Motorcycles	-	14	-	56	Traffic light	0	-	Average (of DGAC and PCC)	0
14+695	33165	Auxiliary Vehicle	-	-	-	56	Traffic light	0	-	Average (of DGAC and PCC)	0
15+727	*25215*	*Total*	-	*1681*	-	-	*Traffic light*	*0*	-	*Average (of DGAC and PCC)*	*0*
15+727	25215	Automobiles	-	980	-	56	Traffic light	0	-	Average (of DGAC and PCC)	0
15+727	25215	Medium trucks	-	599	-	56	Traffic light	0	-	Average (of DGAC and PCC)	0
15+727	25215	Heavy trucks	-	79	-	56	Traffic light	0	-	Average (of DGAC and PCC)	0
15+727	25215	Buses	-	12	-	56	Traffic light	0	-	Average (of DGAC and PCC)	0
15+727	25215	Motorcycles	-	11	-	56	Traffic light	0	-	Average (of DGAC and PCC)	0
15+727	25215	Auxiliary Vehicle	-	-	-	56	Traffic light	0	-	Average (of DGAC and PCC)	0
17+563	*645*	*Total*	-	*43*	-	-	*Traffic light*	*0*	-	*Average (of DGAC and PCC)*	*0*
17+563	645	Automobiles	-	24	-	56	Traffic light	0	-	Average (of DGAC and PCC)	0
17+563	645	Medium trucks	-	15	-	56	Traffic light	0	-	Average (of DGAC and PCC)	0
17+563	645	Heavy trucks	-	2	-	56	Traffic light	0	-	Average (of DGAC and PCC)	0
17+563	645	Buses	-	1	-	56	Traffic light	0	-	Average (of DGAC and PCC)	0
17+563	645	Motorcycles	-	1	-	56	Traffic light	0	-	Average (of DGAC and PCC)	0
17+563	645	Auxiliary Vehicle	-	-	-	56	Traffic light	0	-	Average (of DGAC and PCC)	0
17+718	-						-	-	-	-	-
0+000	*645*	*Total*	-	*43*	-	-	*none*	-	-	*Average (of DGAC and PCC)*	*0*
0+000	645	Automobiles	-	24	-	56	none	-	-	Average (of DGAC and PCC)	0
0+000	645	Medium trucks	-	15	-	56	none	-	-	Average (of DGAC and PCC)	0
0+000	645	Heavy trucks	-	2	-	56	none	-	-	Average (of DGAC and PCC)	0
0+000	645	Buses	-	1	-	56	none	-	-	Average (of DGAC and PCC)	0
0+000	645	Motorcycles	-	1	-	56	none	-	-	Average (of DGAC and PCC)	0
0+000	645	Auxiliary Vehicle	-	-	-	56	none	-	-	Average (of DGAC and PCC)	0
Tyler Ave SB	**Traffic direction:**	**In entry direction**									
8+855	*41565*	*Total*	-	*2771*	-	-	*none*	-	-	*Average (of DGAC and PCC)*	*0*
8+855	41565	Automobiles	-	1617	-	40	none	-	-	Average (of DGAC and PCC)	0
8+855	41565	Medium trucks	-	987	-	40	none	-	-	Average (of DGAC and PCC)	0

8+855	41565	Heavy trucks	-	130	-	40	none	-	-	Average (of DGAC and PCC)	0
8+855	41565	Buses	-	19	-	40	none	-	-	Average (of DGAC and PCC)	0
8+855	41565	Motorcycles	-	18	-	40	none	-	-	Average (of DGAC and PCC)	0
8+855	41565	Auxiliary Vehicle	-	-	-	40	none	-	-	Average (of DGAC and PCC)	0
9+080	*41565*	*Total*	-	*2771*	-	-	*none*	-	-	*Average (of DGAC and PCC)*	*0*
9+080	41565	Automobiles	-	1617	-	40	none	-	-	Average (of DGAC and PCC)	0
9+080	41565	Medium trucks	-	987	-	40	none	-	-	Average (of DGAC and PCC)	0
9+080	41565	Heavy trucks	-	130	-	40	none	-	-	Average (of DGAC and PCC)	0
9+080	41565	Buses	-	19	-	40	none	-	-	Average (of DGAC and PCC)	0
9+080	41565	Motorcycles	-	18	-	40	none	-	-	Average (of DGAC and PCC)	0
9+080	41565	Auxiliary Vehicle	-	-	-	40	none	-	-	Average (of DGAC and PCC)	0
9+159	*41565*	*Total*	-	*2771*	-	-	*none*	-	-	*Average (of DGAC and PCC)*	*0*
9+159	41565	Automobiles	-	1617	-	40	none	-	-	Average (of DGAC and PCC)	0
9+159	41565	Medium trucks	-	987	-	40	none	-	-	Average (of DGAC and PCC)	0
9+159	41565	Heavy trucks	-	130	-	40	none	-	-	Average (of DGAC and PCC)	0
9+159	41565	Buses	-	19	-	40	none	-	-	Average (of DGAC and PCC)	0
9+159	41565	Motorcycles	-	18	-	40	none	-	-	Average (of DGAC and PCC)	0
9+159	41565	Auxiliary Vehicle	-	-	-	40	none	-	-	Average (of DGAC and PCC)	0
9+219	*41565*	*Total*	-	*2771*	-	-	*none*	-	-	*Average (of DGAC and PCC)*	*0*
9+219	41565	Automobiles	-	1617	-	40	none	-	-	Average (of DGAC and PCC)	0
9+219	41565	Medium trucks	-	987	-	40	none	-	-	Average (of DGAC and PCC)	0
9+219	41565	Heavy trucks	-	130	-	40	none	-	-	Average (of DGAC and PCC)	0
9+219	41565	Buses	-	19	-	40	none	-	-	Average (of DGAC and PCC)	0
9+219	41565	Motorcycles	-	18	-	40	none	-	-	Average (of DGAC and PCC)	0
9+219	41565	Auxiliary Vehicle	-	-	-	40	none	-	-	Average (of DGAC and PCC)	0
9+295	*41565*	*Total*	-	*2771*	-	-	*Traffic light*	*0*	-	*Average (of DGAC and PCC)*	*0*
9+295	41565	Automobiles	-	1617	-	40	Traffic light	0	-	Average (of DGAC and PCC)	0
9+295	41565	Medium trucks	-	987	-	40	Traffic light	0	-	Average (of DGAC and PCC)	0
9+295	41565	Heavy trucks	-	130	-	40	Traffic light	0	-	Average (of DGAC and PCC)	0
9+295	41565	Buses	-	19	-	40	Traffic light	0	-	Average (of DGAC and PCC)	0
9+295	41565	Motorcycles	-	18	-	40	Traffic light	0	-	Average (of DGAC and PCC)	0
9+295	41565	Auxiliary Vehicle	-	-	-	40	Traffic light	0	-	Average (of DGAC and PCC)	0
9+897	*41565*	*Total*	-	*2771*	-	-	*none*	-	-	*Average (of DGAC and PCC)*	*0*
9+897	41565	Automobiles	-	1617	-	40	none	-	-	Average (of DGAC and PCC)	0
9+897	41565	Medium trucks	-	987	-	40	none	-	-	Average (of DGAC and PCC)	0
9+897	41565	Heavy trucks	-	130	-	40	none	-	-	Average (of DGAC and PCC)	0
9+897	41565	Buses	-	19	-	40	none	-	-	Average (of DGAC and PCC)	0
9+897	41565	Motorcycles	-	18	-	40	none	-	-	Average (of DGAC and PCC)	0
9+897	41565	Auxiliary Vehicle	-	-	-	40	none	-	-	Average (of DGAC and PCC)	0
9+989	*41565*	*Total*	-	*2771*	-	-	*none*	-	-	*Average (of DGAC and PCC)*	*0*
9+989	41565	Automobiles	-	1617	-	40	none	-	-	Average (of DGAC and PCC)	0
9+989	41565	Medium trucks	-	987	-	40	none	-	-	Average (of DGAC and PCC)	0
9+989	41565	Heavy trucks	-	130	-	40	none	-	-	Average (of DGAC and PCC)	0
9+989	41565	Buses	-	19	-	40	none	-	-	Average (of DGAC and PCC)	0
9+989	41565	Motorcycles	-	18	-	40	none	-	-	Average (of DGAC and PCC)	0
9+989	41565	Auxiliary Vehicle	-	-	-	40	none	-	-	Average (of DGAC and PCC)	0
10+301	*41565*	*Total*	-	*2771*	-	-	*none*	-	-	*Average (of DGAC and PCC)*	*0*
10+301	41565	Automobiles	-	1617	-	40	none	-	-	Average (of DGAC and PCC)	0
10+301	41565	Medium trucks	-	987	-	40	none	-	-	Average (of DGAC and PCC)	0
10+301	41565	Heavy trucks	-	130	-	40	none	-	-	Average (of DGAC and PCC)	0
10+301	41565	Buses	-	19	-	40	none	-	-	Average (of DGAC and PCC)	0
10+301	41565	Motorcycles	-	18	-	40	none	-	-	Average (of DGAC and PCC)	0
10+301	41565	Auxiliary Vehicle	-	-	-	40	none	-	-	Average (of DGAC and PCC)	0
10+443	*41565*	*Total*	-	*2771*	-	-	*none*	-	-	*Average (of DGAC and PCC)*	*0*
10+443	41565	Automobiles	-	1617	-	40	none	-	-	Average (of DGAC and PCC)	0
10+443	41565	Medium trucks	-	987	-	40	none	-	-	Average (of DGAC and PCC)	0
10+443	41565	Heavy trucks	-	130	-	40	none	-	-	Average (of DGAC and PCC)	0
10+443	41565	Buses	-	19	-	40	none	-	-	Average (of DGAC and PCC)	0
10+443	41565	Motorcycles	-	18	-	40	none	-	-	Average (of DGAC and PCC)	0
10+443	41565	Auxiliary Vehicle	-	-	-	40	none	-	-	Average (of DGAC and PCC)	0
10+494	*41565*	*Total*	-	*2771*	-	-	*none*	-	-	*Average (of DGAC and PCC)*	*0*
10+494	41565	Automobiles	-	1617	-	40	none	-	-	Average (of DGAC and PCC)	0
10+494	41565	Medium trucks	-	987	-	40	none	-	-	Average (of DGAC and PCC)	0
10+494	41565	Heavy trucks	-	130	-	40	none	-	-	Average (of DGAC and PCC)	0
10+494	41565	Buses	-	19	-	40	none	-	-	Average (of DGAC and PCC)	0
10+494	41565	Motorcycles	-	18	-	40	none	-	-	Average (of DGAC and PCC)	0
10+494	41565	Auxiliary Vehicle	-	-	-	40	none	-	-	Average (of DGAC and PCC)	0
10+960	*41565*	*Total*	-	*2771*	-	-	*none*	-	-	*Average (of DGAC and PCC)*	*0*
10+960	41565	Automobiles	-	1617	-	40	none	-	-	Average (of DGAC and PCC)	0
10+960	41565	Medium trucks	-	987	-	40	none	-	-	Average (of DGAC and PCC)	0

10+960	41565	Heavy trucks	-	130	-	40	none	-	-	Average (of DGAC and PCC)	0
10+960	41565	Buses	-	19	-	40	none	-	-	Average (of DGAC and PCC)	0
10+960	41565	Motorcycles	-	18	-	40	none	-	-	Average (of DGAC and PCC)	0
10+960	41565	Auxiliary Vehicle	-	-	-	40	none	-	-	Average (of DGAC and PCC)	0
11+832	*14280*	*Total*	-	*952*	-	-	*Traffic light*	*0*	-	*Average (of DGAC and PCC)*	*0*
11+832	14280	Automobiles	-	555	-	40	Traffic light	0	-	Average (of DGAC and PCC)	0
11+832	14280	Medium trucks	-	339	-	40	Traffic light	0	-	Average (of DGAC and PCC)	0
11+832	14280	Heavy trucks	-	45	-	40	Traffic light	0	-	Average (of DGAC and PCC)	0
11+832	14280	Buses	-	7	-	40	Traffic light	0	-	Average (of DGAC and PCC)	0
11+832	14280	Motorcycles	-	6	-	40	Traffic light	0	-	Average (of DGAC and PCC)	0
11+832	14280	Auxiliary Vehicle	-	-	-	40	Traffic light	0	-	Average (of DGAC and PCC)	0
12+140	*14280*	*Total*	-	*952*	-	-	*none*	-	-	*Average (of DGAC and PCC)*	*0*
12+140	14280	Automobiles	-	555	-	40	none	-	-	Average (of DGAC and PCC)	0
12+140	14280	Medium trucks	-	339	-	40	none	-	-	Average (of DGAC and PCC)	0
12+140	14280	Heavy trucks	-	45	-	40	none	-	-	Average (of DGAC and PCC)	0
12+140	14280	Buses	-	7	-	40	none	-	-	Average (of DGAC and PCC)	0
12+140	14280	Motorcycles	-	6	-	40	none	-	-	Average (of DGAC and PCC)	0
12+140	14280	Auxiliary Vehicle	-	-	-	40	none	-	-	Average (of DGAC and PCC)	0
12+255	*13980*	*Total*	-	*932*	-	-	*Traffic light*	*0*	-	*Average (of DGAC and PCC)*	*0*
12+255	13980	Automobiles	-	543	-	40	Traffic light	0	-	Average (of DGAC and PCC)	0
12+255	13980	Medium trucks	-	332	-	40	Traffic light	0	-	Average (of DGAC and PCC)	0
12+255	13980	Heavy trucks	-	44	-	40	Traffic light	0	-	Average (of DGAC and PCC)	0
12+255	13980	Buses	-	7	-	40	Traffic light	0	-	Average (of DGAC and PCC)	0
12+255	13980	Motorcycles	-	6	-	40	Traffic light	0	-	Average (of DGAC and PCC)	0
12+255	13980	Auxiliary Vehicle	-	-	-	40	Traffic light	0	-	Average (of DGAC and PCC)	0
13+507	*25635*	*Total*	-	*1709*	-	-	*Traffic light*	*0*	-	*Average (of DGAC and PCC)*	*0*
13+507	25635	Automobiles	-	997	-	40	Traffic light	0	-	Average (of DGAC and PCC)	0
13+507	25635	Medium trucks	-	609	-	40	Traffic light	0	-	Average (of DGAC and PCC)	0
13+507	25635	Heavy trucks	-	80	-	40	Traffic light	0	-	Average (of DGAC and PCC)	0
13+507	25635	Buses	-	12	-	40	Traffic light	0	-	Average (of DGAC and PCC)	0
13+507	25635	Motorcycles	-	11	-	40	Traffic light	0	-	Average (of DGAC and PCC)	0
13+507	25635	Auxiliary Vehicle	-	-	-	40	Traffic light	0	-	Average (of DGAC and PCC)	0
13+960	-						-	-	-	-	-
0+000	*25635*	*Total*	-	*1709*	-	-	*none*	-	-	*Average (of DGAC and PCC)*	*0*
0+000	25635	Automobiles	-	997	-	40	none	-	-	Average (of DGAC and PCC)	0
0+000	25635	Medium trucks	-	609	-	40	none	-	-	Average (of DGAC and PCC)	0
0+000	25635	Heavy trucks	-	80	-	40	none	-	-	Average (of DGAC and PCC)	0
0+000	25635	Buses	-	12	-	40	none	-	-	Average (of DGAC and PCC)	0
0+000	25635	Motorcycles	-	11	-	40	none	-	-	Average (of DGAC and PCC)	0
0+000	25635	Auxiliary Vehicle	-	-	-	40	none	-	-	Average (of DGAC and PCC)	0
Tyler Ave NB	**Traffic direction:**	**In entry direction**									
8+855	*26595*	*Total*	-	*1773*	-	-	*none*	-	-	*Average (of DGAC and PCC)*	*0*
8+855	26595	Automobiles	-	1035	-	40	none	-	-	Average (of DGAC and PCC)	0
8+855	26595	Medium trucks	-	632	-	40	none	-	-	Average (of DGAC and PCC)	0
8+855	26595	Heavy trucks	-	83	-	40	none	-	-	Average (of DGAC and PCC)	0
8+855	26595	Buses	-	12	-	40	none	-	-	Average (of DGAC and PCC)	0
8+855	26595	Motorcycles	-	11	-	40	none	-	-	Average (of DGAC and PCC)	0
8+855	26595	Auxiliary Vehicle	-	-	-	40	none	-	-	Average (of DGAC and PCC)	0
9+289	*26595*	*Total*	-	*1773*	-	-	*Traffic light*	*0*	-	*Average (of DGAC and PCC)*	*0*
9+289	26595	Automobiles	-	1035	-	40	Traffic light	0	-	Average (of DGAC and PCC)	0
9+289	26595	Medium trucks	-	632	-	40	Traffic light	0	-	Average (of DGAC and PCC)	0
9+289	26595	Heavy trucks	-	83	-	40	Traffic light	0	-	Average (of DGAC and PCC)	0
9+289	26595	Buses	-	12	-	40	Traffic light	0	-	Average (of DGAC and PCC)	0
9+289	26595	Motorcycles	-	11	-	40	Traffic light	0	-	Average (of DGAC and PCC)	0
9+289	26595	Auxiliary Vehicle	-	-	-	40	Traffic light	0	-	Average (of DGAC and PCC)	0
10+554	*13440*	*Total*	-	*896*	-	-	*Traffic light*	*0*	-	*Average (of DGAC and PCC)*	*0*
10+554	13440	Automobiles	-	523	-	40	Traffic light	0	-	Average (of DGAC and PCC)	0
10+554	13440	Medium trucks	-	319	-	40	Traffic light	0	-	Average (of DGAC and PCC)	0
10+554	13440	Heavy trucks	-	42	-	40	Traffic light	0	-	Average (of DGAC and PCC)	0
10+554	13440	Buses	-	6	-	40	Traffic light	0	-	Average (of DGAC and PCC)	0
10+554	13440	Motorcycles	-	6	-	40	Traffic light	0	-	Average (of DGAC and PCC)	0
10+554	13440	Auxiliary Vehicle	-	-	-	40	Traffic light	0	-	Average (of DGAC and PCC)	0
10+667	*13440*	*Total*	-	*896*	-	-	*none*	-	-	*Average (of DGAC and PCC)*	*0*
10+667	13440	Automobiles	-	523	-	40	none	-	-	Average (of DGAC and PCC)	0
10+667	13440	Medium trucks	-	319	-	40	none	-	-	Average (of DGAC and PCC)	0
10+667	13440	Heavy trucks	-	42	-	40	none	-	-	Average (of DGAC and PCC)	0
10+667	13440	Buses	-	6	-	40	none	-	-	Average (of DGAC and PCC)	0
10+667	13440	Motorcycles	-	6	-	40	none	-	-	Average (of DGAC and PCC)	0
10+667	13440	Auxiliary Vehicle	-	-	-	40	none	-	-	Average (of DGAC and PCC)	0
10+952	*16545*	*Total*	-	*1103*	-	-	*Traffic light*	*0*	-	*Average (of DGAC and PCC)*	*0*

10+952	16545	Automobiles	-	643	-	40	Traffic light	0	-	Average (of DGAC and PCC)	0
10+952	16545	Medium trucks	-	393	-	40	Traffic light	0	-	Average (of DGAC and PCC)	0
10+952	16545	Heavy trucks	-	52	-	40	Traffic light	0	-	Average (of DGAC and PCC)	0
10+952	16545	Buses	-	8	-	40	Traffic light	0	-	Average (of DGAC and PCC)	0
10+952	16545	Motorcycles	-	7	-	40	Traffic light	0	-	Average (of DGAC and PCC)	0
10+952	16545	Auxiliary Vehicle	-	-	-	40	Traffic light	0	-	Average (of DGAC and PCC)	0
11+852	*16545*	*Total*	-	*1103*	-	-	*none*	-	-	*Average (of DGAC and PCC)*	*0*
11+852	16545	Automobiles	-	643	-	40	none	-	-	Average (of DGAC and PCC)	0
11+852	16545	Medium trucks	-	393	-	40	none	-	-	Average (of DGAC and PCC)	0
11+852	16545	Heavy trucks	-	52	-	40	none	-	-	Average (of DGAC and PCC)	0
11+852	16545	Buses	-	8	-	40	none	-	-	Average (of DGAC and PCC)	0
11+852	16545	Motorcycles	-	7	-	40	none	-	-	Average (of DGAC and PCC)	0
11+852	16545	Auxiliary Vehicle	-	-	-	40	none	-	-	Average (of DGAC and PCC)	0
12+309	*16545*	*Total*	-	*1103*	-	-	*none*	-	-	*Average (of DGAC and PCC)*	*0*
12+309	16545	Automobiles	-	643	-	40	none	-	-	Average (of DGAC and PCC)	0
12+309	16545	Medium trucks	-	393	-	40	none	-	-	Average (of DGAC and PCC)	0
12+309	16545	Heavy trucks	-	52	-	40	none	-	-	Average (of DGAC and PCC)	0
12+309	16545	Buses	-	8	-	40	none	-	-	Average (of DGAC and PCC)	0
12+309	16545	Motorcycles	-	7	-	40	none	-	-	Average (of DGAC and PCC)	0
12+309	16545	Auxiliary Vehicle	-	-	-	40	none	-	-	Average (of DGAC and PCC)	0
12+363	*16545*	*Total*	-	*1103*	-	-	*none*	-	-	*Average (of DGAC and PCC)*	*0*
12+363	16545	Automobiles	-	643	-	40	none	-	-	Average (of DGAC and PCC)	0
12+363	16545	Medium trucks	-	393	-	40	none	-	-	Average (of DGAC and PCC)	0
12+363	16545	Heavy trucks	-	52	-	40	none	-	-	Average (of DGAC and PCC)	0
12+363	16545	Buses	-	8	-	40	none	-	-	Average (of DGAC and PCC)	0
12+363	16545	Motorcycles	-	7	-	40	none	-	-	Average (of DGAC and PCC)	0
12+363	16545	Auxiliary Vehicle	-	-	-	40	none	-	-	Average (of DGAC and PCC)	0
12+649	*16545*	*Total*	-	*1103*	-	-	*none*	-	-	*Average (of DGAC and PCC)*	*0*
12+649	16545	Automobiles	-	643	-	40	none	-	-	Average (of DGAC and PCC)	0
12+649	16545	Medium trucks	-	393	-	40	none	-	-	Average (of DGAC and PCC)	0
12+649	16545	Heavy trucks	-	52	-	40	none	-	-	Average (of DGAC and PCC)	0
12+649	16545	Buses	-	8	-	40	none	-	-	Average (of DGAC and PCC)	0
12+649	16545	Motorcycles	-	7	-	40	none	-	-	Average (of DGAC and PCC)	0
12+649	16545	Auxiliary Vehicle	-	-	-	40	none	-	-	Average (of DGAC and PCC)	0
12+807	*16545*	*Total*	-	*1103*	-	-	*none*	-	-	*Average (of DGAC and PCC)*	*0*
12+807	16545	Automobiles	-	643	-	40	none	-	-	Average (of DGAC and PCC)	0
12+807	16545	Medium trucks	-	393	-	40	none	-	-	Average (of DGAC and PCC)	0
12+807	16545	Heavy trucks	-	52	-	40	none	-	-	Average (of DGAC and PCC)	0
12+807	16545	Buses	-	8	-	40	none	-	-	Average (of DGAC and PCC)	0
12+807	16545	Motorcycles	-	7	-	40	none	-	-	Average (of DGAC and PCC)	0
12+807	16545	Auxiliary Vehicle	-	-	-	40	none	-	-	Average (of DGAC and PCC)	0
13+494	*44235*	*Total*	-	*2949*	-	-	*Traffic light*	*0*	-	*Average (of DGAC and PCC)*	*0*
13+494	44235	Automobiles	-	1721	-	40	Traffic light	0	-	Average (of DGAC and PCC)	0
13+494	44235	Medium trucks	-	1051	-	40	Traffic light	0	-	Average (of DGAC and PCC)	0
13+494	44235	Heavy trucks	-	138	-	40	Traffic light	0	-	Average (of DGAC and PCC)	0
13+494	44235	Buses	-	20	-	40	Traffic light	0	-	Average (of DGAC and PCC)	0
13+494	44235	Motorcycles	-	19	-	40	Traffic light	0	-	Average (of DGAC and PCC)	0
13+494	44235	Auxiliary Vehicle	-	-	-	40	Traffic light	0	-	Average (of DGAC and PCC)	0
13+584	*44235*	*Total*	-	*2949*	-	-	*none*	-	-	*Average (of DGAC and PCC)*	*0*
13+584	44235	Automobiles	-	1721	-	40	none	-	-	Average (of DGAC and PCC)	0
13+584	44235	Medium trucks	-	1051	-	40	none	-	-	Average (of DGAC and PCC)	0
13+584	44235	Heavy trucks	-	138	-	40	none	-	-	Average (of DGAC and PCC)	0
13+584	44235	Buses	-	20	-	40	none	-	-	Average (of DGAC and PCC)	0
13+584	44235	Motorcycles	-	19	-	40	none	-	-	Average (of DGAC and PCC)	0
13+584	44235	Auxiliary Vehicle	-	-	-	40	none	-	-	Average (of DGAC and PCC)	0
13+717	*44235*	*Total*	-	*2949*	-	-	*none*	-	-	*Average (of DGAC and PCC)*	*0*
13+717	44235	Automobiles	-	1721	-	40	none	-	-	Average (of DGAC and PCC)	0
13+717	44235	Medium trucks	-	1051	-	40	none	-	-	Average (of DGAC and PCC)	0
13+717	44235	Heavy trucks	-	138	-	40	none	-	-	Average (of DGAC and PCC)	0
13+717	44235	Buses	-	20	-	40	none	-	-	Average (of DGAC and PCC)	0
13+717	44235	Motorcycles	-	19	-	40	none	-	-	Average (of DGAC and PCC)	0
13+717	44235	Auxiliary Vehicle	-	-	-	40	none	-	-	Average (of DGAC and PCC)	0
13+960	-						-	-	-	-	-
0+000	*44235*	*Total*	-	*2949*	-	-	*none*	-	-	*Average (of DGAC and PCC)*	*0*
0+000	44235	Automobiles	-	1721	-	40	none	-	-	Average (of DGAC and PCC)	0
0+000	44235	Medium trucks	-	1051	-	40	none	-	-	Average (of DGAC and PCC)	0
0+000	44235	Heavy trucks	-	138	-	40	none	-	-	Average (of DGAC and PCC)	0
0+000	44235	Buses	-	20	-	40	none	-	-	Average (of DGAC and PCC)	0
0+000	44235	Motorcycles	-	19	-	40	none	-	-	Average (of DGAC and PCC)	0
0+000	44235	Auxiliary Vehicle	-	-	-	40	none	-	-	Average (of DGAC and PCC)	0

Loftus Dr EB	**Traffic direction:**	**In entry direction**										
9+289	*10965*	*Total*	-	*731*	-	-	*Traffic light*	*0*	-	*Average (of DGAC and PCC)*	*0*
9+289	10965	Automobiles	-	426	-		56 Traffic light	0	-	Average (of DGAC and PCC)	0
9+289	10965	Medium trucks	-	260	-		56 Traffic light	0	-	Average (of DGAC and PCC)	0
9+289	10965	Heavy trucks	-	35	-		56 Traffic light	0	-	Average (of DGAC and PCC)	0
9+289	10965	Buses	-	5	-		56 Traffic light	0	-	Average (of DGAC and PCC)	0
9+289	10965	Motorcycles	-	5	-		56 Traffic light	0	-	Average (of DGAC and PCC)	0
9+289	10965	Auxiliary Vehicle	-	-	-		56 Traffic light	0	-	Average (of DGAC and PCC)	0
9+811	*6795*	*Total*	-	*453*	-	-	*Traffic light*	*0*	-	*Average (of DGAC and PCC)*	*0*
9+811	6795	Automobiles	-	264	-		56 Traffic light	0	-	Average (of DGAC and PCC)	0
9+811	6795	Medium trucks	-	161	-		56 Traffic light	0	-	Average (of DGAC and PCC)	0
9+811	6795	Heavy trucks	-	22	-		56 Traffic light	0	-	Average (of DGAC and PCC)	0
9+811	6795	Buses	-	3	-		56 Traffic light	0	-	Average (of DGAC and PCC)	0
9+811	6795	Motorcycles	-	3	-		56 Traffic light	0	-	Average (of DGAC and PCC)	0
9+811	6795	Auxiliary Vehicle	-	-	-		56 Traffic light	0	-	Average (of DGAC and PCC)	0
10+045	-						-	-	-	-	-
0+000	*6795*	*Total*	-	*453*	-	-	*none*	-	-	*Average (of DGAC and PCC)*	*0*
0+000	6795	Automobiles	-	264	-		56 none	-	-	Average (of DGAC and PCC)	0
0+000	6795	Medium trucks	-	161	-		56 none	-	-	Average (of DGAC and PCC)	0
0+000	6795	Heavy trucks	-	22	-		56 none	-	-	Average (of DGAC and PCC)	0
0+000	6795	Buses	-	3	-		56 none	-	-	Average (of DGAC and PCC)	0
0+000	6795	Motorcycles	-	3	-		56 none	-	-	Average (of DGAC and PCC)	0
0+000	6795	Auxiliary Vehicle	-	-	-		56 none	-	-	Average (of DGAC and PCC)	0
Loftus Dr WB	**Traffic direction:**	**In entry direction**									
9+289	*18810*	*Total*	-	*1254*	-	-	*none*	-	-	*Average (of DGAC and PCC)*	*0*
9+289	18810	Automobiles	-	731	-		56 none	-	-	Average (of DGAC and PCC)	0
9+289	18810	Medium trucks	-	447	-		56 none	-	-	Average (of DGAC and PCC)	0
9+289	18810	Heavy trucks	-	59	-		56 none	-	-	Average (of DGAC and PCC)	0
9+289	18810	Buses	-	9	-		56 none	-	-	Average (of DGAC and PCC)	0
9+289	18810	Motorcycles	-	8	-		56 none	-	-	Average (of DGAC and PCC)	0
9+289	18810	Auxiliary Vehicle	-	-	-		56 none	-	-	Average (of DGAC and PCC)	0
9+503	*18810*	*Total*	-	*1254*	-	-	*Traffic light*	*0*	-	*Average (of DGAC and PCC)*	*0*
9+503	18810	Automobiles	-	731	-		56 Traffic light	0	-	Average (of DGAC and PCC)	0
9+503	18810	Medium trucks	-	447	-		56 Traffic light	0	-	Average (of DGAC and PCC)	0
9+503	18810	Heavy trucks	-	59	-		56 Traffic light	0	-	Average (of DGAC and PCC)	0
9+503	18810	Buses	-	9	-		56 Traffic light	0	-	Average (of DGAC and PCC)	0
9+503	18810	Motorcycles	-	8	-		56 Traffic light	0	-	Average (of DGAC and PCC)	0
9+503	18810	Auxiliary Vehicle	-	-	-		56 Traffic light	0	-	Average (of DGAC and PCC)	0
10+045	-						-	-	-	-	-
0+000	*18810*	*Total*	-	*1254*	-	-	*none*	-	-	*Average (of DGAC and PCC)*	*0*
0+000	18810	Automobiles	-	731	-		56 none	-	-	Average (of DGAC and PCC)	0
0+000	18810	Medium trucks	-	447	-		56 none	-	-	Average (of DGAC and PCC)	0
0+000	18810	Heavy trucks	-	59	-		56 none	-	-	Average (of DGAC and PCC)	0
0+000	18810	Buses	-	9	-		56 none	-	-	Average (of DGAC and PCC)	0
0+000	18810	Motorcycles	-	8	-		56 none	-	-	Average (of DGAC and PCC)	0
0+000	18810	Auxiliary Vehicle	-	-	-		56 none	-	-	Average (of DGAC and PCC)	0
Santa Anita Ave SB	**Traffic direction:**	**In entry direction**									
10+304	*41565*	*Total*	-	*2771*	-	-	*none*	-	-	*Average (of DGAC and PCC)*	*0*
10+304	41565	Automobiles	-	1617	-		56 none	-	-	Average (of DGAC and PCC)	0
10+304	41565	Medium trucks	-	987	-		56 none	-	-	Average (of DGAC and PCC)	0
10+304	41565	Heavy trucks	-	130	-		56 none	-	-	Average (of DGAC and PCC)	0
10+304	41565	Buses	-	19	-		56 none	-	-	Average (of DGAC and PCC)	0
10+304	41565	Motorcycles	-	18	-		56 none	-	-	Average (of DGAC and PCC)	0
10+304	41565	Auxiliary Vehicle	-	-	-		56 none	-	-	Average (of DGAC and PCC)	0
10+458	*41565*	*Total*	-	*2771*	-	-	*none*	-	-	*Average (of DGAC and PCC)*	*0*
10+458	41565	Automobiles	-	1617	-		56 none	-	-	Average (of DGAC and PCC)	0
10+458	41565	Medium trucks	-	987	-		56 none	-	-	Average (of DGAC and PCC)	0
10+458	41565	Heavy trucks	-	130	-		56 none	-	-	Average (of DGAC and PCC)	0
10+458	41565	Buses	-	19	-		56 none	-	-	Average (of DGAC and PCC)	0
10+458	41565	Motorcycles	-	18	-		56 none	-	-	Average (of DGAC and PCC)	0
10+458	41565	Auxiliary Vehicle	-	-	-		56 none	-	-	Average (of DGAC and PCC)	0
12+144	*38760*	*Total*	-	*2584*	-	-	*Traffic light*	*0*	-	*Average (of DGAC and PCC)*	*0*
12+144	38760	Automobiles	-	1508	-		56 Traffic light	0	-	Average (of DGAC and PCC)	0
12+144	38760	Medium trucks	-	921	-		56 Traffic light	0	-	Average (of DGAC and PCC)	0
12+144	38760	Heavy trucks	-	121	-		56 Traffic light	0	-	Average (of DGAC and PCC)	0
12+144	38760	Buses	-	18	-		56 Traffic light	0	-	Average (of DGAC and PCC)	0
12+144	38760	Motorcycles	-	16	-		56 Traffic light	0	-	Average (of DGAC and PCC)	0
12+144	38760	Auxiliary Vehicle	-	-	-		56 Traffic light	0	-	Average (of DGAC and PCC)	0
12+291	*38760*	*Total*	-	*2584*	-	-	*Traffic light*	*0*	-	*Average (of DGAC and PCC)*	*0*
12+291	38760	Automobiles	-	1508	-		56 Traffic light	0	-	Average (of DGAC and PCC)	0

12+291	38760	Medium trucks	-	921	-		56	Traffic light	0	-	Average (of DGAC and PCC)		0
12+291	38760	Heavy trucks	-	121	-		56	Traffic light	0	-	Average (of DGAC and PCC)		0
12+291	38760	Buses	-	18	-		56	Traffic light	0	-	Average (of DGAC and PCC)		0
12+291	38760	Motorcycles	-	16	-		56	Traffic light	0	-	Average (of DGAC and PCC)		0
12+291	38760	Auxiliary Vehicle	-	-		-	56	Traffic light	0	-	Average (of DGAC and PCC)		0
12+780	*47385*	*Total*	-	*3159*	-	-		*Traffic light*	*0*	-	*Average (of DGAC and PCC)*		*0*
12+780	47385	Automobiles	-	1844	-		56	Traffic light	0	-	Average (of DGAC and PCC)		0
12+780	47385	Medium trucks	-	1126	-		56	Traffic light	0	-	Average (of DGAC and PCC)		0
12+780	47385	Heavy trucks	-	148	-		56	Traffic light	0	-	Average (of DGAC and PCC)		0
12+780	47385	Buses	-	21	-		56	Traffic light	0	-	Average (of DGAC and PCC)		0
12+780	47385	Motorcycles	-	20	-		56	Traffic light	0	-	Average (of DGAC and PCC)		0
12+780	47385	Auxiliary Vehicle	-	-		-	56	Traffic light	0	-	Average (of DGAC and PCC)		0
14+018	*33210*	*Total*	-	*2214*	-	-		*Traffic light*	*0*	-	*Average (of DGAC and PCC)*		*0*
14+018	33210	Automobiles	-	1292	-		56	Traffic light	0	-	Average (of DGAC and PCC)		0
14+018	33210	Medium trucks	-	789	-		56	Traffic light	0	-	Average (of DGAC and PCC)		0
14+018	33210	Heavy trucks	-	104	-		56	Traffic light	0	-	Average (of DGAC and PCC)		0
14+018	33210	Buses	-	15	-		56	Traffic light	0	-	Average (of DGAC and PCC)		0
14+018	33210	Motorcycles	-	14	-		56	Traffic light	0	-	Average (of DGAC and PCC)		0
14+018	33210	Auxiliary Vehicle	-	-		-	56	Traffic light	0	-	Average (of DGAC and PCC)		0
14+188	*33210*	*Total*	-	*2214*	-	-		*none*	-	-	*Average (of DGAC and PCC)*		*0*
14+188	33210	Automobiles	-	1292	-		56	none	-	-	Average (of DGAC and PCC)		0
14+188	33210	Medium trucks	-	789	-		56	none	-	-	Average (of DGAC and PCC)		0
14+188	33210	Heavy trucks	-	104	-		56	none	-	-	Average (of DGAC and PCC)		0
14+188	33210	Buses	-	15	-		56	none	-	-	Average (of DGAC and PCC)		0
14+188	33210	Motorcycles	-	14	-		56	none	-	-	Average (of DGAC and PCC)		0
14+188	33210	Auxiliary Vehicle	-	-		-	56	none	-	-	Average (of DGAC and PCC)		0
14+491	-							-	-	-	-	-	
Santa Anita Ave NB	**Traffic direction:**	**In entry direction**											
10+304	*38430*	*Total*	-	*2562*	-	-		*none*	-	-	*Average (of DGAC and PCC)*		*0*
10+304	38430	Automobiles	-	1496	-		56	none	-	-	Average (of DGAC and PCC)		0
10+304	38430	Medium trucks	-	913	-		56	none	-	-	Average (of DGAC and PCC)		0
10+304	38430	Heavy trucks	-	120	-		56	none	-	-	Average (of DGAC and PCC)		0
10+304	38430	Buses	-	17	-		56	none	-	-	Average (of DGAC and PCC)		0
10+304	38430	Motorcycles	-	16	-		56	none	-	-	Average (of DGAC and PCC)		0
10+304	38430	Auxiliary Vehicle	-	-		-	56	none	-	-	Average (of DGAC and PCC)		0
10+577	*38430*	*Total*	-	*2562*	-	-		*none*	-	-	*Average (of DGAC and PCC)*		*0*
10+577	38430	Automobiles	-	1496	-		56	none	-	-	Average (of DGAC and PCC)		0
10+577	38430	Medium trucks	-	913	-		56	none	-	-	Average (of DGAC and PCC)		0
10+577	38430	Heavy trucks	-	120	-		56	none	-	-	Average (of DGAC and PCC)		0
10+577	38430	Buses	-	17	-		56	none	-	-	Average (of DGAC and PCC)		0
10+577	38430	Motorcycles	-	16	-		56	none	-	-	Average (of DGAC and PCC)		0
10+577	38430	Auxiliary Vehicle	-	-		-	56	none	-	-	Average (of DGAC and PCC)		0
10+741	*38430*	*Total*	-	*2562*	-	-		*none*	-	-	*Average (of DGAC and PCC)*		*0*
10+741	38430	Automobiles	-	1496	-		56	none	-	-	Average (of DGAC and PCC)		0
10+741	38430	Medium trucks	-	913	-		56	none	-	-	Average (of DGAC and PCC)		0
10+741	38430	Heavy trucks	-	120	-		56	none	-	-	Average (of DGAC and PCC)		0
10+741	38430	Buses	-	17	-		56	none	-	-	Average (of DGAC and PCC)		0
10+741	38430	Motorcycles	-	16	-		56	none	-	-	Average (of DGAC and PCC)		0
10+741	38430	Auxiliary Vehicle	-	-		-	56	none	-	-	Average (of DGAC and PCC)		0
12+002	*42945*	*Total*	-	*2863*	-	-		*Traffic light*	*0*	-	*Average (of DGAC and PCC)*		*0*
12+002	42945	Automobiles	-	1671	-		56	Traffic light	0	-	Average (of DGAC and PCC)		0
12+002	42945	Medium trucks	-	1021	-		56	Traffic light	0	-	Average (of DGAC and PCC)		0
12+002	42945	Heavy trucks	-	134	-		56	Traffic light	0	-	Average (of DGAC and PCC)		0
12+002	42945	Buses	-	19	-		56	Traffic light	0	-	Average (of DGAC and PCC)		0
12+002	42945	Motorcycles	-	18	-		56	Traffic light	0	-	Average (of DGAC and PCC)		0
12+002	42945	Auxiliary Vehicle	-	-		-	56	Traffic light	0	-	Average (of DGAC and PCC)		0
12+148	*42945*	*Total*	-	*2863*	-	-		*none*	-	-	*Average (of DGAC and PCC)*		*0*
12+148	42945	Automobiles	-	1671	-		56	none	-	-	Average (of DGAC and PCC)		0
12+148	42945	Medium trucks	-	1021	-		56	none	-	-	Average (of DGAC and PCC)		0
12+148	42945	Heavy trucks	-	134	-		56	none	-	-	Average (of DGAC and PCC)		0
12+148	42945	Buses	-	19	-		56	none	-	-	Average (of DGAC and PCC)		0
12+148	42945	Motorcycles	-	18	-		56	none	-	-	Average (of DGAC and PCC)		0
12+148	42945	Auxiliary Vehicle	-	-		-	56	none	-	-	Average (of DGAC and PCC)		0
12+285	*42945*	*Total*	-	*2863*	-	-		*none*	-	-	*Average (of DGAC and PCC)*		*0*
12+285	42945	Automobiles	-	1671	-		56	none	-	-	Average (of DGAC and PCC)		0
12+285	42945	Medium trucks	-	1021	-		56	none	-	-	Average (of DGAC and PCC)		0
12+285	42945	Heavy trucks	-	134	-		56	none	-	-	Average (of DGAC and PCC)		0
12+285	42945	Buses	-	19	-		56	none	-	-	Average (of DGAC and PCC)		0
12+285	42945	Motorcycles	-	18	-		56	none	-	-	Average (of DGAC and PCC)		0
12+285	42945	Auxiliary Vehicle	-	-		-	56	none	-	-	Average (of DGAC and PCC)		0

12+478	*42945*	*Total*	-	*2863*	-	-	*none*	-	-	*Average (of DGAC and PCC)*		*0*
12+478	42945	Automobiles	-	1671	-		56 none	-	-	Average (of DGAC and PCC)		0
12+478	42945	Medium trucks	-	1021	-		56 none	-	-	Average (of DGAC and PCC)		0
12+478	42945	Heavy trucks	-	134	-		56 none	-	-	Average (of DGAC and PCC)		0
12+478	42945	Buses	-	19	-		56 none	-	-	Average (of DGAC and PCC)		0
12+478	42945	Motorcycles	-	18	-		56 none	-	-	Average (of DGAC and PCC)		0
12+478	42945	Auxiliary Vehicle	-	-	-		56 none	-	-	Average (of DGAC and PCC)		0
12+627	*37905*	*Total*	-	*2527*	-	-	*Traffic light*	*0*	-	*Average (of DGAC and PCC)*		*0*
12+627	37905	Automobiles	-	1475	-		56 Traffic light	0	-	Average (of DGAC and PCC)		0
12+627	37905	Medium trucks	-	901	-		56 Traffic light	0	-	Average (of DGAC and PCC)		0
12+627	37905	Heavy trucks	-	118	-		56 Traffic light	0	-	Average (of DGAC and PCC)		0
12+627	37905	Buses	-	17	-		56 Traffic light	0	-	Average (of DGAC and PCC)		0
12+627	37905	Motorcycles	-	16	-		56 Traffic light	0	-	Average (of DGAC and PCC)		0
12+627	37905	Auxiliary Vehicle	-	-	-		56 Traffic light	0	-	Average (of DGAC and PCC)		0
13+037	*37905*	*Total*	-	*2527*	-	-	*none*	-	-	*Average (of DGAC and PCC)*		*0*
13+037	37905	Automobiles	-	1475	-		56 none	-	-	Average (of DGAC and PCC)		0
13+037	37905	Medium trucks	-	901	-		56 none	-	-	Average (of DGAC and PCC)		0
13+037	37905	Heavy trucks	-	118	-		56 none	-	-	Average (of DGAC and PCC)		0
13+037	37905	Buses	-	17	-		56 none	-	-	Average (of DGAC and PCC)		0
13+037	37905	Motorcycles	-	16	-		56 none	-	-	Average (of DGAC and PCC)		0
13+037	37905	Auxiliary Vehicle	-	-	-		56 none	-	-	Average (of DGAC and PCC)		0
13+185	*37905*	*Total*	-	*2527*	-	-	*none*	-	-	*Average (of DGAC and PCC)*		*0*
13+185	37905	Automobiles	-	1475	-		56 none	-	-	Average (of DGAC and PCC)		0
13+185	37905	Medium trucks	-	901	-		56 none	-	-	Average (of DGAC and PCC)		0
13+185	37905	Heavy trucks	-	118	-		56 none	-	-	Average (of DGAC and PCC)		0
13+185	37905	Buses	-	17	-		56 none	-	-	Average (of DGAC and PCC)		0
13+185	37905	Motorcycles	-	16	-		56 none	-	-	Average (of DGAC and PCC)		0
13+185	37905	Auxiliary Vehicle	-	-	-		56 none	-	-	Average (of DGAC and PCC)		0
14+121	*37905*	*Total*	-	*2527*	-	-	*none*	-	-	*Average (of DGAC and PCC)*		*0*
14+121	37905	Automobiles	-	1475	-		56 none	-	-	Average (of DGAC and PCC)		0
14+121	37905	Medium trucks	-	901	-		56 none	-	-	Average (of DGAC and PCC)		0
14+121	37905	Heavy trucks	-	118	-		56 none	-	-	Average (of DGAC and PCC)		0
14+121	37905	Buses	-	17	-		56 none	-	-	Average (of DGAC and PCC)		0
14+121	37905	Motorcycles	-	16	-		56 none	-	-	Average (of DGAC and PCC)		0
14+121	37905	Auxiliary Vehicle	-	-	-		56 none	-	-	Average (of DGAC and PCC)		0
14+203	*37905*	*Total*	-	*2527*	-	-	*none*	-	-	*Average (of DGAC and PCC)*		*0*
14+203	37905	Automobiles	-	1475	-		56 none	-	-	Average (of DGAC and PCC)		0
14+203	37905	Medium trucks	-	901	-		56 none	-	-	Average (of DGAC and PCC)		0
14+203	37905	Heavy trucks	-	118	-		56 none	-	-	Average (of DGAC and PCC)		0
14+203	37905	Buses	-	17	-		56 none	-	-	Average (of DGAC and PCC)		0
14+203	37905	Motorcycles	-	16	-		56 none	-	-	Average (of DGAC and PCC)		0
14+203	37905	Auxiliary Vehicle	-	-	-		56 none	-	-	Average (of DGAC and PCC)		0
14+325	*37905*	*Total*	-	*2527*	-	-	*none*	-	-	*Average (of DGAC and PCC)*		*0*
14+325	37905	Automobiles	-	1475	-		56 none	-	-	Average (of DGAC and PCC)		0
14+325	37905	Medium trucks	-	901	-		56 none	-	-	Average (of DGAC and PCC)		0
14+325	37905	Heavy trucks	-	118	-		56 none	-	-	Average (of DGAC and PCC)		0
14+325	37905	Buses	-	17	-		56 none	-	-	Average (of DGAC and PCC)		0
14+325	37905	Motorcycles	-	16	-		56 none	-	-	Average (of DGAC and PCC)		0
14+325	37905	Auxiliary Vehicle	-	-	-		56 none	-	-	Average (of DGAC and PCC)		0
14+463	-						-	-	-	-	-	
0+000	*37905*	*Total*	-	*2527*	-	-	*none*	-	-	*Average (of DGAC and PCC)*		*0*
0+000	37905	Automobiles	-	1475	-		56 none	-	-	Average (of DGAC and PCC)		0
0+000	37905	Medium trucks	-	901	-		56 none	-	-	Average (of DGAC and PCC)		0
0+000	37905	Heavy trucks	-	118	-		56 none	-	-	Average (of DGAC and PCC)		0
0+000	37905	Buses	-	17	-		56 none	-	-	Average (of DGAC and PCC)		0
0+000	37905	Motorcycles	-	16	-		56 none	-	-	Average (of DGAC and PCC)		0
0+000	37905	Auxiliary Vehicle	-	-	-		56 none	-	-	Average (of DGAC and PCC)		0
Valley Mall SB	**Traffic direction:**	**In entry direction**										
10+304	*2055*	*Total*	-	*137*	-	-	*none*	-	-	*Average (of DGAC and PCC)*		*0*
10+304	2055	Automobiles	-	79	-		40 none	-	-	Average (of DGAC and PCC)		0
10+304	2055	Medium trucks	-	49	-		40 none	-	-	Average (of DGAC and PCC)		0
10+304	2055	Heavy trucks	-	7	-		40 none	-	-	Average (of DGAC and PCC)		0
10+304	2055	Buses	-	1	-		40 none	-	-	Average (of DGAC and PCC)		0
10+304	2055	Motorcycles	-	1	-		40 none	-	-	Average (of DGAC and PCC)		0
10+304	2055	Auxiliary Vehicle	-	-	-		40 none	-	-	Average (of DGAC and PCC)		0
10+931	*2055*	*Total*	-	*137*	-	-	*none*	-	-	*Average (of DGAC and PCC)*		*0*
10+931	2055	Automobiles	-	79	-		40 none	-	-	Average (of DGAC and PCC)		0
10+931	2055	Medium trucks	-	49	-		40 none	-	-	Average (of DGAC and PCC)		0
10+931	2055	Heavy trucks	-	7	-		40 none	-	-	Average (of DGAC and PCC)		0
10+931	2055	Buses	-	1	-		40 none	-	-	Average (of DGAC and PCC)		0

10+931	2055	Motorcycles	-	1	-	40	none	-	-	Average (of DGAC and PCC)	0
10+931	2055	Auxiliary Vehicle	-	-	-	40	none	-	-	Average (of DGAC and PCC)	0
11+490	-						-	-	-	-	-
Ramona Blvd EB	**Traffic direction:**	**In entry direction**									
10+304	*13095*	*Total*	-	*873*	-	-	*Traffic light*	*0*	-	*Average (of DGAC and PCC)*	*0*
10+304	13095	Automobiles	-	509	-	56	Traffic light	0	-	Average (of DGAC and PCC)	0
10+304	13095	Medium trucks	-	311	-	56	Traffic light	0	-	Average (of DGAC and PCC)	0
10+304	13095	Heavy trucks	-	41	-	56	Traffic light	0	-	Average (of DGAC and PCC)	0
10+304	13095	Buses	-	6	-	56	Traffic light	0	-	Average (of DGAC and PCC)	0
10+304	13095	Motorcycles	-	6	-	56	Traffic light	0	-	Average (of DGAC and PCC)	0
10+304	13095	Auxiliary Vehicle	-	-	-	56	Traffic light	0	-	Average (of DGAC and PCC)	0
11+003	*14730*	*Total*	-	*982*	-	-	*Traffic light*	*0*	-	*Average (of DGAC and PCC)*	*0*
11+003	14730	Automobiles	-	572	-	56	Traffic light	0	-	Average (of DGAC and PCC)	0
11+003	14730	Medium trucks	-	350	-	56	Traffic light	0	-	Average (of DGAC and PCC)	0
11+003	14730	Heavy trucks	-	46	-	56	Traffic light	0	-	Average (of DGAC and PCC)	0
11+003	14730	Buses	-	7	-	56	Traffic light	0	-	Average (of DGAC and PCC)	0
11+003	14730	Motorcycles	-	7	-	56	Traffic light	0	-	Average (of DGAC and PCC)	0
11+003	14730	Auxiliary Vehicle	-	-	-	56	Traffic light	0	-	Average (of DGAC and PCC)	0
11+209	*14730*	*Total*	-	*982*	-	-	*none*	-	-	*Average (of DGAC and PCC)*	*0*
11+209	14730	Automobiles	-	572	-	56	none	-	-	Average (of DGAC and PCC)	0
11+209	14730	Medium trucks	-	350	-	56	none	-	-	Average (of DGAC and PCC)	0
11+209	14730	Heavy trucks	-	46	-	56	none	-	-	Average (of DGAC and PCC)	0
11+209	14730	Buses	-	7	-	56	none	-	-	Average (of DGAC and PCC)	0
11+209	14730	Motorcycles	-	7	-	56	none	-	-	Average (of DGAC and PCC)	0
11+209	14730	Auxiliary Vehicle	-	-	-	56	none	-	-	Average (of DGAC and PCC)	0
11+417	*20880*	*Total*	-	*1392*	-	-	*Traffic light*	*0*	-	*Average (of DGAC and PCC)*	*0*
11+417	20880	Automobiles	-	812	-	56	Traffic light	0	-	Average (of DGAC and PCC)	0
11+417	20880	Medium trucks	-	496	-	56	Traffic light	0	-	Average (of DGAC and PCC)	0
11+417	20880	Heavy trucks	-	65	-	56	Traffic light	0	-	Average (of DGAC and PCC)	0
11+417	20880	Buses	-	10	-	56	Traffic light	0	-	Average (of DGAC and PCC)	0
11+417	20880	Motorcycles	-	9	-	56	Traffic light	0	-	Average (of DGAC and PCC)	0
11+417	20880	Auxiliary Vehicle	-	-	-	56	Traffic light	0	-	Average (of DGAC and PCC)	0
11+683	*20880*	*Total*	-	*1392*	-	-	*none*	-	-	*Average (of DGAC and PCC)*	*0*
11+683	20880	Automobiles	-	812	-	56	none	-	-	Average (of DGAC and PCC)	0
11+683	20880	Medium trucks	-	496	-	56	none	-	-	Average (of DGAC and PCC)	0
11+683	20880	Heavy trucks	-	65	-	56	none	-	-	Average (of DGAC and PCC)	0
11+683	20880	Buses	-	10	-	56	none	-	-	Average (of DGAC and PCC)	0
11+683	20880	Motorcycles	-	9	-	56	none	-	-	Average (of DGAC and PCC)	0
11+683	20880	Auxiliary Vehicle	-	-	-	56	none	-	-	Average (of DGAC and PCC)	0
12+563	*31050*	*Total*	-	*2070*	-	-	*Traffic light*	*0*	-	*Average (of DGAC and PCC)*	*0*
12+563	31050	Automobiles	-	1208	-	56	Traffic light	0	-	Average (of DGAC and PCC)	0
12+563	31050	Medium trucks	-	738	-	56	Traffic light	0	-	Average (of DGAC and PCC)	0
12+563	31050	Heavy trucks	-	97	-	56	Traffic light	0	-	Average (of DGAC and PCC)	0
12+563	31050	Buses	-	14	-	56	Traffic light	0	-	Average (of DGAC and PCC)	0
12+563	31050	Motorcycles	-	13	-	56	Traffic light	0	-	Average (of DGAC and PCC)	0
12+563	31050	Auxiliary Vehicle	-	-	-	56	Traffic light	0	-	Average (of DGAC and PCC)	0
14+595	*33855*	*Total*	-	*2257*	-	-	*Traffic light*	*0*	-	*Average (of DGAC and PCC)*	*0*
14+595	33855	Automobiles	-	1317	-	56	Traffic light	0	-	Average (of DGAC and PCC)	0
14+595	33855	Medium trucks	-	805	-	56	Traffic light	0	-	Average (of DGAC and PCC)	0
14+595	33855	Heavy trucks	-	106	-	56	Traffic light	0	-	Average (of DGAC and PCC)	0
14+595	33855	Buses	-	15	-	56	Traffic light	0	-	Average (of DGAC and PCC)	0
14+595	33855	Motorcycles	-	14	-	56	Traffic light	0	-	Average (of DGAC and PCC)	0
14+595	33855	Auxiliary Vehicle	-	-	-	56	Traffic light	0	-	Average (of DGAC and PCC)	0
15+120	*33495*	*Total*	-	*2233*	-	-	*Traffic light*	*0*	-	*Average (of DGAC and PCC)*	*0*
15+120	33495	Automobiles	-	1303	-	56	Traffic light	0	-	Average (of DGAC and PCC)	0
15+120	33495	Medium trucks	-	796	-	56	Traffic light	0	-	Average (of DGAC and PCC)	0
15+120	33495	Heavy trucks	-	105	-	56	Traffic light	0	-	Average (of DGAC and PCC)	0
15+120	33495	Buses	-	15	-	56	Traffic light	0	-	Average (of DGAC and PCC)	0
15+120	33495	Motorcycles	-	14	-	56	Traffic light	0	-	Average (of DGAC and PCC)	0
15+120	33495	Auxiliary Vehicle	-	-	-	56	Traffic light	0	-	Average (of DGAC and PCC)	0
15+353	-						-	-	-	-	-
0+000	*33495*	*Total*	-	*2233*	-	-	*Traffic light*	*0*	-	*Average (of DGAC and PCC)*	*0*
0+000	33495	Automobiles	-	1303	-	56	Traffic light	0	-	Average (of DGAC and PCC)	0
0+000	33495	Medium trucks	-	796	-	56	Traffic light	0	-	Average (of DGAC and PCC)	0
0+000	33495	Heavy trucks	-	105	-	56	Traffic light	0	-	Average (of DGAC and PCC)	0
0+000	33495	Buses	-	15	-	56	Traffic light	0	-	Average (of DGAC and PCC)	0
0+000	33495	Motorcycles	-	14	-	56	Traffic light	0	-	Average (of DGAC and PCC)	0
0+000	33495	Auxiliary Vehicle	-	-	-	56	Traffic light	0	-	Average (of DGAC and PCC)	0
Ramona Blvd WB	**Traffic direction:**	**In entry direction**									
10+304	*31965*	*Total*	-	*2131*	-	-	*none*	-	-	*Average (of DGAC and PCC)*	*0*

10+304	31965	Automobiles	-	1243	-	56	none	-	-	Average (of DGAC and PCC)	0
10+304	31965	Medium trucks	-	759	-	56	none	-	-	Average (of DGAC and PCC)	0
10+304	31965	Heavy trucks	-	100	-	56	none	-	-	Average (of DGAC and PCC)	0
10+304	31965	Buses	-	15	-	56	none	-	-	Average (of DGAC and PCC)	0
10+304	31965	Motorcycles	-	14	-	56	none	-	-	Average (of DGAC and PCC)	0
10+304	31965	Auxiliary Vehicle	-	-	-	56	none	-	-	Average (of DGAC and PCC)	0
10+516	*31965*	*Total*	-	*2131*	-	-	*Traffic light*	*0*	-	*Average (of DGAC and PCC)*	*0*
10+516	31965	Automobiles	-	1243	-	56	Traffic light	0	-	Average (of DGAC and PCC)	0
10+516	31965	Medium trucks	-	759	-	56	Traffic light	0	-	Average (of DGAC and PCC)	0
10+516	31965	Heavy trucks	-	100	-	56	Traffic light	0	-	Average (of DGAC and PCC)	0
10+516	31965	Buses	-	15	-	56	Traffic light	0	-	Average (of DGAC and PCC)	0
10+516	31965	Motorcycles	-	14	-	56	Traffic light	0	-	Average (of DGAC and PCC)	0
10+516	31965	Auxiliary Vehicle	-	-	-	56	Traffic light	0	-	Average (of DGAC and PCC)	0
11+050	*30780*	*Total*	-	*2052*	-	-	*Traffic light*	*0*	-	*Average (of DGAC and PCC)*	*0*
11+050	30780	Automobiles	-	1198	-	56	Traffic light	0	-	Average (of DGAC and PCC)	0
11+050	30780	Medium trucks	-	731	-	56	Traffic light	0	-	Average (of DGAC and PCC)	0
11+050	30780	Heavy trucks	-	96	-	56	Traffic light	0	-	Average (of DGAC and PCC)	0
11+050	30780	Buses	-	14	-	56	Traffic light	0	-	Average (of DGAC and PCC)	0
11+050	30780	Motorcycles	-	13	-	56	Traffic light	0	-	Average (of DGAC and PCC)	0
11+050	30780	Auxiliary Vehicle	-	-	-	56	Traffic light	0	-	Average (of DGAC and PCC)	0
13+093	*25380*	*Total*	-	*1692*	-	-	*Traffic light*	*0*	-	*Average (of DGAC and PCC)*	*0*
13+093	25380	Automobiles	-	987	-	56	Traffic light	0	-	Average (of DGAC and PCC)	0
13+093	25380	Medium trucks	-	603	-	56	Traffic light	0	-	Average (of DGAC and PCC)	0
13+093	25380	Heavy trucks	-	79	-	56	Traffic light	0	-	Average (of DGAC and PCC)	0
13+093	25380	Buses	-	12	-	56	Traffic light	0	-	Average (of DGAC and PCC)	0
13+093	25380	Motorcycles	-	11	-	56	Traffic light	0	-	Average (of DGAC and PCC)	0
13+093	25380	Auxiliary Vehicle	-	-	-	56	Traffic light	0	-	Average (of DGAC and PCC)	0
13+951	*25380*	*Total*	-	*1692*	-	-	*none*	-	-	*Average (of DGAC and PCC)*	*0*
13+951	25380	Automobiles	-	987	-	56	none	-	-	Average (of DGAC and PCC)	0
13+951	25380	Medium trucks	-	603	-	56	none	-	-	Average (of DGAC and PCC)	0
13+951	25380	Heavy trucks	-	79	-	56	none	-	-	Average (of DGAC and PCC)	0
13+951	25380	Buses	-	12	-	56	none	-	-	Average (of DGAC and PCC)	0
13+951	25380	Motorcycles	-	11	-	56	none	-	-	Average (of DGAC and PCC)	0
13+951	25380	Auxiliary Vehicle	-	-	-	56	none	-	-	Average (of DGAC and PCC)	0
14+222	*15705*	*Total*	-	*1047*	-	-	*Traffic light*	*0*	-	*Average (of DGAC and PCC)*	*0*
14+222	15705	Automobiles	-	611	-	56	Traffic light	0	-	Average (of DGAC and PCC)	0
14+222	15705	Medium trucks	-	373	-	56	Traffic light	0	-	Average (of DGAC and PCC)	0
14+222	15705	Heavy trucks	-	49	-	56	Traffic light	0	-	Average (of DGAC and PCC)	0
14+222	15705	Buses	-	7	-	56	Traffic light	0	-	Average (of DGAC and PCC)	0
14+222	15705	Motorcycles	-	7	-	56	Traffic light	0	-	Average (of DGAC and PCC)	0
14+222	15705	Auxiliary Vehicle	-	-	-	56	Traffic light	0	-	Average (of DGAC and PCC)	0
14+437	*15705*	*Total*	-	*1047*	-	-	*none*	-	-	*Average (of DGAC and PCC)*	*0*
14+437	15705	Automobiles	-	611	-	56	none	-	-	Average (of DGAC and PCC)	0
14+437	15705	Medium trucks	-	373	-	56	none	-	-	Average (of DGAC and PCC)	0
14+437	15705	Heavy trucks	-	49	-	56	none	-	-	Average (of DGAC and PCC)	0
14+437	15705	Buses	-	7	-	56	none	-	-	Average (of DGAC and PCC)	0
14+437	15705	Motorcycles	-	7	-	56	none	-	-	Average (of DGAC and PCC)	0
14+437	15705	Auxiliary Vehicle	-	-	-	56	none	-	-	Average (of DGAC and PCC)	0
14+633	*15000*	*Total*	-	*1000*	-	-	*Traffic light*	*0*	-	*Average (of DGAC and PCC)*	*0*
14+633	15000	Automobiles	-	583	-	56	Traffic light	0	-	Average (of DGAC and PCC)	0
14+633	15000	Medium trucks	-	356	-	56	Traffic light	0	-	Average (of DGAC and PCC)	0
14+633	15000	Heavy trucks	-	47	-	56	Traffic light	0	-	Average (of DGAC and PCC)	0
14+633	15000	Buses	-	7	-	56	Traffic light	0	-	Average (of DGAC and PCC)	0
14+633	15000	Motorcycles	-	7	-	56	Traffic light	0	-	Average (of DGAC and PCC)	0
14+633	15000	Auxiliary Vehicle	-	-	-	56	Traffic light	0	-	Average (of DGAC and PCC)	0
15+348	-						-	-	-	-	-
0+000	*15945*	*Total*	-	*1063*	-	-	*Traffic light*	*0*	-	*Average (of DGAC and PCC)*	*0*
0+000	15945	Automobiles	-	620	-	56	Traffic light	0	-	Average (of DGAC and PCC)	0
0+000	15945	Medium trucks	-	379	-	56	Traffic light	0	-	Average (of DGAC and PCC)	0
0+000	15945	Heavy trucks	-	50	-	56	Traffic light	0	-	Average (of DGAC and PCC)	0
0+000	15945	Buses	-	7	-	56	Traffic light	0	-	Average (of DGAC and PCC)	0
0+000	15945	Motorcycles	-	7	-	56	Traffic light	0	-	Average (of DGAC and PCC)	0
0+000	15945	Auxiliary Vehicle	-	-	-	56	Traffic light	0	-	Average (of DGAC and PCC)	0
Peck Rd SB	**Traffic direction:**	**In entry direction**									
10+304	*37290*	*Total*	-	*2486*	-	-	*none*	-	-	*Average (of DGAC and PCC)*	*0*
10+304	37290	Automobiles	-	1451	-	56	none	-	-	Average (of DGAC and PCC)	0
10+304	37290	Medium trucks	-	886	-	56	none	-	-	Average (of DGAC and PCC)	0
10+304	37290	Heavy trucks	-	116	-	56	none	-	-	Average (of DGAC and PCC)	0
10+304	37290	Buses	-	17	-	56	none	-	-	Average (of DGAC and PCC)	0
10+304	37290	Motorcycles	-	16	-	56	none	-	-	Average (of DGAC and PCC)	0

10+304	37290	Auxiliary Vehicle	-	-	-	56	none	-	-	Average (of DGAC and PCC)	0
10+796	*37290*	*Total*	-	*2486*	-	-	*Traffic light*	*0*	-	*Average (of DGAC and PCC)*	*0*
10+796	37290	Automobiles	-	1451	-	56	Traffic light	0	-	Average (of DGAC and PCC)	0
10+796	37290	Medium trucks	-	886	-	56	Traffic light	0	-	Average (of DGAC and PCC)	0
10+796	37290	Heavy trucks	-	116	-	56	Traffic light	0	-	Average (of DGAC and PCC)	0
10+796	37290	Buses	-	17	-	56	Traffic light	0	-	Average (of DGAC and PCC)	0
10+796	37290	Motorcycles	-	16	-	56	Traffic light	0	-	Average (of DGAC and PCC)	0
10+796	37290	Auxiliary Vehicle	-	-	-	56	Traffic light	0	-	Average (of DGAC and PCC)	0
13+264	*42135*	*Total*	-	*2809*	-	-	*Traffic light*	*0*	-	*Average (of DGAC and PCC)*	*0*
13+264	42135	Automobiles	-	1640	-	56	Traffic light	0	-	Average (of DGAC and PCC)	0
13+264	42135	Medium trucks	-	1001	-	56	Traffic light	0	-	Average (of DGAC and PCC)	0
13+264	42135	Heavy trucks	-	131	-	56	Traffic light	0	-	Average (of DGAC and PCC)	0
13+264	42135	Buses	-	19	-	56	Traffic light	0	-	Average (of DGAC and PCC)	0
13+264	42135	Motorcycles	-	18	-	56	Traffic light	0	-	Average (of DGAC and PCC)	0
13+264	42135	Auxiliary Vehicle	-	-	-	56	Traffic light	0	-	Average (of DGAC and PCC)	0
13+395	*42135*	*Total*	-	*2809*	-	-	*none*	-	-	*Average (of DGAC and PCC)*	*0*
13+395	42135	Automobiles	-	1640	-	56	none	-	-	Average (of DGAC and PCC)	0
13+395	42135	Medium trucks	-	1001	-	56	none	-	-	Average (of DGAC and PCC)	0
13+395	42135	Heavy trucks	-	131	-	56	none	-	-	Average (of DGAC and PCC)	0
13+395	42135	Buses	-	19	-	56	none	-	-	Average (of DGAC and PCC)	0
13+395	42135	Motorcycles	-	18	-	56	none	-	-	Average (of DGAC and PCC)	0
13+395	42135	Auxiliary Vehicle	-	-	-	56	none	-	-	Average (of DGAC and PCC)	0
13+528	*42135*	*Total*	-	*2809*	-	-	*none*	-	-	*Average (of DGAC and PCC)*	*0*
13+528	42135	Automobiles	-	1640	-	56	none	-	-	Average (of DGAC and PCC)	0
13+528	42135	Medium trucks	-	1001	-	56	none	-	-	Average (of DGAC and PCC)	0
13+528	42135	Heavy trucks	-	131	-	56	none	-	-	Average (of DGAC and PCC)	0
13+528	42135	Buses	-	19	-	56	none	-	-	Average (of DGAC and PCC)	0
13+528	42135	Motorcycles	-	18	-	56	none	-	-	Average (of DGAC and PCC)	0
13+528	42135	Auxiliary Vehicle	-	-	-	56	none	-	-	Average (of DGAC and PCC)	0
14+172	*47685*	*Total*	-	*3179*	-	-	*Traffic light*	*0*	-	*Average (of DGAC and PCC)*	*0*
14+172	47685	Automobiles	-	1856	-	56	Traffic light	0	-	Average (of DGAC and PCC)	0
14+172	47685	Medium trucks	-	1133	-	56	Traffic light	0	-	Average (of DGAC and PCC)	0
14+172	47685	Heavy trucks	-	149	-	56	Traffic light	0	-	Average (of DGAC and PCC)	0
14+172	47685	Buses	-	21	-	56	Traffic light	0	-	Average (of DGAC and PCC)	0
14+172	47685	Motorcycles	-	20	-	56	Traffic light	0	-	Average (of DGAC and PCC)	0
14+172	47685	Auxiliary Vehicle	-	-	-	56	Traffic light	0	-	Average (of DGAC and PCC)	0
14+486	*47685*	*Total*	-	*3179*	-	-	*none*	-	-	*Average (of DGAC and PCC)*	*0*
14+486	47685	Automobiles	-	1856	-	56	none	-	-	Average (of DGAC and PCC)	0
14+486	47685	Medium trucks	-	1133	-	56	none	-	-	Average (of DGAC and PCC)	0
14+486	47685	Heavy trucks	-	149	-	56	none	-	-	Average (of DGAC and PCC)	0
14+486	47685	Buses	-	21	-	56	none	-	-	Average (of DGAC and PCC)	0
14+486	47685	Motorcycles	-	20	-	56	none	-	-	Average (of DGAC and PCC)	0
14+486	47685	Auxiliary Vehicle	-	-	-	56	none	-	-	Average (of DGAC and PCC)	0
14+669	*47685*	*Total*	-	*3179*	-	-	*none*	-	-	*Average (of DGAC and PCC)*	*0*
14+669	47685	Automobiles	-	1856	-	56	none	-	-	Average (of DGAC and PCC)	0
14+669	47685	Medium trucks	-	1133	-	56	none	-	-	Average (of DGAC and PCC)	0
14+669	47685	Heavy trucks	-	149	-	56	none	-	-	Average (of DGAC and PCC)	0
14+669	47685	Buses	-	21	-	56	none	-	-	Average (of DGAC and PCC)	0
14+669	47685	Motorcycles	-	20	-	56	none	-	-	Average (of DGAC and PCC)	0
14+669	47685	Auxiliary Vehicle	-	-	-	56	none	-	-	Average (of DGAC and PCC)	0
14+834	*47685*	*Total*	-	*3179*	-	-	*none*	-	-	*Average (of DGAC and PCC)*	*0*
14+834	47685	Automobiles	-	1856	-	56	none	-	-	Average (of DGAC and PCC)	0
14+834	47685	Medium trucks	-	1133	-	56	none	-	-	Average (of DGAC and PCC)	0
14+834	47685	Heavy trucks	-	149	-	56	none	-	-	Average (of DGAC and PCC)	0
14+834	47685	Buses	-	21	-	56	none	-	-	Average (of DGAC and PCC)	0
14+834	47685	Motorcycles	-	20	-	56	none	-	-	Average (of DGAC and PCC)	0
14+834	47685	Auxiliary Vehicle	-	-	-	56	none	-	-	Average (of DGAC and PCC)	0
15+091	*26070*	*Total*	-	*1738*	-	-	*Traffic light*	*0*	-	*Average (of DGAC and PCC)*	*0*
15+091	26070	Automobiles	-	1014	-	56	Traffic light	0	-	Average (of DGAC and PCC)	0
15+091	26070	Medium trucks	-	620	-	56	Traffic light	0	-	Average (of DGAC and PCC)	0
15+091	26070	Heavy trucks	-	81	-	56	Traffic light	0	-	Average (of DGAC and PCC)	0
15+091	26070	Buses	-	12	-	56	Traffic light	0	-	Average (of DGAC and PCC)	0
15+091	26070	Motorcycles	-	11	-	56	Traffic light	0	-	Average (of DGAC and PCC)	0
15+091	26070	Auxiliary Vehicle	-	-	-	56	Traffic light	0	-	Average (of DGAC and PCC)	0
15+669	-						-	-	-	-	-
0+000	*26070*	*Total*	-	*1738*	-	-	*none*	-	-	*Average (of DGAC and PCC)*	*0*
0+000	26070	Automobiles	-	1014	-	56	none	-	-	Average (of DGAC and PCC)	0
0+000	26070	Medium trucks	-	620	-	56	none	-	-	Average (of DGAC and PCC)	0
0+000	26070	Heavy trucks	-	81	-	56	none	-	-	Average (of DGAC and PCC)	0
0+000	26070	Buses	-	12	-	56	none	-	-	Average (of DGAC and PCC)	0

0+000	26070	Motorcycles	-	11	-	56	none	-	-	Average (of DGAC and PCC)	0
0+000	26070	Auxiliary Vehicle	-	-	-	56	none	-	-	Average (of DGAC and PCC)	0
Peck Rd NB	**Traffic direction:**	**In entry direction**									
10+304	*32325*	*Total*	-	*2155*	-	-	*none*	-	-	*Average (of DGAC and PCC)*	*0*
10+304	32325	Automobiles	-	1257	-	56	none	-	-	Average (of DGAC and PCC)	0
10+304	32325	Medium trucks	-	768	-	56	none	-	-	Average (of DGAC and PCC)	0
10+304	32325	Heavy trucks	-	101	-	56	none	-	-	Average (of DGAC and PCC)	0
10+304	32325	Buses	-	15	-	56	none	-	-	Average (of DGAC and PCC)	0
10+304	32325	Motorcycles	-	14	-	56	none	-	-	Average (of DGAC and PCC)	0
10+304	32325	Auxiliary Vehicle	-	-	-	56	none	-	-	Average (of DGAC and PCC)	0
10+866	*32325*	*Total*	-	*2155*	-	-	*Traffic light*	*0*	-	*Average (of DGAC and PCC)*	*0*
10+866	32325	Automobiles	-	1257	-	56	Traffic light	0	-	Average (of DGAC and PCC)	0
10+866	32325	Medium trucks	-	768	-	56	Traffic light	0	-	Average (of DGAC and PCC)	0
10+866	32325	Heavy trucks	-	101	-	56	Traffic light	0	-	Average (of DGAC and PCC)	0
10+866	32325	Buses	-	15	-	56	Traffic light	0	-	Average (of DGAC and PCC)	0
10+866	32325	Motorcycles	-	14	-	56	Traffic light	0	-	Average (of DGAC and PCC)	0
10+866	32325	Auxiliary Vehicle	-	-	-	56	Traffic light	0	-	Average (of DGAC and PCC)	0
11+164	*32325*	*Total*	-	*2155*	-	-	*none*	-	-	*Average (of DGAC and PCC)*	*0*
11+164	32325	Automobiles	-	1257	-	56	none	-	-	Average (of DGAC and PCC)	0
11+164	32325	Medium trucks	-	768	-	56	none	-	-	Average (of DGAC and PCC)	0
11+164	32325	Heavy trucks	-	101	-	56	none	-	-	Average (of DGAC and PCC)	0
11+164	32325	Buses	-	15	-	56	none	-	-	Average (of DGAC and PCC)	0
11+164	32325	Motorcycles	-	14	-	56	none	-	-	Average (of DGAC and PCC)	0
11+164	32325	Auxiliary Vehicle	-	-	-	56	none	-	-	Average (of DGAC and PCC)	0
11+298	*32325*	*Total*	-	*2155*	-	-	*none*	-	-	*Average (of DGAC and PCC)*	*0*
11+298	32325	Automobiles	-	1257	-	56	none	-	-	Average (of DGAC and PCC)	0
11+298	32325	Medium trucks	-	768	-	56	none	-	-	Average (of DGAC and PCC)	0
11+298	32325	Heavy trucks	-	101	-	56	none	-	-	Average (of DGAC and PCC)	0
11+298	32325	Buses	-	15	-	56	none	-	-	Average (of DGAC and PCC)	0
11+298	32325	Motorcycles	-	14	-	56	none	-	-	Average (of DGAC and PCC)	0
11+298	32325	Auxiliary Vehicle	-	-	-	56	none	-	-	Average (of DGAC and PCC)	0
11+487	*32325*	*Total*	-	*2155*	-	-	*none*	-	-	*Average (of DGAC and PCC)*	*0*
11+487	32325	Automobiles	-	1257	-	56	none	-	-	Average (of DGAC and PCC)	0
11+487	32325	Medium trucks	-	768	-	56	none	-	-	Average (of DGAC and PCC)	0
11+487	32325	Heavy trucks	-	101	-	56	none	-	-	Average (of DGAC and PCC)	0
11+487	32325	Buses	-	15	-	56	none	-	-	Average (of DGAC and PCC)	0
11+487	32325	Motorcycles	-	14	-	56	none	-	-	Average (of DGAC and PCC)	0
11+487	32325	Auxiliary Vehicle	-	-	-	56	none	-	-	Average (of DGAC and PCC)	0
11+756	*48960*	*Total*	-	*3264*	-	-	*Traffic light*	*0*	-	*Average (of DGAC and PCC)*	*0*
11+756	48960	Automobiles	-	1905	-	56	Traffic light	0	-	Average (of DGAC and PCC)	0
11+756	48960	Medium trucks	-	1163	-	56	Traffic light	0	-	Average (of DGAC and PCC)	0
11+756	48960	Heavy trucks	-	153	-	56	Traffic light	0	-	Average (of DGAC and PCC)	0
11+756	48960	Buses	-	22	-	56	Traffic light	0	-	Average (of DGAC and PCC)	0
11+756	48960	Motorcycles	-	21	-	56	Traffic light	0	-	Average (of DGAC and PCC)	0
11+756	48960	Auxiliary Vehicle	-	-	-	56	Traffic light	0	-	Average (of DGAC and PCC)	0
12+431	*48960*	*Total*	-	*3264*	-	-	*none*	-	-	*Average (of DGAC and PCC)*	*0*
12+431	48960	Automobiles	-	1905	-	56	none	-	-	Average (of DGAC and PCC)	0
12+431	48960	Medium trucks	-	1163	-	56	none	-	-	Average (of DGAC and PCC)	0
12+431	48960	Heavy trucks	-	153	-	56	none	-	-	Average (of DGAC and PCC)	0
12+431	48960	Buses	-	22	-	56	none	-	-	Average (of DGAC and PCC)	0
12+431	48960	Motorcycles	-	21	-	56	none	-	-	Average (of DGAC and PCC)	0
12+431	48960	Auxiliary Vehicle	-	-	-	56	none	-	-	Average (of DGAC and PCC)	0
12+568	*48960*	*Total*	-	*3264*	-	-	*none*	-	-	*Average (of DGAC and PCC)*	*0*
12+568	48960	Automobiles	-	1905	-	56	none	-	-	Average (of DGAC and PCC)	0
12+568	48960	Medium trucks	-	1163	-	56	none	-	-	Average (of DGAC and PCC)	0
12+568	48960	Heavy trucks	-	153	-	56	none	-	-	Average (of DGAC and PCC)	0
12+568	48960	Buses	-	22	-	56	none	-	-	Average (of DGAC and PCC)	0
12+568	48960	Motorcycles	-	21	-	56	none	-	-	Average (of DGAC and PCC)	0
12+568	48960	Auxiliary Vehicle	-	-	-	56	none	-	-	Average (of DGAC and PCC)	0
12+697	*46620*	*Total*	-	*3108*	-	-	*Traffic light*	*0*	-	*Average (of DGAC and PCC)*	*0*
12+697	46620	Automobiles	-	1814	-	56	Traffic light	0	-	Average (of DGAC and PCC)	0
12+697	46620	Medium trucks	-	1108	-	56	Traffic light	0	-	Average (of DGAC and PCC)	0
12+697	46620	Heavy trucks	-	145	-	56	Traffic light	0	-	Average (of DGAC and PCC)	0
12+697	46620	Buses	-	21	-	56	Traffic light	0	-	Average (of DGAC and PCC)	0
12+697	46620	Motorcycles	-	20	-	56	Traffic light	0	-	Average (of DGAC and PCC)	0
12+697	46620	Auxiliary Vehicle	-	-	-	56	Traffic light	0	-	Average (of DGAC and PCC)	0
15+162	*34455*	*Total*	-	*2297*	-	-	*Traffic light*	*0*	-	*Average (of DGAC and PCC)*	*0*
15+162	34455	Automobiles	-	1340	-	56	Traffic light	0	-	Average (of DGAC and PCC)	0
15+162	34455	Medium trucks	-	818	-	56	Traffic light	0	-	Average (of DGAC and PCC)	0
15+162	34455	Heavy trucks	-	108	-	56	Traffic light	0	-	Average (of DGAC and PCC)	0

15+162	34455	Buses	-	16	-	56	Traffic light	0	-	Average (of DGAC and PCC)	0
15+162	34455	Motorcycles	-	15	-	56	Traffic light	0	-	Average (of DGAC and PCC)	0
15+162	34455	Auxiliary Vehicle	-	-	-	56	Traffic light	0	-	Average (of DGAC and PCC)	0
15+669	-						-	-	-	-	-
0+000	*34455*	*Total*	-	*2297*	-	-	*none*	-	-	*Average (of DGAC and PCC)*	*0*
0+000	34455	Automobiles	-	1340	-	56	none	-	-	Average (of DGAC and PCC)	0
0+000	34455	Medium trucks	-	818	-	56	none	-	-	Average (of DGAC and PCC)	0
0+000	34455	Heavy trucks	-	108	-	56	none	-	-	Average (of DGAC and PCC)	0
0+000	34455	Buses	-	16	-	56	none	-	-	Average (of DGAC and PCC)	0
0+000	34455	Motorcycles	-	15	-	56	none	-	-	Average (of DGAC and PCC)	0
0+000	34455	Auxiliary Vehicle	-	-	-	56	none	-	-	Average (of DGAC and PCC)	0
Roseglen St SB	**Traffic direction: In entry direction**										
10+304	*1845*	*Total*	-	*123*	-	-	*none*	-	-	*Average (of DGAC and PCC)*	*0*
10+304	1845	Automobiles	-	71	-	48	none	-	-	Average (of DGAC and PCC)	0
10+304	1845	Medium trucks	-	44	-	48	none	-	-	Average (of DGAC and PCC)	0
10+304	1845	Heavy trucks	-	6	-	48	none	-	-	Average (of DGAC and PCC)	0
10+304	1845	Buses	-	1	-	48	none	-	-	Average (of DGAC and PCC)	0
10+304	1845	Motorcycles	-	1	-	48	none	-	-	Average (of DGAC and PCC)	0
10+304	1845	Auxiliary Vehicle	-	-	-	48	none	-	-	Average (of DGAC and PCC)	0
10+862	*1845*	*Total*	-	*123*	-	-	*none*	-	-	*Average (of DGAC and PCC)*	*0*
10+862	1845	Automobiles	-	71	-	48	none	-	-	Average (of DGAC and PCC)	0
10+862	1845	Medium trucks	-	44	-	48	none	-	-	Average (of DGAC and PCC)	0
10+862	1845	Heavy trucks	-	6	-	48	none	-	-	Average (of DGAC and PCC)	0
10+862	1845	Buses	-	1	-	48	none	-	-	Average (of DGAC and PCC)	0
10+862	1845	Motorcycles	-	1	-	48	none	-	-	Average (of DGAC and PCC)	0
10+862	1845	Auxiliary Vehicle	-	-	-	48	none	-	-	Average (of DGAC and PCC)	0
10+926	*1845*	*Total*	-	*123*	-	-	*none*	-	-	*Average (of DGAC and PCC)*	*0*
10+926	1845	Automobiles	-	71	-	48	none	-	-	Average (of DGAC and PCC)	0
10+926	1845	Medium trucks	-	44	-	48	none	-	-	Average (of DGAC and PCC)	0
10+926	1845	Heavy trucks	-	6	-	48	none	-	-	Average (of DGAC and PCC)	0
10+926	1845	Buses	-	1	-	48	none	-	-	Average (of DGAC and PCC)	0
10+926	1845	Motorcycles	-	1	-	48	none	-	-	Average (of DGAC and PCC)	0
10+926	1845	Auxiliary Vehicle	-	-	-	48	none	-	-	Average (of DGAC and PCC)	0
11+048	-						-	-	-	-	-
0+000	*1845*	*Total*	-	*123*	-	-	*Traffic light*	*0*	-	*Average (of DGAC and PCC)*	*0*
0+000	1845	Automobiles	-	71	-	48	Traffic light	0	-	Average (of DGAC and PCC)	0
0+000	1845	Medium trucks	-	44	-	48	Traffic light	0	-	Average (of DGAC and PCC)	0
0+000	1845	Heavy trucks	-	6	-	48	Traffic light	0	-	Average (of DGAC and PCC)	0
0+000	1845	Buses	-	1	-	48	Traffic light	0	-	Average (of DGAC and PCC)	0
0+000	1845	Motorcycles	-	1	-	48	Traffic light	0	-	Average (of DGAC and PCC)	0
0+000	1845	Auxiliary Vehicle	-	-	-	48	Traffic light	0	-	Average (of DGAC and PCC)	0
Roseglen St NB	**Traffic direction: In entry direction**										
10+304	*5430*	*Total*	-	*362*	-	-	*Traffic light*	*0*	-	*Average (of DGAC and PCC)*	*0*
10+304	5430	Automobiles	-	210	-	48	Traffic light	0	-	Average (of DGAC and PCC)	0
10+304	5430	Medium trucks	-	129	-	48	Traffic light	0	-	Average (of DGAC and PCC)	0
10+304	5430	Heavy trucks	-	17	-	48	Traffic light	0	-	Average (of DGAC and PCC)	0
10+304	5430	Buses	-	3	-	48	Traffic light	0	-	Average (of DGAC and PCC)	0
10+304	5430	Motorcycles	-	3	-	48	Traffic light	0	-	Average (of DGAC and PCC)	0
10+304	5430	Auxiliary Vehicle	-	-	-	48	Traffic light	0	-	Average (of DGAC and PCC)	0
10+430	*5430*	*Total*	-	*362*	-	-	*none*	-	-	*Average (of DGAC and PCC)*	*0*
10+430	5430	Automobiles	-	210	-	48	none	-	-	Average (of DGAC and PCC)	0
10+430	5430	Medium trucks	-	129	-	48	none	-	-	Average (of DGAC and PCC)	0
10+430	5430	Heavy trucks	-	17	-	48	none	-	-	Average (of DGAC and PCC)	0
10+430	5430	Buses	-	3	-	48	none	-	-	Average (of DGAC and PCC)	0
10+430	5430	Motorcycles	-	3	-	48	none	-	-	Average (of DGAC and PCC)	0
10+430	5430	Auxiliary Vehicle	-	-	-	48	none	-	-	Average (of DGAC and PCC)	0
10+489	*5430*	*Total*	-	*362*	-	-	*none*	-	-	*Average (of DGAC and PCC)*	*0*
10+489	5430	Automobiles	-	210	-	48	none	-	-	Average (of DGAC and PCC)	0
10+489	5430	Medium trucks	-	129	-	48	none	-	-	Average (of DGAC and PCC)	0
10+489	5430	Heavy trucks	-	17	-	48	none	-	-	Average (of DGAC and PCC)	0
10+489	5430	Buses	-	3	-	48	none	-	-	Average (of DGAC and PCC)	0
10+489	5430	Motorcycles	-	3	-	48	none	-	-	Average (of DGAC and PCC)	0
10+489	5430	Auxiliary Vehicle	-	-	-	48	none	-	-	Average (of DGAC and PCC)	0
11+054	-						-	-	-	-	-
0+000	*5430*	*Total*	-	*362*	-	-	*none*	-	-	*Average (of DGAC and PCC)*	*0*
0+000	5430	Automobiles	-	210	-	48	none	-	-	Average (of DGAC and PCC)	0
0+000	5430	Medium trucks	-	129	-	48	none	-	-	Average (of DGAC and PCC)	0
0+000	5430	Heavy trucks	-	17	-	48	none	-	-	Average (of DGAC and PCC)	0
0+000	5430	Buses	-	3	-	48	none	-	-	Average (of DGAC and PCC)	0
0+000	5430	Motorcycles	-	3	-	48	none	-	-	Average (of DGAC and PCC)	0

0+000	5430	Auxiliary Vehicle	-	-	-	48	none	-	-	Average (of DGAC and PCC)	0
Roseglen St NB1	**Traffic direction:**	**In entry direction**									
10+304	*1845*	*Total*	-		*123*	-	-	*Traffic light*	*0*	-	*Average (of DGAC and PCC)*	*0*
10+304	1845	Automobiles	-		71	-	48	Traffic light	0	-	Average (of DGAC and PCC)	0
10+304	1845	Medium trucks	-		44	-	48	Traffic light	0	-	Average (of DGAC and PCC)	0
10+304	1845	Heavy trucks	-		6	-	48	Traffic light	0	-	Average (of DGAC and PCC)	0
10+304	1845	Buses	-		1	-	48	Traffic light	0	-	Average (of DGAC and PCC)	0
10+304	1845	Motorcycles	-		1	-	48	Traffic light	0	-	Average (of DGAC and PCC)	0
10+304	1845	Auxiliary Vehicle	-	-	-		48	Traffic light	0	-	Average (of DGAC and PCC)	0
10+644	*1845*	*Total*	-		*123*	-	-	*none*	-	-	*Average (of DGAC and PCC)*	*0*
10+644	1845	Automobiles	-		71	-	48	none	-	-	Average (of DGAC and PCC)	0
10+644	1845	Medium trucks	-		44	-	48	none	-	-	Average (of DGAC and PCC)	0
10+644	1845	Heavy trucks	-		6	-	48	none	-	-	Average (of DGAC and PCC)	0
10+644	1845	Buses	-		1	-	48	none	-	-	Average (of DGAC and PCC)	0
10+644	1845	Motorcycles	-		1	-	48	none	-	-	Average (of DGAC and PCC)	0
10+644	1845	Auxiliary Vehicle	-	-	-		48	none	-	-	Average (of DGAC and PCC)	0
10+734	*1845*	*Total*	-		*123*	-	-	*none*	-	-	*Average (of DGAC and PCC)*	*0*
10+734	1845	Automobiles	-		71	-	48	none	-	-	Average (of DGAC and PCC)	0
10+734	1845	Medium trucks	-		44	-	48	none	-	-	Average (of DGAC and PCC)	0
10+734	1845	Heavy trucks	-		6	-	48	none	-	-	Average (of DGAC and PCC)	0
10+734	1845	Buses	-		1	-	48	none	-	-	Average (of DGAC and PCC)	0
10+734	1845	Motorcycles	-		1	-	48	none	-	-	Average (of DGAC and PCC)	0
10+734	1845	Auxiliary Vehicle	-	-	-		48	none	-	-	Average (of DGAC and PCC)	0
11+141	-							-	-	-	-	-
0+000	*1845*	*Total*	-		*123*	-	-	*none*	-	-	*Average (of DGAC and PCC)*	*0*
0+000	1845	Automobiles	-		71	-	48	none	-	-	Average (of DGAC and PCC)	0
0+000	1845	Medium trucks	-		44	-	48	none	-	-	Average (of DGAC and PCC)	0
0+000	1845	Heavy trucks	-		6	-	48	none	-	-	Average (of DGAC and PCC)	0
0+000	1845	Buses	-		1	-	48	none	-	-	Average (of DGAC and PCC)	0
0+000	1845	Motorcycles	-		1	-	48	none	-	-	Average (of DGAC and PCC)	0
0+000	1845	Auxiliary Vehicle	-	-	-		48	none	-	-	Average (of DGAC and PCC)	0
Durfee Ave NB	**Traffic direction:**	**In entry direction**									
10+304	*5430*	*Total*	-		*362*	-	-	*none*	-	-	*Average (of DGAC and PCC)*	*0*
10+304	5430	Automobiles	-		210	-	48	none	-	-	Average (of DGAC and PCC)	0
10+304	5430	Medium trucks	-		129	-	48	none	-	-	Average (of DGAC and PCC)	0
10+304	5430	Heavy trucks	-		17	-	48	none	-	-	Average (of DGAC and PCC)	0
10+304	5430	Buses	-		3	-	48	none	-	-	Average (of DGAC and PCC)	0
10+304	5430	Motorcycles	-		3	-	48	none	-	-	Average (of DGAC and PCC)	0
10+304	5430	Auxiliary Vehicle	-	-	-		48	none	-	-	Average (of DGAC and PCC)	0
10+709	*5430*	*Total*	-		*362*	-	-	*none*	-	-	*Average (of DGAC and PCC)*	*0*
10+709	5430	Automobiles	-		210	-	48	none	-	-	Average (of DGAC and PCC)	0
10+709	5430	Medium trucks	-		129	-	48	none	-	-	Average (of DGAC and PCC)	0
10+709	5430	Heavy trucks	-		17	-	48	none	-	-	Average (of DGAC and PCC)	0
10+709	5430	Buses	-		3	-	48	none	-	-	Average (of DGAC and PCC)	0
10+709	5430	Motorcycles	-		3	-	48	none	-	-	Average (of DGAC and PCC)	0
10+709	5430	Auxiliary Vehicle	-	-	-		48	none	-	-	Average (of DGAC and PCC)	0
11+146	-							-	-	-	-	-
0+000	*5430*	*Total*	-		*362*	-	-	*Traffic light*	*0*	-	*Average (of DGAC and PCC)*	*0*
0+000	5430	Automobiles	-		210	-	48	Traffic light	0	-	Average (of DGAC and PCC)	0
0+000	5430	Medium trucks	-		129	-	48	Traffic light	0	-	Average (of DGAC and PCC)	0
0+000	5430	Heavy trucks	-		17	-	48	Traffic light	0	-	Average (of DGAC and PCC)	0
0+000	5430	Buses	-		3	-	48	Traffic light	0	-	Average (of DGAC and PCC)	0
0+000	5430	Motorcycles	-		3	-	48	Traffic light	0	-	Average (of DGAC and PCC)	0
0+000	5430	Auxiliary Vehicle	-	-	-		48	Traffic light	0	-	Average (of DGAC and PCC)	0
Durfee Ave SB (South)	**Traffic direction:**	**In entry direction**									
10+304	*7035*	*Total*	-		*469*	-	-	*none*	-	-	*Average (of DGAC and PCC)*	*0*
10+304	7035	Automobiles	-		273	-	40	none	-	-	Average (of DGAC and PCC)	0
10+304	7035	Medium trucks	-		167	-	40	none	-	-	Average (of DGAC and PCC)	0
10+304	7035	Heavy trucks	-		22	-	40	none	-	-	Average (of DGAC and PCC)	0
10+304	7035	Buses	-		4	-	40	none	-	-	Average (of DGAC and PCC)	0
10+304	7035	Motorcycles	-		3	-	40	none	-	-	Average (of DGAC and PCC)	0
10+304	7035	Auxiliary Vehicle	-	-	-		40	none	-	-	Average (of DGAC and PCC)	0
11+006	-							-	-	-	-	-
0+000	*7035*	*Total*	-		*469*	-	-	*none*	-	-	*Average (of DGAC and PCC)*	*0*
0+000	7035	Automobiles	-		273	-	40	none	-	-	Average (of DGAC and PCC)	0
0+000	7035	Medium trucks	-		167	-	40	none	-	-	Average (of DGAC and PCC)	0
0+000	7035	Heavy trucks	-		22	-	40	none	-	-	Average (of DGAC and PCC)	0
0+000	7035	Buses	-		4	-	40	none	-	-	Average (of DGAC and PCC)	0
0+000	7035	Motorcycles	-		3	-	40	none	-	-	Average (of DGAC and PCC)	0
0+000	7035	Auxiliary Vehicle	-	-	-		40	none	-	-	Average (of DGAC and PCC)	0

Durfee Ave NB (South)	**Traffic direction:**	**In entry direction**										
10+304	-							-	-	-	-	0
11+002	-							-	-	-	-	
0+000	-							-	-	-	-	0
Gilman Rd SB	**Traffic direction:**	**In entry direction**										
10+304	*6570*	*Total*	-	*438*	-	-	*Traffic light*	*0*	-	*Average (of DGAC and PCC)*	*0*
10+304	6570	Automobiles	-	255	-		40 Traffic light	0	-	Average (of DGAC and PCC)	0
10+304	6570	Medium trucks	-	156	-		40 Traffic light	0	-	Average (of DGAC and PCC)	0
10+304	6570	Heavy trucks	-	21	-		40 Traffic light	0	-	Average (of DGAC and PCC)	0
10+304	6570	Buses	-	3	-		40 Traffic light	0	-	Average (of DGAC and PCC)	0
10+304	6570	Motorcycles	-	3	-		40 Traffic light	0	-	Average (of DGAC and PCC)	0
10+304	6570	Auxiliary Vehicle	-	-	-		40 Traffic light	0	-	Average (of DGAC and PCC)	0
11+254	-							-	-	-	-	
0+000	*6570*	*Total*	-	*438*	-	-	*none*	-	-	*Average (of DGAC and PCC)*	*0*
0+000	6570	Automobiles	-	255	-		40 none	-	-	Average (of DGAC and PCC)	0
0+000	6570	Medium trucks	-	156	-		40 none	-	-	Average (of DGAC and PCC)	0
0+000	6570	Heavy trucks	-	21	-		40 none	-	-	Average (of DGAC and PCC)	0
0+000	6570	Buses	-	3	-		40 none	-	-	Average (of DGAC and PCC)	0
0+000	6570	Motorcycles	-	3	-		40 none	-	-	Average (of DGAC and PCC)	0
0+000	6570	Auxiliary Vehicle	-	-	-		40 none	-	-	Average (of DGAC and PCC)	0
Gilman Rd NB	**Traffic direction:**	**In entry direction**										
10+304	*2145*	*Total*	-	*143*	-	-	*none*	-	-	*Average (of DGAC and PCC)*	*0*
10+304	2145	Automobiles	-	83	-		40 none	-	-	Average (of DGAC and PCC)	0
10+304	2145	Medium trucks	-	51	-		40 none	-	-	Average (of DGAC and PCC)	0
10+304	2145	Heavy trucks	-	7	-		40 none	-	-	Average (of DGAC and PCC)	0
10+304	2145	Buses	-	1	-		40 none	-	-	Average (of DGAC and PCC)	0
10+304	2145	Motorcycles	-	1	-		40 none	-	-	Average (of DGAC and PCC)	0
10+304	2145	Auxiliary Vehicle	-	-	-		40 none	-	-	Average (of DGAC and PCC)	0
11+260	-							-	-	-	-	
0+000	*2145*	*Total*	-	*143*	-	-	*Traffic light*	*0*	-	*Average (of DGAC and PCC)*	*0*
0+000	2145	Automobiles	-	83	-		40 Traffic light	0	-	Average (of DGAC and PCC)	0
0+000	2145	Medium trucks	-	51	-		40 Traffic light	0	-	Average (of DGAC and PCC)	0
0+000	2145	Heavy trucks	-	7	-		40 Traffic light	0	-	Average (of DGAC and PCC)	0
0+000	2145	Buses	-	1	-		40 Traffic light	0	-	Average (of DGAC and PCC)	0
0+000	2145	Motorcycles	-	1	-		40 Traffic light	0	-	Average (of DGAC and PCC)	0
0+000	2145	Auxiliary Vehicle	-	-	-		40 Traffic light	0	-	Average (of DGAC and PCC)	0
I-10 EB	**Traffic direction:**	**In entry direction**										
10+304	*117705*	*Total*	-	*7847*	-	-	*none*	-	-	*Average (of DGAC and PCC)*	*0*
10+304	117705	Automobiles	-	4582	-		105 none	-	-	Average (of DGAC and PCC)	0
10+304	117705	Medium trucks	-	2798	-		105 none	-	-	Average (of DGAC and PCC)	0
10+304	117705	Heavy trucks	-	366	-		105 none	-	-	Average (of DGAC and PCC)	0
10+304	117705	Buses	-	52	-		105 none	-	-	Average (of DGAC and PCC)	0
10+304	117705	Motorcycles	-	49	-		105 none	-	-	Average (of DGAC and PCC)	0
10+304	117705	Auxiliary Vehicle	-	-	-		105 none	-	-	Average (of DGAC and PCC)	0
12+635	*147825*	*Total*	-	*9855*	-	-	*none*	-	-	*Average (of DGAC and PCC)*	*0*
12+635	147825	Automobiles	-	5755	-		105 none	-	-	Average (of DGAC and PCC)	0
12+635	147825	Medium trucks	-	3514	-		105 none	-	-	Average (of DGAC and PCC)	0
12+635	147825	Heavy trucks	-	460	-		105 none	-	-	Average (of DGAC and PCC)	0
12+635	147825	Buses	-	65	-		105 none	-	-	Average (of DGAC and PCC)	0
12+635	147825	Motorcycles	-	61	-		105 none	-	-	Average (of DGAC and PCC)	0
12+635	147825	Auxiliary Vehicle	-	-	-		105 none	-	-	Average (of DGAC and PCC)	0
17+769	*113940*	*Total*	-	*7596*	-	-	*none*	-	-	*Average (of DGAC and PCC)*	*0*
17+769	113940	Automobiles	-	4435	-		105 none	-	-	Average (of DGAC and PCC)	0
17+769	113940	Medium trucks	-	2708	-		105 none	-	-	Average (of DGAC and PCC)	0
17+769	113940	Heavy trucks	-	355	-		105 none	-	-	Average (of DGAC and PCC)	0
17+769	113940	Buses	-	51	-		105 none	-	-	Average (of DGAC and PCC)	0
17+769	113940	Motorcycles	-	47	-		105 none	-	-	Average (of DGAC and PCC)	0
17+769	113940	Auxiliary Vehicle	-	-	-		105 none	-	-	Average (of DGAC and PCC)	0
18+525	*113955*	*Total*	-	*7597*	-	-	*none*	-	-	*Average (of DGAC and PCC)*	*0*
18+525	113955	Automobiles	-	4436	-		105 none	-	-	Average (of DGAC and PCC)	0
18+525	113955	Medium trucks	-	2708	-		105 none	-	-	Average (of DGAC and PCC)	0
18+525	113955	Heavy trucks	-	355	-		105 none	-	-	Average (of DGAC and PCC)	0
18+525	113955	Buses	-	51	-		105 none	-	-	Average (of DGAC and PCC)	0
18+525	113955	Motorcycles	-	47	-		105 none	-	-	Average (of DGAC and PCC)	0
18+525	113955	Auxiliary Vehicle	-	-	-		105 none	-	-	Average (of DGAC and PCC)	0
19+393	*113955*	*Total*	-	*7597*	-	-	*none*	-	-	*Average (of DGAC and PCC)*	*0*
19+393	113955	Automobiles	-	4436	-		105 none	-	-	Average (of DGAC and PCC)	0
19+393	113955	Medium trucks	-	2708	-		105 none	-	-	Average (of DGAC and PCC)	0
19+393	113955	Heavy trucks	-	355	-		105 none	-	-	Average (of DGAC and PCC)	0
19+393	113955	Buses	-	51	-		105 none	-	-	Average (of DGAC and PCC)	0

19+393	113955	Motorcycles	-	47	-	105	none	-	-	Average (of DGAC and PCC)	0
19+393	113955	Auxiliary Vehicle	-	-	-	105	none	-	-	Average (of DGAC and PCC)	0
20+123	-						-	-	-	-	-
I-10 WB	**Traffic direction: In entry direction**										
10+304	*123495*	*Total*	-	*8233*	-	-	*none*	-	-	*Average (of DGAC and PCC)*	*0*
10+304	123495	Automobiles	-	4808	-	105	none	-	-	Average (of DGAC and PCC)	0
10+304	123495	Medium trucks	-	2935	-	105	none	-	-	Average (of DGAC and PCC)	0
10+304	123495	Heavy trucks	-	384	-	105	none	-	-	Average (of DGAC and PCC)	0
10+304	123495	Buses	-	55	-	105	none	-	-	Average (of DGAC and PCC)	0
10+304	123495	Motorcycles	-	51	-	105	none	-	-	Average (of DGAC and PCC)	0
10+304	123495	Auxiliary Vehicle	-	-	-	105	none	-	-	Average (of DGAC and PCC)	0
12+623	*131235*	*Total*	-	*8749*	-	-	*none*	-	-	*Average (of DGAC and PCC)*	*0*
12+623	131235	Automobiles	-	5109	-	105	none	-	-	Average (of DGAC and PCC)	0
12+623	131235	Medium trucks	-	3119	-	105	none	-	-	Average (of DGAC and PCC)	0
12+623	131235	Heavy trucks	-	409	-	105	none	-	-	Average (of DGAC and PCC)	0
12+623	131235	Buses	-	58	-	105	none	-	-	Average (of DGAC and PCC)	0
12+623	131235	Motorcycles	-	54	-	105	none	-	-	Average (of DGAC and PCC)	0
12+623	131235	Auxiliary Vehicle	-	-	-	105	none	-	-	Average (of DGAC and PCC)	0
15+597	*115320*	*Total*	-	*7688*	-	-	*none*	-	-	*Average (of DGAC and PCC)*	*0*
15+597	115320	Automobiles	-	4489	-	105	none	-	-	Average (of DGAC and PCC)	0
15+597	115320	Medium trucks	-	2741	-	105	none	-	-	Average (of DGAC and PCC)	0
15+597	115320	Heavy trucks	-	359	-	105	none	-	-	Average (of DGAC and PCC)	0
15+597	115320	Buses	-	51	-	105	none	-	-	Average (of DGAC and PCC)	0
15+597	115320	Motorcycles	-	48	-	105	none	-	-	Average (of DGAC and PCC)	0
15+597	115320	Auxiliary Vehicle	-	-	-	105	none	-	-	Average (of DGAC and PCC)	0
20+122	-						-	-	-	-	-
0+000	*115320*	*Total*	-	*7688*	-	-	*none*	-	-	*Average (of DGAC and PCC)*	*0*
0+000	115320	Automobiles	-	4489	-	105	none	-	-	Average (of DGAC and PCC)	0
0+000	115320	Medium trucks	-	2741	-	105	none	-	-	Average (of DGAC and PCC)	0
0+000	115320	Heavy trucks	-	359	-	105	none	-	-	Average (of DGAC and PCC)	0
0+000	115320	Buses	-	51	-	105	none	-	-	Average (of DGAC and PCC)	0
0+000	115320	Motorcycles	-	48	-	105	none	-	-	Average (of DGAC and PCC)	0
0+000	115320	Auxiliary Vehicle	-	-	-	105	none	-	-	Average (of DGAC and PCC)	0
Valley Blvd EB	**Traffic direction: In entry direction**										
2+808	*40440*	*Total*	-	*2696*	-	-	*none*	-	-	*Average (of DGAC and PCC)*	*0*
2+808	40440	Automobiles	-	1574	-	56	none	-	-	Average (of DGAC and PCC)	0
2+808	40440	Medium trucks	-	961	-	56	none	-	-	Average (of DGAC and PCC)	0
2+808	40440	Heavy trucks	-	126	-	56	none	-	-	Average (of DGAC and PCC)	0
2+808	40440	Buses	-	18	-	56	none	-	-	Average (of DGAC and PCC)	0
2+808	40440	Motorcycles	-	17	-	56	none	-	-	Average (of DGAC and PCC)	0
2+808	40440	Auxiliary Vehicle	-	-	-	56	none	-	-	Average (of DGAC and PCC)	0
3+202	*40440*	*Total*	-	*2696*	-	-	*Traffic light*	*0*	-	*Average (of DGAC and PCC)*	*0*
3+202	40440	Automobiles	-	1574	-	56	Traffic light	0	-	Average (of DGAC and PCC)	0
3+202	40440	Medium trucks	-	961	-	56	Traffic light	0	-	Average (of DGAC and PCC)	0
3+202	40440	Heavy trucks	-	126	-	56	Traffic light	0	-	Average (of DGAC and PCC)	0
3+202	40440	Buses	-	18	-	56	Traffic light	0	-	Average (of DGAC and PCC)	0
3+202	40440	Motorcycles	-	17	-	56	Traffic light	0	-	Average (of DGAC and PCC)	0
3+202	40440	Auxiliary Vehicle	-	-	-	56	Traffic light	0	-	Average (of DGAC and PCC)	0
4+173	*36840*	*Total*	-	*2456*	-	-	*Traffic light*	*0*	-	*Average (of DGAC and PCC)*	*0*
4+173	36840	Automobiles	-	1433	-	56	Traffic light	0	-	Average (of DGAC and PCC)	0
4+173	36840	Medium trucks	-	875	-	56	Traffic light	0	-	Average (of DGAC and PCC)	0
4+173	36840	Heavy trucks	-	115	-	56	Traffic light	0	-	Average (of DGAC and PCC)	0
4+173	36840	Buses	-	17	-	56	Traffic light	0	-	Average (of DGAC and PCC)	0
4+173	36840	Motorcycles	-	16	-	56	Traffic light	0	-	Average (of DGAC and PCC)	0
4+173	36840	Auxiliary Vehicle	-	-	-	56	Traffic light	0	-	Average (of DGAC and PCC)	0
5+211	*27240*	*Total*	-	*1816*	-	-	*Traffic light*	*0*	-	*Average (of DGAC and PCC)*	*0*
5+211	27240	Automobiles	-	1060	-	56	Traffic light	0	-	Average (of DGAC and PCC)	0
5+211	27240	Medium trucks	-	647	-	56	Traffic light	0	-	Average (of DGAC and PCC)	0
5+211	27240	Heavy trucks	-	85	-	56	Traffic light	0	-	Average (of DGAC and PCC)	0
5+211	27240	Buses	-	12	-	56	Traffic light	0	-	Average (of DGAC and PCC)	0
5+211	27240	Motorcycles	-	12	-	56	Traffic light	0	-	Average (of DGAC and PCC)	0
5+211	27240	Auxiliary Vehicle	-	-	-	56	Traffic light	0	-	Average (of DGAC and PCC)	0
6+870	*27240*	*Total*	-	*1816*	-	-	*none*	-	-	*Average (of DGAC and PCC)*	*0*
6+870	27240	Automobiles	-	1060	-	56	none	-	-	Average (of DGAC and PCC)	0
6+870	27240	Medium trucks	-	647	-	56	none	-	-	Average (of DGAC and PCC)	0
6+870	27240	Heavy trucks	-	85	-	56	none	-	-	Average (of DGAC and PCC)	0
6+870	27240	Buses	-	12	-	56	none	-	-	Average (of DGAC and PCC)	0
6+870	27240	Motorcycles	-	12	-	56	none	-	-	Average (of DGAC and PCC)	0
6+870	27240	Auxiliary Vehicle	-	-	-	56	none	-	-	Average (of DGAC and PCC)	0
6+923	*39180*	*Total*	-	*2612*	-	-	*Traffic light*	*0*	-	*Average (of DGAC and PCC)*	*0*

6+923	39180	Automobiles	-	1524	-	56	Traffic light	0	-	Average (of DGAC and PCC)	0
6+923	39180	Medium trucks	-	931	-	56	Traffic light	0	-	Average (of DGAC and PCC)	0
6+923	39180	Heavy trucks	-	122	-	56	Traffic light	0	-	Average (of DGAC and PCC)	0
6+923	39180	Buses	-	18	-	56	Traffic light	0	-	Average (of DGAC and PCC)	0
6+923	39180	Motorcycles	-	17	-	56	Traffic light	0	-	Average (of DGAC and PCC)	0
6+923	39180	Auxiliary Vehicle	-	-	-	56	Traffic light	0	-	Average (of DGAC and PCC)	0
7+613	*37575*	*Total*	-	*2505*	-	-	*Traffic light*	*0*	-	*Average (of DGAC and PCC)*	*0*
7+613	37575	Automobiles	-	1462	-	56	Traffic light	0	-	Average (of DGAC and PCC)	0
7+613	37575	Medium trucks	-	893	-	56	Traffic light	0	-	Average (of DGAC and PCC)	0
7+613	37575	Heavy trucks	-	117	-	56	Traffic light	0	-	Average (of DGAC and PCC)	0
7+613	37575	Buses	-	17	-	56	Traffic light	0	-	Average (of DGAC and PCC)	0
7+613	37575	Motorcycles	-	16	-	56	Traffic light	0	-	Average (of DGAC and PCC)	0
7+613	37575	Auxiliary Vehicle	-	-	-	56	Traffic light	0	-	Average (of DGAC and PCC)	0
8+136	*37575*	*Total*	-	*2505*	-	-	*none*	-	-	*Average (of DGAC and PCC)*	*0*
8+136	37575	Automobiles	-	1462	-	56	none	-	-	Average (of DGAC and PCC)	0
8+136	37575	Medium trucks	-	893	-	56	none	-	-	Average (of DGAC and PCC)	0
8+136	37575	Heavy trucks	-	117	-	56	none	-	-	Average (of DGAC and PCC)	0
8+136	37575	Buses	-	17	-	56	none	-	-	Average (of DGAC and PCC)	0
8+136	37575	Motorcycles	-	16	-	56	none	-	-	Average (of DGAC and PCC)	0
8+136	37575	Auxiliary Vehicle	-	-	-	56	none	-	-	Average (of DGAC and PCC)	0
8+496	*37575*	*Total*	-	*2505*	-	-	*none*	-	-	*Average (of DGAC and PCC)*	*0*
8+496	37575	Automobiles	-	1462	-	56	none	-	-	Average (of DGAC and PCC)	0
8+496	37575	Medium trucks	-	893	-	56	none	-	-	Average (of DGAC and PCC)	0
8+496	37575	Heavy trucks	-	117	-	56	none	-	-	Average (of DGAC and PCC)	0
8+496	37575	Buses	-	17	-	56	none	-	-	Average (of DGAC and PCC)	0
8+496	37575	Motorcycles	-	16	-	56	none	-	-	Average (of DGAC and PCC)	0
8+496	37575	Auxiliary Vehicle	-	-	-	56	none	-	-	Average (of DGAC and PCC)	0
8+965	*37575*	*Total*	-	*2505*	-	-	*none*	-	-	*Average (of DGAC and PCC)*	*0*
8+965	37575	Automobiles	-	1462	-	40	none	-	-	Average (of DGAC and PCC)	0
8+965	37575	Medium trucks	-	893	-	40	none	-	-	Average (of DGAC and PCC)	0
8+965	37575	Heavy trucks	-	117	-	40	none	-	-	Average (of DGAC and PCC)	0
8+965	37575	Buses	-	17	-	40	none	-	-	Average (of DGAC and PCC)	0
8+965	37575	Motorcycles	-	16	-	40	none	-	-	Average (of DGAC and PCC)	0
8+965	37575	Auxiliary Vehicle	-	-	-	40	none	-	-	Average (of DGAC and PCC)	0
9+092	*29265*	*Total*	-	*1951*	-	-	*Traffic light*	*0*	-	*Average (of DGAC and PCC)*	*0*
9+092	29265	Automobiles	-	1139	-	56	Traffic light	0	-	Average (of DGAC and PCC)	0
9+092	29265	Medium trucks	-	695	-	56	Traffic light	0	-	Average (of DGAC and PCC)	0
9+092	29265	Heavy trucks	-	91	-	56	Traffic light	0	-	Average (of DGAC and PCC)	0
9+092	29265	Buses	-	13	-	56	Traffic light	0	-	Average (of DGAC and PCC)	0
9+092	29265	Motorcycles	-	13	-	56	Traffic light	0	-	Average (of DGAC and PCC)	0
9+092	29265	Auxiliary Vehicle	-	-	-	56	Traffic light	0	-	Average (of DGAC and PCC)	0
9+209	*29265*	*Total*	-	*1951*	-	-	*none*	-	-	*Average (of DGAC and PCC)*	*0*
9+209	29265	Automobiles	-	1139	-	56	none	-	-	Average (of DGAC and PCC)	0
9+209	29265	Medium trucks	-	695	-	56	none	-	-	Average (of DGAC and PCC)	0
9+209	29265	Heavy trucks	-	91	-	56	none	-	-	Average (of DGAC and PCC)	0
9+209	29265	Buses	-	13	-	56	none	-	-	Average (of DGAC and PCC)	0
9+209	29265	Motorcycles	-	13	-	56	none	-	-	Average (of DGAC and PCC)	0
9+209	29265	Auxiliary Vehicle	-	-	-	56	none	-	-	Average (of DGAC and PCC)	0
9+800	*31050*	*Total*	-	*2070*	-	-	*Traffic light*	*0*	-	*Average (of DGAC and PCC)*	*0*
9+800	31050	Automobiles	-	1208	-	56	Traffic light	0	-	Average (of DGAC and PCC)	0
9+800	31050	Medium trucks	-	738	-	56	Traffic light	0	-	Average (of DGAC and PCC)	0
9+800	31050	Heavy trucks	-	97	-	56	Traffic light	0	-	Average (of DGAC and PCC)	0
9+800	31050	Buses	-	14	-	56	Traffic light	0	-	Average (of DGAC and PCC)	0
9+800	31050	Motorcycles	-	13	-	56	Traffic light	0	-	Average (of DGAC and PCC)	0
9+800	31050	Auxiliary Vehicle	-	-	-	56	Traffic light	0	-	Average (of DGAC and PCC)	0
9+998	*31050*	*Total*	-	*2070*	-	-	*none*	-	-	*Average (of DGAC and PCC)*	*0*
9+998	31050	Automobiles	-	1208	-	56	none	-	-	Average (of DGAC and PCC)	0
9+998	31050	Medium trucks	-	738	-	56	none	-	-	Average (of DGAC and PCC)	0
9+998	31050	Heavy trucks	-	97	-	56	none	-	-	Average (of DGAC and PCC)	0
9+998	31050	Buses	-	14	-	56	none	-	-	Average (of DGAC and PCC)	0
9+998	31050	Motorcycles	-	13	-	56	none	-	-	Average (of DGAC and PCC)	0
9+998	31050	Auxiliary Vehicle	-	-	-	56	none	-	-	Average (of DGAC and PCC)	0
10+063	*31050*	*Total*	-	*2070*	-	-	*none*	-	-	*Average (of DGAC and PCC)*	*0*
10+063	31050	Automobiles	-	1208	-	56	none	-	-	Average (of DGAC and PCC)	0
10+063	31050	Medium trucks	-	738	-	56	none	-	-	Average (of DGAC and PCC)	0
10+063	31050	Heavy trucks	-	97	-	56	none	-	-	Average (of DGAC and PCC)	0
10+063	31050	Buses	-	14	-	56	none	-	-	Average (of DGAC and PCC)	0
10+063	31050	Motorcycles	-	13	-	56	none	-	-	Average (of DGAC and PCC)	0
10+063	31050	Auxiliary Vehicle	-	-	-	56	none	-	-	Average (of DGAC and PCC)	0
10+231	*24885*	*Total*	-	*1659*	-	-	*Traffic light*	*0*	-	*Average (of DGAC and PCC)*	*0*

10+231	24885	Automobiles	-	968	-	56	Traffic light	0	-	Average (of DGAC and PCC)	0
10+231	24885	Medium trucks	-	591	-	56	Traffic light	0	-	Average (of DGAC and PCC)	0
10+231	24885	Heavy trucks	-	78	-	56	Traffic light	0	-	Average (of DGAC and PCC)	0
10+231	24885	Buses	-	11	-	56	Traffic light	0	-	Average (of DGAC and PCC)	0
10+231	24885	Motorcycles	-	11	-	56	Traffic light	0	-	Average (of DGAC and PCC)	0
10+231	24885	Auxiliary Vehicle	-	-	-	56	Traffic light	0	-	Average (of DGAC and PCC)	0
10+389	*24885*	*Total*	-	*1659*	-	-	*none*	-	-	*Average (of DGAC and PCC)*	*0*
10+389	24885	Automobiles	-	968	-	56	none	-	-	Average (of DGAC and PCC)	0
10+389	24885	Medium trucks	-	591	-	56	none	-	-	Average (of DGAC and PCC)	0
10+389	24885	Heavy trucks	-	78	-	56	none	-	-	Average (of DGAC and PCC)	0
10+389	24885	Buses	-	11	-	56	none	-	-	Average (of DGAC and PCC)	0
10+389	24885	Motorcycles	-	11	-	56	none	-	-	Average (of DGAC and PCC)	0
10+389	24885	Auxiliary Vehicle	-	-	-	56	none	-	-	Average (of DGAC and PCC)	0
10+931	*36225*	*Total*	-	*2415*	-	-	*Traffic light*	*0*	-	*Average (of DGAC and PCC)*	*0*
10+931	36225	Automobiles	-	1410	-	56	Traffic light	0	-	Average (of DGAC and PCC)	0
10+931	36225	Medium trucks	-	861	-	56	Traffic light	0	-	Average (of DGAC and PCC)	0
10+931	36225	Heavy trucks	-	113	-	56	Traffic light	0	-	Average (of DGAC and PCC)	0
10+931	36225	Buses	-	16	-	56	Traffic light	0	-	Average (of DGAC and PCC)	0
10+931	36225	Motorcycles	-	15	-	56	Traffic light	0	-	Average (of DGAC and PCC)	0
10+931	36225	Auxiliary Vehicle	-	-	-	56	Traffic light	0	-	Average (of DGAC and PCC)	0
12+220	*33705*	*Total*	-	*2247*	-	-	*Traffic light*	*0*	-	*Average (of DGAC and PCC)*	*0*
12+220	33705	Automobiles	-	1312	-	56	Traffic light	0	-	Average (of DGAC and PCC)	0
12+220	33705	Medium trucks	-	801	-	56	Traffic light	0	-	Average (of DGAC and PCC)	0
12+220	33705	Heavy trucks	-	105	-	56	Traffic light	0	-	Average (of DGAC and PCC)	0
12+220	33705	Buses	-	15	-	56	Traffic light	0	-	Average (of DGAC and PCC)	0
12+220	33705	Motorcycles	-	14	-	56	Traffic light	0	-	Average (of DGAC and PCC)	0
12+220	33705	Auxiliary Vehicle	-	-	-	56	Traffic light	0	-	Average (of DGAC and PCC)	0
12+785	-						-	-	-	-	-
0+000	*33705*	*Total*	-	*2247*	-	-	*none*	-	-	*Average (of DGAC and PCC)*	*0*
0+000	33705	Automobiles	-	1312	-	56	none	-	-	Average (of DGAC and PCC)	0
0+000	33705	Medium trucks	-	801	-	56	none	-	-	Average (of DGAC and PCC)	0
0+000	33705	Heavy trucks	-	105	-	56	none	-	-	Average (of DGAC and PCC)	0
0+000	33705	Buses	-	15	-	56	none	-	-	Average (of DGAC and PCC)	0
0+000	33705	Motorcycles	-	14	-	56	none	-	-	Average (of DGAC and PCC)	0
0+000	33705	Auxiliary Vehicle	-	-	-	56	none	-	-	Average (of DGAC and PCC)	0
Valley Mall NB	**Traffic direction: In entry direction**										
2+808	*3525*	*Total*	-	*235*	-	-	*none*	-	-	*Average (of DGAC and PCC)*	*0*
2+808	3525	Automobiles	-	136	-	40	none	-	-	Average (of DGAC and PCC)	0
2+808	3525	Medium trucks	-	84	-	40	none	-	-	Average (of DGAC and PCC)	0
2+808	3525	Heavy trucks	-	11	-	40	none	-	-	Average (of DGAC and PCC)	0
2+808	3525	Buses	-	2	-	40	none	-	-	Average (of DGAC and PCC)	0
2+808	3525	Motorcycles	-	2	-	40	none	-	-	Average (of DGAC and PCC)	0
2+808	3525	Auxiliary Vehicle	-	-	-	40	none	-	-	Average (of DGAC and PCC)	0
3+305	*3540*	*Total*	-	*236*	-	-	*none*	-	-	*Average (of DGAC and PCC)*	*0*
3+305	3540	Automobiles	-	137	-	40	none	-	-	Average (of DGAC and PCC)	0
3+305	3540	Medium trucks	-	84	-	40	none	-	-	Average (of DGAC and PCC)	0
3+305	3540	Heavy trucks	-	11	-	40	none	-	-	Average (of DGAC and PCC)	0
3+305	3540	Buses	-	2	-	40	none	-	-	Average (of DGAC and PCC)	0
3+305	3540	Motorcycles	-	2	-	40	none	-	-	Average (of DGAC and PCC)	0
3+305	3540	Auxiliary Vehicle	-	-	-	40	none	-	-	Average (of DGAC and PCC)	0
3+829	*3540*	*Total*	-	*236*	-	-	*none*	-	-	*Average (of DGAC and PCC)*	*0*
3+829	3540	Automobiles	-	137	-	40	none	-	-	Average (of DGAC and PCC)	0
3+829	3540	Medium trucks	-	84	-	40	none	-	-	Average (of DGAC and PCC)	0
3+829	3540	Heavy trucks	-	11	-	40	none	-	-	Average (of DGAC and PCC)	0
3+829	3540	Buses	-	2	-	40	none	-	-	Average (of DGAC and PCC)	0
3+829	3540	Motorcycles	-	2	-	40	none	-	-	Average (of DGAC and PCC)	0
3+829	3540	Auxiliary Vehicle	-	-	-	40	none	-	-	Average (of DGAC and PCC)	0
3+974	-						-	-	-	-	-
I-10 EB Ramp	**Traffic direction: In entry direction**										
7+811	*13995*	*Total*	-	*933*	-	-	*On ramp*	*0*	-	*Average (of DGAC and PCC)*	*0*
7+811	13995	Automobiles	-	544	-	64	On ramp	0	-	Average (of DGAC and PCC)	0
7+811	13995	Medium trucks	-	332	-	64	On ramp	0	-	Average (of DGAC and PCC)	0
7+811	13995	Heavy trucks	-	44	-	64	On ramp	0	-	Average (of DGAC and PCC)	0
7+811	13995	Buses	-	7	-	64	On ramp	0	-	Average (of DGAC and PCC)	0
7+811	13995	Motorcycles	-	6	-	64	On ramp	0	-	Average (of DGAC and PCC)	0
7+811	13995	Auxiliary Vehicle	-	-	-	64	On ramp	0	-	Average (of DGAC and PCC)	0
7+915	*13065*	*Total*	-	*871*	-	-	*On ramp*	*0*	-	*Average (of DGAC and PCC)*	*0*
7+915	13065	Automobiles	-	508	-	64	On ramp	0	-	Average (of DGAC and PCC)	0
7+915	13065	Medium trucks	-	310	-	64	On ramp	0	-	Average (of DGAC and PCC)	0
7+915	13065	Heavy trucks	-	41	-	64	On ramp	0	-	Average (of DGAC and PCC)	0

7+915		13065	Buses	-		6	-		64	On ramp	0	-	Average (of DGAC and PCC)	0
7+915		13065	Motorcycles	-		6	-		64	On ramp	0	-	Average (of DGAC and PCC)	0
7+915		13065	Auxiliary Vehicle	-	-	-			64	On ramp	0	-	Average (of DGAC and PCC)	0
8+109	-								-	-	-		-	-
I-10 EB Ramp 2	**Traffic direction: In entry direction**													
7+811		*21480*	*Total*	-		*1432*	-	-		*On ramp*	*0*	-	*Average (of DGAC and PCC)*	*0*
7+811		21480	Automobiles	-		836	-		64	On ramp	0	-	Average (of DGAC and PCC)	0
7+811		21480	Medium trucks	-		510	-		64	On ramp	0	-	Average (of DGAC and PCC)	0
7+811		21480	Heavy trucks	-		67	-		64	On ramp	0	-	Average (of DGAC and PCC)	0
7+811		21480	Buses	-		10	-		64	On ramp	0	-	Average (of DGAC and PCC)	0
7+811		21480	Motorcycles	-		9	-		64	On ramp	0	-	Average (of DGAC and PCC)	0
7+811		21480	Auxiliary Vehicle	-	-	-			64	On ramp	0	-	Average (of DGAC and PCC)	0
7+936		*19590*	*Total*	-		*1306*	-	-		*On ramp*	*0*	-	*Average (of DGAC and PCC)*	*0*
7+936		19590	Automobiles	-		762	-		64	On ramp	0	-	Average (of DGAC and PCC)	0
7+936		19590	Medium trucks	-		465	-		64	On ramp	0	-	Average (of DGAC and PCC)	0
7+936		19590	Heavy trucks	-		61	-		64	On ramp	0	-	Average (of DGAC and PCC)	0
7+936		19590	Buses	-		9	-		64	On ramp	0	-	Average (of DGAC and PCC)	0
7+936		19590	Motorcycles	-		9	-		64	On ramp	0	-	Average (of DGAC and PCC)	0
7+936		19590	Auxiliary Vehicle	-	-	-			64	On ramp	0	-	Average (of DGAC and PCC)	0
8+134	-								-	-	-		-	-
Olney St WB	**Traffic direction: In entry direction**													
7+811		*1530*	*Total*	-		*102*	-	-		*none*	-	-	*Average (of DGAC and PCC)*	*0*
7+811		1530	Automobiles	-		59	-		40	none	-	-	Average (of DGAC and PCC)	0
7+811		1530	Medium trucks	-		36	-		40	none	-	-	Average (of DGAC and PCC)	0
7+811		1530	Heavy trucks	-		5	-		40	none	-	-	Average (of DGAC and PCC)	0
7+811		1530	Buses	-		1	-		40	none	-	-	Average (of DGAC and PCC)	0
7+811		1530	Motorcycles	-		1	-		40	none	-	-	Average (of DGAC and PCC)	0
7+811		1530	Auxiliary Vehicle	-	-	-			40	none	-	-	Average (of DGAC and PCC)	0
7+923	-								-	-	-		-	-
I-10 WB Ramp	**Traffic direction: In entry direction**													
7+811		*465*	*Total*	-		*31*	-	-		*On ramp*	*0*	*100*	*Average (of DGAC and PCC)*	*0*
7+811		465	Automobiles	-		17	-		56	On ramp	0	100	Average (of DGAC and PCC)	0
7+811		465	Medium trucks	-		10	-		56	On ramp	0	100	Average (of DGAC and PCC)	0
7+811		465	Heavy trucks	-		2	-		56	On ramp	0	100	Average (of DGAC and PCC)	0
7+811		465	Buses	-		1	-		56	On ramp	0	100	Average (of DGAC and PCC)	0
7+811		465	Motorcycles	-		1	-		56	On ramp	0	100	Average (of DGAC and PCC)	0
7+811		465	Auxiliary Vehicle	-	-	-			56	On ramp	0	100	Average (of DGAC and PCC)	0
7+903	-								-	-	-		-	-

05360 Flair Spectrum Specific Plan
Year 2019 No Project
Receiver Spectra

No.	Name	Floor	Time slice	50 Hz	63 Hz	80 Hz	100 Hz	125 Hz	160 Hz	200 Hz	250 Hz	315 Hz	400 Hz	500 Hz	630 Hz	800 Hz	1 kHz	1 kHz	2 kHz	2 kHz	2 kHz	3 kHz	4 kHz	5 kHz	6 kHz	8 kHz	10 kHz
1	SE of Rosemead Boulevard at I-10	GF	Day	40.4	47.5	52	54.6	56.3	57.7	58.3	54.6	51.6	50.2	52.7	54.8	54.7	56.2	56.2	56.9	56.8	57.3	57.4	54.9	52.5	49.9	46.6	41.8
1	SE of Rosemead Boulevard at I-10	GF	Night	0	0	0	0	0	0	0	0	0	0	0	0	0	0	0	0	0	0	0	0	0	0	0	0
2	NE corner of Aerojet and Telstar	GF	Day	40.6	46.8	50.9	53.3	54.9	56.1	56.5	52.2	50.3	49	49.6	51.2	51.1	52.3	51.4	52.3	52	52.8	53.8	52.9	51.5	48.4	45.2	40.5
2	NE corner of Aerojet and Telstar	GF	Night	0	0	0	0	0	0	0	0	0	0	0	0	0	0	0	0	0	0	0	0	0	0	0	0
3	NE corner of Peck and Garvey	GF	Day	42.2	47.7	51.3	53.5	54.9	56.2	56.7	54.7	53.1	51.2	51.4	53.1	53	54.5	53.8	54.3	53.3	53.4	53.6	51.6	50.2	46.3	43.3	39.3
3	NE corner of Peck and Garvey	GF	Night	0	0	0	0	0	0	0	0	0	0	0	0	0	0	0	0	0	0	0	0	0	0	0	0
4	NE corner of Peck and Ramona	GF	Day	41.4	46.9	50.4	52.5	53.9	55.1	55.6	53.6	51.6	49.1	49.3	51.2	51.3	52.9	52.6	53.3	52.4	52.1	52.8	50.9	48.9	45.4	42.4	38.4
4	NE corner of Peck and Ramona	GF	Night	0	0	0	0	0	0	0	0	0	0	0	0	0	0	0	0	0	0	0	0	0	0	0	0
5	NE corner of Roseglen and Lower Azusa	GF	Day	37.4	42.6	46.1	48.1	49.4	50.6	51	49.3	46.8	43.3	42.9	45.2	45.9	47.9	47.9	49	48.4	47.9	48	47.1	44.6	41.5	38.6	34.7
5	NE corner of Roseglen and Lower Azusa	GF	Night	0	0	0	0	0	0	0	0	0	0	0	0	0	0	0	0	0	0	0	0	0	0	0	0
6	NE corner of Rosemead and Lower Azusa	GF	Day	41.3	47	50.7	52.9	54.4	55.6	56.2	55	53.5	51.2	50.9	52.9	53.3	55.1	54.4	55	53.9	53.6	53.2	51.3	49.5	45.8	42.9	38.9
6	NE corner of Rosemead and Lower Azusa	GF	Night	0	0	0	0	0	0	0	0	0	0	0	0	0	0	0	0	0	0	0	0	0	0	0	0
7	NE corner of Rosemead and Rush	GF	Day	40.1	45.8	49.5	51.7	53.2	54.4	54.9	53.1	50.9	47.8	47.6	49.9	50.5	52.5	52.4	53.4	52.6	52.3	52.3	50.6	48.8	45.3	42.3	38.3
7	NE corner of Rosemead and Rush	GF	Night	0	0	0	0	0	0	0	0	0	0	0	0	0	0	0	0	0	0	0	0	0	0	0	0
8	NE corner of Santa Anita and Valley	GF	Day	42.3	48	51.8	54	55.5	56.7	57.2	55.7	53.9	51.9	52	53.6	53.8	55.2	54.6	55.2	54.3	54.5	54.5	52.1	50.7	47.1	44.1	40
8	NE corner of Santa Anita and Valley	GF	Night	0	0	0	0	0	0	0	0	0	0	0	0	0	0	0	0	0	0	0	0	0	0	0	0
9	NE corner of Tyler and Valley	GF	Day	41.1	46.4	50.1	52.4	53.9	55	55.4	52.5	50.2	47.6	48.1	49.8	49.8	51.4	51.3	52.2	51.7	51.6	52.5	51.4	49	45.8	42.7	38.5
9	NE corner of Tyler and Valley	GF	Night	0	0	0	0	0	0	0	0	0	0	0	0	0	0	0	0	0	0	0	0	0	0	0	0
10	NE corner of Walnut Grove and Garvey	GF	Day	40	45.7	49.4	51.5	53	54.1	54.6	51.9	49.4	46	46.1	48.4	48.9	50.8	50.9	52	51.5	51.3	51.3	50.2	48.3	45.1	42.1	38
10	NE corner of Walnut Grove and Garvey	GF	Night	0	0	0	0	0	0	0	0	0	0	0	0	0	0	0	0	0	0	0	0	0	0	0	0
11	NE corner of Walnut Grove and Valley	GF	Day	40.5	46.2	49.8	52	53.4	54.6	55	52.7	50.4	47.4	47.4	49.6	50	51.9	51.8	52.7	52	51.6	52	50.6	48.5	45.3	42.3	38.2
11	NE corner of Walnut Grove and Valley	GF	Night	0	0	0	0	0	0	0	0	0	0	0	0	0	0	0	0	0	0	0	0	0	0	0	0
12	NE of San Gabriel at I-10	GF	Day	40.4	47	51.2	53.7	55.5	57	57.8	55.6	53.5	51.7	53.4	55.7	55.8	57.4	57.2	57.8	57	56.7	56	53.8	52.1	48.5	45.2	40.6
12	NE of San Gabriel at I-10	GF	Night	0	0	0	0	0	0	0	0	0	0	0	0	0	0	0	0	0	0	0	0	0	0	0	0
13	NW Corner of Aerojet and Telstar	GF	Day	41.9	48.1	52.3	54.7	56.3	57.6	58	55.3	53.6	52.4	53.1	54.5	54.2	55.2	54.2	55.1	54.6	54.9	55.6	54.3	52.6	49.7	46.5	42
13	NW Corner of Aerojet and Telstar	GF	Night	0	0	0	0	0	0	0	0	0	0	0	0	0	0	0	0	0	0	0	0	0	0	0	0
14	NW corner of Baldwin and Olive	GF	Day	37.2	42.3	45.7	47.7	49	50.1	50.4	47.8	45.1	41.5	41.6	43.9	44.4	46.3	46.4	47.6	47.3	47.1	47	46.4	44.3	41.2	38.2	34.4
14	NW corner of Baldwin and Olive	GF	Night	0	0	0	0	0	0	0	0	0	0	0	0	0	0	0	0	0	0	0	0	0	0	0	0
15	NW corner of Glendon and Rosemead	GF	Day	43.3	49.3	53.2	55.5	57.1	58.5	59.2	57.6	56.4	55.1	55.6	57.2	57.1	58.4	57.3	57.8	56.8	56.4	56.3	54.8	53	49.8	46.6	42.2
15	NW corner of Glendon and Rosemead	GF	Night	0	0	0	0	0	0	0	0	0	0	0	0	0	0	0	0	0	0	0	0	0	0	0	0
16	NW corner of Merced and Garvey	GF	Day	38.9	44.5	48.2	50.4	51.9	53	53.3	49	46.3	42.9	43.3	45.5	45.9	47.7	47.8	49	48.9	49.2	49.2	47.8	46.8	43.4	40.4	36.3
16	NW corner of Merced and Garvey	GF	Night	0	0	0	0	0	0	0	0	0	0	0	0	0	0	0	0	0	0	0	0	0	0	0	0
17	NW corner of Peck and Lower Azusa	GF	Day	39.9	45.2	48.6	50.7	52	53.1	53.5	51.4	48.8	45.6	46	48.1	48.4	50.2	50.2	51.3	51	50.7	50.4	50	47.7	44.6	41.6	37.7
17	NW corner of Peck and Lower Azusa	GF	Night	0	0	0	0	0	0	0	0	0	0	0	0	0	0	0	0	0	0	0	0	0	0	0	0
18	NW corner of Rio Hondo and Telstar	GF	Day	40	45.9	49.8	52.2	53.8	55.1	55.5	51.6	50.9	50.5	51.3	52.6	51.9	52.9	51.4	51.4	50.1	50.7	51.7	50.8	49.9	46.8	43.6	39.2
18	NW corner of Rio Hondo and Telstar	GF	Night	0	0	0	0	0	0	0	0	0	0	0	0	0	0	0	0	0	0	0	0	0	0	0	0
19	NW corner of San Gabriel and Valley	GF	Day	42	47.4	50.9	52.9	54.4	55.6	56.2	55	53.3	51.1	50.9	52.7	52.9	54.5	53.7	54.5	53.6	53.2	53	51.1	50	46	43.1	39.2
19	NW corner of San Gabriel and Valley	GF	Night	0	0	0	0	0	0	0	0	0	0	0	0	0	0	0	0	0	0	0	0	0	0	0	0
20	NW corner of Tyler and Garvey	GF	Day	42.2	47.3	50.7	52.8	54.2	55.4	55.8	53.1	51	48.7	48.9	50.6	50.6	52.1	51.6	52.3	51.6	51.8	52.2	50.9	49.4	45.8	42.8	38.8
20	NW corner of Tyler and Garvey	GF	Night	0	0	0	0	0	0	0	0	0	0	0	0	0	0	0	0	0	0	0	0	0	0	0	0
21	NW corner of Tyler and Ramona	GF	Day	40.9	46.2	49.8	52	53.5	54.7	55	50.6	48.7	47.2	48.2	49.7	48.9	50.1	49.5	50.1	49.6	50.3	51.5	50.1	49.1	45.7	42.6	38.2
21	NW corner of Tyler and Ramona	GF	Night	0	0	0	0	0	0	0	0	0	0	0	0	0	0	0	0	0	0	0	0	0	0	0	0
22	NW corner of Valley and Garvey	GF	Day	41.1	46.7	50.4	52.6	54.1	55.3	55.8	53.2	51.4	49.3	49.3	51.1	51.4	53	52.3	53.1	52.5	52.5	52.3	51	50.1	46.3	43.3	39
22	NW corner of Valley and Garvey	GF	Night	0	0	0	0	0	0	0	0	0	0	0	0	0	0	0	0	0	0	0	0	0	0	0	0
23	NW of Santa Anita at I-10	GF	Day	42.3	48.9	53.2	55.7	57.5	59.1	60	58.3	56.8	55.5	57.3	59.4	59.2	60.7	60.3	60.7	59.7	58.9	57.8	55.9	54.2	50.5	47.2	42.6
23	NW of Santa Anita at I-10	GF	Night	0	0	0	0	0	0	0	0	0	0	0	0	0	0	0	0	0	0	0	0	0	0	0	0
24	SE corner of Aerojet and Flair	GF	Day	41.4	48.1	52.4	55	56.8	58.4	59.2	57.3	55.9	55.2	57.3	59.3	58.7	60	59.5	59.7	58.7	57.9	56.9	55.1	53.6	50.1	46.7	42.1

24	SE corner of Aerojet and Flair	GF	Night	0	0	0	0	0	0	0	0	0	0	0	0	0	0	0	0	0	0	0	0	0	0	0
25	SE corner of Baldwin and Valley	GF	Day	40.8	46.9	50.9	53.3	54.8	56	56.3	53.6	51.2	48.3	48.3	50.4	50.9	52.6	52.6	53.6	53.2	53.2	53.6	51.8	50.4	46.7	43.6	39.3
25	SE corner of Baldwin and Valley	GF	Night	0	0	0	0	0	0	0	0	0	0	0	0	0	0	0	0	0	0	0	0	0	0	0	0
26	SE corner of Chico and Garvey	GF	Day	40.3	45.8	49.4	51.5	52.9	54.1	54.5	52.1	50.3	47.8	47.6	49.5	49.8	51.5	51	51.7	50.6	50.7	51.2	49.1	47.5	44	41	37.1
26	SE corner of Chico and Garvey	GF	Night	0	0	0	0	0	0	0	0	0	0	0	0	0	0	0	0	0	0	0	0	0	0	0	0
27	SE corner of Rosemead and Garvey	GF	Day	41.8	47.6	51.3	53.5	55	56.2	56.6	54.5	52.5	50.1	50.3	52.2	52.4	54	53.6	54.5	53.9	54.2	53.8	52	50.8	47.2	44.2	40.1
27	SE corner of Rosemead and Garvey	GF	Night	0	0	0	0	0	0	0	0	0	0	0	0	0	0	0	0	0	0	0	0	0	0	0	0
28	SE corner of Temple City at Loftus	GF	Day	42.5	48.1	52	54.2	55.9	57.2	57.8	55.1	53.4	52.4	53.8	55.5	54.9	56	55.2	55.6	55	55.3	55.7	53.7	52	48.5	45.3	40.8
28	SE corner of Temple City at Loftus	GF	Night	0	0	0	0	0	0	0	0	0	0	0	0	0	0	0	0	0	0	0	0	0	0	0	0
29	SE corner of Temple City at Valley	GF	Day	40.8	46.6	50.5	52.7	54.2	55.3	55.7	53.1	50.8	47.8	48	50	50.3	52.1	52.1	53.1	52.6	52.5	52.8	51.6	49.7	46.3	43.2	39
29	SE corner of Temple City at Valley	GF	Night	0	0	0	0	0	0	0	0	0	0	0	0	0	0	0	0	0	0	0	0	0	0	0	0
30	South of Santa Anita at Tyler	GF	Day	42.3	47.1	50.3	52.3	53.6	54.7	55.1	53.3	51.1	48.3	48.1	50	50.3	52	51.8	52.6	51.8	51.7	52.3	50.6	48.3	45	42.1	38.4
30	South of Santa Anita at Tyler	GF	Night	0	0	0	0	0	0	0	0	0	0	0	0	0	0	0	0	0	0	0	0	0	0	0	0
31	SW corner of Baldwin and Lower Azusa	GF	Day	41	46.5	50.1	52.2	53.6	54.7	55.2	53.6	51.6	48.9	48.6	50.6	51.2	53	52.6	53.3	52.2	52.1	52.6	50.5	48.7	45	42	38.1
31	SW corner of Baldwin and Lower Azusa	GF	Night	0	0	0	0	0	0	0	0	0	0	0	0	0	0	0	0	0	0	0	0	0	0	0	0
32	SW corner of Durfee and Ramona	GF	Day	38.7	44	47.4	49.5	50.9	52.1	52.6	50.9	48.9	46.2	45.8	47.8	48.3	50.1	49.7	50.4	49.4	49.4	49.7	47.5	45.8	42.4	39.5	35.6
32	SW corner of Durfee and Ramona	GF	Night	0	0	0	0	0	0	0	0	0	0	0	0	0	0	0	0	0	0	0	0	0	0	0	0
33	SW corner of Fletcher and Flair	GF	Day	42.3	48.9	53.2	55.8	57.7	59.4	60.4	59.6	59.2	59.1	60.9	62.7	61.9	62.9	62.1	61.9	60.5	59.1	58.1	56	53.6	50.6	47.3	42.8
33	SW corner of Fletcher and Flair	GF	Night	0	0	0	0	0	0	0	0	0	0	0	0	0	0	0	0	0	0	0	0	0	0	0	0
34	SW corner of Gilman and Ramona	GF	Day	39.2	44.5	47.9	49.9	51.3	52.5	53.1	52	50.2	47.8	47.3	49.1	49.6	51.4	50.7	51.4	50.3	50.4	50.1	48	46.4	42.5	39.6	35.9
34	SW corner of Gilman and Ramona	GF	Night	0	0	0	0	0	0	0	0	0	0	0	0	0	0	0	0	0	0	0	0	0	0	0	0
35	SW corner of Merced and Garvey	GF	Day	38.8	44.4	48	50.2	51.6	52.7	53	49.2	46.6	43.4	43.8	45.9	46.1	47.9	48	49.1	48.9	49.1	49.1	47.6	46.6	43.1	40.1	36.1
35	SW corner of Merced and Garvey	GF	Night	0	0	0	0	0	0	0	0	0	0	0	0	0	0	0	0	0	0	0	0	0	0	0	0
36	SW corner of Peck and Garvey	GF	Day	42	47.5	51	53.2	54.6	55.9	56.4	54.7	53.2	51.4	51.7	53.3	53.2	54.5	53.7	54.2	53.2	53.1	53	51.2	49.8	46.1	43.1	39.2
36	SW corner of Peck and Garvey	GF	Night	0	0	0	0	0	0	0	0	0	0	0	0	0	0	0	0	0	0	0	0	0	0	0	0
37	SW corner of Rio Hondo and Flair	GF	Day	40.7	47.4	51.8	54.4	56.2	57.8	58.6	56.4	54.9	54.3	56.7	58.6	58	59.1	58.7	58.9	58	57.3	56.3	54.2	52.9	49.3	46	41.3
37	SW corner of Rio Hondo and Flair	GF	Night	0	0	0	0	0	0	0	0	0	0	0	0	0	0	0	0	0	0	0	0	0	0	0	0
38	SW corner of Rosemead and Las Tunas Dr	GF	Day	40.7	46	49.5	51.6	53	54.1	54.6	52.9	50.6	47.5	47.7	49.8	50.2	52.1	52	53	52.4	52	52	51	48.7	45.5	42.5	38.6
38	SW corner of Rosemead and Las Tunas Dr	GF	Night	0	0	0	0	0	0	0	0	0	0	0	0	0	0	0	0	0	0	0	0	0	0	0	0
39	SW corner of Rosemead and Valley	GF	Day	42.6	48.4	52.1	54.2	55.7	57	57.6	56.3	54.7	52.6	52.6	54.4	54.6	56.3	55.6	56.1	54.9	54.8	54.7	52.4	50.8	47.1	44.1	40.1
39	SW corner of Rosemead and Valley	GF	Night	0	0	0	0	0	0	0	0	0	0	0	0	0	0	0	0	0	0	0	0	0	0	0	0
40	SW corner of Santa Anita and Garvey	GF	Day	41.3	46.8	50.3	52.5	53.9	55.1	55.5	53.2	51.1	48.6	48.9	50.7	50.8	52.5	52.2	53	52.1	51.9	52.4	50.9	48.7	45.3	42.3	38.3
40	SW corner of Santa Anita and Garvey	GF	Night	0	0	0	0	0	0	0	0	0	0	0	0	0	0	0	0	0	0	0	0	0	0	0	0
41	SW corner of Santa Anita and Lower Azusa	GF	Day	41.8	46.7	49.9	51.8	53.1	54.2	54.7	53.2	51.1	48.3	48	49.9	50.4	52.1	51.6	52.4	51.6	51.8	51.8	50.3	48.3	44.8	41.9	38.3
41	SW corner of Santa Anita and Lower Azusa	GF	Night	0	0	0	0	0	0	0	0	0	0	0	0	0	0	0	0	0	0	0	0	0	0	0	0
42	SW corner of Telstar and Flair	GF	Day	42.8	49.2	53.5	56	57.8	59.5	60.5	59.6	59	58.7	60.5	62.4	61.6	62.6	61.8	61.7	60.3	59	58	56.1	53.8	50.6	47.4	43
42	SW corner of Telstar and Flair	GF	Night	0	0	0	0	0	0	0	0	0	0	0	0	0	0	0	0	0	0	0	0	0	0	0	0
43	SW corner of Temple City and Lower Azusa	GF	Day	39.1	45.1	49	51.3	52.8	53.9	54.3	51.5	48.8	45.4	45.6	47.9	48.4	50.3	50.4	51.7	51.5	51.6	51.6	50.3	48.9	45.4	42.3	38.1
43	SW corner of Temple City and Lower Azusa	GF	Night	0	0	0	0	0	0	0	0	0	0	0	0	0	0	0	0	0	0	0	0	0	0	0	0
44	SW of Peck at I-10	GF	Day	41.6	48.2	52.5	55	56.8	58.4	59.2	57.2	55.6	54.2	56	58.2	58.1	59.6	59.3	59.8	58.9	58.1	57.1	55.5	53.6	50.2	46.9	42.2
44	SW of Peck at I-10	GF	Night	0	0	0	0	0	0	0	0	0	0	0	0	0	0	0	0	0	0	0	0	0	0	0	0
45	SW of Santa Anita at I-10	GF	Day	41.2	47.7	52	54.4	56.2	57.7	58.4	55.8	53.7	52.5	54.7	56.8	56.5	57.8	57.6	58.1	57.5	57.2	56.6	54.3	52.6	49.2	45.9	41.3
45	SW of Santa Anita at I-10	GF	Night	0	0	0	0	0	0	0	0	0	0	0	0	0	0	0	0	0	0	0	0	0	0	0	0

05360 Flair Spectrum Specific Plan
Year 2019 No Project
Receivers

No.	Receiver name	Floor	Level Day dB(A)
1	SE of Rosemead Boulevard at I-10	GF	68.5
2	NE corner of Aerojet and Telstar	GF	65.8
3	NE corner of Peck and Garvey	GF	66.6
4	NE corner of Peck and Ramona	GF	65.4
5	NE corner of Roseglen and Lower Azusa	GF	60.8
6	NE corner of Rosemead and Lower Azusa	GF	66.6
7	NE corner of Rosemead and Rush	GF	64.9
8	NE corner of Santa Anita and Valley	GF	67.3
9	NE corner of Tyler and Valley	GF	64.8
10	NE corner of Walnut Grove and Garvey	GF	64
11	NE corner of Walnut Grove and Valley	GF	64.7
12	NE of San Gabriel at I-10	GF	68.6
13	NW Corner of Aerojet and Telstar	GF	67.9
14	NW corner of Baldwin and Olive	GF	59.9
15	NW corner of Glendon and Rosemead	GF	69.7
16	NW corner of Merced and Garvey	GF	62.1
17	NW corner of Peck and Lower Azusa	GF	63.3
18	NW corner of Rio Hondo and Telstar	GF	65.1
19	NW corner of San Gabriel and Valley	GF	66.4
20	NW corner of Tyler and Garvey	GF	65.2
21	NW corner of Tyler and Ramona	GF	64
22	NW corner of Valley and Garvey	GF	65.5
23	NW of Santa Anita at I-10	GF	71.3
24	SE corner of Aerojet and Flair	GF	70.5
25	SE corner of Baldwin and Valley	GF	65.8
26	SE corner of Chico and Garvey	GF	64
27	SE corner of Rosemead and Garvey	GF	66.5
28	SE corner of Temple City at Loftus	GF	68
29	SE corner of Temple City at Valley	GF	65.3
30	South of Santa Anita at Tyler	GF	64.9
31	SW corner of Baldwin and Lower Azusa	GF	65.2
32	SW corner of Durfee and Ramona	GF	62.4
33	SW corner of Fletcher and Flair	GF	72.8
34	SW corner of Gilman and Ramona	GF	63.2
35	SW corner of Merced and Garvey	GF	62
36	SW corner of Peck and Garvey	GF	66.5

37	SW corner of Rio Hondo and Flair	GF	69.8
38	SW corner of Rosemead and Las Tunas Dr	GF	64.7
39	SW corner of Rosemead and Valley	GF	67.8
40	SW corner of Santa Anita and Garvey	GF	65.2
41	SW corner of Santa Anita and Lower Azusa	GF	64.6
42	SW corner of Telstar and Flair	GF	72.6
43	SW corner of Temple City and Lower Azusa	GF	63.8
44	SW of Peck at I-10	GF	70.3
45	SW of Santa Anita at I-10	GF	69.1

05360 Flair Spectrum Specific Plan
Year 2019 Plus Project Buildout
Contributions

Source name			Level Day dB(A)
SE of Rosemead Boulevard at I-10	GF	68.7	
Aerojet Ave NB			43.3
Aerojet Ave SB			43.4
Baldwin Ave NB			35.7
Baldwin Ave SB			34.3
Chico Ave SB			24
Durfee Ave NB			0
Durfee Ave NB (South)			0
Durfee Ave SB (South)			0
Flair Dr EB			41
Flair Dr WB			40.4
Fletcher Ave NB			10.1
Fletcher Ave SB			9.6
Garvey Ave EB			42.6
Garvey Ave WB			42
Gilman Rd NB			0
Gilman Rd SB			0
Glendon Way EB			41.4
Glendon Way WB			39.5
I-10 EB			64.4
I-10 EB Ramp			44.5
I-10 EB Ramp 2			54
I-10 WB			62.8
I-10 WB Ramp			18.8
Las Tunas Dr EB			26.4
Las Tunas Dr WB			26.2
Loftus Dr EB			27.3
Loftus Dr WB			29.6
Lower Azusa Rd EB			33.3
Lower Azusa Rd WB			33.3
Merced Ave NB			12.3
Merced Ave NB			24.4
Merced Ave SB			25.7
Olive St EB			15.6
Olive St WB			15.2
Olney St WB			13

Peck Rd NB			21.3
Peck Rd SB			21.2
Ramona Blvd EB			17.9
Ramona Blvd WB			18.2
Rio Hondo Ave NB			37.3
Rio Hondo Ave SB			32.9
Roseglen St NB			0
Roseglen St NB1			0
Roseglen St SB			0
Rosemead Blvd NB			60.4
Rosemead Blvd SB			59.7
Rush St EB			28.7
Rush St WB			23.8
San Gabriel Blvd NB			34.5
San Gabriel Blvd SB			35
Santa Anita Ave NB			30.9
Santa Anita Ave SB			31.2
Telstar Ave EB			53.1
Telstar Ave WB			46.3
Temple City Blvd NB			37.3
Temple City Blvd SB			36.3
Tyler Ave NB			25.1
Tyler Ave SB			27.3
Valley Blvd EB			40.8
Valley Blvd WB			41.2
Valley Mall NB			13.7
Valley Mall SB			11.5
Walnut Grove NB			40.6
Walnut Grove SB			40.1
Whitmore St			38
Eastern Residential Tower (north west)	GF	53.6	
Aerojet Ave NB			12.4
Aerojet Ave SB			11.7
Baldwin Ave NB			23.3
Baldwin Ave SB			23.2
Chico Ave SB			11.1
Durfee Ave NB			0
Durfee Ave NB (South)			0
Durfee Ave SB (South)			0
Flair Dr EB			36.9
Flair Dr WB			36.6
Fletcher Ave NB			15.7
Fletcher Ave SB			15.2

Garvey Ave EB	34.9
Garvey Ave WB	34.5
Gilman Rd NB	0
Gilman Rd SB	0
Glendon Way EB	26.6
Glendon Way WB	24.9
I-10 EB	49.6
I-10 EB Ramp	6.7
I-10 EB Ramp 2	9.5
I-10 WB	48.4
I-10 WB Ramp	-17.5
Las Tunas Dr EB	19
Las Tunas Dr WB	18.4
Loftus Dr EB	-4.6
Loftus Dr WB	-1.9
Lower Azusa Rd EB	24.5
Lower Azusa Rd WB	24.3
Merced Ave NB	2.7
Merced Ave NB	-1.7
Merced Ave SB	-0.5
Olive St EB	0.5
Olive St WB	0.1
Olney St WB	-22.9
Peck Rd NB	14.2
Peck Rd SB	15.5
Ramona Blvd EB	8
Ramona Blvd WB	8.5
Rio Hondo Ave NB	34.9
Rio Hondo Ave SB	31
Roseglen St NB	0
Roseglen St NB1	0
Roseglen St SB	0
Rosemead Blvd NB	41.6
Rosemead Blvd SB	41
Rush St EB	20
Rush St WB	15.1
San Gabriel Blvd NB	22
San Gabriel Blvd SB	22.5
Santa Anita Ave NB	21
Santa Anita Ave SB	20.9
Telstar Ave EB	37.2
Telstar Ave WB	37.1
Temple City Blvd NB	17.8

Temple City Blvd SB			20.9
Tyler Ave NB			15.4
Tyler Ave SB			18.8
Valley Blvd EB			32.9
Valley Blvd WB			33.5
Valley Mall NB			9.5
Valley Mall SB			7.2
Walnut Grove NB			25.8
Walnut Grove SB			25.6
Whitmore St			32
NE corner of Aerojet and Telstar	GF	67.7	
Aerojet Ave NB			54.7
Aerojet Ave SB			53.7
Baldwin Ave NB			34.7
Baldwin Ave SB			32.6
Chico Ave SB			26.4
Durfee Ave NB			0
Durfee Ave NB (South)			0
Durfee Ave SB (South)			0
Flair Dr EB			41.9
Flair Dr WB			41.2
Fletcher Ave NB			16.9
Fletcher Ave SB			16.7
Garvey Ave EB			44.3
Garvey Ave WB			43.8
Gilman Rd NB			0
Gilman Rd SB			0
Glendon Way EB			35.2
Glendon Way WB			33.4
I-10 EB			56.8
I-10 EB Ramp			34.2
I-10 EB Ramp 2			38.6
I-10 WB			55.6
I-10 WB Ramp			6.8
Las Tunas Dr EB			22.9
Las Tunas Dr WB			22
Loftus Dr EB			20.7
Loftus Dr WB			23.2
Lower Azusa Rd EB			32.9
Lower Azusa Rd WB			33
Merced Ave NB			14.8
Merced Ave NB			26.1
Merced Ave SB			27.5

Olive St EB			15.4
Olive St WB			15
Olney St WB			3.8
Peck Rd NB			27.2
Peck Rd SB			27.7
Ramona Blvd EB			19.7
Ramona Blvd WB			18.2
Rio Hondo Ave NB			41.6
Rio Hondo Ave SB			37.4
Roseglen St NB			0
Roseglen St NB1			0
Roseglen St SB			0
Rosemead Blvd NB			56.9
Rosemead Blvd SB			56.6
Rush St EB			30
Rush St WB			25.1
San Gabriel Blvd NB			33
San Gabriel Blvd SB			33.5
Santa Anita Ave NB			30.6
Santa Anita Ave SB			31.3
Telstar Ave EB			62.4
Telstar Ave WB			62
Temple City Blvd NB			36.9
Temple City Blvd SB			35.6
Tyler Ave NB			26.8
Tyler Ave SB			25.2
Valley Blvd EB			39.1
Valley Blvd WB			39.6
Valley Mall NB			-1
Valley Mall SB			-3.1
Walnut Grove NB			38.6
Walnut Grove SB			38.1
Whitmore St			44.5
NE corner of Peck and Garvey	GF	66.7	
Aerojet Ave NB			12.8
Aerojet Ave SB			12.6
Baldwin Ave NB			32.8
Baldwin Ave SB			32.2
Chico Ave SB			17.7
Durfee Ave NB			15.2
Durfee Ave NB (South)			0
Durfee Ave SB (South)			19.3
Flair Dr EB			23.9

Flair Dr WB	24.3
Fletcher Ave NB	9.5
Fletcher Ave SB	9
Garvey Ave EB	58.6
Garvey Ave WB	60.2
Gilman Rd NB	14.1
Gilman Rd SB	19
Glendon Way EB	-9.1
Glendon Way WB	3.5
I-10 EB	54.4
I-10 EB Ramp	0
I-10 EB Ramp 2	9.2
I-10 WB	53.9
I-10 WB Ramp	8.9
Las Tunas Dr EB	0
Las Tunas Dr WB	0
Loftus Dr EB	21.1
Loftus Dr WB	23.7
Lower Azusa Rd EB	33
Lower Azusa Rd WB	32.8
Merced Ave NB	6.1
Merced Ave NB	24.7
Merced Ave SB	25.9
Olive St EB	0
Olive St WB	0
Olney St WB	3
Peck Rd NB	60.1
Peck Rd SB	60.6
Ramona Blvd EB	38.2
Ramona Blvd WB	38.5
Rio Hondo Ave NB	14.4
Rio Hondo Ave SB	10.7
Roseglen St NB	13.9
Roseglen St NB1	10.5
Roseglen St SB	9.3
Rosemead Blvd NB	33.3
Rosemead Blvd SB	33
Rush St EB	24.9
Rush St WB	19.9
San Gabriel Blvd NB	0
San Gabriel Blvd SB	0
Santa Anita Ave NB	39.4
Santa Anita Ave SB	39.8

Telstar Ave EB			27.2
Telstar Ave WB			23.7
Temple City Blvd NB			30.2
Temple City Blvd SB			28.7
Tyler Ave NB			42.9
Tyler Ave SB			41.7
Valley Blvd EB			45.2
Valley Blvd WB			44.3
Valley Mall NB			24.4
Valley Mall SB			22.3
Walnut Grove NB			0
Walnut Grove SB			0
Whitmore St			20.8
NE corner of Peck and Ramona	GF	65.4	
Aerojet Ave NB			0
Aerojet Ave SB			0
Baldwin Ave NB			32.7
Baldwin Ave SB			31.2
Chico Ave SB			14.2
Durfee Ave NB			20.3
Durfee Ave NB (South)			0
Durfee Ave SB (South)			24.7
Flair Dr EB			22
Flair Dr WB			22.2
Fletcher Ave NB			7.2
Fletcher Ave SB			6.7
Garvey Ave EB			37.6
Garvey Ave WB			38
Gilman Rd NB			18.5
Gilman Rd SB			23.4
Glendon Way EB			0
Glendon Way WB			0
I-10 EB			49.9
I-10 EB Ramp			0
I-10 EB Ramp 2			0
I-10 WB			50.1
I-10 WB Ramp			7
Las Tunas Dr EB			0
Las Tunas Dr WB			0
Loftus Dr EB			20
Loftus Dr WB			22.3
Lower Azusa Rd EB			37.3
Lower Azusa Rd WB			37.1

Merced Ave NB			2.6
Merced Ave NB			20.3
Merced Ave SB			21.5
Olive St EB			15.2
Olive St WB			14.8
Olney St WB			1.1
Peck Rd NB			60.7
Peck Rd SB			59.1
Ramona Blvd EB			57.5
Ramona Blvd WB			58.1
Rio Hondo Ave NB			11.4
Rio Hondo Ave SB			7.8
Roseglen St NB			18.9
Roseglen St NB1			15.7
Roseglen St SB			14.3
Rosemead Blvd NB			0
Rosemead Blvd SB			0
Rush St EB			0
Rush St WB			0
San Gabriel Blvd NB			0
San Gabriel Blvd SB			0
Santa Anita Ave NB			37.8
Santa Anita Ave SB			38.1
Telstar Ave EB			19
Telstar Ave WB			18.1
Temple City Blvd NB			30.3
Temple City Blvd SB			28.6
Tyler Ave NB			37.8
Tyler Ave SB			39.7
Valley Blvd EB			42.7
Valley Blvd WB			42
Valley Mall NB			24.2
Valley Mall SB			22.1
Walnut Grove NB			0
Walnut Grove SB			0
Whitmore St			0
NE corner of Roseglen and Lower Azusa	GF	60.8	
Aerojet Ave NB			0
Aerojet Ave SB			0
Baldwin Ave NB			0
Baldwin Ave SB			0
Chico Ave SB			0
Durfee Ave NB			40.5

Durfee Ave NB (South)	0
Durfee Ave SB (South)	22.7
Flair Dr EB	0
Flair Dr WB	0
Fletcher Ave NB	0
Fletcher Ave SB	0
Garvey Ave EB	25.8
Garvey Ave WB	26.3
Gilman Rd NB	19.5
Gilman Rd SB	24.3
Glendon Way EB	0
Glendon Way WB	0
I-10 EB	37.2
I-10 EB Ramp	0
I-10 EB Ramp 2	0
I-10 WB	37.8
I-10 WB Ramp	0
Las Tunas Dr EB	0
Las Tunas Dr WB	0
Loftus Dr EB	0
Loftus Dr WB	0
Lower Azusa Rd EB	56.9
Lower Azusa Rd WB	57.6
Merced Ave NB	0
Merced Ave NB	0
Merced Ave SB	0
Olive St EB	0
Olive St WB	0
Olney St WB	0
Peck Rd NB	38.6
Peck Rd SB	37.9
Ramona Blvd EB	36.2
Ramona Blvd WB	36.2
Rio Hondo Ave NB	0
Rio Hondo Ave SB	0
Roseglen St NB	48.7
Roseglen St NB1	35.7
Roseglen St SB	42.9
Rosemead Blvd NB	0
Rosemead Blvd SB	0
Rush St EB	0
Rush St WB	0
San Gabriel Blvd NB	0

San Gabriel Blvd SB			0
Santa Anita Ave NB			28.5
Santa Anita Ave SB			28.5
Telstar Ave EB			0
Telstar Ave WB			0
Temple City Blvd NB			0
Temple City Blvd SB			0
Tyler Ave NB			30.2
Tyler Ave SB			32.5
Valley Blvd EB			30.9
Valley Blvd WB			30
Valley Mall NB			14.2
Valley Mall SB			12.1
Walnut Grove NB			0
Walnut Grove SB			0
Whitmore St			0
NE corner of Rosemead and Lower Azusa	GF	66.6	
Aerojet Ave NB			21.5
Aerojet Ave SB			21.4
Baldwin Ave NB			36.2
Baldwin Ave SB			35
Chico Ave SB			14.8
Durfee Ave NB			0
Durfee Ave NB (South)			0
Durfee Ave SB (South)			0
Flair Dr EB			28.5
Flair Dr WB			28.2
Fletcher Ave NB			12.2
Fletcher Ave SB			11.7
Garvey Ave EB			33.3
Garvey Ave WB			32.7
Gilman Rd NB			0
Gilman Rd SB			0
Glendon Way EB			28
Glendon Way WB			26.4
I-10 EB			45.1
I-10 EB Ramp			22.3
I-10 EB Ramp 2			24
I-10 WB			44.5
I-10 WB Ramp			12.3
Las Tunas Dr EB			33.3
Las Tunas Dr WB			33
Loftus Dr EB			23.4

Loftus Dr WB			25.8
Lower Azusa Rd EB			55.5
Lower Azusa Rd WB			56.1
Merced Ave NB			2.7
Merced Ave NB			19.3
Merced Ave SB			20.6
Olive St EB			20.2
Olive St WB			19.8
Olney St WB			6.6
Peck Rd NB			0
Peck Rd SB			0
Ramona Blvd EB			19.9
Ramona Blvd WB			20.5
Rio Hondo Ave NB			23.4
Rio Hondo Ave SB			19.6
Roseglen St NB			0
Roseglen St NB1			0
Roseglen St SB			0
Rosemead Blvd NB			63.3
Rosemead Blvd SB			61.9
Rush St EB			19.7
Rush St WB			14.7
San Gabriel Blvd NB			33.4
San Gabriel Blvd SB			34
Santa Anita Ave NB			30.8
Santa Anita Ave SB			31.1
Telstar Ave EB			32
Telstar Ave WB			27.5
Temple City Blvd NB			38.8
Temple City Blvd SB			37.1
Tyler Ave NB			24.5
Tyler Ave SB			27
Valley Blvd EB			42.8
Valley Blvd WB			43.4
Valley Mall NB			14.5
Valley Mall SB			12.3
Walnut Grove NB			37.8
Walnut Grove SB			37.7
Whitmore St			24
NE corner of Rosemead and Rush	GF	64.9	
Aerojet Ave NB			21.6
Aerojet Ave SB			21.5
Baldwin Ave NB			30.9

Baldwin Ave SB	29.5
Chico Ave SB	30
Durfee Ave NB	0
Durfee Ave NB (South)	0
Durfee Ave SB (South)	0
Flair Dr EB	27.5
Flair Dr WB	27.4
Fletcher Ave NB	13.6
Fletcher Ave SB	13.1
Garvey Ave EB	41.6
Garvey Ave WB	41.2
Gilman Rd NB	0
Gilman Rd SB	0
Glendon Way EB	23.1
Glendon Way WB	21.3
I-10 EB	44.2
I-10 EB Ramp	19.8
I-10 EB Ramp 2	22.2
I-10 WB	43.5
I-10 WB Ramp	11.7
Las Tunas Dr EB	0
Las Tunas Dr WB	0
Loftus Dr EB	21.8
Loftus Dr WB	24.3
Lower Azusa Rd EB	23.6
Lower Azusa Rd WB	23.4
Merced Ave NB	18.4
Merced Ave NB	27
Merced Ave SB	28.4
Olive St EB	0
Olive St WB	0
Olney St WB	5.7
Peck Rd NB	27.7
Peck Rd SB	28.1
Ramona Blvd EB	23.4
Ramona Blvd WB	23.9
Rio Hondo Ave NB	24.4
Rio Hondo Ave SB	20.5
Roseglen St NB	0
Roseglen St NB1	0
Roseglen St SB	0
Rosemead Blvd NB	62
Rosemead Blvd SB	60.1

Rush St EB			54.3
Rush St WB			50.5
San Gabriel Blvd NB			27.9
San Gabriel Blvd SB			28.6
Santa Anita Ave NB			32.4
Santa Anita Ave SB			32.8
Telstar Ave EB			34.2
Telstar Ave WB			30.1
Temple City Blvd NB			30.8
Temple City Blvd SB			29.5
Tyler Ave NB			27.8
Tyler Ave SB			27.7
Valley Blvd EB			34.5
Valley Blvd WB			34.4
Valley Mall NB			15
Valley Mall SB			12.9
Walnut Grove NB			33.6
Walnut Grove SB			33.1
Whitmore St			30.3
NE corner of Santa Anita and Valley	GF	67.4	
Aerojet Ave NB			14.8
Aerojet Ave SB			14.7
Baldwin Ave NB			40.4
Baldwin Ave SB			38.6
Chico Ave SB			18.5
Durfee Ave NB			14.8
Durfee Ave NB (South)			0
Durfee Ave SB (South)			16.7
Flair Dr EB			29.3
Flair Dr WB			29.4
Fletcher Ave NB			13.3
Fletcher Ave SB			12.8
Garvey Ave EB			38.2
Garvey Ave WB			38.5
Gilman Rd NB			11.7
Gilman Rd SB			16.6
Glendon Way EB			20.5
Glendon Way WB			18.9
I-10 EB			50.7
I-10 EB Ramp			16.2
I-10 EB Ramp 2			18.7
I-10 WB			50.1
I-10 WB Ramp			13.5

Las Tunas Dr EB		10.4
Las Tunas Dr WB		0
Loftus Dr EB		27.4
Loftus Dr WB		30.1
Lower Azusa Rd EB		38.3
Lower Azusa Rd WB		38
Merced Ave NB		6.9
Merced Ave NB		25.5
Merced Ave SB		26.7
Olive St EB		18.9
Olive St WB		18.5
Olney St WB		7.7
Peck Rd NB		39.2
Peck Rd SB		38.9
Ramona Blvd EB		40.1
Ramona Blvd WB		40.8
Rio Hondo Ave NB		13.9
Rio Hondo Ave SB		10.4
Roseglen St NB		14.4
Roseglen St NB1		10.2
Roseglen St SB		9.7
Rosemead Blvd NB		36.7
Rosemead Blvd SB		36.4
Rush St EB		24.1
Rush St WB		19.2
San Gabriel Blvd NB		0
San Gabriel Blvd SB		0
Santa Anita Ave NB		60.6
Santa Anita Ave SB		60.5
Telstar Ave EB		24.5
Telstar Ave WB		23.9
Temple City Blvd NB		36.8
Temple City Blvd SB		35.1
Tyler Ave NB		42.4
Tyler Ave SB		44.7
Valley Blvd EB		62.2
Valley Blvd WB		60.7
Valley Mall NB		41.7
Valley Mall SB		39.3
Walnut Grove NB		26.6
Walnut Grove SB		26.3
Whitmore St		22.9
NE corner of Tyler and Valley	GF	64.9

Aerojet Ave NB	11.2
Aerojet Ave SB	11.1
Baldwin Ave NB	37
Baldwin Ave SB	35.5
Chico Ave SB	17.3
Durfee Ave NB	16.3
Durfee Ave NB (South)	0
Durfee Ave SB (South)	18.8
Flair Dr EB	27
Flair Dr WB	27
Fletcher Ave NB	11.1
Fletcher Ave SB	10.6
Garvey Ave EB	38.8
Garvey Ave WB	39.1
Gilman Rd NB	13.5
Gilman Rd SB	18.4
Glendon Way EB	18.9
Glendon Way WB	17.2
I-10 EB	51.5
I-10 EB Ramp	14.7
I-10 EB Ramp 2	17.3
I-10 WB	51.1
I-10 WB Ramp	11.1
Las Tunas Dr EB	0
Las Tunas Dr WB	0
Loftus Dr EB	24.5
Loftus Dr WB	27.4
Lower Azusa Rd EB	37.4
Lower Azusa Rd WB	37.2
Merced Ave NB	5.8
Merced Ave NB	24.3
Merced Ave SB	25.5
Olive St EB	17.4
Olive St WB	17
Olney St WB	5.2
Peck Rd NB	42.8
Peck Rd SB	42.8
Ramona Blvd EB	46.1
Ramona Blvd WB	46.8
Rio Hondo Ave NB	14.2
Rio Hondo Ave SB	10.6
Roseglen St NB	15.6
Roseglen St NB1	11.7

Roseglen St SB			11
Rosemead Blvd NB			35
Rosemead Blvd SB			34.7
Rush St EB			23.5
Rush St WB			18.6
San Gabriel Blvd NB			0
San Gabriel Blvd SB			0
Santa Anita Ave NB			45.5
Santa Anita Ave SB			45.6
Telstar Ave EB			23.7
Telstar Ave WB			23.1
Temple City Blvd NB			34.1
Temple City Blvd SB			32.6
Tyler Ave NB			54.3
Tyler Ave SB			56.8
Valley Blvd EB			60.5
Valley Blvd WB			58.3
Valley Mall NB			41.6
Valley Mall SB			39.3
Walnut Grove NB			0
Walnut Grove SB			0
Whitmore St			21.4
NE corner of Walnut Grove and Garvey	GF	64.1	
Aerojet Ave NB			25.2
Aerojet Ave SB			25.1
Baldwin Ave NB			29.1
Baldwin Ave SB			27.4
Chico Ave SB			21.4
Durfee Ave NB			0
Durfee Ave NB (South)			0
Durfee Ave SB (South)			0
Flair Dr EB			25.8
Flair Dr WB			25.7
Fletcher Ave NB			8.8
Fletcher Ave SB			8.4
Garvey Ave EB			58.2
Garvey Ave WB			58.6
Gilman Rd NB			0
Gilman Rd SB			0
Glendon Way EB			29.5
Glendon Way WB			27.7
I-10 EB			48.6
I-10 EB Ramp			26.7

I-10 EB Ramp 2	28.3
I-10 WB	48
I-10 WB Ramp	-1
Las Tunas Dr EB	0
Las Tunas Dr WB	0
Loftus Dr EB	16.8
Loftus Dr WB	19.2
Lower Azusa Rd EB	28
Lower Azusa Rd WB	28
Merced Ave NB	9.7
Merced Ave NB	21.3
Merced Ave SB	22.6
Olive St EB	0
Olive St WB	0
Olney St WB	-3.6
Peck Rd NB	0
Peck Rd SB	0
Ramona Blvd EB	14.3
Ramona Blvd WB	15
Rio Hondo Ave NB	25.3
Rio Hondo Ave SB	21.5
Roseglen St NB	0
Roseglen St NB1	0
Roseglen St SB	0
Rosemead Blvd NB	44.7
Rosemead Blvd SB	44.7
Rush St EB	29.4
Rush St WB	24.4
San Gabriel Blvd NB	37.7
San Gabriel Blvd SB	38.2
Santa Anita Ave NB	27.9
Santa Anita Ave SB	28.3
Telstar Ave EB	37.9
Telstar Ave WB	32.3
Temple City Blvd NB	31.5
Temple City Blvd SB	30
Tyler Ave NB	0
Tyler Ave SB	0
Valley Blvd EB	36.2
Valley Blvd WB	36.6
Valley Mall NB	7.7
Valley Mall SB	0
Walnut Grove NB	57.7

Walnut Grove SB			55.5
Whitmore St			31
NE corner of Walnut Grove and Valley	GF	64.5	
Aerojet Ave NB			23.1
Aerojet Ave SB			23
Baldwin Ave NB			33.4
Baldwin Ave SB			31.9
Chico Ave SB			17.1
Durfee Ave NB			0
Durfee Ave NB (South)			0
Durfee Ave SB (South)			0
Flair Dr EB			28.5
Flair Dr WB			28.2
Fletcher Ave NB			9.8
Fletcher Ave SB			9.2
Garvey Ave EB			35.5
Garvey Ave WB			34.5
Gilman Rd NB			0
Gilman Rd SB			0
Glendon Way EB			32.1
Glendon Way WB			30.5
I-10 EB			48.5
I-10 EB Ramp			25.1
I-10 EB Ramp 2			26.8
I-10 WB			48.2
I-10 WB Ramp			11.6
Las Tunas Dr EB			29.9
Las Tunas Dr WB			29.6
Loftus Dr EB			21.9
Loftus Dr WB			24.4
Lower Azusa Rd EB			35.5
Lower Azusa Rd WB			35.1
Merced Ave NB			5.4
Merced Ave NB			15.5
Merced Ave SB			16.8
Olive St EB			16.4
Olive St WB			16
Olney St WB			5.8
Peck Rd NB			0
Peck Rd SB			0
Ramona Blvd EB			14.1
Ramona Blvd WB			14.9
Rio Hondo Ave NB			23.9

Rio Hondo Ave SB			20.1
Roseglen St NB			0
Roseglen St NB1			0
Roseglen St SB			0
Rosemead Blvd NB			46.3
Rosemead Blvd SB			46.2
Rush St EB			23.6
Rush St WB			18.6
San Gabriel Blvd NB			40.2
San Gabriel Blvd SB			40.6
Santa Anita Ave NB			27.9
Santa Anita Ave SB			28.4
Telstar Ave EB			33.8
Telstar Ave WB			28.9
Temple City Blvd NB			34.9
Temple City Blvd SB			33.3
Tyler Ave NB			0
Tyler Ave SB			0
Valley Blvd EB			58.1
Valley Blvd WB			58.9
Valley Mall NB			8.2
Valley Mall SB			8.6
Walnut Grove NB			58.1
Walnut Grove SB			56.5
Whitmore St			25.4
NE of San Gabriel at I-10	GF	68.6	
Aerojet Ave NB			21.5
Aerojet Ave SB			21.4
Baldwin Ave NB			28.8
Baldwin Ave SB			27.5
Chico Ave SB			16.7
Durfee Ave NB			0
Durfee Ave NB (South)			0
Durfee Ave SB (South)			0
Flair Dr EB			26.6
Flair Dr WB			26.2
Fletcher Ave NB			4.3
Fletcher Ave SB			3.7
Garvey Ave EB			38
Garvey Ave WB			36.6
Gilman Rd NB			0
Gilman Rd SB			0
Glendon Way EB			28.7

Glendon Way WB	27
I-10 EB	63.3
I-10 EB Ramp	24
I-10 EB Ramp 2	25.7
I-10 WB	65.3
I-10 WB Ramp	9.2
Las Tunas Dr EB	25.5
Las Tunas Dr WB	25.3
Loftus Dr EB	19.3
Loftus Dr WB	21.8
Lower Azusa Rd EB	29.1
Lower Azusa Rd WB	29.2
Merced Ave NB	5.1
Merced Ave NB	18
Merced Ave SB	19.3
Olive St EB	0
Olive St WB	0
Olney St WB	3.3
Peck Rd NB	0
Peck Rd SB	0
Ramona Blvd EB	0
Ramona Blvd WB	0
Rio Hondo Ave NB	24.2
Rio Hondo Ave SB	18.3
Roseglen St NB	0
Roseglen St NB1	0
Roseglen St SB	0
Rosemead Blvd NB	41.8
Rosemead Blvd SB	41.5
Rush St EB	24.2
Rush St WB	19.2
San Gabriel Blvd NB	59.6
San Gabriel Blvd SB	58.3
Santa Anita Ave NB	0
Santa Anita Ave SB	0
Telstar Ave EB	32.9
Telstar Ave WB	27.7
Temple City Blvd NB	31.3
Temple City Blvd SB	29.8
Tyler Ave NB	0
Tyler Ave SB	0
Valley Blvd EB	42.4
Valley Blvd WB	42.5

Valley Mall NB			0
Valley Mall SB			0
Walnut Grove NB			42.9
Walnut Grove SB			42.8
Whitmore St			24.9
NW Corner of Aerojet and Telstar	GF	69.8	
Aerojet Ave NB			55
Aerojet Ave SB			55.9
Baldwin Ave NB			34.6
Baldwin Ave SB			32.8
Chico Ave SB			26
Durfee Ave NB			0
Durfee Ave NB (South)			0
Durfee Ave SB (South)			0
Flair Dr EB			40.8
Flair Dr WB			40
Fletcher Ave NB			15.8
Fletcher Ave SB			15.6
Garvey Ave EB			44.4
Garvey Ave WB			43.9
Gilman Rd NB			0
Gilman Rd SB			0
Glendon Way EB			35.9
Glendon Way WB			34.1
I-10 EB			56.9
I-10 EB Ramp			35.8
I-10 EB Ramp 2			40.5
I-10 WB			55.6
I-10 WB Ramp			6
Las Tunas Dr EB			22.9
Las Tunas Dr WB			22.1
Loftus Dr EB			22.8
Loftus Dr WB			25.2
Lower Azusa Rd EB			32.7
Lower Azusa Rd WB			32.8
Merced Ave NB			14.3
Merced Ave NB			25.7
Merced Ave SB			27
Olive St EB			15.3
Olive St WB			14.9
Olney St WB			5.2
Peck Rd NB			26.9
Peck Rd SB			26.8

Ramona Blvd EB			16.9
Ramona Blvd WB			13.7
Rio Hondo Ave NB			39.4
Rio Hondo Ave SB			35.1
Roseglen St NB			0
Roseglen St NB1			0
Roseglen St SB			0
Rosemead Blvd NB			59.4
Rosemead Blvd SB			59
Rush St EB			29.9
Rush St WB			25
San Gabriel Blvd NB			33.3
San Gabriel Blvd SB			33.9
Santa Anita Ave NB			30.4
Santa Anita Ave SB			31.1
Telstar Ave EB			65
Telstar Ave WB			64.6
Temple City Blvd NB			36.8
Temple City Blvd SB			35.6
Tyler Ave NB			26.5
Tyler Ave SB			25
Valley Blvd EB			39.2
Valley Blvd WB			39.7
Valley Mall NB			-0.1
Valley Mall SB			-2.3
Walnut Grove NB			39.2
Walnut Grove SB			38.6
Whitmore St			43.9
NW corner of Baldwin and Olive	GF	59.9	
Aerojet Ave NB			14.9
Aerojet Ave SB			14.8
Baldwin Ave NB			55.8
Baldwin Ave SB			55.8
Chico Ave SB			0
Durfee Ave NB			0
Durfee Ave NB (South)			0
Durfee Ave SB (South)			0
Flair Dr EB			23.7
Flair Dr WB			23.7
Fletcher Ave NB			7.8
Fletcher Ave SB			7.3
Garvey Ave EB			0
Garvey Ave WB			0

Gilman Rd NB	0
Gilman Rd SB	0
Glendon Way EB	19.2
Glendon Way WB	17.6
I-10 EB	39.6
I-10 EB Ramp	14
I-10 EB Ramp 2	16.4
I-10 WB	38.9
I-10 WB Ramp	8.1
Las Tunas Dr EB	33.3
Las Tunas Dr WB	33.1
Loftus Dr EB	20.4
Loftus Dr WB	22.9
Lower Azusa Rd EB	39.9
Lower Azusa Rd WB	40
Merced Ave NB	0
Merced Ave NB	14.9
Merced Ave SB	16.4
Olive St EB	48.3
Olive St WB	48.7
Olney St WB	2.3
Peck Rd NB	30.2
Peck Rd SB	29.6
Ramona Blvd EB	25.4
Ramona Blvd WB	26
Rio Hondo Ave NB	14.1
Rio Hondo Ave SB	10.9
Roseglen St NB	0
Roseglen St NB1	0
Roseglen St SB	0
Rosemead Blvd NB	37.4
Rosemead Blvd SB	37.3
Rush St EB	0
Rush St WB	0
San Gabriel Blvd NB	0
San Gabriel Blvd SB	0
Santa Anita Ave NB	32
Santa Anita Ave SB	32.7
Telstar Ave EB	26
Telstar Ave WB	21.9
Temple City Blvd NB	38.3
Temple City Blvd SB	36.4
Tyler Ave NB	30.5

Tyler Ave SB			32.7
Valley Blvd EB			35.4
Valley Blvd WB			35.6
Valley Mall NB			15.9
Valley Mall SB			13.7
Walnut Grove NB			25.1
Walnut Grove SB			25.2
Whitmore St			0
NW corner of Glendon and Rosemead	GF	69.9	
Aerojet Ave NB			32.8
Aerojet Ave SB			32.8
Baldwin Ave NB			35.5
Baldwin Ave SB			34.1
Chico Ave SB			21.3
Durfee Ave NB			0
Durfee Ave NB (South)			0
Durfee Ave SB (South)			0
Flair Dr EB			36.1
Flair Dr WB			35.6
Fletcher Ave NB			13.8
Fletcher Ave SB			13.2
Garvey Ave EB			39.7
Garvey Ave WB			38.9
Gilman Rd NB			0
Gilman Rd SB			0
Glendon Way EB			57
Glendon Way WB			56.7
I-10 EB			59.7
I-10 EB Ramp			40
I-10 EB Ramp 2			42.2
I-10 WB			59.3
I-10 WB Ramp			16.5
Las Tunas Dr EB			27.7
Las Tunas Dr WB			27.5
Loftus Dr EB			26.1
Loftus Dr WB			28.5
Lower Azusa Rd EB			34.6
Lower Azusa Rd WB			34.6
Merced Ave NB			9.7
Merced Ave NB			19.5
Merced Ave SB			20.8
Olive St EB			16.2
Olive St WB			15.8

Olney St WB			10.7
Peck Rd NB			0
Peck Rd SB			0
Ramona Blvd EB			22.8
Ramona Blvd WB			23.4
Rio Hondo Ave NB			31
Rio Hondo Ave SB			27.3
Roseglen St NB			0
Roseglen St NB1			0
Roseglen St SB			0
Rosemead Blvd NB			65.2
Rosemead Blvd SB			65.5
Rush St EB			26.8
Rush St WB			21.8
San Gabriel Blvd NB			35.9
San Gabriel Blvd SB			36.4
Santa Anita Ave NB			30.6
Santa Anita Ave SB			30.9
Telstar Ave EB			42.7
Telstar Ave WB			36.9
Temple City Blvd NB			37.3
Temple City Blvd SB			36
Tyler Ave NB			25.6
Tyler Ave SB			26.8
Valley Blvd EB			43.8
Valley Blvd WB			44.1
Valley Mall NB			15.2
Valley Mall SB			13.1
Walnut Grove NB			42.4
Walnut Grove SB			41.9
Whitmore St			32.3
NW corner of Merced and Garvey	GF	62.1	
Aerojet Ave NB			23
Aerojet Ave SB			22.8
Baldwin Ave NB			37.7
Baldwin Ave SB			36.6
Chico Ave SB			30.1
Durfee Ave NB			0
Durfee Ave NB (South)			0
Durfee Ave SB (South)			0
Flair Dr EB			33.4
Flair Dr WB			33.6
Fletcher Ave NB			19.8

Fletcher Ave SB	19.3
Garvey Ave EB	56.1
Garvey Ave WB	56.7
Gilman Rd NB	0
Gilman Rd SB	0
Glendon Way EB	22.4
Glendon Way WB	20.4
I-10 EB	50.9
I-10 EB Ramp	20
I-10 EB Ramp 2	22.7
I-10 WB	50.1
I-10 WB Ramp	17.9
Las Tunas Dr EB	0
Las Tunas Dr WB	0
Loftus Dr EB	28.7
Loftus Dr WB	31.2
Lower Azusa Rd EB	32.1
Lower Azusa Rd WB	32
Merced Ave NB	18.8
Merced Ave NB	51.9
Merced Ave SB	53.9
Olive St EB	14.8
Olive St WB	14.4
Olney St WB	11.8
Peck Rd NB	34.2
Peck Rd SB	34.3
Ramona Blvd EB	31.7
Ramona Blvd WB	32.1
Rio Hondo Ave NB	23.5
Rio Hondo Ave SB	19.8
Roseglen St NB	0
Roseglen St NB1	0
Roseglen St SB	0
Rosemead Blvd NB	42.6
Rosemead Blvd SB	42.4
Rush St EB	32.1
Rush St WB	27.2
San Gabriel Blvd NB	26.5
San Gabriel Blvd SB	27.1
Santa Anita Ave NB	40.8
Santa Anita Ave SB	41.4
Telstar Ave EB	36.1
Telstar Ave WB	33.3

Temple City Blvd NB			35.9
Temple City Blvd SB			34.8
Tyler Ave NB			34.6
Tyler Ave SB			34.8
Valley Blvd EB			39.2
Valley Blvd WB			39
Valley Mall NB			21.4
Valley Mall SB			19.2
Walnut Grove NB			30.9
Walnut Grove SB			30.4
Whitmore St			30.5
NW corner of Peck and Lower Azusa	GF	63.4	
Aerojet Ave NB			0
Aerojet Ave SB			0
Baldwin Ave NB			31.3
Baldwin Ave SB			29.7
Chico Ave SB			0
Durfee Ave NB			24
Durfee Ave NB (South)			0
Durfee Ave SB (South)			20.6
Flair Dr EB			0
Flair Dr WB			0
Fletcher Ave NB			0
Fletcher Ave SB			0
Garvey Ave EB			28.7
Garvey Ave WB			29
Gilman Rd NB			16.1
Gilman Rd SB			20.9
Glendon Way EB			0
Glendon Way WB			0
I-10 EB			39.9
I-10 EB Ramp			0
I-10 EB Ramp 2			0
I-10 WB			39.9
I-10 WB Ramp			0
Las Tunas Dr EB			0
Las Tunas Dr WB			0
Loftus Dr EB			12.6
Loftus Dr WB			14.8
Lower Azusa Rd EB			56.7
Lower Azusa Rd WB			57.3
Merced Ave NB			0
Merced Ave NB			0

Merced Ave SB			0
Olive St EB			16.6
Olive St WB			16.2
Olney St WB			0
Peck Rd NB			57.1
Peck Rd SB			57.7
Ramona Blvd EB			35.2
Ramona Blvd WB			35.4
Rio Hondo Ave NB			0
Rio Hondo Ave SB			0
Roseglen St NB			27.1
Roseglen St NB1			19.4
Roseglen St SB			22.5
Rosemead Blvd NB			0
Rosemead Blvd SB			0
Rush St EB			0
Rush St WB			0
San Gabriel Blvd NB			0
San Gabriel Blvd SB			0
Santa Anita Ave NB			33.7
Santa Anita Ave SB			34.2
Telstar Ave EB			0
Telstar Ave WB			0
Temple City Blvd NB			26.4
Temple City Blvd SB			24.3
Tyler Ave NB			36.9
Tyler Ave SB			38.8
Valley Blvd EB			34.1
Valley Blvd WB			33.3
Valley Mall NB			17.2
Valley Mall SB			15
Walnut Grove NB			0
Walnut Grove SB			0
Whitmore St			0
NW corner of Rio Hondo and Telstar	GF	67.8	
Aerojet Ave NB			38.3
Aerojet Ave SB			37.9
Baldwin Ave NB			17.6
Baldwin Ave SB			16.8
Chico Ave SB			28.2
Durfee Ave NB			0
Durfee Ave NB (South)			0
Durfee Ave SB (South)			0

Flair Dr EB	42.5
Flair Dr WB	41.7
Fletcher Ave NB	24.3
Fletcher Ave SB	24
Garvey Ave EB	44.7
Garvey Ave WB	44.5
Gilman Rd NB	0
Gilman Rd SB	0
Glendon Way EB	32.1
Glendon Way WB	30.4
I-10 EB	56
I-10 EB Ramp	29.3
I-10 EB Ramp 2	32.9
I-10 WB	54.6
I-10 WB Ramp	-2.2
Las Tunas Dr EB	19.8
Las Tunas Dr WB	0
Loftus Dr EB	6.6
Loftus Dr WB	9
Lower Azusa Rd EB	30.5
Lower Azusa Rd WB	30.4
Merced Ave NB	16.6
Merced Ave NB	29.7
Merced Ave SB	31.1
Olive St EB	8.8
Olive St WB	8.4
Olney St WB	-9
Peck Rd NB	28.8
Peck Rd SB	29.2
Ramona Blvd EB	26.4
Ramona Blvd WB	27.1
Rio Hondo Ave NB	59.1
Rio Hondo Ave SB	56.7
Roseglen St NB	0
Roseglen St NB1	0
Roseglen St SB	0
Rosemead Blvd NB	51.5
Rosemead Blvd SB	51.3
Rush St EB	30.4
Rush St WB	25.4
San Gabriel Blvd NB	31.6
San Gabriel Blvd SB	32.2
Santa Anita Ave NB	33

Santa Anita Ave SB			33.5
Telstar Ave EB			62.1
Telstar Ave WB			63.1
Temple City Blvd NB			27.7
Temple City Blvd SB			26.5
Tyler Ave NB			28.6
Tyler Ave SB			27.7
Valley Blvd EB			38.6
Valley Blvd WB			39.1
Valley Mall NB			16.1
Valley Mall SB			14
Walnut Grove NB			36.8
Walnut Grove SB			36.3
Whitmore St			43.6
NW corner of San Gabriel and Valley	GF	66.4	
Aerojet Ave NB			19.4
Aerojet Ave SB			19.3
Baldwin Ave NB			29.2
Baldwin Ave SB			27.6
Chico Ave SB			15
Durfee Ave NB			0
Durfee Ave NB (South)			0
Durfee Ave SB (South)			0
Flair Dr EB			24.9
Flair Dr WB			24.6
Fletcher Ave NB			5.2
Fletcher Ave SB			4.6
Garvey Ave EB			34.2
Garvey Ave WB			32.9
Gilman Rd NB			0
Gilman Rd SB			0
Glendon Way EB			26.6
Glendon Way WB			25
I-10 EB			47.2
I-10 EB Ramp			21
I-10 EB Ramp 2			22.8
I-10 WB			47.1
I-10 WB Ramp			8.2
Las Tunas Dr EB			28.4
Las Tunas Dr WB			28.2
Loftus Dr EB			18.6
Loftus Dr WB			21.1
Lower Azusa Rd EB			30.1

Lower Azusa Rd WB			30.1
Merced Ave NB			3.3
Merced Ave NB			1.1
Merced Ave SB			2.7
Olive St EB			9.2
Olive St WB			8.9
Olney St WB			2.3
Peck Rd NB			0
Peck Rd SB			0
Ramona Blvd EB			0
Ramona Blvd WB			0
Rio Hondo Ave NB			20.4
Rio Hondo Ave SB			16.6
Roseglen St NB			0
Roseglen St NB1			0
Roseglen St SB			0
Rosemead Blvd NB			40.8
Rosemead Blvd SB			40.7
Rush St EB			19.7
Rush St WB			14.7
San Gabriel Blvd NB			56.5
San Gabriel Blvd SB			58.7
Santa Anita Ave NB			0
Santa Anita Ave SB			0
Telstar Ave EB			30.5
Telstar Ave WB			25.6
Temple City Blvd NB			31.3
Temple City Blvd SB			29.7
Tyler Ave NB			0
Tyler Ave SB			0
Valley Blvd EB			60.3
Valley Blvd WB			62.9
Valley Mall NB			0
Valley Mall SB			0
Walnut Grove NB			40.4
Walnut Grove SB			40.6
Whitmore St			22.7
NW corner of Tyler and Garvey	GF	65.3	
Aerojet Ave NB			15
Aerojet Ave SB			14.9
Baldwin Ave NB			34.3
Baldwin Ave SB			32.8
Chico Ave SB			20

Durfee Ave NB	11.1
Durfee Ave NB (South)	0
Durfee Ave SB (South)	17.2
Flair Dr EB	26.1
Flair Dr WB	26.5
Fletcher Ave NB	11.7
Fletcher Ave SB	11.2
Garvey Ave EB	57.7
Garvey Ave WB	59.1
Gilman Rd NB	12.2
Gilman Rd SB	17.1
Glendon Way EB	12.6
Glendon Way WB	11.1
I-10 EB	54.4
I-10 EB Ramp	13.8
I-10 EB Ramp 2	15.3
I-10 WB	53.6
I-10 WB Ramp	11.1
Las Tunas Dr EB	0
Las Tunas Dr WB	0
Loftus Dr EB	23.3
Loftus Dr WB	26
Lower Azusa Rd EB	33
Lower Azusa Rd WB	32.8
Merced Ave NB	8.5
Merced Ave NB	28.1
Merced Ave SB	29.3
Olive St EB	0
Olive St WB	0
Olney St WB	5.1
Peck Rd NB	44.3
Peck Rd SB	44.9
Ramona Blvd EB	37.5
Ramona Blvd WB	37.8
Rio Hondo Ave NB	16.4
Rio Hondo Ave SB	12.8
Roseglen St NB	0
Roseglen St NB1	6.5
Roseglen St SB	0
Rosemead Blvd NB	35.8
Rosemead Blvd SB	35.7
Rush St EB	26.8
Rush St WB	21.8

San Gabriel Blvd NB			0
San Gabriel Blvd SB			0
Santa Anita Ave NB			44.5
Santa Anita Ave SB			44.8
Telstar Ave EB			29.2
Telstar Ave WB			25.8
Temple City Blvd NB			32.1
Temple City Blvd SB			30.7
Tyler Ave NB			58.6
Tyler Ave SB			57.3
Valley Blvd EB			42.5
Valley Blvd WB			41.6
Valley Mall NB			25.4
Valley Mall SB			23.4
Walnut Grove NB			0
Walnut Grove SB			0
Whitmore St			22.8
NW corner of Tyler and Ramona	GF	64.0	
Aerojet Ave NB			10.5
Aerojet Ave SB			10.3
Baldwin Ave NB			37.4
Baldwin Ave SB			35.9
Chico Ave SB			18.7
Durfee Ave NB			15.2
Durfee Ave NB (South)			0
Durfee Ave SB (South)			17.9
Flair Dr EB			28.3
Flair Dr WB			28.4
Fletcher Ave NB			12.4
Fletcher Ave SB			11.9
Garvey Ave EB			40.5
Garvey Ave WB			40.8
Gilman Rd NB			12.7
Gilman Rd SB			17.6
Glendon Way EB			19.6
Glendon Way WB			17.9
I-10 EB			55.4
I-10 EB Ramp			13.1
I-10 EB Ramp 2			15.8
I-10 WB			54.9
I-10 WB Ramp			12.3
Las Tunas Dr EB			0
Las Tunas Dr WB			0

Loftus Dr EB			25.4
Loftus Dr WB			28.1
Lower Azusa Rd EB			36.4
Lower Azusa Rd WB			36.2
Merced Ave NB			7.1
Merced Ave NB			26.2
Merced Ave SB			27.4
Olive St EB			16.9
Olive St WB			16.5
Olney St WB			6.4
Peck Rd NB			42
Peck Rd SB			42.2
Ramona Blvd EB			54.7
Ramona Blvd WB			56.2
Rio Hondo Ave NB			16.2
Rio Hondo Ave SB			12.5
Roseglen St NB			14.5
Roseglen St NB1			10.6
Roseglen St SB			9.9
Rosemead Blvd NB			36.1
Rosemead Blvd SB			35.9
Rush St EB			24.7
Rush St WB			19.7
San Gabriel Blvd NB			0
San Gabriel Blvd SB			0
Santa Anita Ave NB			46.9
Santa Anita Ave SB			47
Telstar Ave EB			29.2
Telstar Ave WB			26.2
Temple City Blvd NB			34.5
Temple City Blvd SB			33
Tyler Ave NB			55.1
Tyler Ave SB			55.5
Valley Blvd EB			52.4
Valley Blvd WB			50
Valley Mall NB			41.7
Valley Mall SB			39.9
Walnut Grove NB			0
Walnut Grove SB			0
Whitmore St			22.5
NW corner of Valley and Garvey	GF	65.5	
Aerojet Ave NB			0
Aerojet Ave SB			0

Baldwin Ave NB	30.2
Baldwin Ave SB	28.6
Chico Ave SB	15.1
Durfee Ave NB	16.9
Durfee Ave NB (South)	0
Durfee Ave SB (South)	22.4
Flair Dr EB	21.3
Flair Dr WB	21.8
Fletcher Ave NB	7.1
Fletcher Ave SB	6.6
Garvey Ave EB	59
Garvey Ave WB	60.9
Gilman Rd NB	17
Gilman Rd SB	21.8
Glendon Way EB	0
Glendon Way WB	0
I-10 EB	54.8
I-10 EB Ramp	0
I-10 EB Ramp 2	0
I-10 WB	54.5
I-10 WB Ramp	6.5
Las Tunas Dr EB	0
Las Tunas Dr WB	0
Loftus Dr EB	18.7
Loftus Dr WB	21.3
Lower Azusa Rd EB	32.6
Lower Azusa Rd WB	32.3
Merced Ave NB	3.6
Merced Ave NB	21.5
Merced Ave SB	22.6
Olive St EB	0
Olive St WB	0
Olney St WB	0.8
Peck Rd NB	43.2
Peck Rd SB	43.3
Ramona Blvd EB	38.4
Ramona Blvd WB	38.6
Rio Hondo Ave NB	12.1
Rio Hondo Ave SB	8.2
Roseglen St NB	15.2
Roseglen St NB1	12.2
Roseglen St SB	10.5
Rosemead Blvd NB	25.6

Rosemead Blvd SB			25.2
Rush St EB			21.5
Rush St WB			16.4
San Gabriel Blvd NB			0
San Gabriel Blvd SB			0
Santa Anita Ave NB			35.8
Santa Anita Ave SB			36.1
Telstar Ave EB			17.7
Telstar Ave WB			17.2
Temple City Blvd NB			25.8
Temple City Blvd SB			24.7
Tyler Ave NB			36.2
Tyler Ave SB			36.4
Valley Blvd EB			57.1
Valley Blvd WB			55.4
Valley Mall NB			21.5
Valley Mall SB			19.3
Walnut Grove NB			0
Walnut Grove SB			0
Whitmore St			0
NW of Santa Anita at I-10	GF	71.4	
Aerojet Ave NB			15.1
Aerojet Ave SB			14.9
Baldwin Ave NB			39.4
Baldwin Ave SB			38
Chico Ave SB			21.7
Durfee Ave NB			4
Durfee Ave NB (South)			0
Durfee Ave SB (South)			15.8
Flair Dr EB			31.2
Flair Dr WB			31.6
Fletcher Ave NB			15.6
Fletcher Ave SB			15.1
Garvey Ave EB			43.1
Garvey Ave WB			43.4
Gilman Rd NB			10.9
Gilman Rd SB			15.7
Glendon Way EB			21.6
Glendon Way WB			19.9
I-10 EB			67.2
I-10 EB Ramp			11.7
I-10 EB Ramp 2			14.1
I-10 WB			67.6

I-10 WB Ramp	15.8
Las Tunas Dr EB	0
Las Tunas Dr WB	0
Loftus Dr EB	28.6
Loftus Dr WB	31.4
Lower Azusa Rd EB	35.1
Lower Azusa Rd WB	35
Merced Ave NB	10.2
Merced Ave NB	31.3
Merced Ave SB	32.4
Olive St EB	16.6
Olive St WB	16.2
Olney St WB	10
Peck Rd NB	38.7
Peck Rd SB	38.9
Ramona Blvd EB	43
Ramona Blvd WB	43.5
Rio Hondo Ave NB	19.2
Rio Hondo Ave SB	15.5
Roseglen St NB	0
Roseglen St NB1	-0.9
Roseglen St SB	0
Rosemead Blvd NB	38.2
Rosemead Blvd SB	38
Rush St EB	27
Rush St WB	22
San Gabriel Blvd NB	0
San Gabriel Blvd SB	0
Santa Anita Ave NB	59.9
Santa Anita Ave SB	61.5
Telstar Ave EB	31.8
Telstar Ave WB	29
Temple City Blvd NB	36.1
Temple City Blvd SB	34.8
Tyler Ave NB	41.5
Tyler Ave SB	41
Valley Blvd EB	45.1
Valley Blvd WB	44.4
Valley Mall NB	30.2
Valley Mall SB	28.3
Walnut Grove NB	28.6
Walnut Grove SB	28.3
Whitmore St	25.1

SE corner of Aerojet and Flair	GF	70.8
Aerojet Ave NB		52.3
Aerojet Ave SB		51.5
Baldwin Ave NB		37.4
Baldwin Ave SB		36.1
Chico Ave SB		24.9
Durfee Ave NB		0
Durfee Ave NB (South)		0
Durfee Ave SB (South)		0
Flair Dr EB		56
Flair Dr WB		54.6
Fletcher Ave NB		14.1
Fletcher Ave SB		13.5
Garvey Ave EB		42
Garvey Ave WB		41.5
Gilman Rd NB		0
Gilman Rd SB		0
Glendon Way EB		37.7
Glendon Way WB		36
I-10 EB		67.9
I-10 EB Ramp		34.9
I-10 EB Ramp 2		39.9
I-10 WB		66
I-10 WB Ramp		22.4
Las Tunas Dr EB		26.5
Las Tunas Dr WB		26.3
Loftus Dr EB		29.7
Loftus Dr WB		32
Lower Azusa Rd EB		34
Lower Azusa Rd WB		34.1
Merced Ave NB		13.3
Merced Ave NB		23.1
Merced Ave SB		24.5
Olive St EB		16.1
Olive St WB		15.7
Olney St WB		16.4
Peck Rd NB		17.5
Peck Rd SB		18.2
Ramona Blvd EB		13.9
Ramona Blvd WB		14.3
Rio Hondo Ave NB		43.4
Rio Hondo Ave SB		39.1
Roseglen St NB		0

Roseglen St NB1			0
Roseglen St SB			0
Rosemead Blvd NB			53.1
Rosemead Blvd SB			52.6
Rush St EB			28.9
Rush St WB			23.9
San Gabriel Blvd NB			33.2
San Gabriel Blvd SB			33.8
Santa Anita Ave NB			30.8
Santa Anita Ave SB			31
Telstar Ave EB			50.7
Telstar Ave WB			46.9
Temple City Blvd NB			39.2
Temple City Blvd SB			38.5
Tyler Ave NB			24.6
Tyler Ave SB			27.8
Valley Blvd EB			41.1
Valley Blvd WB			41.6
Valley Mall NB			16
Valley Mall SB			13.7
Walnut Grove NB			38.6
Walnut Grove SB			38.1
Whitmore St			38.8
SE corner of Baldwin and Valley	GF	66.0	
Aerojet Ave NB			22.5
Aerojet Ave SB			22.4
Baldwin Ave NB			62.2
Baldwin Ave SB			58.3
Chico Ave SB			21.1
Durfee Ave NB			0
Durfee Ave NB (South)			0
Durfee Ave SB (South)			0
Flair Dr EB			36.8
Flair Dr WB			37.1
Fletcher Ave NB			19.8
Fletcher Ave SB			19.3
Garvey Ave EB			37.9
Garvey Ave WB			37.9
Gilman Rd NB			0
Gilman Rd SB			0
Glendon Way EB			25.1
Glendon Way WB			23.5
I-10 EB			52.8

I-10 EB Ramp	20.5
I-10 EB Ramp 2	23.1
I-10 WB	52.2
I-10 WB Ramp	21.8
Las Tunas Dr EB	27.1
Las Tunas Dr WB	26.9
Loftus Dr EB	40.3
Loftus Dr WB	43.6
Lower Azusa Rd EB	38.5
Lower Azusa Rd WB	38.6
Merced Ave NB	9.5
Merced Ave NB	27.2
Merced Ave SB	28.4
Olive St EB	19.9
Olive St WB	19.5
Olney St WB	16.1
Peck Rd NB	34.2
Peck Rd SB	34
Ramona Blvd EB	32.3
Ramona Blvd WB	32.8
Rio Hondo Ave NB	20
Rio Hondo Ave SB	16.6
Roseglen St NB	0
Roseglen St NB1	0
Roseglen St SB	0
Rosemead Blvd NB	40.6
Rosemead Blvd SB	40.3
Rush St EB	25.7
Rush St WB	20.7
San Gabriel Blvd NB	28
San Gabriel Blvd SB	28.6
Santa Anita Ave NB	40.1
Santa Anita Ave SB	40.5
Telstar Ave EB	33.9
Telstar Ave WB	30.4
Temple City Blvd NB	45.5
Temple City Blvd SB	44
Tyler Ave NB	34.4
Tyler Ave SB	35.9
Valley Blvd EB	57.8
Valley Blvd WB	57.1
Valley Mall NB	24.4
Valley Mall SB	22.1

Walnut Grove NB			31.4
Walnut Grove SB			31.1
Whitmore St			22.5
SE corner of Chico and Garvey	GF	64.1	
Aerojet Ave NB			26.1
Aerojet Ave SB			25.9
Baldwin Ave NB			36.2
Baldwin Ave SB			35
Chico Ave SB			49.7
Durfee Ave NB			0
Durfee Ave NB (South)			0
Durfee Ave SB (South)			0
Flair Dr EB			33.5
Flair Dr WB			33.4
Fletcher Ave NB			21.1
Fletcher Ave SB			20.7
Garvey Ave EB			60.8
Garvey Ave WB			59.6
Gilman Rd NB			0
Gilman Rd SB			0
Glendon Way EB			25.9
Glendon Way WB			24.2
I-10 EB			48.7
I-10 EB Ramp			22.6
I-10 EB Ramp 2			25.4
I-10 WB			47.9
I-10 WB Ramp			18
Las Tunas Dr EB			0
Las Tunas Dr WB			0
Loftus Dr EB			27.4
Loftus Dr WB			29.8
Lower Azusa Rd EB			30.1
Lower Azusa Rd WB			30
Merced Ave NB			40.5
Merced Ave NB			34
Merced Ave SB			35.4
Olive St EB			0
Olive St WB			0
Olney St WB			11.9
Peck Rd NB			30.9
Peck Rd SB			31.1
Ramona Blvd EB			28
Ramona Blvd WB			28.5

Rio Hondo Ave NB			28.1
Rio Hondo Ave SB			24.5
Roseglen St NB			0
Roseglen St NB1			0
Roseglen St SB			0
Rosemead Blvd NB			48.7
Rosemead Blvd SB			48.4
Rush St EB			35.1
Rush St WB			30.3
San Gabriel Blvd NB			29.1
San Gabriel Blvd SB			29.7
Santa Anita Ave NB			36.3
Santa Anita Ave SB			36.8
Telstar Ave EB			39.1
Telstar Ave WB			36.1
Temple City Blvd NB			35.5
Temple City Blvd SB			34.5
Tyler Ave NB			31.2
Tyler Ave SB			31.5
Valley Blvd EB			37.8
Valley Blvd WB			37.6
Valley Mall NB			18.4
Valley Mall SB			16.2
Walnut Grove NB			33.9
Walnut Grove SB			33.5
Whitmore St			36.1
SE corner of Rosemead and Garvey	GF	66.7	
Aerojet Ave NB			28.5
Aerojet Ave SB			28.3
Baldwin Ave NB			35
Baldwin Ave SB			33.7
Chico Ave SB			37.9
Durfee Ave NB			0
Durfee Ave NB (South)			0
Durfee Ave SB (South)			0
Flair Dr EB			33.3
Flair Dr WB			33.1
Fletcher Ave NB			20.4
Fletcher Ave SB			20
Garvey Ave EB			61.3
Garvey Ave WB			60.6
Gilman Rd NB			0
Gilman Rd SB			0

Glendon Way EB	27.5
Glendon Way WB	25.8
I-10 EB	48.6
I-10 EB Ramp	24.8
I-10 EB Ramp 2	27.7
I-10 WB	47.7
I-10 WB Ramp	17.4
Las Tunas Dr EB	0
Las Tunas Dr WB	0
Loftus Dr EB	26.4
Loftus Dr WB	28.7
Lower Azusa Rd EB	29.5
Lower Azusa Rd WB	29.5
Merced Ave NB	26.2
Merced Ave NB	29.6
Merced Ave SB	30.9
Olive St EB	0
Olive St WB	0
Olney St WB	11.3
Peck Rd NB	28.8
Peck Rd SB	29
Ramona Blvd EB	25.8
Ramona Blvd WB	26.4
Rio Hondo Ave NB	32.1
Rio Hondo Ave SB	28.3
Roseglen St NB	0
Roseglen St NB1	0
Roseglen St SB	0
Rosemead Blvd NB	60.2
Rosemead Blvd SB	59.4
Rush St EB	35.3
Rush St WB	30.4
San Gabriel Blvd NB	30.4
San Gabriel Blvd SB	31
Santa Anita Ave NB	34.4
Santa Anita Ave SB	34.8
Telstar Ave EB	41.6
Telstar Ave WB	37.9
Temple City Blvd NB	34.6
Temple City Blvd SB	33.6
Tyler Ave NB	29.5
Tyler Ave SB	29.7
Valley Blvd EB	37.2

Valley Blvd WB			37.2
Valley Mall NB			16.9
Valley Mall SB			14.8
Walnut Grove NB			35.9
Walnut Grove SB			35.4
Whitmore St			42
SE corner of Temple City at Loftus	GF	68.2	
Aerojet Ave NB			26.7
Aerojet Ave SB			26.5
Baldwin Ave NB			47.3
Baldwin Ave SB			46.7
Chico Ave SB			24
Durfee Ave NB			0
Durfee Ave NB (South)			0
Durfee Ave SB (South)			0
Flair Dr EB			46.4
Flair Dr WB			46.8
Fletcher Ave NB			29.8
Fletcher Ave SB			29.3
Garvey Ave EB			39.4
Garvey Ave WB			39.4
Gilman Rd NB			0
Gilman Rd SB			0
Glendon Way EB			28.3
Glendon Way WB			26.9
I-10 EB			62.6
I-10 EB Ramp			24.2
I-10 EB Ramp 2			27.1
I-10 WB			61.3
I-10 WB Ramp			38.3
Las Tunas Dr EB			26.7
Las Tunas Dr WB			26.5
Loftus Dr EB			56.1
Loftus Dr WB			56.9
Lower Azusa Rd EB			36.4
Lower Azusa Rd WB			36.5
Merced Ave NB			12.5
Merced Ave NB			28.8
Merced Ave SB			30.1
Olive St EB			18.2
Olive St WB			17.8
Olney St WB			32.7
Peck Rd NB			32.4

Peck Rd SB			32.6
Ramona Blvd EB			30
Ramona Blvd WB			30.6
Rio Hondo Ave NB			26.8
Rio Hondo Ave SB			23.4
Roseglen St NB			0
Roseglen St NB1			0
Roseglen St SB			0
Rosemead Blvd NB			43
Rosemead Blvd SB			42.6
Rush St EB			27.5
Rush St WB			22.6
San Gabriel Blvd NB			29.6
San Gabriel Blvd SB			30.2
Santa Anita Ave NB			37.7
Santa Anita Ave SB			39.3
Telstar Ave EB			38.8
Telstar Ave WB			37.9
Temple City Blvd NB			60.7
Temple City Blvd SB			60
Tyler Ave NB			32.5
Tyler Ave SB			33.7
Valley Blvd EB			44.7
Valley Blvd WB			44.9
Valley Mall NB			21.1
Valley Mall SB			19
Walnut Grove NB			33.2
Walnut Grove SB			32.9
Whitmore St			21.3
SE corner of Temple City at Valley	GF	65.3	
Aerojet Ave NB			23.3
Aerojet Ave SB			23.1
Baldwin Ave NB			47.9
Baldwin Ave SB			45.9
Chico Ave SB			19.7
Durfee Ave NB			0
Durfee Ave NB (South)			0
Durfee Ave SB (South)			0
Flair Dr EB			34.3
Flair Dr WB			34.4
Fletcher Ave NB			18.3
Fletcher Ave SB			17.8
Garvey Ave EB			36.3

Garvey Ave WB	36.2
Gilman Rd NB	0
Gilman Rd SB	0
Glendon Way EB	26.5
Glendon Way WB	24.9
I-10 EB	49.4
I-10 EB Ramp	21.3
I-10 EB Ramp 2	24
I-10 WB	48.6
I-10 WB Ramp	19.9
Las Tunas Dr EB	28.9
Las Tunas Dr WB	28.7
Loftus Dr EB	33.6
Loftus Dr WB	36.1
Lower Azusa Rd EB	41
Lower Azusa Rd WB	41.3
Merced Ave NB	8.1
Merced Ave NB	24.3
Merced Ave SB	25.6
Olive St EB	21.5
Olive St WB	21
Olney St WB	14.4
Peck Rd NB	32.2
Peck Rd SB	32.1
Ramona Blvd EB	29.5
Ramona Blvd WB	30
Rio Hondo Ave NB	22.3
Rio Hondo Ave SB	19
Roseglen St NB	0
Roseglen St NB1	0
Roseglen St SB	0
Rosemead Blvd NB	42
Rosemead Blvd SB	41.7
Rush St EB	24.7
Rush St WB	19.7
San Gabriel Blvd NB	29.2
San Gabriel Blvd SB	29.7
Santa Anita Ave NB	36.8
Santa Anita Ave SB	37.2
Telstar Ave EB	34.1
Telstar Ave WB	30.3
Temple City Blvd NB	59.9
Temple City Blvd SB	56.6

Tyler Ave NB			32.3
Tyler Ave SB			34
Valley Blvd EB			58.7
Valley Blvd WB			59.4
Valley Mall NB			20.8
Valley Mall SB			18.7
Walnut Grove NB			32.9
Walnut Grove SB			32.6
Whitmore St			19.6
South of Santa Anita at Tyler	GF	64.9	
Aerojet Ave NB			13.3
Aerojet Ave SB			13.2
Baldwin Ave NB			37.3
Baldwin Ave SB			35.7
Chico Ave SB			15
Durfee Ave NB			17.5
Durfee Ave NB (South)			0
Durfee Ave SB (South)			18.6
Flair Dr EB			24.9
Flair Dr WB			25
Fletcher Ave NB			9.2
Fletcher Ave SB			8.7
Garvey Ave EB			34.5
Garvey Ave WB			34.8
Gilman Rd NB			13.5
Gilman Rd SB			18.3
Glendon Way EB			18
Glendon Way WB			16.3
I-10 EB			45.6
I-10 EB Ramp			0
I-10 EB Ramp 2			15.8
I-10 WB			45.3
I-10 WB Ramp			9.3
Las Tunas Dr EB			0
Las Tunas Dr WB			1.2
Loftus Dr EB			22.2
Loftus Dr WB			24.9
Lower Azusa Rd EB			42
Lower Azusa Rd WB			41.6
Merced Ave NB			3.4
Merced Ave NB			20.9
Merced Ave SB			22.1
Olive St EB			19.8

Olive St WB			19.4
Olney St WB			3.5
Peck Rd NB			41
Peck Rd SB			40.5
Ramona Blvd EB			37.5
Ramona Blvd WB			37.9
Rio Hondo Ave NB			9.8
Rio Hondo Ave SB			6.4
Roseglen St NB			17.5
Roseglen St NB1			12.9
Roseglen St SB			12.9
Rosemead Blvd NB			32.4
Rosemead Blvd SB			32.4
Rush St EB			0
Rush St WB			0
San Gabriel Blvd NB			0
San Gabriel Blvd SB			0
Santa Anita Ave NB			59.2
Santa Anita Ave SB			59
Telstar Ave EB			20.5
Telstar Ave WB			20.2
Temple City Blvd NB			34.1
Temple City Blvd SB			32.3
Tyler Ave NB			54.6
Tyler Ave SB			59.9
Valley Blvd EB			41.9
Valley Blvd WB			40.9
Valley Mall NB			26.1
Valley Mall SB			23.9
Walnut Grove NB			0
Walnut Grove SB			0
Whitmore St			19.6
SW corner of Baldwin and Lower Azusa	GF	65.3	
Aerojet Ave NB			18
Aerojet Ave SB			17.8
Baldwin Ave NB			59.4
Baldwin Ave SB			59.7
Chico Ave SB			15.9
Durfee Ave NB			0
Durfee Ave NB (South)			0
Durfee Ave SB (South)			0
Flair Dr EB			27.8
Flair Dr WB			27.7

Fletcher Ave NB	11.8
Fletcher Ave SB	11.3
Garvey Ave EB	33
Garvey Ave WB	33
Gilman Rd NB	0
Gilman Rd SB	0
Glendon Way EB	21.7
Glendon Way WB	20.1
I-10 EB	44.5
I-10 EB Ramp	16.5
I-10 EB Ramp 2	19.1
I-10 WB	43.9
I-10 WB Ramp	12.4
Las Tunas Dr EB	30
Las Tunas Dr WB	29.8
Loftus Dr EB	25.5
Loftus Dr WB	28.2
Lower Azusa Rd EB	58.7
Lower Azusa Rd WB	58
Merced Ave NB	4.3
Merced Ave NB	20.8
Merced Ave SB	22.1
Olive St EB	27.5
Olive St WB	27.1
Olney St WB	6.7
Peck Rd NB	33.5
Peck Rd SB	33.1
Ramona Blvd EB	30
Ramona Blvd WB	30.5
Rio Hondo Ave NB	15.6
Rio Hondo Ave SB	12.4
Roseglen St NB	0
Roseglen St NB1	0
Roseglen St SB	0
Rosemead Blvd NB	38.6
Rosemead Blvd SB	38.3
Rush St EB	0
Rush St WB	0
San Gabriel Blvd NB	22.9
San Gabriel Blvd SB	23.4
Santa Anita Ave NB	37
Santa Anita Ave SB	37.3
Telstar Ave EB	28.9

Telstar Ave WB			24.6
Temple City Blvd NB			44.5
Temple City Blvd SB			42.2
Tyler Ave NB			33.6
Tyler Ave SB			35.9
Valley Blvd EB			40.5
Valley Blvd WB			40.7
Valley Mall NB			20.5
Valley Mall SB			18.3
Walnut Grove NB			28.5
Walnut Grove SB			28.4
Whitmore St			16
SW corner of Durfee and Ramona	GF	62.5	
Aerojet Ave NB			0
Aerojet Ave SB			0
Baldwin Ave NB			0
Baldwin Ave SB			0
Chico Ave SB			0
Durfee Ave NB			27
Durfee Ave NB (South)			0
Durfee Ave SB (South)			48.2
Flair Dr EB			0
Flair Dr WB			0
Fletcher Ave NB			0
Fletcher Ave SB			0
Garvey Ave EB			33.3
Garvey Ave WB			33.7
Gilman Rd NB			32
Gilman Rd SB			37
Glendon Way EB			0
Glendon Way WB			0
I-10 EB			44.4
I-10 EB Ramp			0
I-10 EB Ramp 2			0
I-10 WB			44.8
I-10 WB Ramp			0
Las Tunas Dr EB			0
Las Tunas Dr WB			0
Loftus Dr EB			0
Loftus Dr WB			0
Lower Azusa Rd EB			37.3
Lower Azusa Rd WB			37
Merced Ave NB			0

Merced Ave NB			0
Merced Ave SB			0
Olive St EB			0
Olive St WB			0
Olney St WB			0
Peck Rd NB			40
Peck Rd SB			39.3
Ramona Blvd EB			59.6
Ramona Blvd WB			58.3
Rio Hondo Ave NB			0
Rio Hondo Ave SB			0
Roseglen St NB			22.5
Roseglen St NB1			22.4
Roseglen St SB			17.9
Rosemead Blvd NB			0
Rosemead Blvd SB			0
Rush St EB			0
Rush St WB			0
San Gabriel Blvd NB			0
San Gabriel Blvd SB			0
Santa Anita Ave NB			32.2
Santa Anita Ave SB			32.5
Telstar Ave EB			0
Telstar Ave WB			0
Temple City Blvd NB			0
Temple City Blvd SB			0
Tyler Ave NB			32
Tyler Ave SB			33.8
Valley Blvd EB			35.9
Valley Blvd WB			35.3
Valley Mall NB			17.1
Valley Mall SB			15
Walnut Grove NB			0
Walnut Grove SB			0
Whitmore St			0
SW corner of Fletcher and Flair	GF	73.1	
Aerojet Ave NB			20.8
Aerojet Ave SB			20.6
Baldwin Ave NB			42.9
Baldwin Ave SB			42.1
Chico Ave SB			26.3
Durfee Ave NB			0
Durfee Ave NB (South)			0

Durfee Ave SB (South)	0
Flair Dr EB	61.1
Flair Dr WB	58.9
Fletcher Ave NB	49.6
Fletcher Ave SB	49.8
Garvey Ave EB	40.8
Garvey Ave WB	40.8
Gilman Rd NB	0
Gilman Rd SB	0
Glendon Way EB	30.2
Glendon Way WB	28.6
I-10 EB	70.4
I-10 EB Ramp	21.4
I-10 EB Ramp 2	23.7
I-10 WB	68.3
I-10 WB Ramp	38.5
Las Tunas Dr EB	26.2
Las Tunas Dr WB	26
Loftus Dr EB	38.4
Loftus Dr WB	40.4
Lower Azusa Rd EB	34.9
Lower Azusa Rd WB	35
Merced Ave NB	14.8
Merced Ave NB	29.4
Merced Ave SB	30.7
Olive St EB	17
Olive St WB	16.6
Olney St WB	31.6
Peck Rd NB	31.6
Peck Rd SB	31.8
Ramona Blvd EB	29.4
Ramona Blvd WB	29.4
Rio Hondo Ave NB	30.8
Rio Hondo Ave SB	27.1
Roseglen St NB	0
Roseglen St NB1	0
Roseglen St SB	0
Rosemead Blvd NB	43.5
Rosemead Blvd SB	42.9
Rush St EB	28.9
Rush St WB	24
San Gabriel Blvd NB	29.3
San Gabriel Blvd SB	29.9

Santa Anita Ave NB			36.9
Santa Anita Ave SB			37.3
Telstar Ave EB			43.1
Telstar Ave WB			42.7
Temple City Blvd NB			47.2
Temple City Blvd SB			48.3
Tyler Ave NB			32.1
Tyler Ave SB			32.9
Valley Blvd EB			42.2
Valley Blvd WB			42.6
Valley Mall NB			19.9
Valley Mall SB			17.7
Walnut Grove NB			32.8
Walnut Grove SB			32.5
Whitmore St			11.5
SW corner of Gilman and Ramona	GF	63.3	
Aerojet Ave NB			0
Aerojet Ave SB			0
Baldwin Ave NB			0
Baldwin Ave SB			0
Chico Ave SB			0
Durfee Ave NB			29.3
Durfee Ave NB (South)			0
Durfee Ave SB (South)			36.3
Flair Dr EB			0
Flair Dr WB			0
Fletcher Ave NB			0
Fletcher Ave SB			0
Garvey Ave EB			31.2
Garvey Ave WB			31.6
Gilman Rd NB			45.5
Gilman Rd SB			51
Glendon Way EB			0
Glendon Way WB			0
I-10 EB			42
I-10 EB Ramp			0
I-10 EB Ramp 2			0
I-10 WB			42.3
I-10 WB Ramp			0
Las Tunas Dr EB			0
Las Tunas Dr WB			0
Loftus Dr EB			0
Loftus Dr WB			0

Lower Azusa Rd EB			37.2
Lower Azusa Rd WB			37
Merced Ave NB			0
Merced Ave NB			0
Merced Ave SB			0
Olive St EB			0
Olive St WB			0
Olney St WB			0
Peck Rd NB			37.9
Peck Rd SB			37.2
Ramona Blvd EB			60.5
Ramona Blvd WB			58.8
Rio Hondo Ave NB			0
Rio Hondo Ave SB			0
Roseglen St NB			23.3
Roseglen St NB1			24.6
Roseglen St SB			18.7
Rosemead Blvd NB			0
Rosemead Blvd SB			0
Rush St EB			0
Rush St WB			0
San Gabriel Blvd NB			0
San Gabriel Blvd SB			0
Santa Anita Ave NB			30.5
Santa Anita Ave SB			30.8
Telstar Ave EB			0
Telstar Ave WB			0
Temple City Blvd NB			0
Temple City Blvd SB			0
Tyler Ave NB			30.6
Tyler Ave SB			32.4
Valley Blvd EB			33.9
Valley Blvd WB			32.9
Valley Mall NB			15.6
Valley Mall SB			13.5
Walnut Grove NB			0
Walnut Grove SB			0
Whitmore St			0
SW corner of Merced and Garvey	GF	62.1	
Aerojet Ave NB			21.7
Aerojet Ave SB			21.5
Baldwin Ave NB			36.3
Baldwin Ave SB			35.1

Chico Ave SB	29.1
Durfee Ave NB	0
Durfee Ave NB (South)	0
Durfee Ave SB (South)	0
Flair Dr EB	31.2
Flair Dr WB	31.3
Fletcher Ave NB	17.5
Fletcher Ave SB	17
Garvey Ave EB	56.6
Garvey Ave WB	56.2
Gilman Rd NB	0
Gilman Rd SB	0
Glendon Way EB	22.8
Glendon Way WB	20.9
I-10 EB	49.7
I-10 EB Ramp	19
I-10 EB Ramp 2	21.7
I-10 WB	49
I-10 WB Ramp	15.9
Las Tunas Dr EB	0
Las Tunas Dr WB	0
Loftus Dr EB	26.9
Loftus Dr WB	29.5
Lower Azusa Rd EB	31.5
Lower Azusa Rd WB	31.3
Merced Ave NB	17.7
Merced Ave NB	53.4
Merced Ave SB	53.5
Olive St EB	0
Olive St WB	0
Olney St WB	9.8
Peck Rd NB	34.6
Peck Rd SB	34.7
Ramona Blvd EB	31.7
Ramona Blvd WB	32.1
Rio Hondo Ave NB	21.9
Rio Hondo Ave SB	18.3
Roseglen St NB	0
Roseglen St NB1	0
Roseglen St SB	0
Rosemead Blvd NB	41.8
Rosemead Blvd SB	41.6
Rush St EB	32.7

Rush St WB			27.7
San Gabriel Blvd NB			24.8
San Gabriel Blvd SB			25.4
Santa Anita Ave NB			41.6
Santa Anita Ave SB			42.1
Telstar Ave EB			34.5
Telstar Ave WB			31.4
Temple City Blvd NB			34.6
Temple City Blvd SB			33.4
Tyler Ave NB			35
Tyler Ave SB			35
Valley Blvd EB			38.6
Valley Blvd WB			38.4
Valley Mall NB			21.1
Valley Mall SB			18.9
Walnut Grove NB			30.5
Walnut Grove SB			30
Whitmore St			29.2
SW corner of Peck and Garvey	GF	66.5	
Aerojet Ave NB			13.4
Aerojet Ave SB			13.3
Baldwin Ave NB			32.4
Baldwin Ave SB			30.9
Chico Ave SB			18.2
Durfee Ave NB			14.6
Durfee Ave NB (South)			0
Durfee Ave SB (South)			18.6
Flair Dr EB			24
Flair Dr WB			24.4
Fletcher Ave NB			9.7
Fletcher Ave SB			9.2
Garvey Ave EB			59.6
Garvey Ave WB			58.6
Gilman Rd NB			13.5
Gilman Rd SB			18.4
Glendon Way EB			5.1
Glendon Way WB			-1.4
I-10 EB			52.7
I-10 EB Ramp			8.3
I-10 EB Ramp 2			14
I-10 WB			52.2
I-10 WB Ramp			9.1
Las Tunas Dr EB			0

Las Tunas Dr WB			0
Loftus Dr EB			21.4
Loftus Dr WB			24.1
Lower Azusa Rd EB			32.6
Lower Azusa Rd WB			32.2
Merced Ave NB			6.6
Merced Ave NB			25.2
Merced Ave SB			26.4
Olive St EB			0
Olive St WB			0
Olney St WB			3.2
Peck Rd NB			60.6
Peck Rd SB			60.9
Ramona Blvd EB			37.3
Ramona Blvd WB			37.6
Rio Hondo Ave NB			14.7
Rio Hondo Ave SB			11
Roseglen St NB			13.4
Roseglen St NB1			10
Roseglen St SB			8.7
Rosemead Blvd NB			33.8
Rosemead Blvd SB			33.7
Rush St EB			25.4
Rush St WB			20.4
San Gabriel Blvd NB			0
San Gabriel Blvd SB			0
Santa Anita Ave NB			39.8
Santa Anita Ave SB			40.1
Telstar Ave EB			27.5
Telstar Ave WB			24
Temple City Blvd NB			30.2
Temple City Blvd SB			28.8
Tyler Ave NB			44.5
Tyler Ave SB			43.3
Valley Blvd EB			43.6
Valley Blvd WB			42.7
Valley Mall NB			23.8
Valley Mall SB			21.7
Walnut Grove NB			0
Walnut Grove SB			0
Whitmore St			21
SW corner of Rio Hondo and Flair	GF	70.5	
Aerojet Ave NB			40.3

Aerojet Ave SB	40
Baldwin Ave NB	37.8
Baldwin Ave SB	36
Chico Ave SB	24.9
Durfee Ave NB	0
Durfee Ave NB (South)	0
Durfee Ave SB (South)	0
Flair Dr EB	55.4
Flair Dr WB	54
Fletcher Ave NB	18.9
Fletcher Ave SB	18.4
Garvey Ave EB	42.3
Garvey Ave WB	41.6
Gilman Rd NB	0
Gilman Rd SB	0
Glendon Way EB	36.1
Glendon Way WB	34.5
I-10 EB	67.3
I-10 EB Ramp	32.2
I-10 EB Ramp 2	35.8
I-10 WB	65.6
I-10 WB Ramp	19.4
Las Tunas Dr EB	26.3
Las Tunas Dr WB	26.1
Loftus Dr EB	30.4
Loftus Dr WB	32.5
Lower Azusa Rd EB	34.4
Lower Azusa Rd WB	34.5
Merced Ave NB	12.8
Merced Ave NB	15.2
Merced Ave SB	16.4
Olive St EB	16.5
Olive St WB	16.1
Olney St WB	12.5
Peck Rd NB	21
Peck Rd SB	21.6
Ramona Blvd EB	13
Ramona Blvd WB	13.6
Rio Hondo Ave NB	57.7
Rio Hondo Ave SB	54.5
Roseglen St NB	0
Roseglen St NB1	0
Roseglen St SB	0

Rosemead Blvd NB			51.4
Rosemead Blvd SB			51
Rush St EB			29.1
Rush St WB			24.1
San Gabriel Blvd NB			34.6
San Gabriel Blvd SB			35.2
Santa Anita Ave NB			27.4
Santa Anita Ave SB			28
Telstar Ave EB			49.6
Telstar Ave WB			47.2
Temple City Blvd NB			40.7
Temple City Blvd SB			40
Tyler Ave NB			23.1
Tyler Ave SB			24.9
Valley Blvd EB			41
Valley Blvd WB			41.6
Valley Mall NB			7.2
Valley Mall SB			4.8
Walnut Grove NB			39.3
Walnut Grove SB			38.8
Whitmore St			40.3
SW corner of Rosemead and Las Tunas Dr	GF	64.7	
Aerojet Ave NB			14.8
Aerojet Ave SB			14.7
Baldwin Ave NB			33.4
Baldwin Ave SB			32.1
Chico Ave SB			0
Durfee Ave NB			0
Durfee Ave NB (South)			0
Durfee Ave SB (South)			0
Flair Dr EB			22.8
Flair Dr WB			22.2
Fletcher Ave NB			6.4
Fletcher Ave SB			5.9
Garvey Ave EB			0
Garvey Ave WB			0
Gilman Rd NB			0
Gilman Rd SB			0
Glendon Way EB			20.3
Glendon Way WB			18.6
I-10 EB			38.1
I-10 EB Ramp			14.8
I-10 EB Ramp 2			17.1

I-10 WB	37.5
I-10 WB Ramp	6.4
Las Tunas Dr EB	57.1
Las Tunas Dr WB	55.8
Loftus Dr EB	17.9
Loftus Dr WB	20.4
Lower Azusa Rd EB	33.8
Lower Azusa Rd WB	34
Merced Ave NB	0
Merced Ave NB	0
Merced Ave SB	0
Olive St EB	21.1
Olive St WB	20.7
Olney St WB	0.6
Peck Rd NB	0
Peck Rd SB	0
Ramona Blvd EB	0
Ramona Blvd WB	0
Rio Hondo Ave NB	17.1
Rio Hondo Ave SB	13.3
Roseglen St NB	0
Roseglen St NB1	0
Roseglen St SB	0
Rosemead Blvd NB	59.6
Rosemead Blvd SB	60.5
Rush St EB	0
Rush St WB	0
San Gabriel Blvd NB	28.2
San Gabriel Blvd SB	28.7
Santa Anita Ave NB	0
Santa Anita Ave SB	0
Telstar Ave EB	25.9
Telstar Ave WB	21.5
Temple City Blvd NB	33.8
Temple City Blvd SB	32
Tyler Ave NB	0
Tyler Ave SB	0
Valley Blvd EB	33.9
Valley Blvd WB	34.5
Valley Mall NB	0
Valley Mall SB	0
Walnut Grove NB	29.5
Walnut Grove SB	29.5

Whitmore St			0
SW corner of Rosemead and Valley	GF	68.8	
Aerojet Ave NB			26.6
Aerojet Ave SB			26.5
Baldwin Ave NB			35.9
Baldwin Ave SB			34.5
Chico Ave SB			19
Durfee Ave NB			0
Durfee Ave NB (South)			0
Durfee Ave SB (South)			0
Flair Dr EB			32.2
Flair Dr WB			31.9
Fletcher Ave NB			14
Fletcher Ave SB			13.4
Garvey Ave EB			36.5
Garvey Ave WB			35.8
Gilman Rd NB			0
Gilman Rd SB			0
Glendon Way EB			36.2
Glendon Way WB			34.7
I-10 EB			50.1
I-10 EB Ramp			28.1
I-10 EB Ramp 2			30.8
I-10 WB			49.5
I-10 WB Ramp			15.1
Las Tunas Dr EB			29.7
Las Tunas Dr WB			29.5
Loftus Dr EB			25.3
Loftus Dr WB			27.6
Lower Azusa Rd EB			38.5
Lower Azusa Rd WB			38.3
Merced Ave NB			7.3
Merced Ave NB			18.8
Merced Ave SB			20
Olive St EB			17.7
Olive St WB			17.3
Olney St WB			9.3
Peck Rd NB			0
Peck Rd SB			0
Ramona Blvd EB			21.6
Ramona Blvd WB			22.2
Rio Hondo Ave NB			27.4
Rio Hondo Ave SB			23.6

Roseglen St NB			0
Roseglen St NB1			0
Roseglen St SB			0
Rosemead Blvd NB			64.2
Rosemead Blvd SB			64.7
Rush St EB			24.7
Rush St WB			19.8
San Gabriel Blvd NB			35.7
San Gabriel Blvd SB			36.2
Santa Anita Ave NB			31.3
Santa Anita Ave SB			31.7
Telstar Ave EB			36.6
Telstar Ave WB			31.8
Temple City Blvd NB			38.3
Temple City Blvd SB			36.7
Tyler Ave NB			25.9
Tyler Ave SB			27.1
Valley Blvd EB			60.2
Valley Blvd WB			58.9
Valley Mall NB			15
Valley Mall SB			12.8
Walnut Grove NB			41.8
Walnut Grove SB			41.4
Whitmore St			28.4
SW corner of Santa Anita and Garvey	GF	65.2	
Aerojet Ave NB			18.3
Aerojet Ave SB			18.2
Baldwin Ave NB			35.4
Baldwin Ave SB			34
Chico Ave SB			23.6
Durfee Ave NB			0
Durfee Ave NB (South)			0
Durfee Ave SB (South)			15.1
Flair Dr EB			28.5
Flair Dr WB			28.7
Fletcher Ave NB			14.2
Fletcher Ave SB			13.7
Garvey Ave EB			59.6
Garvey Ave WB			58.6
Gilman Rd NB			7.8
Gilman Rd SB			12.6
Glendon Way EB			13.1
Glendon Way WB			9.8

I-10 EB	51.5
I-10 EB Ramp	16.7
I-10 EB Ramp 2	19.3
I-10 WB	50.8
I-10 WB Ramp	13.3
Las Tunas Dr EB	0
Las Tunas Dr WB	0
Loftus Dr EB	25.1
Loftus Dr WB	27.7
Lower Azusa Rd EB	31.9
Lower Azusa Rd WB	31.8
Merced Ave NB	12.1
Merced Ave NB	34.1
Merced Ave SB	35.2
Olive St EB	0
Olive St WB	0
Olney St WB	7.3
Peck Rd NB	38.1
Peck Rd SB	38.4
Ramona Blvd EB	34.7
Ramona Blvd WB	35.1
Rio Hondo Ave NB	18.8
Rio Hondo Ave SB	15.1
Roseglen St NB	0
Roseglen St NB1	0
Roseglen St SB	0
Rosemead Blvd NB	38.4
Rosemead Blvd SB	38.3
Rush St EB	29.6
Rush St WB	24.6
San Gabriel Blvd NB	0
San Gabriel Blvd SB	0
Santa Anita Ave NB	58
Santa Anita Ave SB	58.5
Telstar Ave EB	31.5
Telstar Ave WB	28.2
Temple City Blvd NB	33.3
Temple City Blvd SB	31.9
Tyler Ave NB	40.3
Tyler Ave SB	39.6
Valley Blvd EB	40.1
Valley Blvd WB	39.5
Valley Mall NB	23.5

Valley Mall SB			21.4
Walnut Grove NB			27.8
Walnut Grove SB			27.2
Whitmore St			25.3
SW corner of Santa Anita and Lower Azusa	GF	64.7	
Aerojet Ave NB			0
Aerojet Ave SB			0
Baldwin Ave NB			35.6
Baldwin Ave SB			34.1
Chico Ave SB			0
Durfee Ave NB			18.6
Durfee Ave NB (South)			0
Durfee Ave SB (South)			17.9
Flair Dr EB			21.3
Flair Dr WB			21.8
Fletcher Ave NB			6.7
Fletcher Ave SB			6.2
Garvey Ave EB			30.7
Garvey Ave WB			31.1
Gilman Rd NB			13.2
Gilman Rd SB			18
Glendon Way EB			0
Glendon Way WB			0
I-10 EB			41.9
I-10 EB Ramp			0
I-10 EB Ramp 2			0
I-10 WB			41.6
I-10 WB Ramp			6.8
Las Tunas Dr EB			18.1
Las Tunas Dr WB			17.9
Loftus Dr EB			19.3
Loftus Dr WB			22
Lower Azusa Rd EB			60.6
Lower Azusa Rd WB			59.1
Merced Ave NB			0
Merced Ave NB			17.9
Merced Ave SB			19.2
Olive St EB			20.6
Olive St WB			20.2
Olney St WB			0.9
Peck Rd NB			40.4
Peck Rd SB			39.8
Ramona Blvd EB			34.3

Ramona Blvd WB			34.5
Rio Hondo Ave NB			7
Rio Hondo Ave SB			3.7
Roseglen St NB			19.5
Roseglen St NB1			14
Roseglen St SB			14.9
Rosemead Blvd NB			0
Rosemead Blvd SB			0
Rush St EB			0
Rush St WB			0
San Gabriel Blvd NB			0
San Gabriel Blvd SB			0
Santa Anita Ave NB			39.2
Santa Anita Ave SB			39.7
Telstar Ave EB			13.9
Telstar Ave WB			13.9
Temple City Blvd NB			32.3
Temple City Blvd SB			30.5
Tyler Ave NB			54.8
Tyler Ave SB			57.8
Valley Blvd EB			36.8
Valley Blvd WB			36.1
Valley Mall NB			20.1
Valley Mall SB			17.9
Walnut Grove NB			0
Walnut Grove SB			0
Whitmore St			0
SW corner of Telstar and Flair	GF	72.9	
Aerojet Ave NB			19.2
Aerojet Ave SB			19.1
Baldwin Ave NB			47
Baldwin Ave SB			46.5
Chico Ave SB			26.1
Durfee Ave NB			0
Durfee Ave NB (South)			0
Durfee Ave SB (South)			0
Flair Dr EB			61.1
Flair Dr WB			59.7
Fletcher Ave NB			34.1
Fletcher Ave SB			33.4
Garvey Ave EB			41.7
Garvey Ave WB			41.6
Gilman Rd NB			0
Gilman Rd SB			0
Glendon Way EB			28.2

Glendon Way WB			26.5
I-10 EB			70
I-10 EB Ramp			19.7
I-10 EB Ramp 2			21.9
I-10 WB			68
I-10 WB Ramp			38
Las Tunas Dr EB			24.8
Las Tunas Dr WB			24.7
Loftus Dr EB			41.7
Loftus Dr WB			43.6
Lower Azusa Rd EB			35.2
Lower Azusa Rd WB			35.2
Merced Ave NB			14.5
Merced Ave NB			31.2
Merced Ave SB			32.5
Olive St EB			17.3
Olive St WB			16.8
Olney St WB			30.4
Peck Rd NB			32.4
Peck Rd SB			32.4
Ramona Blvd EB			31.3
Ramona Blvd WB			31
Rio Hondo Ave NB			25.4
Rio Hondo Ave SB			21.7
Roseglen St NB			0
Roseglen St NB1			0
Roseglen St SB			0
Rosemead Blvd NB			43.3
Rosemead Blvd SB			42.9
Rush St EB			28.7
Rush St WB			23.8
San Gabriel Blvd NB			28.2
San Gabriel Blvd SB			28.8
Santa Anita Ave NB			38.2
Santa Anita Ave SB			38.6
Telstar Ave EB			55.5
Telstar Ave WB			56.7
Temple City Blvd NB			48.7
Temple City Blvd SB			49.4
Tyler Ave NB			32.8
Tyler Ave SB			33.8
Valley Blvd EB			42.9
Valley Blvd WB			43.1
Valley Mall NB			21.2
Valley Mall SB			19.1
Walnut Grove NB			32.3
Walnut Grove SB			31.9
Whitmore St			32.8
SW corner of Temple City and Lower Azusa	GF	63.9	

Aerojet Ave NB	20.2
Aerojet Ave SB	20.1
Baldwin Ave NB	43.7
Baldwin Ave SB	42.2
Chico Ave SB	16.8
Durfee Ave NB	0
Durfee Ave NB (South)	0
Durfee Ave SB (South)	0
Flair Dr EB	29.9
Flair Dr WB	29.4
Fletcher Ave NB	13.5
Fletcher Ave SB	13
Garvey Ave EB	33.7
Garvey Ave WB	33.5
Gilman Rd NB	0
Gilman Rd SB	0
Glendon Way EB	24.5
Glendon Way WB	22.9
I-10 EB	45.3
I-10 EB Ramp	19
I-10 EB Ramp 2	21.6
I-10 WB	44.6
I-10 WB Ramp	14.2
Las Tunas Dr EB	31.6
Las Tunas Dr WB	31.4
Loftus Dr EB	26.6
Loftus Dr WB	29.2
Lower Azusa Rd EB	56.9
Lower Azusa Rd WB	56.8
Merced Ave NB	5.2
Merced Ave NB	21.1
Merced Ave SB	22.3
Olive St EB	25.4
Olive St WB	24.9
Olney St WB	8.5
Peck Rd NB	31.1
Peck Rd SB	30.9
Ramona Blvd EB	27.1
Ramona Blvd WB	27.7
Rio Hondo Ave NB	20.7
Rio Hondo Ave SB	17.5
Roseglen St NB	0
Roseglen St NB1	0

Roseglen St SB			0
Rosemead Blvd NB			41.8
Rosemead Blvd SB			41.5
Rush St EB			21.3
Rush St WB			16.4
San Gabriel Blvd NB			28.8
San Gabriel Blvd SB			29.4
Santa Anita Ave NB			34.7
Santa Anita Ave SB			35
Telstar Ave EB			31.1
Telstar Ave WB			27.1
Temple City Blvd NB			58.9
Temple City Blvd SB			56.9
Tyler Ave NB			31.1
Tyler Ave SB			33
Valley Blvd EB			42.2
Valley Blvd WB			42.8
Valley Mall NB			18.4
Valley Mall SB			16.2
Walnut Grove NB			32.1
Walnut Grove SB			31.8
Whitmore St			23.3
SW of Peck at I-10	GF	70.4	
Aerojet Ave NB			12.2
Aerojet Ave SB			12
Baldwin Ave NB			33.7
Baldwin Ave SB			32.2
Chico Ave SB			17.7
Durfee Ave NB			15.7
Durfee Ave NB (South)			0
Durfee Ave SB (South)			19.6
Flair Dr EB			24.9
Flair Dr WB			25.5
Fletcher Ave NB			10.3
Fletcher Ave SB			9.8
Garvey Ave EB			45.8
Garvey Ave WB			46.4
Gilman Rd NB			14.3
Gilman Rd SB			19.2
Glendon Way EB			0
Glendon Way WB			0
I-10 EB			67.6
I-10 EB Ramp			4

I-10 EB Ramp 2	6.8
I-10 WB	65.5
I-10 WB Ramp	9.8
Las Tunas Dr EB	0
Las Tunas Dr WB	0
Loftus Dr EB	22
Loftus Dr WB	24.7
Lower Azusa Rd EB	34.2
Lower Azusa Rd WB	34.1
Merced Ave NB	6.1
Merced Ave NB	24.8
Merced Ave SB	26
Olive St EB	11.7
Olive St WB	11.3
Olney St WB	4
Peck Rd NB	57.4
Peck Rd SB	59.4
Ramona Blvd EB	41.7
Ramona Blvd WB	42
Rio Hondo Ave NB	14.8
Rio Hondo Ave SB	11.1
Roseglen St NB	14.6
Roseglen St NB1	11.1
Roseglen St SB	9.9
Rosemead Blvd NB	33.7
Rosemead Blvd SB	33.6
Rush St EB	24.5
Rush St WB	19.5
San Gabriel Blvd NB	0
San Gabriel Blvd SB	0
Santa Anita Ave NB	40.8
Santa Anita Ave SB	41.3
Telstar Ave EB	27.7
Telstar Ave WB	24.3
Temple City Blvd NB	31.6
Temple City Blvd SB	30
Tyler Ave NB	44.4
Tyler Ave SB	43
Valley Blvd EB	49.9
Valley Blvd WB	48.8
Valley Mall NB	28.1
Valley Mall SB	26.1
Walnut Grove NB	0

Walnut Grove SB			0
Whitmore St			21.1
SW of Santa Anita at I-10	GF	69.2	
Aerojet Ave NB			16.5
Aerojet Ave SB			16.3
Baldwin Ave NB			38.3
Baldwin Ave SB			37
Chico Ave SB			22.5
Durfee Ave NB			0
Durfee Ave NB (South)			0
Durfee Ave SB (South)			15.6
Flair Dr EB			30.7
Flair Dr WB			30.9
Fletcher Ave NB			15.6
Fletcher Ave SB			15
Garvey Ave EB			45.3
Garvey Ave WB			45.8
Gilman Rd NB			10.7
Gilman Rd SB			15.5
Glendon Way EB			17.7
Glendon Way WB			16.9
I-10 EB			65.8
I-10 EB Ramp			3.9
I-10 EB Ramp 2			7.5
I-10 WB			64.4
I-10 WB Ramp			15.1
Las Tunas Dr EB			0
Las Tunas Dr WB			0
Loftus Dr EB			28.2
Loftus Dr WB			30.9
Lower Azusa Rd EB			34.3
Lower Azusa Rd WB			34.2
Merced Ave NB			11
Merced Ave NB			32.9
Merced Ave SB			33.9
Olive St EB			15.9
Olive St WB			15.5
Olney St WB			9.1
Peck Rd NB			38.6
Peck Rd SB			38.9
Ramona Blvd EB			39.1
Ramona Blvd WB			39.5
Rio Hondo Ave NB			19.5

Rio Hondo Ave SB			15.7
Roseglen St NB			0
Roseglen St NB1			0
Roseglen St SB			0
Rosemead Blvd NB			38.4
Rosemead Blvd SB			38.2
Rush St EB			27.7
Rush St WB			22.8
San Gabriel Blvd NB			0
San Gabriel Blvd SB			0
Santa Anita Ave NB			58.1
Santa Anita Ave SB			59.6
Telstar Ave EB			32.2
Telstar Ave WB			29.1
Temple City Blvd NB			35.4
Temple City Blvd SB			34.1
Tyler Ave NB			41.3
Tyler Ave SB			40.5
Valley Blvd EB			43.3
Valley Blvd WB			42.7
Valley Mall NB			27.8
Valley Mall SB			25.8
Walnut Grove NB			28.6
Walnut Grove SB			28.2
Whitmore St			25.4
Western Residential tower (west side)	GF	64.3	
Aerojet Ave NB			37
Aerojet Ave SB			36.7
Baldwin Ave NB			7.4
Baldwin Ave SB			6.1
Chico Ave SB			-5.3
Durfee Ave NB			0
Durfee Ave NB (South)			0
Durfee Ave SB (South)			0
Flair Dr EB			43.9
Flair Dr WB			43
Fletcher Ave NB			-5.5
Fletcher Ave SB			-8.9
Garvey Ave EB			40.5
Garvey Ave WB			39.8
Gilman Rd NB			0
Gilman Rd SB			0
Glendon Way EB			32.2

Glendon Way WB	30.5
I-10 EB	57
I-10 EB Ramp	28.9
I-10 EB Ramp 2	32.4
I-10 WB	55.6
I-10 WB Ramp	-8.6
Las Tunas Dr EB	22.9
Las Tunas Dr WB	21.7
Loftus Dr EB	-0.8
Loftus Dr WB	1.7
Lower Azusa Rd EB	28.6
Lower Azusa Rd WB	28.5
Merced Ave NB	-16.5
Merced Ave NB	-3.7
Merced Ave SB	-2.6
Olive St EB	-15.1
Olive St WB	-15.5
Olney St WB	-15.3
Peck Rd NB	-2
Peck Rd SB	-1.9
Ramona Blvd EB	-4.3
Ramona Blvd WB	-4
Rio Hondo Ave NB	60.1
Rio Hondo Ave SB	55.2
Roseglen St NB	0
Roseglen St NB1	0
Roseglen St SB	0
Rosemead Blvd NB	49.7
Rosemead Blvd SB	49.5
Rush St EB	26.2
Rush St WB	21.2
San Gabriel Blvd NB	31.5
San Gabriel Blvd SB	32
Santa Anita Ave NB	3.2
Santa Anita Ave SB	3.6
Telstar Ave EB	50.1
Telstar Ave WB	49
Temple City Blvd NB	8.1
Temple City Blvd SB	7.3
Tyler Ave NB	-1.6
Tyler Ave SB	-0.5
Valley Blvd EB	36.8
Valley Blvd WB	37.4

Valley Mall NB	-14.1
Valley Mall SB	-16.3
Walnut Grove NB	36.5
Walnut Grove SB	36
Whitmore St	40.5

05360 Flair Spectrum Specific Plan
Year 2019 Plus Project Buildout
Road Emission Table

Stationing km	ADT Veh/24h	Traffic values Vehicles type	Vehicle name	day Veh/h	night Veh/h	Speed km/h	Control device	Constr. Speed km/h	Affect. veh. %	Road surface	Gradient Min / Max %
San Gabriel Blvd SB	Traffic direction:	In entry direction									
2+808	*41115*	*Total*	-	*2741*	-	-	*Traffic light*	*0*	-	*Average (of DGAC and PCC)*	*0*
2+808	41115	Automobiles	-	1600	-	56	Traffic light	0	-	Average (of DGAC and PCC)	0
2+808	41115	Medium trucks	-	977	-	56	Traffic light	0	-	Average (of DGAC and PCC)	0
2+808	41115	Heavy trucks	-	128	-	56	Traffic light	0	-	Average (of DGAC and PCC)	0
2+808	41115	Buses	-	19	-	56	Traffic light	0	-	Average (of DGAC and PCC)	0
2+808	41115	Motorcycles	-	17	-	56	Traffic light	0	-	Average (of DGAC and PCC)	0
2+808	41115	Auxiliary Vehicle	-	-	-	56	Traffic light	0	-	Average (of DGAC and PCC)	0
3+411	*41115*	*Total*	-	*2741*	-	-	*Traffic light*	*0*	-	*Average (of DGAC and PCC)*	*0*
3+411	41115	Automobiles	-	1600	-	56	Traffic light	0	-	Average (of DGAC and PCC)	0
3+411	41115	Medium trucks	-	977	-	56	Traffic light	0	-	Average (of DGAC and PCC)	0
3+411	41115	Heavy trucks	-	128	-	56	Traffic light	0	-	Average (of DGAC and PCC)	0
3+411	41115	Buses	-	19	-	56	Traffic light	0	-	Average (of DGAC and PCC)	0
3+411	41115	Motorcycles	-	17	-	56	Traffic light	0	-	Average (of DGAC and PCC)	0
3+411	41115	Auxiliary Vehicle	-	-	-	56	Traffic light	0	-	Average (of DGAC and PCC)	0
5+357	-						-	-	-	-	-
0+000	*41115*	*Total*	-	*2741*	-	-	*Traffic light*	*0*	-	*Average (of DGAC and PCC)*	*0*
0+000	41115	Automobiles	-	1600	-	56	Traffic light	0	-	Average (of DGAC and PCC)	0
0+000	41115	Medium trucks	-	977	-	56	Traffic light	0	-	Average (of DGAC and PCC)	0
0+000	41115	Heavy trucks	-	128	-	56	Traffic light	0	-	Average (of DGAC and PCC)	0
0+000	41115	Buses	-	19	-	56	Traffic light	0	-	Average (of DGAC and PCC)	0
0+000	41115	Motorcycles	-	17	-	56	Traffic light	0	-	Average (of DGAC and PCC)	0
0+000	41115	Auxiliary Vehicle	-	-	-	56	Traffic light	0	-	Average (of DGAC and PCC)	0
San Gabriel Blvd NB	Traffic direction:	In entry direction									
2+808	*35805*	*Total*	-	*2387*	-	-	*Traffic light*	*0*	-	*Average (of DGAC and PCC)*	*0*
2+808	35805	Automobiles	-	1393	-	56	Traffic light	0	-	Average (of DGAC and PCC)	0
2+808	35805	Medium trucks	-	851	-	56	Traffic light	0	-	Average (of DGAC and PCC)	0
2+808	35805	Heavy trucks	-	112	-	56	Traffic light	0	-	Average (of DGAC and PCC)	0
2+808	35805	Buses	-	16	-	56	Traffic light	0	-	Average (of DGAC and PCC)	0
2+808	35805	Motorcycles	-	15	-	56	Traffic light	0	-	Average (of DGAC and PCC)	0
2+808	35805	Auxiliary Vehicle	-	-	-	56	Traffic light	0	-	Average (of DGAC and PCC)	0
4+792	*35805*	*Total*	-	*2387*	-	-	*Traffic light*	*0*	-	*Average (of DGAC and PCC)*	*0*
4+792	35805	Automobiles	-	1393	-	56	Traffic light	0	-	Average (of DGAC and PCC)	0
4+792	35805	Medium trucks	-	851	-	56	Traffic light	0	-	Average (of DGAC and PCC)	0
4+792	35805	Heavy trucks	-	112	-	56	Traffic light	0	-	Average (of DGAC and PCC)	0
4+792	35805	Buses	-	16	-	56	Traffic light	0	-	Average (of DGAC and PCC)	0
4+792	35805	Motorcycles	-	15	-	56	Traffic light	0	-	Average (of DGAC and PCC)	0
4+792	35805	Auxiliary Vehicle	-	-	-	56	Traffic light	0	-	Average (of DGAC and PCC)	0
5+314	-						-	-	-	-	-
0+000	*35805*	*Total*	-	*2387*	-	-	*Traffic light*	*0*	-	*Average (of DGAC and PCC)*	*0*
0+000	35805	Automobiles	-	1393	-	56	Traffic light	0	-	Average (of DGAC and PCC)	0
0+000	35805	Medium trucks	-	851	-	56	Traffic light	0	-	Average (of DGAC and PCC)	0
0+000	35805	Heavy trucks	-	112	-	56	Traffic light	0	-	Average (of DGAC and PCC)	0
0+000	35805	Buses	-	16	-	56	Traffic light	0	-	Average (of DGAC and PCC)	0
0+000	35805	Motorcycles	-	15	-	56	Traffic light	0	-	Average (of DGAC and PCC)	0
0+000	35805	Auxiliary Vehicle	-	-	-	56	Traffic light	0	-	Average (of DGAC and PCC)	0
Walnut Grove SB	Traffic direction:	In entry direction									
2+808	*30060*	*Total*	-	*2004*	-	-	*Traffic light*	*0*	-	*Average (of DGAC and PCC)*	*0*
2+808	30060	Automobiles	-	1169	-	64	Traffic light	0	-	Average (of DGAC and PCC)	0
2+808	30060	Medium trucks	-	714	-	64	Traffic light	0	-	Average (of DGAC and PCC)	0
2+808	30060	Heavy trucks	-	94	-	64	Traffic light	0	-	Average (of DGAC and PCC)	0
2+808	30060	Buses	-	14	-	64	Traffic light	0	-	Average (of DGAC and PCC)	0
2+808	30060	Motorcycles	-	13	-	64	Traffic light	0	-	Average (of DGAC and PCC)	0
2+808	30060	Auxiliary Vehicle	-	-	-	64	Traffic light	0	-	Average (of DGAC and PCC)	0

3+511	*30060*	*Total*	-	*2004*	-	-	*Traffic light*	*0*	-	*Average (of DGAC and PCC)*	*0*
3+511	30060	Automobiles	-	1169	-		64 Traffic light	0	-	Average (of DGAC and PCC)	0
3+511	30060	Medium trucks	-	714	-		64 Traffic light	0	-	Average (of DGAC and PCC)	0
3+511	30060	Heavy trucks	-	94	-		64 Traffic light	0	-	Average (of DGAC and PCC)	0
3+511	30060	Buses	-	14	-		64 Traffic light	0	-	Average (of DGAC and PCC)	0
3+511	30060	Motorcycles	-	13	-		64 Traffic light	0	-	Average (of DGAC and PCC)	0
3+511	30060	Auxiliary Vehicle	-	-	-		64 Traffic light	0	-	Average (of DGAC and PCC)	0
5+905	*29070*	*Total*	-	*1938*	-	-	*Traffic light*	*0*	-	*Average (of DGAC and PCC)*	*0*
5+905	29070	Automobiles	-	1131	-		64 Traffic light	0	-	Average (of DGAC and PCC)	0
5+905	29070	Medium trucks	-	691	-		64 Traffic light	0	-	Average (of DGAC and PCC)	0
5+905	29070	Heavy trucks	-	91	-		64 Traffic light	0	-	Average (of DGAC and PCC)	0
5+905	29070	Buses	-	13	-		64 Traffic light	0	-	Average (of DGAC and PCC)	0
5+905	29070	Motorcycles	-	12	-		64 Traffic light	0	-	Average (of DGAC and PCC)	0
5+905	29070	Auxiliary Vehicle	-	-	-		64 Traffic light	0	-	Average (of DGAC and PCC)	0
6+606	-						-	-	-	-	-
0+000	*29070*	*Total*	-	*1938*	-	-	*Traffic light*	*0*	-	*Average (of DGAC and PCC)*	*0*
0+000	29070	Automobiles	-	1131	-		64 Traffic light	0	-	Average (of DGAC and PCC)	0
0+000	29070	Medium trucks	-	691	-		64 Traffic light	0	-	Average (of DGAC and PCC)	0
0+000	29070	Heavy trucks	-	91	-		64 Traffic light	0	-	Average (of DGAC and PCC)	0
0+000	29070	Buses	-	13	-		64 Traffic light	0	-	Average (of DGAC and PCC)	0
0+000	29070	Motorcycles	-	12	-		64 Traffic light	0	-	Average (of DGAC and PCC)	0
0+000	29070	Auxiliary Vehicle	-	-	-		64 Traffic light	0	-	Average (of DGAC and PCC)	0
Walnut Grove NB	Traffic direction:	In entry direction									
2+808	*33375*	*Total*	-	*2225*	-	-	*Traffic light*	*0*	-	*Average (of DGAC and PCC)*	*0*
2+808	33375	Automobiles	-	1299	-		64 Traffic light	0	-	Average (of DGAC and PCC)	0
2+808	33375	Medium trucks	-	793	-		64 Traffic light	0	-	Average (of DGAC and PCC)	0
2+808	33375	Heavy trucks	-	104	-		64 Traffic light	0	-	Average (of DGAC and PCC)	0
2+808	33375	Buses	-	15	-		64 Traffic light	0	-	Average (of DGAC and PCC)	0
2+808	33375	Motorcycles	-	14	-		64 Traffic light	0	-	Average (of DGAC and PCC)	0
2+808	33375	Auxiliary Vehicle	-	-	-		64 Traffic light	0	-	Average (of DGAC and PCC)	0
3+507	*33375*	*Total*	-	*2225*	-	-	*Traffic light*	*0*	-	*Average (of DGAC and PCC)*	*0*
3+507	33375	Automobiles	-	1299	-		64 Traffic light	0	-	Average (of DGAC and PCC)	0
3+507	33375	Medium trucks	-	793	-		64 Traffic light	0	-	Average (of DGAC and PCC)	0
3+507	33375	Heavy trucks	-	104	-		64 Traffic light	0	-	Average (of DGAC and PCC)	0
3+507	33375	Buses	-	15	-		64 Traffic light	0	-	Average (of DGAC and PCC)	0
3+507	33375	Motorcycles	-	14	-		64 Traffic light	0	-	Average (of DGAC and PCC)	0
3+507	33375	Auxiliary Vehicle	-	-	-		64 Traffic light	0	-	Average (of DGAC and PCC)	0
5+919	*26010*	*Total*	-	*1734*	-	-	*Traffic light*	*0*	-	*Average (of DGAC and PCC)*	*0*
5+919	26010	Automobiles	-	1012	-		64 Traffic light	0	-	Average (of DGAC and PCC)	0
5+919	26010	Medium trucks	-	618	-		64 Traffic light	0	-	Average (of DGAC and PCC)	0
5+919	26010	Heavy trucks	-	81	-		64 Traffic light	0	-	Average (of DGAC and PCC)	0
5+919	26010	Buses	-	12	-		64 Traffic light	0	-	Average (of DGAC and PCC)	0
5+919	26010	Motorcycles	-	11	-		64 Traffic light	0	-	Average (of DGAC and PCC)	0
5+919	26010	Auxiliary Vehicle	-	-	-		64 Traffic light	0	-	Average (of DGAC and PCC)	0
6+589	-						-	-	-	-	-
0+000	*26010*	*Total*	-	*1734*	-	-	*Traffic light*	*0*	-	*Average (of DGAC and PCC)*	*0*
0+000	26010	Automobiles	-	1012	-		64 Traffic light	0	-	Average (of DGAC and PCC)	0
0+000	26010	Medium trucks	-	618	-		64 Traffic light	0	-	Average (of DGAC and PCC)	0
0+000	26010	Heavy trucks	-	81	-		64 Traffic light	0	-	Average (of DGAC and PCC)	0
0+000	26010	Buses	-	12	-		64 Traffic light	0	-	Average (of DGAC and PCC)	0
0+000	26010	Motorcycles	-	11	-		64 Traffic light	0	-	Average (of DGAC and PCC)	0
0+000	26010	Auxiliary Vehicle	-	-	-		64 Traffic light	0	-	Average (of DGAC and PCC)	0
Valley Blvd WB	Traffic direction:	In entry direction									
2+808	*30675*	*Total*	-	*2045*	-	-	*none*	-	-	*Average (of DGAC and PCC)*	*0*
2+808	30675	Automobiles	-	1193	-		56 none	-	-	Average (of DGAC and PCC)	0
2+808	30675	Medium trucks	-	729	-		56 none	-	-	Average (of DGAC and PCC)	0
2+808	30675	Heavy trucks	-	96	-		56 none	-	-	Average (of DGAC and PCC)	0
2+808	30675	Buses	-	14	-		56 none	-	-	Average (of DGAC and PCC)	0
2+808	30675	Motorcycles	-	13	-		56 none	-	-	Average (of DGAC and PCC)	0
2+808	30675	Auxiliary Vehicle	-	-	-		56 none	-	-	Average (of DGAC and PCC)	0
3+368	*30675*	*Total*	-	*2045*	-	-	*Traffic light*	*0*	-	*Average (of DGAC and PCC)*	*0*

3+368	30675	Automobiles	-		1193	-		56	Traffic light	0	-	Average (of DGAC and PCC)	0
3+368	30675	Medium trucks	-		729	-		56	Traffic light	0	-	Average (of DGAC and PCC)	0
3+368	30675	Heavy trucks	-		96	-		56	Traffic light	0	-	Average (of DGAC and PCC)	0
3+368	30675	Buses	-		14	-		56	Traffic light	0	-	Average (of DGAC and PCC)	0
3+368	30675	Motorcycles	-		13	-		56	Traffic light	0	-	Average (of DGAC and PCC)	0
3+368	30675	Auxiliary Vehicle	-	-	-			56	Traffic light	0	-	Average (of DGAC and PCC)	0
4+654	*34860*	*Total*	-		*2324*	-	-		*Traffic light*	*0*	-	*Average (of DGAC and PCC)*	*0*
4+654	34860	Automobiles	-		1356	-		56	Traffic light	0	-	Average (of DGAC and PCC)	0
4+654	34860	Medium trucks	-		828	-		56	Traffic light	0	-	Average (of DGAC and PCC)	0
4+654	34860	Heavy trucks	-		109	-		56	Traffic light	0	-	Average (of DGAC and PCC)	0
4+654	34860	Buses	-		16	-		56	Traffic light	0	-	Average (of DGAC and PCC)	0
4+654	34860	Motorcycles	-		15	-		56	Traffic light	0	-	Average (of DGAC and PCC)	0
4+654	34860	Auxiliary Vehicle	-	-	-			56	Traffic light	0	-	Average (of DGAC and PCC)	0
5+206	*34860*	*Total*	-		*2324*	-	-		*none*	-	-	*Average (of DGAC and PCC)*	*0*
5+206	34860	Automobiles	-		1356	-		56	none	-	-	Average (of DGAC and PCC)	0
5+206	34860	Medium trucks	-		828	-		56	none	-	-	Average (of DGAC and PCC)	0
5+206	34860	Heavy trucks	-		109	-		56	none	-	-	Average (of DGAC and PCC)	0
5+206	34860	Buses	-		16	-		56	none	-	-	Average (of DGAC and PCC)	0
5+206	34860	Motorcycles	-		15	-		56	none	-	-	Average (of DGAC and PCC)	0
5+206	34860	Auxiliary Vehicle	-	-	-			56	none	-	-	Average (of DGAC and PCC)	0
5+358	*28830*	*Total*	-		*1922*	-	-		*Traffic light*	*0*	-	*Average (of DGAC and PCC)*	*0*
5+358	28830	Automobiles	-		1122	-		56	Traffic light	0	-	Average (of DGAC and PCC)	0
5+358	28830	Medium trucks	-		685	-		56	Traffic light	0	-	Average (of DGAC and PCC)	0
5+358	28830	Heavy trucks	-		90	-		56	Traffic light	0	-	Average (of DGAC and PCC)	0
5+358	28830	Buses	-		13	-		56	Traffic light	0	-	Average (of DGAC and PCC)	0
5+358	28830	Motorcycles	-		12	-		56	Traffic light	0	-	Average (of DGAC and PCC)	0
5+358	28830	Auxiliary Vehicle	-	-	-			56	Traffic light	0	-	Average (of DGAC and PCC)	0
5+436	*28830*	*Total*	-		*1922*	-	-		*none*	-	-	*Average (of DGAC and PCC)*	*0*
5+436	28830	Automobiles	-		1122	-		56	none	-	-	Average (of DGAC and PCC)	0
5+436	28830	Medium trucks	-		685	-		56	none	-	-	Average (of DGAC and PCC)	0
5+436	28830	Heavy trucks	-		90	-		56	none	-	-	Average (of DGAC and PCC)	0
5+436	28830	Buses	-		13	-		56	none	-	-	Average (of DGAC and PCC)	0
5+436	28830	Motorcycles	-		12	-		56	none	-	-	Average (of DGAC and PCC)	0
5+436	28830	Auxiliary Vehicle	-	-	-			56	none	-	-	Average (of DGAC and PCC)	0
5+512	*28830*	*Total*	-		*1922*	-	-		*none*	-	-	*Average (of DGAC and PCC)*	*0*
5+512	28830	Automobiles	-		1122	-		56	none	-	-	Average (of DGAC and PCC)	0
5+512	28830	Medium trucks	-		685	-		56	none	-	-	Average (of DGAC and PCC)	0
5+512	28830	Heavy trucks	-		90	-		56	none	-	-	Average (of DGAC and PCC)	0
5+512	28830	Buses	-		13	-		56	none	-	-	Average (of DGAC and PCC)	0
5+512	28830	Motorcycles	-		12	-		56	none	-	-	Average (of DGAC and PCC)	0
5+512	28830	Auxiliary Vehicle	-	-	-			56	none	-	-	Average (of DGAC and PCC)	0
5+651	*28830*	*Total*	-		*1922*	-	-		*none*	-	-	*Average (of DGAC and PCC)*	*0*
5+651	28830	Automobiles	-		1122	-		56	none	-	-	Average (of DGAC and PCC)	0
5+651	28830	Medium trucks	-		685	-		56	none	-	-	Average (of DGAC and PCC)	0
5+651	28830	Heavy trucks	-		90	-		56	none	-	-	Average (of DGAC and PCC)	0
5+651	28830	Buses	-		13	-		56	none	-	-	Average (of DGAC and PCC)	0
5+651	28830	Motorcycles	-		12	-		56	none	-	-	Average (of DGAC and PCC)	0
5+651	28830	Auxiliary Vehicle	-	-	-			56	none	-	-	Average (of DGAC and PCC)	0
5+812	*32745*	*Total*	-		*2183*	-	-		*Traffic light*	*0*	-	*Average (of DGAC and PCC)*	*0*
5+812	32745	Automobiles	-		1274	-		56	Traffic light	0	-	Average (of DGAC and PCC)	0
5+812	32745	Medium trucks	-		778	-		56	Traffic light	0	-	Average (of DGAC and PCC)	0
5+812	32745	Heavy trucks	-		102	-		56	Traffic light	0	-	Average (of DGAC and PCC)	0
5+812	32745	Buses	-		15	-		56	Traffic light	0	-	Average (of DGAC and PCC)	0
5+812	32745	Motorcycles	-		14	-		56	Traffic light	0	-	Average (of DGAC and PCC)	0
5+812	32745	Auxiliary Vehicle	-	-	-			56	Traffic light	0	-	Average (of DGAC and PCC)	0
6+392	*32745*	*Total*	-		*2183*	-	-		*none*	-	-	*Average (of DGAC and PCC)*	*0*
6+392	32745	Automobiles	-		1274	-		56	none	-	-	Average (of DGAC and PCC)	0
6+392	32745	Medium trucks	-		778	-		56	none	-	-	Average (of DGAC and PCC)	0
6+392	32745	Heavy trucks	-		102	-		56	none	-	-	Average (of DGAC and PCC)	0
6+392	32745	Buses	-		15	-		56	none	-	-	Average (of DGAC and PCC)	0
6+392	32745	Motorcycles	-		14	-		56	none	-	-	Average (of DGAC and PCC)	0

6+392		32745	Auxiliary Vehicle	-	-	-		56	none	-	-	Average (of DGAC and PCC)	0
6+509		*44535*	*Total*	-		*2969*	-	-	*Traffic light*		*0*	- *Average (of DGAC and PCC)*	*0*
6+509		44535	Automobiles	-		1733	-		56	Traffic light		0	- Average (of DGAC and PCC)	0
6+509		44535	Medium trucks	-		1058	-		56	Traffic light		0	- Average (of DGAC and PCC)	0
6+509		44535	Heavy trucks	-		139	-		56	Traffic light		0	- Average (of DGAC and PCC)	0
6+509		44535	Buses	-		20	-		56	Traffic light		0	- Average (of DGAC and PCC)	0
6+509		44535	Motorcycles	-		19	-		56	Traffic light		0	- Average (of DGAC and PCC)	0
6+509		44535	Auxiliary Vehicle	-	-	-		56	Traffic light		0	- Average (of DGAC and PCC)	0
6+641		*44535*	*Total*	-		*2969*	-	-	*none*	-	-	*Average (of DGAC and PCC)*	*0*
6+641		44535	Automobiles	-		1733	-		56	none	-	-	Average (of DGAC and PCC)	0
6+641		44535	Medium trucks	-		1058	-		56	none	-	-	Average (of DGAC and PCC)	0
6+641		44535	Heavy trucks	-		139	-		56	none	-	-	Average (of DGAC and PCC)	0
6+641		44535	Buses	-		20	-		56	none	-	-	Average (of DGAC and PCC)	0
6+641		44535	Motorcycles	-		19	-		56	none	-	-	Average (of DGAC and PCC)	0
6+641		44535	Auxiliary Vehicle	-	-	-		56	none	-	-	Average (of DGAC and PCC)	0
7+097		*44535*	*Total*	-		*2969*	-	-	*none*	-	-	*Average (of DGAC and PCC)*	*0*
7+097		44535	Automobiles	-		1733	-		56	none	-	-	Average (of DGAC and PCC)	0
7+097		44535	Medium trucks	-		1058	-		56	none	-	-	Average (of DGAC and PCC)	0
7+097		44535	Heavy trucks	-		139	-		56	none	-	-	Average (of DGAC and PCC)	0
7+097		44535	Buses	-		20	-		56	none	-	-	Average (of DGAC and PCC)	0
7+097		44535	Motorcycles	-		19	-		56	none	-	-	Average (of DGAC and PCC)	0
7+097		44535	Auxiliary Vehicle	-	-	-		56	none	-	-	Average (of DGAC and PCC)	0
8+001		*36960*	*Total*	-		*2464*	-	-	*Traffic light*		*0*	- *Average (of DGAC and PCC)*	*0*
8+001		36960	Automobiles	-		1438	-		56	Traffic light		0	- Average (of DGAC and PCC)	0
8+001		36960	Medium trucks	-		878	-		56	Traffic light		0	- Average (of DGAC and PCC)	0
8+001		36960	Heavy trucks	-		115	-		56	Traffic light		0	- Average (of DGAC and PCC)	0
8+001		36960	Buses	-		17	-		56	Traffic light		0	- Average (of DGAC and PCC)	0
8+001		36960	Motorcycles	-		16	-		56	Traffic light		0	- Average (of DGAC and PCC)	0
8+001		36960	Auxiliary Vehicle	-	-	-		56	Traffic light		0	- Average (of DGAC and PCC)	0
8+681		*39615*	*Total*	-		*2641*	-	-	*Traffic light*		*0*	- *Average (of DGAC and PCC)*	*0*
8+681		39615	Automobiles	-		1541	-		56	Traffic light		0	- Average (of DGAC and PCC)	0
8+681		39615	Medium trucks	-		941	-		56	Traffic light		0	- Average (of DGAC and PCC)	0
8+681		39615	Heavy trucks	-		124	-		56	Traffic light		0	- Average (of DGAC and PCC)	0
8+681		39615	Buses	-		18	-		56	Traffic light		0	- Average (of DGAC and PCC)	0
8+681		39615	Motorcycles	-		17	-		56	Traffic light		0	- Average (of DGAC and PCC)	0
8+681		39615	Auxiliary Vehicle	-	-	-		56	Traffic light		0	- Average (of DGAC and PCC)	0
10+386		*35340*	*Total*	-		*2356*	-	-	*Traffic light*		*0*	- *Average (of DGAC and PCC)*	*0*
10+386		35340	Automobiles	-		1375	-		56	Traffic light		0	- Average (of DGAC and PCC)	0
10+386		35340	Medium trucks	-		840	-		56	Traffic light		0	- Average (of DGAC and PCC)	0
10+386		35340	Heavy trucks	-		110	-		56	Traffic light		0	- Average (of DGAC and PCC)	0
10+386		35340	Buses	-		16	-		56	Traffic light		0	- Average (of DGAC and PCC)	0
10+386		35340	Motorcycles	-		15	-		56	Traffic light		0	- Average (of DGAC and PCC)	0
10+386		35340	Auxiliary Vehicle	-	-	-		56	Traffic light		0	- Average (of DGAC and PCC)	0
11+398		*41970*	*Total*	-		*2798*	-	-	*Traffic light*		*0*	- *Average (of DGAC and PCC)*	*0*
11+398		41970	Automobiles	-		1633	-		56	Traffic light		0	- Average (of DGAC and PCC)	0
11+398		41970	Medium trucks	-		997	-		56	Traffic light		0	- Average (of DGAC and PCC)	0
11+398		41970	Heavy trucks	-		131	-		56	Traffic light		0	- Average (of DGAC and PCC)	0
11+398		41970	Buses	-		19	-		56	Traffic light		0	- Average (of DGAC and PCC)	0
11+398		41970	Motorcycles	-		18	-		56	Traffic light		0	- Average (of DGAC and PCC)	0
11+398		41970	Auxiliary Vehicle	-	-	-		56	Traffic light		0	- Average (of DGAC and PCC)	0
12+369		*48225*	*Total*	-		*3215*	-	-	*Traffic light*		*0*	- *Average (of DGAC and PCC)*	*0*
12+369		48225	Automobiles	-		1877	-		56	Traffic light		0	- Average (of DGAC and PCC)	0
12+369		48225	Medium trucks	-		1146	-		56	Traffic light		0	- Average (of DGAC and PCC)	0
12+369		48225	Heavy trucks	-		150	-		56	Traffic light		0	- Average (of DGAC and PCC)	0
12+369		48225	Buses	-		22	-		56	Traffic light		0	- Average (of DGAC and PCC)	0
12+369		48225	Motorcycles	-		20	-		56	Traffic light		0	- Average (of DGAC and PCC)	0
12+369		48225	Auxiliary Vehicle	-	-	-		56	Traffic light		0	- Average (of DGAC and PCC)	0
12+792	-								-	-	-	-	-
0+000		*48225*	*Total*	-		*3215*	-	-	*none*	-	-	*Average (of DGAC and PCC)*	*0*
0+000		48225	Automobiles	-		1877	-		56	none	-	-	Average (of DGAC and PCC)	0
0+000		48225	Medium trucks	-		1146	-		56	none	-	-	Average (of DGAC and PCC)	0

0+000	48225	Heavy trucks	-		150	-		56	none	-	-	Average (of DGAC and PCC)	0
0+000	48225	Buses	-		22	-		56	none	-	-	Average (of DGAC and PCC)	0
0+000	48225	Motorcycles	-		20	-		56	none	-	-	Average (of DGAC and PCC)	0
0+000	48225	Auxiliary Vehicle	-	-	-			56	none	-	-	Average (of DGAC and PCC)	0
Rosemead Blvd SB	Traffic direction:	In entry direction											
2+808	*48945*	*Total*	-		*3263*	-	-		*none*	-	-	*Average (of DGAC and PCC)*	*0*
2+808	48945	Automobiles	-		1904	-		64	none	-	-	Average (of DGAC and PCC)	0
2+808	48945	Medium trucks	-		1163	-		64	none	-	-	Average (of DGAC and PCC)	0
2+808	48945	Heavy trucks	-		153	-		64	none	-	-	Average (of DGAC and PCC)	0
2+808	48945	Buses	-		22	-		64	none	-	-	Average (of DGAC and PCC)	0
2+808	48945	Motorcycles	-		21	-		64	none	-	-	Average (of DGAC and PCC)	0
2+808	48945	Auxiliary Vehicle	-	-	-			64	none	-	-	Average (of DGAC and PCC)	0
3+287	*48945*	*Total*	-		*3263*	-	-		*Traffic light*	*0*	-	*Average (of DGAC and PCC)*	*0*
3+287	48945	Automobiles	-		1904	-		64	Traffic light	0	-	Average (of DGAC and PCC)	0
3+287	48945	Medium trucks	-		1163	-		64	Traffic light	0	-	Average (of DGAC and PCC)	0
3+287	48945	Heavy trucks	-		153	-		64	Traffic light	0	-	Average (of DGAC and PCC)	0
3+287	48945	Buses	-		22	-		64	Traffic light	0	-	Average (of DGAC and PCC)	0
3+287	48945	Motorcycles	-		21	-		64	Traffic light	0	-	Average (of DGAC and PCC)	0
3+287	48945	Auxiliary Vehicle	-	-	-			64	Traffic light	0	-	Average (of DGAC and PCC)	0
5+711	*57060*	*Total*	-		*3804*	-	-		*Traffic light*	*0*	-	*Average (of DGAC and PCC)*	*0*
5+711	57060	Automobiles	-		2220	-		64	Traffic light	0	-	Average (of DGAC and PCC)	0
5+711	57060	Medium trucks	-		1356	-		64	Traffic light	0	-	Average (of DGAC and PCC)	0
5+711	57060	Heavy trucks	-		178	-		64	Traffic light	0	-	Average (of DGAC and PCC)	0
5+711	57060	Buses	-		26	-		64	Traffic light	0	-	Average (of DGAC and PCC)	0
5+711	57060	Motorcycles	-		24	-		64	Traffic light	0	-	Average (of DGAC and PCC)	0
5+711	57060	Auxiliary Vehicle	-	-	-			64	Traffic light	0	-	Average (of DGAC and PCC)	0
6+547	*54375*	*Total*	-		*3625*	-	-		*Traffic light*	*0*	-	*Average (of DGAC and PCC)*	*0*
6+547	54375	Automobiles	-		2116	-		64	Traffic light	0	-	Average (of DGAC and PCC)	0
6+547	54375	Medium trucks	-		1292	-		64	Traffic light	0	-	Average (of DGAC and PCC)	0
6+547	54375	Heavy trucks	-		170	-		64	Traffic light	0	-	Average (of DGAC and PCC)	0
6+547	54375	Buses	-		24	-		64	Traffic light	0	-	Average (of DGAC and PCC)	0
6+547	54375	Motorcycles	-		23	-		64	Traffic light	0	-	Average (of DGAC and PCC)	0
6+547	54375	Auxiliary Vehicle	-	-	-			64	Traffic light	0	-	Average (of DGAC and PCC)	0
7+477	*75285*	*Total*	-		*5019*	-	-		*Traffic light*	*0*	-	*Average (of DGAC and PCC)*	*0*
7+477	75285	Automobiles	-		2930	-		64	Traffic light	0	-	Average (of DGAC and PCC)	0
7+477	75285	Medium trucks	-		1789	-		64	Traffic light	0	-	Average (of DGAC and PCC)	0
7+477	75285	Heavy trucks	-		235	-		64	Traffic light	0	-	Average (of DGAC and PCC)	0
7+477	75285	Buses	-		34	-		64	Traffic light	0	-	Average (of DGAC and PCC)	0
7+477	75285	Motorcycles	-		31	-		64	Traffic light	0	-	Average (of DGAC and PCC)	0
7+477	75285	Auxiliary Vehicle	-	-	-			64	Traffic light	0	-	Average (of DGAC and PCC)	0
7+811	*75285*	*Total*	-		*5019*	-	-		*Traffic light*	*0*	-	*Average (of DGAC and PCC)*	*0*
7+811	75285	Automobiles	-		2930	-		64	Traffic light	0	-	Average (of DGAC and PCC)	0
7+811	75285	Medium trucks	-		1789	-		64	Traffic light	0	-	Average (of DGAC and PCC)	0
7+811	75285	Heavy trucks	-		235	-		64	Traffic light	0	-	Average (of DGAC and PCC)	0
7+811	75285	Buses	-		34	-		64	Traffic light	0	-	Average (of DGAC and PCC)	0
7+811	75285	Motorcycles	-		31	-		64	Traffic light	0	-	Average (of DGAC and PCC)	0
7+811	75285	Auxiliary Vehicle	-	-	-			64	Traffic light	0	-	Average (of DGAC and PCC)	0
7+919	*75285*	*Total*	-		*5019*	-	-		*Traffic light*	*0*	-	*Average (of DGAC and PCC)*	*0*
7+919	75285	Automobiles	-		2930	-		72	Traffic light	0	-	Average (of DGAC and PCC)	0
7+919	75285	Medium trucks	-		1789	-		72	Traffic light	0	-	Average (of DGAC and PCC)	0
7+919	75285	Heavy trucks	-		235	-		72	Traffic light	0	-	Average (of DGAC and PCC)	0
7+919	75285	Buses	-		34	-		72	Traffic light	0	-	Average (of DGAC and PCC)	0
7+919	75285	Motorcycles	-		31	-		72	Traffic light	0	-	Average (of DGAC and PCC)	0
7+919	75285	Auxiliary Vehicle	-	-	-			72	Traffic light	0	-	Average (of DGAC and PCC)	0
8+050	*81855*	*Total*	-		*5457*	-	-		*none*	-	-	*Average (of DGAC and PCC)*	*0*
8+050	81855	Automobiles	-		3186	-		72	none	-	-	Average (of DGAC and PCC)	0
8+050	81855	Medium trucks	-		1946	-		72	none	-	-	Average (of DGAC and PCC)	0
8+050	81855	Heavy trucks	-		255	-		72	none	-	-	Average (of DGAC and PCC)	0
8+050	81855	Buses	-		36	-		72	none	-	-	Average (of DGAC and PCC)	0
8+050	81855	Motorcycles	-		34	-		72	none	-	-	Average (of DGAC and PCC)	0
8+050	81855	Auxiliary Vehicle	-	-	-			72	none	-	-	Average (of DGAC and PCC)	0

8+350	*75975*	*Total*	-	*5065*	-	-	*Traffic light*	*0*	-	*Average (of DGAC and PCC)*	*0*
8+350	75975	Automobiles	-	2957	-	72	Traffic light	0	-	Average (of DGAC and PCC)	0
8+350	75975	Medium trucks	-	1805	-	72	Traffic light	0	-	Average (of DGAC and PCC)	0
8+350	75975	Heavy trucks	-	237	-	72	Traffic light	0	-	Average (of DGAC and PCC)	0
8+350	75975	Buses	-	34	-	72	Traffic light	0	-	Average (of DGAC and PCC)	0
8+350	75975	Motorcycles	-	32	-	72	Traffic light	0	-	Average (of DGAC and PCC)	0
8+350	75975	Auxiliary Vehicle	-	-	-	72	Traffic light	0	-	Average (of DGAC and PCC)	0
8+819	*72540*	*Total*	-	*4836*	-	-	*Traffic light*	*0*	-	*Average (of DGAC and PCC)*	*0*
8+819	72540	Automobiles	-	2824	-	72	Traffic light	0	-	Average (of DGAC and PCC)	0
8+819	72540	Medium trucks	-	1724	-	72	Traffic light	0	-	Average (of DGAC and PCC)	0
8+819	72540	Heavy trucks	-	226	-	72	Traffic light	0	-	Average (of DGAC and PCC)	0
8+819	72540	Buses	-	32	-	72	Traffic light	0	-	Average (of DGAC and PCC)	0
8+819	72540	Motorcycles	-	30	-	72	Traffic light	0	-	Average (of DGAC and PCC)	0
8+819	72540	Auxiliary Vehicle	-	-	-	72	Traffic light	0	-	Average (of DGAC and PCC)	0
9+167	*72540*	*Total*	-	*4836*	-	-	*Traffic light*	*0*	-	*Average (of DGAC and PCC)*	*0*
9+167	72540	Automobiles	-	2824	-	72	Traffic light	0	-	Average (of DGAC and PCC)	0
9+167	72540	Medium trucks	-	1724	-	72	Traffic light	0	-	Average (of DGAC and PCC)	0
9+167	72540	Heavy trucks	-	226	-	72	Traffic light	0	-	Average (of DGAC and PCC)	0
9+167	72540	Buses	-	32	-	72	Traffic light	0	-	Average (of DGAC and PCC)	0
9+167	72540	Motorcycles	-	30	-	72	Traffic light	0	-	Average (of DGAC and PCC)	0
9+167	72540	Auxiliary Vehicle	-	-	-	72	Traffic light	0	-	Average (of DGAC and PCC)	0
9+309	*61635*	*Total*	-	*4109*	-	-	*Traffic light*	*0*	-	*Average (of DGAC and PCC)*	*0*
9+309	61635	Automobiles	-	2398	-	64	Traffic light	0	-	Average (of DGAC and PCC)	0
9+309	61635	Medium trucks	-	1465	-	64	Traffic light	0	-	Average (of DGAC and PCC)	0
9+309	61635	Heavy trucks	-	192	-	64	Traffic light	0	-	Average (of DGAC and PCC)	0
9+309	61635	Buses	-	28	-	64	Traffic light	0	-	Average (of DGAC and PCC)	0
9+309	61635	Motorcycles	-	26	-	64	Traffic light	0	-	Average (of DGAC and PCC)	0
9+309	61635	Auxiliary Vehicle	-	-	-	64	Traffic light	0	-	Average (of DGAC and PCC)	0
9+623	*61635*	*Total*	-	*4109*	-	-	*Traffic light*	*0*	-	*Average (of DGAC and PCC)*	*0*
9+623	61635	Automobiles	-	2398	-	64	Traffic light	0	-	Average (of DGAC and PCC)	0
9+623	61635	Medium trucks	-	1465	-	64	Traffic light	0	-	Average (of DGAC and PCC)	0
9+623	61635	Heavy trucks	-	192	-	64	Traffic light	0	-	Average (of DGAC and PCC)	0
9+623	61635	Buses	-	28	-	64	Traffic light	0	-	Average (of DGAC and PCC)	0
9+623	61635	Motorcycles	-	26	-	64	Traffic light	0	-	Average (of DGAC and PCC)	0
9+623	61635	Auxiliary Vehicle	-	-	-	64	Traffic light	0	-	Average (of DGAC and PCC)	0
9+692	*61635*	*Total*	-	*4109*	-	-	*Traffic light*	*0*	-	*Average (of DGAC and PCC)*	*0*
9+692	61635	Automobiles	-	2398	-	64	Traffic light	0	-	Average (of DGAC and PCC)	0
9+692	61635	Medium trucks	-	1465	-	64	Traffic light	0	-	Average (of DGAC and PCC)	0
9+692	61635	Heavy trucks	-	192	-	64	Traffic light	0	-	Average (of DGAC and PCC)	0
9+692	61635	Buses	-	28	-	64	Traffic light	0	-	Average (of DGAC and PCC)	0
9+692	61635	Motorcycles	-	26	-	64	Traffic light	0	-	Average (of DGAC and PCC)	0
9+692	61635	Auxiliary Vehicle	-	-	-	64	Traffic light	0	-	Average (of DGAC and PCC)	0
10+750	*62895*	*Total*	-	*4193*	-	-	*Traffic light*	*0*	-	*Average (of DGAC and PCC)*	*0*
10+750	62895	Automobiles	-	2448	-	64	Traffic light	0	-	Average (of DGAC and PCC)	0
10+750	62895	Medium trucks	-	1495	-	64	Traffic light	0	-	Average (of DGAC and PCC)	0
10+750	62895	Heavy trucks	-	196	-	64	Traffic light	0	-	Average (of DGAC and PCC)	0
10+750	62895	Buses	-	28	-	64	Traffic light	0	-	Average (of DGAC and PCC)	0
10+750	62895	Motorcycles	-	26	-	64	Traffic light	0	-	Average (of DGAC and PCC)	0
10+750	62895	Auxiliary Vehicle	-	-	-	64	Traffic light	0	-	Average (of DGAC and PCC)	0
11+048	-						-	-	-	-	-
0+000	*62895*	*Total*	-	*4193*	-	-	*Traffic light*	*0*	-	*Average (of DGAC and PCC)*	*0*
0+000	62895	Automobiles	-	2448	-	64	Traffic light	0	-	Average (of DGAC and PCC)	0
0+000	62895	Medium trucks	-	1495	-	64	Traffic light	0	-	Average (of DGAC and PCC)	0
0+000	62895	Heavy trucks	-	196	-	64	Traffic light	0	-	Average (of DGAC and PCC)	0
0+000	62895	Buses	-	28	-	64	Traffic light	0	-	Average (of DGAC and PCC)	0
0+000	62895	Motorcycles	-	26	-	64	Traffic light	0	-	Average (of DGAC and PCC)	0
0+000	62895	Auxiliary Vehicle	-	-	-	64	Traffic light	0	-	Average (of DGAC and PCC)	0
Rosemead Blvd NB	Traffic direction:	In entry direction									
2+808	*62430*	*Total*	-	*4162*	-	-	*Traffic light*	*0*	-	*Average (of DGAC and PCC)*	*0*
2+808	62430	Automobiles	-	2434	-	64	Traffic light	0	-	Average (of DGAC and PCC)	0
2+808	62430	Medium trucks	-	1480	-	64	Traffic light	0	-	Average (of DGAC and PCC)	0

2+808	62430	Heavy trucks	-	194	-		64	Traffic light	0	-	Average (of DGAC and PCC)	0
2+808	62430	Buses	-	28	-		64	Traffic light	0	-	Average (of DGAC and PCC)	0
2+808	62430	Motorcycles	-	26	-		64	Traffic light	0	-	Average (of DGAC and PCC)	0
2+808	62430	Auxiliary Vehicle	-	-	-	-	64	Traffic light	0	-	Average (of DGAC and PCC)	0
4+148	*62280*	*Total*	-	*4152*	-	-		*Traffic light*	*0*	-	*Average (of DGAC and PCC)*	*0*
4+148	62280	Automobiles	-	2424	-		64	Traffic light	0	-	Average (of DGAC and PCC)	0
4+148	62280	Medium trucks	-	1480	-		64	Traffic light	0	-	Average (of DGAC and PCC)	0
4+148	62280	Heavy trucks	-	194	-		64	Traffic light	0	-	Average (of DGAC and PCC)	0
4+148	62280	Buses	-	28	-		64	Traffic light	0	-	Average (of DGAC and PCC)	0
4+148	62280	Motorcycles	-	26	-		64	Traffic light	0	-	Average (of DGAC and PCC)	0
4+148	62280	Auxiliary Vehicle	-	-	-	-	64	Traffic light	0	-	Average (of DGAC and PCC)	0
4+544	*71985*	*Total*	-	*4799*	-	-		*Traffic light*	*0*	-	*Average (of DGAC and PCC)*	*0*
4+544	71985	Automobiles	-	2802	-		72	Traffic light	0	-	Average (of DGAC and PCC)	0
4+544	71985	Medium trucks	-	1711	-		72	Traffic light	0	-	Average (of DGAC and PCC)	0
4+544	71985	Heavy trucks	-	224	-		72	Traffic light	0	-	Average (of DGAC and PCC)	0
4+544	71985	Buses	-	32	-		72	Traffic light	0	-	Average (of DGAC and PCC)	0
4+544	71985	Motorcycles	-	30	-		72	Traffic light	0	-	Average (of DGAC and PCC)	0
4+544	71985	Auxiliary Vehicle	-	-	-	-	72	Traffic light	0	-	Average (of DGAC and PCC)	0
4+663	*71985*	*Total*	-	*4799*	-	-		*Traffic light*	*0*	-	*Average (of DGAC and PCC)*	*0*
4+663	71985	Automobiles	-	2802	-		72	Traffic light	0	-	Average (of DGAC and PCC)	0
4+663	71985	Medium trucks	-	1711	-		72	Traffic light	0	-	Average (of DGAC and PCC)	0
4+663	71985	Heavy trucks	-	224	-		72	Traffic light	0	-	Average (of DGAC and PCC)	0
4+663	71985	Buses	-	32	-		72	Traffic light	0	-	Average (of DGAC and PCC)	0
4+663	71985	Motorcycles	-	30	-		72	Traffic light	0	-	Average (of DGAC and PCC)	0
4+663	71985	Auxiliary Vehicle	-	-	-	-	72	Traffic light	0	-	Average (of DGAC and PCC)	0
5+034	*69180*	*Total*	-	*4612*	-	-		*Traffic light*	*0*	-	*Average (of DGAC and PCC)*	*0*
5+034	69180	Automobiles	-	2692	-		72	Traffic light	0	-	Average (of DGAC and PCC)	0
5+034	69180	Medium trucks	-	1644	-		72	Traffic light	0	-	Average (of DGAC and PCC)	0
5+034	69180	Heavy trucks	-	216	-		72	Traffic light	0	-	Average (of DGAC and PCC)	0
5+034	69180	Buses	-	31	-		72	Traffic light	0	-	Average (of DGAC and PCC)	0
5+034	69180	Motorcycles	-	29	-		72	Traffic light	0	-	Average (of DGAC and PCC)	0
5+034	69180	Auxiliary Vehicle	-	-	-	-	72	Traffic light	0	-	Average (of DGAC and PCC)	0
5+530	*81840*	*Total*	-	*5456*	-	-		*Traffic light*	*0*	-	*Average (of DGAC and PCC)*	*0*
5+530	81840	Automobiles	-	3186	-		72	Traffic light	0	-	Average (of DGAC and PCC)	0
5+530	81840	Medium trucks	-	1945	-		72	Traffic light	0	-	Average (of DGAC and PCC)	0
5+530	81840	Heavy trucks	-	255	-		72	Traffic light	0	-	Average (of DGAC and PCC)	0
5+530	81840	Buses	-	36	-		72	Traffic light	0	-	Average (of DGAC and PCC)	0
5+530	81840	Motorcycles	-	34	-		72	Traffic light	0	-	Average (of DGAC and PCC)	0
5+530	81840	Auxiliary Vehicle	-	-	-	-	72	Traffic light	0	-	Average (of DGAC and PCC)	0
5+811	*80745*	*Total*	-	*5383*	-	-		*none*	-	-	*Average (of DGAC and PCC)*	*0*
5+811	80745	Automobiles	-	3143	-		72	none	-	-	Average (of DGAC and PCC)	0
5+811	80745	Medium trucks	-	1919	-		72	none	-	-	Average (of DGAC and PCC)	0
5+811	80745	Heavy trucks	-	251	-		72	none	-	-	Average (of DGAC and PCC)	0
5+811	80745	Buses	-	36	-		72	none	-	-	Average (of DGAC and PCC)	0
5+811	80745	Motorcycles	-	34	-		72	none	-	-	Average (of DGAC and PCC)	0
5+811	80745	Auxiliary Vehicle	-	-	-	-	72	none	-	-	Average (of DGAC and PCC)	0
5+947	*80730*	*Total*	-	*5382*	-	-		*none*	-	-	*Average (of DGAC and PCC)*	*0*
5+947	80730	Automobiles	-	3143	-		72	none	-	-	Average (of DGAC and PCC)	0
5+947	80730	Medium trucks	-	1919	-		72	none	-	-	Average (of DGAC and PCC)	0
5+947	80730	Heavy trucks	-	251	-		72	none	-	-	Average (of DGAC and PCC)	0
5+947	80730	Buses	-	36	-		72	none	-	-	Average (of DGAC and PCC)	0
5+947	80730	Motorcycles	-	33	-		72	none	-	-	Average (of DGAC and PCC)	0
5+947	80730	Auxiliary Vehicle	-	-	-	-	72	none	-	-	Average (of DGAC and PCC)	0
6+119	*80745*	*Total*	-	*5383*	-	-		*none*	-	-	*Average (of DGAC and PCC)*	*0*
6+119	80745	Automobiles	-	3143	-		72	none	-	-	Average (of DGAC and PCC)	0
6+119	80745	Medium trucks	-	1919	-		72	none	-	-	Average (of DGAC and PCC)	0
6+119	80745	Heavy trucks	-	251	-		72	none	-	-	Average (of DGAC and PCC)	0
6+119	80745	Buses	-	36	-		72	none	-	-	Average (of DGAC and PCC)	0
6+119	80745	Motorcycles	-	34	-		72	none	-	-	Average (of DGAC and PCC)	0
6+119	80745	Auxiliary Vehicle	-	-	-	-	72	none	-	-	Average (of DGAC and PCC)	0
6+377	*66510*	*Total*	-	*4434*	-	-		*Traffic light*	*0*	-	*Average (of DGAC and PCC)*	*0*

6+377	66510	Automobiles	-	2588	-	64	Traffic light	0	-	Average (of DGAC and PCC)	0
6+377	66510	Medium trucks	-	1581	-	64	Traffic light	0	-	Average (of DGAC and PCC)	0
6+377	66510	Heavy trucks	-	207	-	64	Traffic light	0	-	Average (of DGAC and PCC)	0
6+377	66510	Buses	-	30	-	64	Traffic light	0	-	Average (of DGAC and PCC)	0
6+377	66510	Motorcycles	-	28	-	64	Traffic light	0	-	Average (of DGAC and PCC)	0
6+377	66510	Auxiliary Vehicle	-	-	-	64	Traffic light	0	-	Average (of DGAC and PCC)	0
7+281	*51030*	*Total*	-	*3402*	-	-	*Traffic light*	*0*	-	*Average (of DGAC and PCC)*	*0*
7+281	51030	Automobiles	-	1986	-	64	Traffic light	0	-	Average (of DGAC and PCC)	0
7+281	51030	Medium trucks	-	1213	-	64	Traffic light	0	-	Average (of DGAC and PCC)	0
7+281	51030	Heavy trucks	-	159	-	64	Traffic light	0	-	Average (of DGAC and PCC)	0
7+281	51030	Buses	-	23	-	64	Traffic light	0	-	Average (of DGAC and PCC)	0
7+281	51030	Motorcycles	-	21	-	64	Traffic light	0	-	Average (of DGAC and PCC)	0
7+281	51030	Auxiliary Vehicle	-	-	-	64	Traffic light	0	-	Average (of DGAC and PCC)	0
8+146	*51390*	*Total*	-	*3426*	-	-	*Traffic light*	*0*	-	*Average (of DGAC and PCC)*	*0*
8+146	51390	Automobiles	-	2000	-	64	Traffic light	0	-	Average (of DGAC and PCC)	0
8+146	51390	Medium trucks	-	1221	-	64	Traffic light	0	-	Average (of DGAC and PCC)	0
8+146	51390	Heavy trucks	-	160	-	64	Traffic light	0	-	Average (of DGAC and PCC)	0
8+146	51390	Buses	-	23	-	64	Traffic light	0	-	Average (of DGAC and PCC)	0
8+146	51390	Motorcycles	-	22	-	64	Traffic light	0	-	Average (of DGAC and PCC)	0
8+146	51390	Auxiliary Vehicle	-	-	-	64	Traffic light	0	-	Average (of DGAC and PCC)	0
10+565	*48540*	*Total*	-	*3236*	-	-	*Traffic light*	*0*	-	*Average (of DGAC and PCC)*	*0*
10+565	48540	Automobiles	-	1889	-	64	Traffic light	0	-	Average (of DGAC and PCC)	0
10+565	48540	Medium trucks	-	1154	-	64	Traffic light	0	-	Average (of DGAC and PCC)	0
10+565	48540	Heavy trucks	-	151	-	64	Traffic light	0	-	Average (of DGAC and PCC)	0
10+565	48540	Buses	-	22	-	64	Traffic light	0	-	Average (of DGAC and PCC)	0
10+565	48540	Motorcycles	-	20	-	64	Traffic light	0	-	Average (of DGAC and PCC)	0
10+565	48540	Auxiliary Vehicle	-	-	-	64	Traffic light	0	-	Average (of DGAC and PCC)	0
11+040	-						-	-	-	-	-
0+000	*48540*	*Total*	-	*3236*	-	-	*Traffic light*	*0*	-	*Average (of DGAC and PCC)*	*0*
0+000	48540	Automobiles	-	1889	-	64	Traffic light	0	-	Average (of DGAC and PCC)	0
0+000	48540	Medium trucks	-	1154	-	64	Traffic light	0	-	Average (of DGAC and PCC)	0
0+000	48540	Heavy trucks	-	151	-	64	Traffic light	0	-	Average (of DGAC and PCC)	0
0+000	48540	Buses	-	22	-	64	Traffic light	0	-	Average (of DGAC and PCC)	0
0+000	48540	Motorcycles	-	20	-	64	Traffic light	0	-	Average (of DGAC and PCC)	0
0+000	48540	Auxiliary Vehicle	-	-	-	64	Traffic light	0	-	Average (of DGAC and PCC)	0
Temple City Blvd SB	Traffic direction:	In entry direction									
2+808	*34875*	*Total*	-	*2325*	-	-	*none*	-	-	*Average (of DGAC and PCC)*	*0*
2+808	34875	Automobiles	-	1357	-	64	none	-	-	Average (of DGAC and PCC)	0
2+808	34875	Medium trucks	-	828	-	64	none	-	-	Average (of DGAC and PCC)	0
2+808	34875	Heavy trucks	-	109	-	64	none	-	-	Average (of DGAC and PCC)	0
2+808	34875	Buses	-	16	-	64	none	-	-	Average (of DGAC and PCC)	0
2+808	34875	Motorcycles	-	15	-	64	none	-	-	Average (of DGAC and PCC)	0
2+808	34875	Auxiliary Vehicle	-	-	-	64	none	-	-	Average (of DGAC and PCC)	0
3+362	*34875*	*Total*	-	*2325*	-	-	*Traffic light*	*0*	-	*Average (of DGAC and PCC)*	*0*
3+362	34875	Automobiles	-	1357	-	64	Traffic light	0	-	Average (of DGAC and PCC)	0
3+362	34875	Medium trucks	-	828	-	64	Traffic light	0	-	Average (of DGAC and PCC)	0
3+362	34875	Heavy trucks	-	109	-	64	Traffic light	0	-	Average (of DGAC and PCC)	0
3+362	34875	Buses	-	16	-	64	Traffic light	0	-	Average (of DGAC and PCC)	0
3+362	34875	Motorcycles	-	15	-	64	Traffic light	0	-	Average (of DGAC and PCC)	0
3+362	34875	Auxiliary Vehicle	-	-	-	64	Traffic light	0	-	Average (of DGAC and PCC)	0
3+722	*34875*	*Total*	-	*2325*	-	-	*none*	-	-	*Average (of DGAC and PCC)*	*0*
3+722	34875	Automobiles	-	1357	-	64	none	-	-	Average (of DGAC and PCC)	0
3+722	34875	Medium trucks	-	828	-	64	none	-	-	Average (of DGAC and PCC)	0
3+722	34875	Heavy trucks	-	109	-	64	none	-	-	Average (of DGAC and PCC)	0
3+722	34875	Buses	-	16	-	64	none	-	-	Average (of DGAC and PCC)	0
3+722	34875	Motorcycles	-	15	-	64	none	-	-	Average (of DGAC and PCC)	0
3+722	34875	Auxiliary Vehicle	-	-	-	64	none	-	-	Average (of DGAC and PCC)	0
4+536	*27060*	*Total*	-	*1804*	-	-	*Traffic light*	*0*	-	*Average (of DGAC and PCC)*	*0*
4+536	27060	Automobiles	-	1052	-	64	Traffic light	0	-	Average (of DGAC and PCC)	0
4+536	27060	Medium trucks	-	643	-	64	Traffic light	0	-	Average (of DGAC and PCC)	0
4+536	27060	Heavy trucks	-	85	-	64	Traffic light	0	-	Average (of DGAC and PCC)	0

4+536		27060	Buses	-		12	-		64	Traffic light	0	-	Average (of DGAC and PCC)	0
4+536		27060	Motorcycles	-		12	-		64	Traffic light	0	-	Average (of DGAC and PCC)	0
4+536		27060	Auxiliary Vehicle	-	-	-			64	Traffic light	0	-	Average (of DGAC and PCC)	0
4+670		*27060*	*Total*	-		*1804*	-	-		*none*	-	-	*Average (of DGAC and PCC)*	*0*
4+670		27060	Automobiles	-		1052	-		64	none	-	-	Average (of DGAC and PCC)	0
4+670		27060	Medium trucks	-		643	-		64	none	-	-	Average (of DGAC and PCC)	0
4+670		27060	Heavy trucks	-		85	-		64	none	-	-	Average (of DGAC and PCC)	0
4+670		27060	Buses	-		12	-		64	none	-	-	Average (of DGAC and PCC)	0
4+670		27060	Motorcycles	-		12	-		64	none	-	-	Average (of DGAC and PCC)	0
4+670		27060	Auxiliary Vehicle	-	-	-			64	none	-	-	Average (of DGAC and PCC)	0
5+426		*36945*	*Total*	-		*2463*	-	-		*Traffic light*	*0*	-	*Average (of DGAC and PCC)*	*0*
5+426		36945	Automobiles	-		1437	-		64	Traffic light	0	-	Average (of DGAC and PCC)	0
5+426		36945	Medium trucks	-		878	-		64	Traffic light	0	-	Average (of DGAC and PCC)	0
5+426		36945	Heavy trucks	-		115	-		64	Traffic light	0	-	Average (of DGAC and PCC)	0
5+426		36945	Buses	-		17	-		64	Traffic light	0	-	Average (of DGAC and PCC)	0
5+426		36945	Motorcycles	-		16	-		64	Traffic light	0	-	Average (of DGAC and PCC)	0
5+426		36945	Auxiliary Vehicle	-	-	-			64	Traffic light	0	-	Average (of DGAC and PCC)	0
5+698	-									-	-	-	-	-
0+000		*36660*	*Total*	-		*2444*	-	-		*none*	-	-	*Average (of DGAC and PCC)*	*0*
0+000		36660	Automobiles	-		1426	-		64	none	-	-	Average (of DGAC and PCC)	0
0+000		36660	Medium trucks	-		871	-		64	none	-	-	Average (of DGAC and PCC)	0
0+000		36660	Heavy trucks	-		114	-		64	none	-	-	Average (of DGAC and PCC)	0
0+000		36660	Buses	-		17	-		64	none	-	-	Average (of DGAC and PCC)	0
0+000		36660	Motorcycles	-		16	-		64	none	-	-	Average (of DGAC and PCC)	0
0+000		36660	Auxiliary Vehicle	-	-	-			64	none	-	-	Average (of DGAC and PCC)	0
Temple City Blvd NB		Traffic direction:	In entry direction											
2+808		*36960*	*Total*	-		*2464*	-	-		*none*	-	-	*Average (of DGAC and PCC)*	*0*
2+808		36960	Automobiles	-		1438	-		40	none	-	-	Average (of DGAC and PCC)	0
2+808		36960	Medium trucks	-		878	-		40	none	-	-	Average (of DGAC and PCC)	0
2+808		36960	Heavy trucks	-		115	-		40	none	-	-	Average (of DGAC and PCC)	0
2+808		36960	Buses	-		17	-		40	none	-	-	Average (of DGAC and PCC)	0
2+808		36960	Motorcycles	-		16	-		40	none	-	-	Average (of DGAC and PCC)	0
2+808		36960	Auxiliary Vehicle	-	-	-			40	none	-	-	Average (of DGAC and PCC)	0
3+073		*35595*	*Total*	-		*2373*	-	-		*none*	-	-	*Average (of DGAC and PCC)*	*0*
3+073		35595	Automobiles	-		1385	-		40	none	-	-	Average (of DGAC and PCC)	0
3+073		35595	Medium trucks	-		846	-		40	none	-	-	Average (of DGAC and PCC)	0
3+073		35595	Heavy trucks	-		111	-		40	none	-	-	Average (of DGAC and PCC)	0
3+073		35595	Buses	-		16	-		40	none	-	-	Average (of DGAC and PCC)	0
3+073		35595	Motorcycles	-		15	-		40	none	-	-	Average (of DGAC and PCC)	0
3+073		35595	Auxiliary Vehicle	-	-	-			40	none	-	-	Average (of DGAC and PCC)	0
3+826		*35595*	*Total*	-		*2373*	-	-		*none*	-	-	*Average (of DGAC and PCC)*	*0*
3+826		35595	Automobiles	-		1385	-		40	none	-	-	Average (of DGAC and PCC)	0
3+826		35595	Medium trucks	-		846	-		40	none	-	-	Average (of DGAC and PCC)	0
3+826		35595	Heavy trucks	-		111	-		40	none	-	-	Average (of DGAC and PCC)	0
3+826		35595	Buses	-		16	-		40	none	-	-	Average (of DGAC and PCC)	0
3+826		35595	Motorcycles	-		15	-		40	none	-	-	Average (of DGAC and PCC)	0
3+826		35595	Auxiliary Vehicle	-	-	-			40	none	-	-	Average (of DGAC and PCC)	0
3+962		*34305*	*Total*	-		*2287*	-	-		*Traffic light*	*0*	-	*Average (of DGAC and PCC)*	*0*
3+962		34305	Automobiles	-		1334	-		64	Traffic light	0	-	Average (of DGAC and PCC)	0
3+962		34305	Medium trucks	-		815	-		64	Traffic light	0	-	Average (of DGAC and PCC)	0
3+962		34305	Heavy trucks	-		107	-		64	Traffic light	0	-	Average (of DGAC and PCC)	0
3+962		34305	Buses	-		16	-		64	Traffic light	0	-	Average (of DGAC and PCC)	0
3+962		34305	Motorcycles	-		15	-		64	Traffic light	0	-	Average (of DGAC and PCC)	0
3+962		34305	Auxiliary Vehicle	-	-	-			64	Traffic light	0	-	Average (of DGAC and PCC)	0
4+780		*34305*	*Total*	-		*2287*	-	-		*none*	-	-	*Average (of DGAC and PCC)*	*0*
4+780		34305	Automobiles	-		1334	-		64	none	-	-	Average (of DGAC and PCC)	0
4+780		34305	Medium trucks	-		815	-		64	none	-	-	Average (of DGAC and PCC)	0
4+780		34305	Heavy trucks	-		107	-		64	none	-	-	Average (of DGAC and PCC)	0
4+780		34305	Buses	-		16	-		64	none	-	-	Average (of DGAC and PCC)	0
4+780		34305	Motorcycles	-		15	-		64	none	-	-	Average (of DGAC and PCC)	0
4+780		34305	Auxiliary Vehicle	-	-	-			64	none	-	-	Average (of DGAC and PCC)	0

5+141	*34440*	*Total*	-	*2296*	-	-	*Traffic light*	*0*	-	*Average (of DGAC and PCC)*		*0*
5+141	34440	Automobiles	-	1340	-		64 Traffic light	0	-	Average (of DGAC and PCC)		0
5+141	34440	Medium trucks	-	818	-		64 Traffic light	0	-	Average (of DGAC and PCC)		0
5+141	34440	Heavy trucks	-	107	-		64 Traffic light	0	-	Average (of DGAC and PCC)		0
5+141	34440	Buses	-	16	-		64 Traffic light	0	-	Average (of DGAC and PCC)		0
5+141	34440	Motorcycles	-	15	-		64 Traffic light	0	-	Average (of DGAC and PCC)		0
5+141	34440	Auxiliary Vehicle	-	-	-		64 Traffic light	0	-	Average (of DGAC and PCC)		0
5+689	-						-	-	-	-	-	
0+000	*34440*	*Total*	-	*2296*	-	-	*none*	-	-	*Average (of DGAC and PCC)*		*0*
0+000	34440	Automobiles	-	1340	-		64 none	-	-	Average (of DGAC and PCC)		0
0+000	34440	Medium trucks	-	818	-		64 none	-	-	Average (of DGAC and PCC)		0
0+000	34440	Heavy trucks	-	107	-		64 none	-	-	Average (of DGAC and PCC)		0
0+000	34440	Buses	-	16	-		64 none	-	-	Average (of DGAC and PCC)		0
0+000	34440	Motorcycles	-	15	-		64 none	-	-	Average (of DGAC and PCC)		0
0+000	34440	Auxiliary Vehicle	-	-	-		64 none	-	-	Average (of DGAC and PCC)		0
Chico Ave SB	Traffic direction:	In entry direction										
2+808	*7890*	*Total*	-	*526*	-	-	*Traffic light*	*0*	-	*Average (of DGAC and PCC)*		*0*
2+808	7890	Automobiles	-	306	-		40 Traffic light	0	-	Average (of DGAC and PCC)		0
2+808	7890	Medium trucks	-	187	-		40 Traffic light	0	-	Average (of DGAC and PCC)		0
2+808	7890	Heavy trucks	-	25	-		40 Traffic light	0	-	Average (of DGAC and PCC)		0
2+808	7890	Buses	-	4	-		40 Traffic light	0	-	Average (of DGAC and PCC)		0
2+808	7890	Motorcycles	-	4	-		40 Traffic light	0	-	Average (of DGAC and PCC)		0
2+808	7890	Auxiliary Vehicle	-	-	-		40 Traffic light	0	-	Average (of DGAC and PCC)		0
3+422	-						-	-	-	-	-	
0+000	*7890*	*Total*	-	*526*	-	-	*none*	-	-	*Average (of DGAC and PCC)*		*0*
0+000	7890	Automobiles	-	306	-		40 none	-	-	Average (of DGAC and PCC)		0
0+000	7890	Medium trucks	-	187	-		40 none	-	-	Average (of DGAC and PCC)		0
0+000	7890	Heavy trucks	-	25	-		40 none	-	-	Average (of DGAC and PCC)		0
0+000	7890	Buses	-	4	-		40 none	-	-	Average (of DGAC and PCC)		0
0+000	7890	Motorcycles	-	4	-		40 none	-	-	Average (of DGAC and PCC)		0
0+000	7890	Auxiliary Vehicle	-	-	-		40 none	-	-	Average (of DGAC and PCC)		0
Merced Ave NB	Traffic direction:	In entry direction										
2+808	*450*	*Total*	-	*30*	-	-	*Traffic light*	*0*	-	*Average (of DGAC and PCC)*		*0*
2+808	450	Automobiles	-	16	-		56 Traffic light	0	-	Average (of DGAC and PCC)		0
2+808	450	Medium trucks	-	10	-		56 Traffic light	0	-	Average (of DGAC and PCC)		0
2+808	450	Heavy trucks	-	2	-		56 Traffic light	0	-	Average (of DGAC and PCC)		0
2+808	450	Buses	-	1	-		56 Traffic light	0	-	Average (of DGAC and PCC)		0
2+808	450	Motorcycles	-	1	-		56 Traffic light	0	-	Average (of DGAC and PCC)		0
2+808	450	Auxiliary Vehicle	-	-	-		56 Traffic light	0	-	Average (of DGAC and PCC)		0
3+415	-						-	-	-	-	-	
0+000	*450*	*Total*	-	*30*	-	-	*Traffic light*	*0*	-	*Average (of DGAC and PCC)*		*0*
0+000	450	Automobiles	-	16	-		56 Traffic light	0	-	Average (of DGAC and PCC)		0
0+000	450	Medium trucks	-	10	-		56 Traffic light	0	-	Average (of DGAC and PCC)		0
0+000	450	Heavy trucks	-	2	-		56 Traffic light	0	-	Average (of DGAC and PCC)		0
0+000	450	Buses	-	1	-		56 Traffic light	0	-	Average (of DGAC and PCC)		0
0+000	450	Motorcycles	-	1	-		56 Traffic light	0	-	Average (of DGAC and PCC)		0
0+000	450	Auxiliary Vehicle	-	-	-		56 Traffic light	0	-	Average (of DGAC and PCC)		0
Merced Ave SB	Traffic direction:	In entry direction										
2+808	*12150*	*Total*	-	*810*	-	-	*none*	-	-	*Average (of DGAC and PCC)*		*0*
2+808	12150	Automobiles	-	472	-		56 none	-	-	Average (of DGAC and PCC)		0
2+808	12150	Medium trucks	-	289	-		56 none	-	-	Average (of DGAC and PCC)		0
2+808	12150	Heavy trucks	-	38	-		56 none	-	-	Average (of DGAC and PCC)		0
2+808	12150	Buses	-	6	-		56 none	-	-	Average (of DGAC and PCC)		0
2+808	12150	Motorcycles	-	5	-		56 none	-	-	Average (of DGAC and PCC)		0
2+808	12150	Auxiliary Vehicle	-	-	-		56 none	-	-	Average (of DGAC and PCC)		0
3+429	*12150*	*Total*	-	*810*	-	-	*Traffic light*	*0*	-	*Average (of DGAC and PCC)*		*0*
3+429	12150	Automobiles	-	472	-		56 Traffic light	0	-	Average (of DGAC and PCC)		0
3+429	12150	Medium trucks	-	289	-		56 Traffic light	0	-	Average (of DGAC and PCC)		0
3+429	12150	Heavy trucks	-	38	-		56 Traffic light	0	-	Average (of DGAC and PCC)		0
3+429	12150	Buses	-	6	-		56 Traffic light	0	-	Average (of DGAC and PCC)		0
3+429	12150	Motorcycles	-	5	-		56 Traffic light	0	-	Average (of DGAC and PCC)		0

3+429	12150	Auxiliary Vehicle	-	-	-	56	Traffic light	0	-	Average (of DGAC and PCC)	0
3+934	-						-	-	-	-	-
0+000	*12150*	*Total*	-		*810*	-	-	*none*	-	-	*Average (of DGAC and PCC)*	*0*
0+000	12150	Automobiles	-		472	-	56	none	-	-	Average (of DGAC and PCC)	0
0+000	12150	Medium trucks	-		289	-	56	none	-	-	Average (of DGAC and PCC)	0
0+000	12150	Heavy trucks	-		38	-	56	none	-	-	Average (of DGAC and PCC)	0
0+000	12150	Buses	-		6	-	56	none	-	-	Average (of DGAC and PCC)	0
0+000	12150	Motorcycles	-		5	-	56	none	-	-	Average (of DGAC and PCC)	0
0+000	12150	Auxiliary Vehicle	-	-	-		56	none	-	-	Average (of DGAC and PCC)	0
Merced Ave NB	Traffic direction:	In entry direction										
2+808	*9225*	*Total*	-		*615*	-	-	*none*	-	-	*Average (of DGAC and PCC)*	*0*
2+808	9225	Automobiles	-		358	-	56	none	-	-	Average (of DGAC and PCC)	0
2+808	9225	Medium trucks	-		219	-	56	none	-	-	Average (of DGAC and PCC)	0
2+808	9225	Heavy trucks	-		29	-	56	none	-	-	Average (of DGAC and PCC)	0
2+808	9225	Buses	-		5	-	56	none	-	-	Average (of DGAC and PCC)	0
2+808	9225	Motorcycles	-		4	-	56	none	-	-	Average (of DGAC and PCC)	0
2+808	9225	Auxiliary Vehicle	-	-	-		56	none	-	-	Average (of DGAC and PCC)	0
3+322	*9225*	*Total*	-		*615*	-	-	*Traffic light*	*0*	-	*Average (of DGAC and PCC)*	*0*
3+322	9225	Automobiles	-		358	-	56	Traffic light	0	-	Average (of DGAC and PCC)	0
3+322	9225	Medium trucks	-		219	-	56	Traffic light	0	-	Average (of DGAC and PCC)	0
3+322	9225	Heavy trucks	-		29	-	56	Traffic light	0	-	Average (of DGAC and PCC)	0
3+322	9225	Buses	-		5	-	56	Traffic light	0	-	Average (of DGAC and PCC)	0
3+322	9225	Motorcycles	-		4	-	56	Traffic light	0	-	Average (of DGAC and PCC)	0
3+322	9225	Auxiliary Vehicle	-	-	-		56	Traffic light	0	-	Average (of DGAC and PCC)	0
3+920	-						-	-	-	-	-
0+000	*9225*	*Total*	-		*615*	-	-	*none*	-	-	*Average (of DGAC and PCC)*	*0*
0+000	9225	Automobiles	-		358	-	56	none	-	-	Average (of DGAC and PCC)	0
0+000	9225	Medium trucks	-		219	-	56	none	-	-	Average (of DGAC and PCC)	0
0+000	9225	Heavy trucks	-		29	-	56	none	-	-	Average (of DGAC and PCC)	0
0+000	9225	Buses	-		5	-	56	none	-	-	Average (of DGAC and PCC)	0
0+000	9225	Motorcycles	-		4	-	56	none	-	-	Average (of DGAC and PCC)	0
0+000	9225	Auxiliary Vehicle	-	-	-		56	none	-	-	Average (of DGAC and PCC)	0
Glendon Way EB	Traffic direction:	In entry direction										
2+808	*21090*	*Total*	-		*1406*	-	-	*none*	-	-	*Average (of DGAC and PCC)*	*0*
2+808	21090	Automobiles	-		820	-	48	none	-	-	Average (of DGAC and PCC)	0
2+808	21090	Medium trucks	-		501	-	48	none	-	-	Average (of DGAC and PCC)	0
2+808	21090	Heavy trucks	-		66	-	48	none	-	-	Average (of DGAC and PCC)	0
2+808	21090	Buses	-		10	-	48	none	-	-	Average (of DGAC and PCC)	0
2+808	21090	Motorcycles	-		9	-	48	none	-	-	Average (of DGAC and PCC)	0
2+808	21090	Auxiliary Vehicle	-	-	-		48	none	-	-	Average (of DGAC and PCC)	0
3+208	*21090*	*Total*	-		*1406*	-	-	*Traffic light*	*0*	-	*Average (of DGAC and PCC)*	*0*
3+208	21090	Automobiles	-		820	-	48	Traffic light	0	-	Average (of DGAC and PCC)	0
3+208	21090	Medium trucks	-		501	-	48	Traffic light	0	-	Average (of DGAC and PCC)	0
3+208	21090	Heavy trucks	-		66	-	48	Traffic light	0	-	Average (of DGAC and PCC)	0
3+208	21090	Buses	-		10	-	48	Traffic light	0	-	Average (of DGAC and PCC)	0
3+208	21090	Motorcycles	-		9	-	48	Traffic light	0	-	Average (of DGAC and PCC)	0
3+208	21090	Auxiliary Vehicle	-	-	-		48	Traffic light	0	-	Average (of DGAC and PCC)	0
3+410	-						-	-	-	-	-
0+000	*21090*	*Total*	-		*1406*	-	-	*none*	-	-	*Average (of DGAC and PCC)*	*0*
0+000	21090	Automobiles	-		820	-	48	none	-	-	Average (of DGAC and PCC)	0
0+000	21090	Medium trucks	-		501	-	48	none	-	-	Average (of DGAC and PCC)	0
0+000	21090	Heavy trucks	-		66	-	48	none	-	-	Average (of DGAC and PCC)	0
0+000	21090	Buses	-		10	-	48	none	-	-	Average (of DGAC and PCC)	0
0+000	21090	Motorcycles	-		9	-	48	none	-	-	Average (of DGAC and PCC)	0
0+000	21090	Auxiliary Vehicle	-	-	-		48	none	-	-	Average (of DGAC and PCC)	0
Glendon Way WB	Traffic direction:	In entry direction										
3+410	*14325*	*Total*	-		*955*	-	-	*none*	-	-	*Average (of DGAC and PCC)*	*0*
3+410	14325	Automobiles	-		557	-	48	none	-	-	Average (of DGAC and PCC)	0
3+410	14325	Medium trucks	-		340	-	48	none	-	-	Average (of DGAC and PCC)	0
3+410	14325	Heavy trucks	-		45	-	48	none	-	-	Average (of DGAC and PCC)	0
3+410	14325	Buses	-		7	-	48	none	-	-	Average (of DGAC and PCC)	0

3+410		14325	Motorcycles	-		6	-		48	none	-	-	Average (of DGAC and PCC)	0
3+410		14325	Auxiliary Vehicle	-	-	-			48	none	-	-	Average (of DGAC and PCC)	0
3+593		*14325*	*Total*	-		*955*	-	-		*Traffic light*	*0*	-	*Average (of DGAC and PCC)*	*0*
3+593		14325	Automobiles	-		557	-		48	Traffic light	0	-	Average (of DGAC and PCC)	0
3+593		14325	Medium trucks	-		340	-		48	Traffic light	0	-	Average (of DGAC and PCC)	0
3+593		14325	Heavy trucks	-		45	-		48	Traffic light	0	-	Average (of DGAC and PCC)	0
3+593		14325	Buses	-		7	-		48	Traffic light	0	-	Average (of DGAC and PCC)	0
3+593		14325	Motorcycles	-		6	-		48	Traffic light	0	-	Average (of DGAC and PCC)	0
3+593		14325	Auxiliary Vehicle	-	-	-			48	Traffic light	0	-	Average (of DGAC and PCC)	0
4+011	-									-	-	-	-	-
0+000		*14325*	*Total*	-		*955*	-	-		*none*	-	-	*Average (of DGAC and PCC)*	*0*
0+000		14325	Automobiles	-		557	-		48	none	-	-	Average (of DGAC and PCC)	0
0+000		14325	Medium trucks	-		340	-		48	none	-	-	Average (of DGAC and PCC)	0
0+000		14325	Heavy trucks	-		45	-		48	none	-	-	Average (of DGAC and PCC)	0
0+000		14325	Buses	-		7	-		48	none	-	-	Average (of DGAC and PCC)	0
0+000		14325	Motorcycles	-		6	-		48	none	-	-	Average (of DGAC and PCC)	0
0+000		14325	Auxiliary Vehicle	-	-	-			48	none	-	-	Average (of DGAC and PCC)	0
Rush St EB	Traffic direction:	In entry direction												
3+410		*25560*	*Total*	-		*1704*	-	-		*none*	-	-	*Average (of DGAC and PCC)*	*0*
3+410		25560	Automobiles	-		994	-		56	none	-	-	Average (of DGAC and PCC)	0
3+410		25560	Medium trucks	-		607	-		56	none	-	-	Average (of DGAC and PCC)	0
3+410		25560	Heavy trucks	-		80	-		56	none	-	-	Average (of DGAC and PCC)	0
3+410		25560	Buses	-		12	-		56	none	-	-	Average (of DGAC and PCC)	0
3+410		25560	Motorcycles	-		11	-		56	none	-	-	Average (of DGAC and PCC)	0
3+410		25560	Auxiliary Vehicle	-	-	-			56	none	-	-	Average (of DGAC and PCC)	0
3+836		*25560*	*Total*	-		*1704*	-	-		*Traffic light*	*0*	-	*Average (of DGAC and PCC)*	*0*
3+836		25560	Automobiles	-		994	-		56	Traffic light	0	-	Average (of DGAC and PCC)	0
3+836		25560	Medium trucks	-		607	-		56	Traffic light	0	-	Average (of DGAC and PCC)	0
3+836		25560	Heavy trucks	-		80	-		56	Traffic light	0	-	Average (of DGAC and PCC)	0
3+836		25560	Buses	-		12	-		56	Traffic light	0	-	Average (of DGAC and PCC)	0
3+836		25560	Motorcycles	-		11	-		56	Traffic light	0	-	Average (of DGAC and PCC)	0
3+836		25560	Auxiliary Vehicle	-	-	-			56	Traffic light	0	-	Average (of DGAC and PCC)	0
4+734	-									-	-	-	-	-
0+000		*25560*	*Total*	-		*1704*	-	-		*none*	-	-	*Average (of DGAC and PCC)*	*0*
0+000		25560	Automobiles	-		994	-		56	none	-	-	Average (of DGAC and PCC)	0
0+000		25560	Medium trucks	-		607	-		56	none	-	-	Average (of DGAC and PCC)	0
0+000		25560	Heavy trucks	-		80	-		56	none	-	-	Average (of DGAC and PCC)	0
0+000		25560	Buses	-		12	-		56	none	-	-	Average (of DGAC and PCC)	0
0+000		25560	Motorcycles	-		11	-		56	none	-	-	Average (of DGAC and PCC)	0
0+000		25560	Auxiliary Vehicle	-	-	-			56	none	-	-	Average (of DGAC and PCC)	0
Rush St WB	Traffic direction:	In entry direction												
4+734		*7965*	*Total*	-		*531*	-	-		*none*	-	-	*Average (of DGAC and PCC)*	*0*
4+734		7965	Automobiles	-		309	-		56	none	-	-	Average (of DGAC and PCC)	0
4+734		7965	Medium trucks	-		189	-		56	none	-	-	Average (of DGAC and PCC)	0
4+734		7965	Heavy trucks	-		25	-		56	none	-	-	Average (of DGAC and PCC)	0
4+734		7965	Buses	-		4	-		56	none	-	-	Average (of DGAC and PCC)	0
4+734		7965	Motorcycles	-		4	-		56	none	-	-	Average (of DGAC and PCC)	0
4+734		7965	Auxiliary Vehicle	-	-	-			56	none	-	-	Average (of DGAC and PCC)	0
5+605		*7965*	*Total*	-		*531*	-	-		*Traffic light*	*0*	-	*Average (of DGAC and PCC)*	*0*
5+605		7965	Automobiles	-		309	-		56	Traffic light	0	-	Average (of DGAC and PCC)	0
5+605		7965	Medium trucks	-		189	-		56	Traffic light	0	-	Average (of DGAC and PCC)	0
5+605		7965	Heavy trucks	-		25	-		56	Traffic light	0	-	Average (of DGAC and PCC)	0
5+605		7965	Buses	-		4	-		56	Traffic light	0	-	Average (of DGAC and PCC)	0
5+605		7965	Motorcycles	-		4	-		56	Traffic light	0	-	Average (of DGAC and PCC)	0
5+605		7965	Auxiliary Vehicle	-	-	-			56	Traffic light	0	-	Average (of DGAC and PCC)	0
6+061	-									-	-	-	-	-
0+000		*7965*	*Total*	-		*531*	-	-		*none*	-	-	*Average (of DGAC and PCC)*	*0*
0+000		7965	Automobiles	-		309	-		56	none	-	-	Average (of DGAC and PCC)	0
0+000		7965	Medium trucks	-		189	-		56	none	-	-	Average (of DGAC and PCC)	0
0+000		7965	Heavy trucks	-		25	-		56	none	-	-	Average (of DGAC and PCC)	0
0+000		7965	Buses	-		4	-		56	none	-	-	Average (of DGAC and PCC)	0

0+000	7965	Motorcycles	-		4	-		56	none	-	-	Average (of DGAC and PCC)	0
0+000	7965	Auxiliary Vehicle	-	-	-			56	none	-	-	Average (of DGAC and PCC)	0
Garvey Ave EB	Traffic direction:	In entry direction											
4+734	*259815*	*Total*	-		*17321*	-	-		*none*	-	-	*Average (of DGAC and PCC)*	*0*
4+734	259815	Automobiles	-		16167	-		56	none	-	-	Average (of DGAC and PCC)	0
4+734	259815	Medium trucks	-		987	-		56	none	-	-	Average (of DGAC and PCC)	0
4+734	259815	Heavy trucks	-		130	-		56	none	-	-	Average (of DGAC and PCC)	0
4+734	259815	Buses	-		19	-		56	none	-	-	Average (of DGAC and PCC)	0
4+734	259815	Motorcycles	-		18	-		56	none	-	-	Average (of DGAC and PCC)	0
4+734	259815	Auxiliary Vehicle	-	-	-			56	none	-	-	Average (of DGAC and PCC)	0
5+192	*41565*	*Total*	-		*2771*	-	-		*Traffic light*	*0*	-	*Average (of DGAC and PCC)*	*0*
5+192	41565	Automobiles	-		1617	-		56	Traffic light	0	-	Average (of DGAC and PCC)	0
5+192	41565	Medium trucks	-		987	-		56	Traffic light	0	-	Average (of DGAC and PCC)	0
5+192	41565	Heavy trucks	-		130	-		56	Traffic light	0	-	Average (of DGAC and PCC)	0
5+192	41565	Buses	-		19	-		56	Traffic light	0	-	Average (of DGAC and PCC)	0
5+192	41565	Motorcycles	-		18	-		56	Traffic light	0	-	Average (of DGAC and PCC)	0
5+192	41565	Auxiliary Vehicle	-	-	-			56	Traffic light	0	-	Average (of DGAC and PCC)	0
7+099	*41070*	*Total*	-		*2738*	-	-		*Traffic light*	*0*	-	*Average (of DGAC and PCC)*	*0*
7+099	41070	Automobiles	-		1598	-		56	Traffic light	0	-	Average (of DGAC and PCC)	0
7+099	41070	Medium trucks	-		976	-		56	Traffic light	0	-	Average (of DGAC and PCC)	0
7+099	41070	Heavy trucks	-		128	-		56	Traffic light	0	-	Average (of DGAC and PCC)	0
7+099	41070	Buses	-		19	-		56	Traffic light	0	-	Average (of DGAC and PCC)	0
7+099	41070	Motorcycles	-		17	-		56	Traffic light	0	-	Average (of DGAC and PCC)	0
7+099	41070	Auxiliary Vehicle	-	-	-			56	Traffic light	0	-	Average (of DGAC and PCC)	0
7+714	*40665*	*Total*	-		*2711*	-	-		*Traffic light*	*0*	-	*Average (of DGAC and PCC)*	*0*
7+714	40665	Automobiles	-		1583	-		56	Traffic light	0	-	Average (of DGAC and PCC)	0
7+714	40665	Medium trucks	-		966	-		56	Traffic light	0	-	Average (of DGAC and PCC)	0
7+714	40665	Heavy trucks	-		127	-		56	Traffic light	0	-	Average (of DGAC and PCC)	0
7+714	40665	Buses	-		18	-		56	Traffic light	0	-	Average (of DGAC and PCC)	0
7+714	40665	Motorcycles	-		17	-		56	Traffic light	0	-	Average (of DGAC and PCC)	0
7+714	40665	Auxiliary Vehicle	-	-	-			56	Traffic light	0	-	Average (of DGAC and PCC)	0
8+723	*35370*	*Total*	-		*2358*	-	-		*Traffic light*	*0*	-	*Average (of DGAC and PCC)*	*0*
8+723	35370	Automobiles	-		1376	-		56	Traffic light	0	-	Average (of DGAC and PCC)	0
8+723	35370	Medium trucks	-		841	-		56	Traffic light	0	-	Average (of DGAC and PCC)	0
8+723	35370	Heavy trucks	-		110	-		56	Traffic light	0	-	Average (of DGAC and PCC)	0
8+723	35370	Buses	-		16	-		56	Traffic light	0	-	Average (of DGAC and PCC)	0
8+723	35370	Motorcycles	-		15	-		56	Traffic light	0	-	Average (of DGAC and PCC)	0
8+723	35370	Auxiliary Vehicle	-	-	-			56	Traffic light	0	-	Average (of DGAC and PCC)	0
9+740	*33360*	*Total*	-		*2224*	-	-		*Traffic light*	*0*	-	*Average (of DGAC and PCC)*	*0*
9+740	33360	Automobiles	-		1298	-		56	Traffic light	0	-	Average (of DGAC and PCC)	0
9+740	33360	Medium trucks	-		793	-		56	Traffic light	0	-	Average (of DGAC and PCC)	0
9+740	33360	Heavy trucks	-		104	-		56	Traffic light	0	-	Average (of DGAC and PCC)	0
9+740	33360	Buses	-		15	-		56	Traffic light	0	-	Average (of DGAC and PCC)	0
9+740	33360	Motorcycles	-		14	-		56	Traffic light	0	-	Average (of DGAC and PCC)	0
9+740	33360	Auxiliary Vehicle	-	-	-			56	Traffic light	0	-	Average (of DGAC and PCC)	0
10+522	*34815*	*Total*	-		*2321*	-	-		*Traffic light*	*0*	-	*Average (of DGAC and PCC)*	*0*
10+522	34815	Automobiles	-		1354	-		56	Traffic light	0	-	Average (of DGAC and PCC)	0
10+522	34815	Medium trucks	-		827	-		56	Traffic light	0	-	Average (of DGAC and PCC)	0
10+522	34815	Heavy trucks	-		109	-		56	Traffic light	0	-	Average (of DGAC and PCC)	0
10+522	34815	Buses	-		16	-		56	Traffic light	0	-	Average (of DGAC and PCC)	0
10+522	34815	Motorcycles	-		15	-		56	Traffic light	0	-	Average (of DGAC and PCC)	0
10+522	34815	Auxiliary Vehicle	-	-	-			56	Traffic light	0	-	Average (of DGAC and PCC)	0
11+106	*28035*	*Total*	-		*1869*	-	-		*Traffic light*	*0*	-	*Average (of DGAC and PCC)*	*0*
11+106	28035	Automobiles	-		1090	-		56	Traffic light	0	-	Average (of DGAC and PCC)	0
11+106	28035	Medium trucks	-		666	-		56	Traffic light	0	-	Average (of DGAC and PCC)	0
11+106	28035	Heavy trucks	-		88	-		56	Traffic light	0	-	Average (of DGAC and PCC)	0
11+106	28035	Buses	-		13	-		56	Traffic light	0	-	Average (of DGAC and PCC)	0
11+106	28035	Motorcycles	-		12	-		56	Traffic light	0	-	Average (of DGAC and PCC)	0
11+106	28035	Auxiliary Vehicle	-	-	-			56	Traffic light	0	-	Average (of DGAC and PCC)	0
12+391	*26505*	*Total*	-		*1767*	-	-		*Traffic light*	*0*	-	*Average (of DGAC and PCC)*	*0*
12+391	26505	Automobiles	-		1031	-		56	Traffic light	0	-	Average (of DGAC and PCC)	0

12+391		26505	Medium trucks	-		630	-		56	Traffic light	0	-	Average (of DGAC and PCC)	0
12+391		26505	Heavy trucks	-		83	-		56	Traffic light	0	-	Average (of DGAC and PCC)	0
12+391		26505	Buses	-		12	-		56	Traffic light	0	-	Average (of DGAC and PCC)	0
12+391		26505	Motorcycles	-		11	-		56	Traffic light	0	-	Average (of DGAC and PCC)	0
12+391		26505	Auxiliary Vehicle	-	-	-			56	Traffic light	0	-	Average (of DGAC and PCC)	0
12+962	-								-		-	-	-	-
0+000		*26505*	*Total*	-		*1767*	-	-	*none*		-	-	*Average (of DGAC and PCC)*	*0*
0+000		26505	Automobiles	-		1031	-		56	none	-	-	Average (of DGAC and PCC)	0
0+000		26505	Medium trucks	-		630	-		56	none	-	-	Average (of DGAC and PCC)	0
0+000		26505	Heavy trucks	-		83	-		56	none	-	-	Average (of DGAC and PCC)	0
0+000		26505	Buses	-		12	-		56	none	-	-	Average (of DGAC and PCC)	0
0+000		26505	Motorcycles	-		11	-		56	none	-	-	Average (of DGAC and PCC)	0
0+000		26505	Auxiliary Vehicle	-	-	-			56	none	-	-	Average (of DGAC and PCC)	0
Garvey Ave WB	Traffic direction:	In entry direction												
4+734		*30465*	*Total*	-		*2031*	-	-	*none*		-	-	*Average (of DGAC and PCC)*	*0*
4+734		30465	Automobiles	-		1185	-		56	none	-	-	Average (of DGAC and PCC)	0
4+734		30465	Medium trucks	-		724	-		56	none	-	-	Average (of DGAC and PCC)	0
4+734		30465	Heavy trucks	-		95	-		56	none	-	-	Average (of DGAC and PCC)	0
4+734		30465	Buses	-		14	-		56	none	-	-	Average (of DGAC and PCC)	0
4+734		30465	Motorcycles	-		13	-		56	none	-	-	Average (of DGAC and PCC)	0
4+734		30465	Auxiliary Vehicle	-	-	-			56	none	-	-	Average (of DGAC and PCC)	0
5+289		*30465*	*Total*	-		*2031*	-	-	*none*		-	-	*Average (of DGAC and PCC)*	*0*
5+289		30465	Automobiles	-		1185	-		56	none	-	-	Average (of DGAC and PCC)	0
5+289		30465	Medium trucks	-		724	-		56	none	-	-	Average (of DGAC and PCC)	0
5+289		30465	Heavy trucks	-		95	-		56	none	-	-	Average (of DGAC and PCC)	0
5+289		30465	Buses	-		14	-		56	none	-	-	Average (of DGAC and PCC)	0
5+289		30465	Motorcycles	-		13	-		56	none	-	-	Average (of DGAC and PCC)	0
5+289		30465	Auxiliary Vehicle	-	-	-			56	none	-	-	Average (of DGAC and PCC)	0
6+571		*35970*	*Total*	-		*2398*	-	-	*Traffic light*		*0*	-	*Average (of DGAC and PCC)*	*0*
6+571		35970	Automobiles	-		1400	-		56	Traffic light	0	-	Average (of DGAC and PCC)	0
6+571		35970	Medium trucks	-		855	-		56	Traffic light	0	-	Average (of DGAC and PCC)	0
6+571		35970	Heavy trucks	-		112	-		56	Traffic light	0	-	Average (of DGAC and PCC)	0
6+571		35970	Buses	-		16	-		56	Traffic light	0	-	Average (of DGAC and PCC)	0
6+571		35970	Motorcycles	-		15	-		56	Traffic light	0	-	Average (of DGAC and PCC)	0
6+571		35970	Auxiliary Vehicle	-	-	-			56	Traffic light	0	-	Average (of DGAC and PCC)	0
7+167		*34860*	*Total*	-		*2324*	-	-	*Traffic light*		*0*	-	*Average (of DGAC and PCC)*	*0*
7+167		34860	Automobiles	-		1356	-		56	Traffic light	0	-	Average (of DGAC and PCC)	0
7+167		34860	Medium trucks	-		828	-		56	Traffic light	0	-	Average (of DGAC and PCC)	0
7+167		34860	Heavy trucks	-		109	-		56	Traffic light	0	-	Average (of DGAC and PCC)	0
7+167		34860	Buses	-		16	-		56	Traffic light	0	-	Average (of DGAC and PCC)	0
7+167		34860	Motorcycles	-		15	-		56	Traffic light	0	-	Average (of DGAC and PCC)	0
7+167		34860	Auxiliary Vehicle	-	-	-			56	Traffic light	0	-	Average (of DGAC and PCC)	0
7+933		*39390*	*Total*	-		*2626*	-	-	*Traffic light*		*0*	-	*Average (of DGAC and PCC)*	*0*
7+933		39390	Automobiles	-		1532	-		56	Traffic light	0	-	Average (of DGAC and PCC)	0
7+933		39390	Medium trucks	-		936	-		56	Traffic light	0	-	Average (of DGAC and PCC)	0
7+933		39390	Heavy trucks	-		123	-		56	Traffic light	0	-	Average (of DGAC and PCC)	0
7+933		39390	Buses	-		18	-		56	Traffic light	0	-	Average (of DGAC and PCC)	0
7+933		39390	Motorcycles	-		17	-		56	Traffic light	0	-	Average (of DGAC and PCC)	0
7+933		39390	Auxiliary Vehicle	-	-	-			56	Traffic light	0	-	Average (of DGAC and PCC)	0
8+957		*38205*	*Total*	-		*2547*	-	-	*Traffic light*		*0*	-	*Average (of DGAC and PCC)*	*0*
8+957		38205	Automobiles	-		1487	-		56	Traffic light	0	-	Average (of DGAC and PCC)	0
8+957		38205	Medium trucks	-		908	-		56	Traffic light	0	-	Average (of DGAC and PCC)	0
8+957		38205	Heavy trucks	-		119	-		56	Traffic light	0	-	Average (of DGAC and PCC)	0
8+957		38205	Buses	-		17	-		56	Traffic light	0	-	Average (of DGAC and PCC)	0
8+957		38205	Motorcycles	-		16	-		56	Traffic light	0	-	Average (of DGAC and PCC)	0
8+957		38205	Auxiliary Vehicle	-	-	-			56	Traffic light	0	-	Average (of DGAC and PCC)	0
9+957		*40110*	*Total*	-		*2674*	-	-	*Traffic light*		*0*	-	*Average (of DGAC and PCC)*	*0*
9+957		40110	Automobiles	-		1561	-		56	Traffic light	0	-	Average (of DGAC and PCC)	0
9+957		40110	Medium trucks	-		953	-		56	Traffic light	0	-	Average (of DGAC and PCC)	0
9+957		40110	Heavy trucks	-		125	-		56	Traffic light	0	-	Average (of DGAC and PCC)	0
9+957		40110	Buses	-		18	-		56	Traffic light	0	-	Average (of DGAC and PCC)	0

9+957	40110	Motorcycles	-	17	-	56	Traffic light	0	-	Average (of DGAC and PCC)	0
9+957	40110	Auxiliary Vehicle	-	-	-	56	Traffic light	0	-	Average (of DGAC and PCC)	0
10+579	*35760*	*Total*	-	*2384*	-	-	*Traffic light*	*0*	-	*Average (of DGAC and PCC)*	*0*
10+579	35760	Automobiles	-	1391	-	56	Traffic light	0	-	Average (of DGAC and PCC)	0
10+579	35760	Medium trucks	-	850	-	56	Traffic light	0	-	Average (of DGAC and PCC)	0
10+579	35760	Heavy trucks	-	112	-	56	Traffic light	0	-	Average (of DGAC and PCC)	0
10+579	35760	Buses	-	16	-	56	Traffic light	0	-	Average (of DGAC and PCC)	0
10+579	35760	Motorcycles	-	15	-	56	Traffic light	0	-	Average (of DGAC and PCC)	0
10+579	35760	Auxiliary Vehicle	-	-	-	56	Traffic light	0	-	Average (of DGAC and PCC)	0
12+470	*39885*	*Total*	-	*2659*	-	-	*Traffic light*	*0*	-	*Average (of DGAC and PCC)*	*0*
12+470	39885	Automobiles	-	1552	-	56	Traffic light	0	-	Average (of DGAC and PCC)	0
12+470	39885	Medium trucks	-	948	-	56	Traffic light	0	-	Average (of DGAC and PCC)	0
12+470	39885	Heavy trucks	-	124	-	56	Traffic light	0	-	Average (of DGAC and PCC)	0
12+470	39885	Buses	-	18	-	56	Traffic light	0	-	Average (of DGAC and PCC)	0
12+470	39885	Motorcycles	-	17	-	56	Traffic light	0	-	Average (of DGAC and PCC)	0
12+470	39885	Auxiliary Vehicle	-	-	-	56	Traffic light	0	-	Average (of DGAC and PCC)	0
12+959	-						-	-	-	-	-
0+000	*39885*	*Total*	-	*2659*	-	-	*none*	-	-	*Average (of DGAC and PCC)*	*0*
0+000	39885	Automobiles	-	1552	-	56	none	-	-	Average (of DGAC and PCC)	0
0+000	39885	Medium trucks	-	948	-	56	none	-	-	Average (of DGAC and PCC)	0
0+000	39885	Heavy trucks	-	124	-	56	none	-	-	Average (of DGAC and PCC)	0
0+000	39885	Buses	-	18	-	56	none	-	-	Average (of DGAC and PCC)	0
0+000	39885	Motorcycles	-	17	-	56	none	-	-	Average (of DGAC and PCC)	0
0+000	39885	Auxiliary Vehicle	-	-	-	56	none	-	-	Average (of DGAC and PCC)	0
Las Tunas Dr EB	Traffic direction:	In entry direction									
2+808	*37575*	*Total*	-	*2505*	-	-	*none*	-	-	*Average (of DGAC and PCC)*	*0*
2+808	37575	Automobiles	-	1462	-	48	none	-	-	Average (of DGAC and PCC)	0
2+808	37575	Medium trucks	-	893	-	48	none	-	-	Average (of DGAC and PCC)	0
2+808	37575	Heavy trucks	-	117	-	48	none	-	-	Average (of DGAC and PCC)	0
2+808	37575	Buses	-	17	-	48	none	-	-	Average (of DGAC and PCC)	0
2+808	37575	Motorcycles	-	16	-	48	none	-	-	Average (of DGAC and PCC)	0
2+808	37575	Auxiliary Vehicle	-	-	-	48	none	-	-	Average (of DGAC and PCC)	0
3+588	*37575*	*Total*	-	*2505*	-	-	*none*	-	-	*Average (of DGAC and PCC)*	*0*
3+588	37575	Automobiles	-	1462	-	48	none	-	-	Average (of DGAC and PCC)	0
3+588	37575	Medium trucks	-	893	-	48	none	-	-	Average (of DGAC and PCC)	0
3+588	37575	Heavy trucks	-	117	-	48	none	-	-	Average (of DGAC and PCC)	0
3+588	37575	Buses	-	17	-	48	none	-	-	Average (of DGAC and PCC)	0
3+588	37575	Motorcycles	-	16	-	48	none	-	-	Average (of DGAC and PCC)	0
3+588	37575	Auxiliary Vehicle	-	-	-	48	none	-	-	Average (of DGAC and PCC)	0
3+744	*37575*	*Total*	-	*2505*	-	-	*Traffic light*	*0*	-	*Average (of DGAC and PCC)*	*0*
3+744	37575	Automobiles	-	1462	-	48	Traffic light	0	-	Average (of DGAC and PCC)	0
3+744	37575	Medium trucks	-	893	-	48	Traffic light	0	-	Average (of DGAC and PCC)	0
3+744	37575	Heavy trucks	-	117	-	48	Traffic light	0	-	Average (of DGAC and PCC)	0
3+744	37575	Buses	-	17	-	48	Traffic light	0	-	Average (of DGAC and PCC)	0
3+744	37575	Motorcycles	-	16	-	48	Traffic light	0	-	Average (of DGAC and PCC)	0
3+744	37575	Auxiliary Vehicle	-	-	-	48	Traffic light	0	-	Average (of DGAC and PCC)	0
3+954	*37575*	*Total*	-	*2505*	-	-	*none*	-	-	*Average (of DGAC and PCC)*	*0*
3+954	37575	Automobiles	-	1462	-	48	none	-	-	Average (of DGAC and PCC)	0
3+954	37575	Medium trucks	-	893	-	48	none	-	-	Average (of DGAC and PCC)	0
3+954	37575	Heavy trucks	-	117	-	48	none	-	-	Average (of DGAC and PCC)	0
3+954	37575	Buses	-	17	-	48	none	-	-	Average (of DGAC and PCC)	0
3+954	37575	Motorcycles	-	16	-	48	none	-	-	Average (of DGAC and PCC)	0
3+954	37575	Auxiliary Vehicle	-	-	-	48	none	-	-	Average (of DGAC and PCC)	0
4+215	*37575*	*Total*	-	*2505*	-	-	*none*	-	-	*Average (of DGAC and PCC)*	*0*
4+215	37575	Automobiles	-	1462	-	48	none	-	-	Average (of DGAC and PCC)	0
4+215	37575	Medium trucks	-	893	-	48	none	-	-	Average (of DGAC and PCC)	0
4+215	37575	Heavy trucks	-	117	-	48	none	-	-	Average (of DGAC and PCC)	0
4+215	37575	Buses	-	17	-	48	none	-	-	Average (of DGAC and PCC)	0
4+215	37575	Motorcycles	-	16	-	48	none	-	-	Average (of DGAC and PCC)	0
4+215	37575	Auxiliary Vehicle	-	-	-	48	none	-	-	Average (of DGAC and PCC)	0
4+861	-						-	-	-	-	-

0+000	*37575*	*Total*	*-*	*2505*	*-*	*-*	*none*	*-*	*-*	*Average (of DGAC and PCC)*		*0*
0+000	37575	Automobiles	-	1462	-		48 none	-	-	Average (of DGAC and PCC)		0
0+000	37575	Medium trucks	-	893	-		48 none	-	-	Average (of DGAC and PCC)		0
0+000	37575	Heavy trucks	-	117	-		48 none	-	-	Average (of DGAC and PCC)		0
0+000	37575	Buses	-	17	-		48 none	-	-	Average (of DGAC and PCC)		0
0+000	37575	Motorcycles	-	16	-		48 none	-	-	Average (of DGAC and PCC)		0
0+000	37575	Auxiliary Vehicle	-	-	-		48 none	-	-	Average (of DGAC and PCC)		0
Las Tunas Dr WB	Traffic direction:	In entry direction										
3+954	*36300*	*Total*	*-*	*2420*	*-*	*-*	*none*	*-*	*-*	*Average (of DGAC and PCC)*		*0*
3+954	36300	Automobiles	-	1413	-		48 none	-	-	Average (of DGAC and PCC)		0
3+954	36300	Medium trucks	-	863	-		48 none	-	-	Average (of DGAC and PCC)		0
3+954	36300	Heavy trucks	-	113	-		48 none	-	-	Average (of DGAC and PCC)		0
3+954	36300	Buses	-	16	-		48 none	-	-	Average (of DGAC and PCC)		0
3+954	36300	Motorcycles	-	15	-		48 none	-	-	Average (of DGAC and PCC)		0
3+954	36300	Auxiliary Vehicle	-	-	-		48 none	-	-	Average (of DGAC and PCC)		0
4+598	*36300*	*Total*	*-*	*2420*	*-*	*-*	*Traffic light*	*0*	*-*	*Average (of DGAC and PCC)*		*0*
4+598	36300	Automobiles	-	1413	-		48 Traffic light	0	-	Average (of DGAC and PCC)		0
4+598	36300	Medium trucks	-	863	-		48 Traffic light	0	-	Average (of DGAC and PCC)		0
4+598	36300	Heavy trucks	-	113	-		48 Traffic light	0	-	Average (of DGAC and PCC)		0
4+598	36300	Buses	-	16	-		48 Traffic light	0	-	Average (of DGAC and PCC)		0
4+598	36300	Motorcycles	-	15	-		48 Traffic light	0	-	Average (of DGAC and PCC)		0
4+598	36300	Auxiliary Vehicle	-	-	-		48 Traffic light	0	-	Average (of DGAC and PCC)		0
4+863	*36300*	*Total*	*-*	*2420*	*-*	*-*	*none*	*-*	*-*	*Average (of DGAC and PCC)*		*0*
4+863	36300	Automobiles	-	1413	-		48 none	-	-	Average (of DGAC and PCC)		0
4+863	36300	Medium trucks	-	863	-		48 none	-	-	Average (of DGAC and PCC)		0
4+863	36300	Heavy trucks	-	113	-		48 none	-	-	Average (of DGAC and PCC)		0
4+863	36300	Buses	-	16	-		48 none	-	-	Average (of DGAC and PCC)		0
4+863	36300	Motorcycles	-	15	-		48 none	-	-	Average (of DGAC and PCC)		0
4+863	36300	Auxiliary Vehicle	-	-	-		48 none	-	-	Average (of DGAC and PCC)		0
5+049	*36300*	*Total*	*-*	*2420*	*-*	*-*	*Traffic light*	*0*	*-*	*Average (of DGAC and PCC)*		*0*
5+049	36300	Automobiles	-	1413	-		48 Traffic light	0	-	Average (of DGAC and PCC)		0
5+049	36300	Medium trucks	-	863	-		48 Traffic light	0	-	Average (of DGAC and PCC)		0
5+049	36300	Heavy trucks	-	113	-		48 Traffic light	0	-	Average (of DGAC and PCC)		0
5+049	36300	Buses	-	16	-		48 Traffic light	0	-	Average (of DGAC and PCC)		0
5+049	36300	Motorcycles	-	15	-		48 Traffic light	0	-	Average (of DGAC and PCC)		0
5+049	36300	Auxiliary Vehicle	-	-	-		48 Traffic light	0	-	Average (of DGAC and PCC)		0
5+216	*36300*	*Total*	*-*	*2420*	*-*	*-*	*none*	*-*	*-*	*Average (of DGAC and PCC)*		*0*
5+216	36300	Automobiles	-	1413	-		48 none	-	-	Average (of DGAC and PCC)		0
5+216	36300	Medium trucks	-	863	-		48 none	-	-	Average (of DGAC and PCC)		0
5+216	36300	Heavy trucks	-	113	-		48 none	-	-	Average (of DGAC and PCC)		0
5+216	36300	Buses	-	16	-		48 none	-	-	Average (of DGAC and PCC)		0
5+216	36300	Motorcycles	-	15	-		48 none	-	-	Average (of DGAC and PCC)		0
5+216	36300	Auxiliary Vehicle	-	-	-		48 none	-	-	Average (of DGAC and PCC)		0
6+006	-						-	-	-	-	-	
0+000	*36300*	*Total*	*-*	*2420*	*-*	*-*	*none*	*-*	*-*	*Average (of DGAC and PCC)*		*0*
0+000	36300	Automobiles	-	1413	-		48 none	-	-	Average (of DGAC and PCC)		0
0+000	36300	Medium trucks	-	863	-		48 none	-	-	Average (of DGAC and PCC)		0
0+000	36300	Heavy trucks	-	113	-		48 none	-	-	Average (of DGAC and PCC)		0
0+000	36300	Buses	-	16	-		48 none	-	-	Average (of DGAC and PCC)		0
0+000	36300	Motorcycles	-	15	-		48 none	-	-	Average (of DGAC and PCC)		0
0+000	36300	Auxiliary Vehicle	-	-	-		48 none	-	-	Average (of DGAC and PCC)		0
Whitmore St	Traffic direction:	In entry direction										
4+911	*7590*	*Total*	*-*	*506*	*-*	*-*	*Traffic light*	*0*	*100*	*Average (of DGAC and PCC)*		*0*
4+911	7590	Automobiles	-	294	-		40 Traffic light	0	100	Average (of DGAC and PCC)		0
4+911	7590	Medium trucks	-	180	-		40 Traffic light	0	100	Average (of DGAC and PCC)		0
4+911	7590	Heavy trucks	-	24	-		40 Traffic light	0	100	Average (of DGAC and PCC)		0
4+911	7590	Buses	-	4	-		40 Traffic light	0	100	Average (of DGAC and PCC)		0
4+911	7590	Motorcycles	-	4	-		40 Traffic light	0	100	Average (of DGAC and PCC)		0
4+911	7590	Auxiliary Vehicle	-	-	-		40 Traffic light	0	100	Average (of DGAC and PCC)		0
5+219	-						-	-	-	-	-	
0+000	*7575*	*Total*	*-*	*505*	*-*	*-*	*none*	*-*	*-*	*Average (of DGAC and PCC)*		*0*

0+000	7575	Automobiles	-	294	-	40	none	-	-		Average (of DGAC and PCC)	0
0+000	7575	Medium trucks	-	179	-	40	none	-	-		Average (of DGAC and PCC)	0
0+000	7575	Heavy trucks	-	24	-	40	none	-	-		Average (of DGAC and PCC)	0
0+000	7575	Buses	-	4	-	40	none	-	-		Average (of DGAC and PCC)	0
0+000	7575	Motorcycles	-	4	-	40	none	-	-		Average (of DGAC and PCC)	0
0+000	7575	Auxiliary Vehicle	-	-	-	40	none	-	-		Average (of DGAC and PCC)	0
Telstar Ave EB	Traffic direction:	In entry direction										
4+911	*35010*	*Total*	-	*2334*	-	-	*Traffic light*	*0*		*100*	*Average (of DGAC and PCC)*	*0*
4+911	35010	Automobiles	-	1362	-	56	Traffic light	0		100	Average (of DGAC and PCC)	0
4+911	35010	Medium trucks	-	832	-	56	Traffic light	0		100	Average (of DGAC and PCC)	0
4+911	35010	Heavy trucks	-	109	-	56	Traffic light	0		100	Average (of DGAC and PCC)	0
4+911	35010	Buses	-	16	-	56	Traffic light	0		100	Average (of DGAC and PCC)	0
4+911	35010	Motorcycles	-	15	-	56	Traffic light	0		100	Average (of DGAC and PCC)	0
4+911	35010	Auxiliary Vehicle	-	-	-	56	Traffic light	0		100	Average (of DGAC and PCC)	0
5+021	*35010*	*Total*	-	*2334*	-	-	*none*	-	-		*Average (of DGAC and PCC)*	*0*
5+021	35010	Automobiles	-	1362	-	56	none	-	-		Average (of DGAC and PCC)	0
5+021	35010	Medium trucks	-	832	-	56	none	-	-		Average (of DGAC and PCC)	0
5+021	35010	Heavy trucks	-	109	-	56	none	-	-		Average (of DGAC and PCC)	0
5+021	35010	Buses	-	16	-	56	none	-	-		Average (of DGAC and PCC)	0
5+021	35010	Motorcycles	-	15	-	56	none	-	-		Average (of DGAC and PCC)	0
5+021	35010	Auxiliary Vehicle	-	-	-	56	none	-	-		Average (of DGAC and PCC)	0
5+045	*35010*	*Total*	-	*2334*	-	-	*none*	-	-		*Average (of DGAC and PCC)*	*0*
5+045	35010	Automobiles	-	1362	-	56	none	-	-		Average (of DGAC and PCC)	0
5+045	35010	Medium trucks	-	832	-	56	none	-	-		Average (of DGAC and PCC)	0
5+045	35010	Heavy trucks	-	109	-	56	none	-	-		Average (of DGAC and PCC)	0
5+045	35010	Buses	-	16	-	56	none	-	-		Average (of DGAC and PCC)	0
5+045	35010	Motorcycles	-	15	-	56	none	-	-		Average (of DGAC and PCC)	0
5+045	35010	Auxiliary Vehicle	-	-	-	56	none	-	-		Average (of DGAC and PCC)	0
5+156	*26760*	*Total*	-	*1784*	-	-	*Traffic light*	*0*	-		*Average (of DGAC and PCC)*	*0*
5+156	26760	Automobiles	-	1041	-	56	Traffic light	0	-		Average (of DGAC and PCC)	0
5+156	26760	Medium trucks	-	636	-	56	Traffic light	0	-		Average (of DGAC and PCC)	0
5+156	26760	Heavy trucks	-	84	-	56	Traffic light	0	-		Average (of DGAC and PCC)	0
5+156	26760	Buses	-	12	-	56	Traffic light	0	-		Average (of DGAC and PCC)	0
5+156	26760	Motorcycles	-	11	-	56	Traffic light	0	-		Average (of DGAC and PCC)	0
5+156	26760	Auxiliary Vehicle	-	-	-	56	Traffic light	0	-		Average (of DGAC and PCC)	0
5+647	*8460*	*Total*	-	*564*	-	-	*none*	-	-		*Average (of DGAC and PCC)*	*0*
5+647	8460	Automobiles	-	328	-	56	none	-	-		Average (of DGAC and PCC)	0
5+647	8460	Medium trucks	-	201	-	56	none	-	-		Average (of DGAC and PCC)	0
5+647	8460	Heavy trucks	-	27	-	56	none	-	-		Average (of DGAC and PCC)	0
5+647	8460	Buses	-	4	-	56	none	-	-		Average (of DGAC and PCC)	0
5+647	8460	Motorcycles	-	4	-	56	none	-	-		Average (of DGAC and PCC)	0
5+647	8460	Auxiliary Vehicle	-	-	-	56	none	-	-		Average (of DGAC and PCC)	0
5+970	*8460*	*Total*	-	*564*	-	-	*none*	-	-		*Average (of DGAC and PCC)*	*0*
5+970	8460	Automobiles	-	328	-	56	none	-	-		Average (of DGAC and PCC)	0
5+970	8460	Medium trucks	-	201	-	56	none	-	-		Average (of DGAC and PCC)	0
5+970	8460	Heavy trucks	-	27	-	56	none	-	-		Average (of DGAC and PCC)	0
5+970	8460	Buses	-	4	-	56	none	-	-		Average (of DGAC and PCC)	0
5+970	8460	Motorcycles	-	4	-	56	none	-	-		Average (of DGAC and PCC)	0
5+970	8460	Auxiliary Vehicle	-	-	-	56	none	-	-		Average (of DGAC and PCC)	0
6+158	*6945*	*Total*	-	*463*	-	-	*none*	-	-		*Average (of DGAC and PCC)*	*0*
6+158	6945	Automobiles	-	269	-	56	none	-	-		Average (of DGAC and PCC)	0
6+158	6945	Medium trucks	-	165	-	56	none	-	-		Average (of DGAC and PCC)	0
6+158	6945	Heavy trucks	-	22	-	56	none	-	-		Average (of DGAC and PCC)	0
6+158	6945	Buses	-	4	-	56	none	-	-		Average (of DGAC and PCC)	0
6+158	6945	Motorcycles	-	3	-	56	none	-	-		Average (of DGAC and PCC)	0
6+158	6945	Auxiliary Vehicle	-	-	-	56	none	-	-		Average (of DGAC and PCC)	0
6+454	*6945*	*Total*	-	*463*	-	-	*none*	-	-		*Average (of DGAC and PCC)*	*0*
6+454	6945	Automobiles	-	269	-	56	none	-	-		Average (of DGAC and PCC)	0
6+454	6945	Medium trucks	-	165	-	56	none	-	-		Average (of DGAC and PCC)	0
6+454	6945	Heavy trucks	-	22	-	56	none	-	-		Average (of DGAC and PCC)	0
6+454	6945	Buses	-	4	-	56	none	-	-		Average (of DGAC and PCC)	0

6+454		6945	Motorcycles	-		3	-	56	none	-	-	Average (of DGAC and PCC)	0
6+454		6945	Auxiliary Vehicle	-	-	-		56	none	-	-	Average (of DGAC and PCC)	0
6+524		*6945*	*Total*	-		*463*	-	-	*none*	-	-	*Average (of DGAC and PCC)*	*0*
6+524		6945	Automobiles	-		269	-	56	none	-	-	Average (of DGAC and PCC)	0
6+524		6945	Medium trucks	-		165	-	56	none	-	-	Average (of DGAC and PCC)	0
6+524		6945	Heavy trucks	-		22	-	56	none	-	-	Average (of DGAC and PCC)	0
6+524		6945	Buses	-		4	-	56	none	-	-	Average (of DGAC and PCC)	0
6+524		6945	Motorcycles	-		3	-	56	none	-	-	Average (of DGAC and PCC)	0
6+524		6945	Auxiliary Vehicle	-	-	-		56	none	-	-	Average (of DGAC and PCC)	0
6+743	-								-	-	-	-	-
0+000	-								-	-	-	-	0
Telstar Ave WB	Traffic direction:		In entry direction										
4+911		*6360*	*Total*	-		*424*	-	-	*none*	-	-	*Average (of DGAC and PCC)*	*0*
4+911		6360	Automobiles	-		247	-	56	none	-	-	Average (of DGAC and PCC)	0
4+911		6360	Medium trucks	-		151	-	56	none	-	-	Average (of DGAC and PCC)	0
4+911		6360	Heavy trucks	-		20	-	56	none	-	-	Average (of DGAC and PCC)	0
4+911		6360	Buses	-		3	-	56	none	-	-	Average (of DGAC and PCC)	0
4+911		6360	Motorcycles	-		3	-	56	none	-	-	Average (of DGAC and PCC)	0
4+911		6360	Auxiliary Vehicle	-	-	-		56	none	-	-	Average (of DGAC and PCC)	0
5+047		*6360*	*Total*	-		*424*	-	-	*none*	-	-	*Average (of DGAC and PCC)*	*0*
5+047		6360	Automobiles	-		247	-	56	none	-	-	Average (of DGAC and PCC)	0
5+047		6360	Medium trucks	-		151	-	56	none	-	-	Average (of DGAC and PCC)	0
5+047		6360	Heavy trucks	-		20	-	56	none	-	-	Average (of DGAC and PCC)	0
5+047		6360	Buses	-		3	-	56	none	-	-	Average (of DGAC and PCC)	0
5+047		6360	Motorcycles	-		3	-	56	none	-	-	Average (of DGAC and PCC)	0
5+047		6360	Auxiliary Vehicle	-	-	-		56	none	-	-	Average (of DGAC and PCC)	0
5+190		*6360*	*Total*	-		*424*	-	-	*none*	-	-	*Average (of DGAC and PCC)*	*0*
5+190		6360	Automobiles	-		247	-	56	none	-	-	Average (of DGAC and PCC)	0
5+190		6360	Medium trucks	-		151	-	56	none	-	-	Average (of DGAC and PCC)	0
5+190		6360	Heavy trucks	-		20	-	56	none	-	-	Average (of DGAC and PCC)	0
5+190		6360	Buses	-		3	-	56	none	-	-	Average (of DGAC and PCC)	0
5+190		6360	Motorcycles	-		3	-	56	none	-	-	Average (of DGAC and PCC)	0
5+190		6360	Auxiliary Vehicle	-	-	-		56	none	-	-	Average (of DGAC and PCC)	0
5+492		*8010*	*Total*	-		*534*	-	-	*none*	-	-	*Average (of DGAC and PCC)*	*0*
5+492		8010	Automobiles	-		311	-	56	none	-	-	Average (of DGAC and PCC)	0
5+492		8010	Medium trucks	-		190	-	56	none	-	-	Average (of DGAC and PCC)	0
5+492		8010	Heavy trucks	-		25	-	56	none	-	-	Average (of DGAC and PCC)	0
5+492		8010	Buses	-		4	-	56	none	-	-	Average (of DGAC and PCC)	0
5+492		8010	Motorcycles	-		4	-	56	none	-	-	Average (of DGAC and PCC)	0
5+492		8010	Auxiliary Vehicle	-	-	-		56	none	-	-	Average (of DGAC and PCC)	0
5+670		*8010*	*Total*	-		*534*	-	-	*none*	-	-	*Average (of DGAC and PCC)*	*0*
5+670		8010	Automobiles	-		311	-	56	none	-	-	Average (of DGAC and PCC)	0
5+670		8010	Medium trucks	-		190	-	56	none	-	-	Average (of DGAC and PCC)	0
5+670		8010	Heavy trucks	-		25	-	56	none	-	-	Average (of DGAC and PCC)	0
5+670		8010	Buses	-		4	-	56	none	-	-	Average (of DGAC and PCC)	0
5+670		8010	Motorcycles	-		4	-	56	none	-	-	Average (of DGAC and PCC)	0
5+670		8010	Auxiliary Vehicle	-	-	-		56	none	-	-	Average (of DGAC and PCC)	0
5+986		*23100*	*Total*	-		*1540*	-	-	*none*	-	-	*Average (of DGAC and PCC)*	*0*
5+986		23100	Automobiles	-		898	-	56	none	-	-	Average (of DGAC and PCC)	0
5+986		23100	Medium trucks	-		549	-	56	none	-	-	Average (of DGAC and PCC)	0
5+986		23100	Heavy trucks	-		72	-	56	none	-	-	Average (of DGAC and PCC)	0
5+986		23100	Buses	-		11	-	56	none	-	-	Average (of DGAC and PCC)	0
5+986		23100	Motorcycles	-		10	-	56	none	-	-	Average (of DGAC and PCC)	0
5+986		23100	Auxiliary Vehicle	-	-	-		56	none	-	-	Average (of DGAC and PCC)	0
6+475		*34110*	*Total*	-		*2274*	-	-	*none*	-	-	*Average (of DGAC and PCC)*	*0*
6+475		34110	Automobiles	-		1327	-	56	none	-	-	Average (of DGAC and PCC)	0
6+475		34110	Medium trucks	-		811	-	56	none	-	-	Average (of DGAC and PCC)	0
6+475		34110	Heavy trucks	-		106	-	56	none	-	-	Average (of DGAC and PCC)	0
6+475		34110	Buses	-		15	-	56	none	-	-	Average (of DGAC and PCC)	0
6+475		34110	Motorcycles	-		15	-	56	none	-	-	Average (of DGAC and PCC)	0
6+475		34110	Auxiliary Vehicle	-	-	-		56	none	-	-	Average (of DGAC and PCC)	0

6+596	*34110*	*Total*	-	*2274*	-	-	*none*	-	-	*Average (of DGAC and PCC)*		*0*
6+596	34110	Automobiles	-	1327	-		56	none	-	-	Average (of DGAC and PCC)	0
6+596	34110	Medium trucks	-	811	-		56	none	-	-	Average (of DGAC and PCC)	0
6+596	34110	Heavy trucks	-	106	-		56	none	-	-	Average (of DGAC and PCC)	0
6+596	34110	Buses	-	15	-		56	none	-	-	Average (of DGAC and PCC)	0
6+596	34110	Motorcycles	-	15	-		56	none	-	-	Average (of DGAC and PCC)	0
6+596	34110	Auxiliary Vehicle	-	-	-		56	none	-	-	Average (of DGAC and PCC)	0
6+734	-						-	-	-	-		-
0+000	*34110*	*Total*	-	*2274*	-	-	*none*	-	-	*Average (of DGAC and PCC)*		*0*
0+000	34110	Automobiles	-	1327	-		56	none	-	-	Average (of DGAC and PCC)	0
0+000	34110	Medium trucks	-	811	-		56	none	-	-	Average (of DGAC and PCC)	0
0+000	34110	Heavy trucks	-	106	-		56	none	-	-	Average (of DGAC and PCC)	0
0+000	34110	Buses	-	15	-		56	none	-	-	Average (of DGAC and PCC)	0
0+000	34110	Motorcycles	-	15	-		56	none	-	-	Average (of DGAC and PCC)	0
0+000	34110	Auxiliary Vehicle	-	-	-		56	none	-	-	Average (of DGAC and PCC)	0
Aerojet Ave SB	Traffic direction:	In entry direction										
5+492	*11685*	*Total*	-	*779*	-	-	*none*	-	-	*Average (of DGAC and PCC)*		*0*
5+492	11685	Automobiles	-	450	-		40	none	-	-	Average (of DGAC and PCC)	0
5+492	11685	Medium trucks	-	281	-		40	none	-	-	Average (of DGAC and PCC)	0
5+492	11685	Heavy trucks	-	37	-		40	none	-	-	Average (of DGAC and PCC)	0
5+492	11685	Buses	-	6	-		40	none	-	-	Average (of DGAC and PCC)	0
5+492	11685	Motorcycles	-	5	-		40	none	-	-	Average (of DGAC and PCC)	0
5+492	11685	Auxiliary Vehicle	-	-	-		40	none	-	-	Average (of DGAC and PCC)	0
5+900	-						-	-	-	-		-
0+000	*2025*	*Total*	-	*135*	-	-	*none*	-	-	*Average (of DGAC and PCC)*		*0*
0+000	2025	Automobiles	-	78	-		40	none	-	-	Average (of DGAC and PCC)	0
0+000	2025	Medium trucks	-	48	-		40	none	-	-	Average (of DGAC and PCC)	0
0+000	2025	Heavy trucks	-	7	-		40	none	-	-	Average (of DGAC and PCC)	0
0+000	2025	Buses	-	1	-		40	none	-	-	Average (of DGAC and PCC)	0
0+000	2025	Motorcycles	-	1	-		40	none	-	-	Average (of DGAC and PCC)	0
0+000	2025	Auxiliary Vehicle	-	-	-		40	none	-	-	Average (of DGAC and PCC)	0
Aerojet Ave NB	Traffic direction:	In entry direction										
5+900	*12150*	*Total*	-	*810*	-	-	*none*	-	-	*Average (of DGAC and PCC)*		*0*
5+900	12150	Automobiles	-	472	-		40	none	-	-	Average (of DGAC and PCC)	0
5+900	12150	Medium trucks	-	289	-		40	none	-	-	Average (of DGAC and PCC)	0
5+900	12150	Heavy trucks	-	38	-		40	none	-	-	Average (of DGAC and PCC)	0
5+900	12150	Buses	-	6	-		40	none	-	-	Average (of DGAC and PCC)	0
5+900	12150	Motorcycles	-	5	-		40	none	-	-	Average (of DGAC and PCC)	0
5+900	12150	Auxiliary Vehicle	-	-	-		40	none	-	-	Average (of DGAC and PCC)	0
6+310	-						-	-	-	-		-
0+000	*18015*	*Total*	-	*1201*	-	-	*none*	-	-	*Average (of DGAC and PCC)*		*0*
0+000	18015	Automobiles	-	701	-		40	none	-	-	Average (of DGAC and PCC)	0
0+000	18015	Medium trucks	-	428	-		40	none	-	-	Average (of DGAC and PCC)	0
0+000	18015	Heavy trucks	-	56	-		40	none	-	-	Average (of DGAC and PCC)	0
0+000	18015	Buses	-	8	-		40	none	-	-	Average (of DGAC and PCC)	0
0+000	18015	Motorcycles	-	8	-		40	none	-	-	Average (of DGAC and PCC)	0
0+000	18015	Auxiliary Vehicle	-	-	-		40	none	-	-	Average (of DGAC and PCC)	0
Rio Hondo Ave SB	Traffic direction:	In entry direction										
5+900	*8430*	*Total*	-	*562*	-	-	*none*	-	-	*Average (of DGAC and PCC)*		*0*
5+900	8430	Automobiles	-	327	-		40	none	-	-	Average (of DGAC and PCC)	0
5+900	8430	Medium trucks	-	200	-		40	none	-	-	Average (of DGAC and PCC)	0
5+900	8430	Heavy trucks	-	27	-		40	none	-	-	Average (of DGAC and PCC)	0
5+900	8430	Buses	-	4	-		40	none	-	-	Average (of DGAC and PCC)	0
5+900	8430	Motorcycles	-	4	-		40	none	-	-	Average (of DGAC and PCC)	0
5+900	8430	Auxiliary Vehicle	-	-	-		40	none	-	-	Average (of DGAC and PCC)	0
6+326	-						-	-	-	-		-
0+000	*540*	*Total*	-	*36*	-	-	*none*	-	-	*Average (of DGAC and PCC)*		*0*
0+000	540	Automobiles	-	20	-		40	none	-	-	Average (of DGAC and PCC)	0
0+000	540	Medium trucks	-	12	-		40	none	-	-	Average (of DGAC and PCC)	0
0+000	540	Heavy trucks	-	2	-		40	none	-	-	Average (of DGAC and PCC)	0
0+000	540	Buses	-	1	-		40	none	-	-	Average (of DGAC and PCC)	0

0+000		540	Motorcycles	-		1	-		40	none	-	-	Average (of DGAC and PCC)	0
0+000		540	Auxiliary Vehicle	-	-	-			40	none	-	-	Average (of DGAC and PCC)	0
Rio Hondo Ave NB	Traffic direction:	In entry direction												
5+900		*20910*	*Total*	-		*1394*	-	-		*none*	-	-	*Average (of DGAC and PCC)*	*0*
5+900		20910	Automobiles	-		813	-		40	none	-	-	Average (of DGAC and PCC)	0
5+900		20910	Medium trucks	-		497	-		40	none	-	-	Average (of DGAC and PCC)	0
5+900		20910	Heavy trucks	-		65	-		40	none	-	-	Average (of DGAC and PCC)	0
5+900		20910	Buses	-		10	-		40	none	-	-	Average (of DGAC and PCC)	0
5+900		20910	Motorcycles	-		9	-		40	none	-	-	Average (of DGAC and PCC)	0
5+900		20910	Auxiliary Vehicle	-	-	-			40	none	-	-	Average (of DGAC and PCC)	0
6+319	-									-	-	-	-	-
0+000	-									-	-	-	-	0
Fletcher Ave SB	Traffic direction:	In entry direction												
6+319		*1800*	*Total*	-		*120*	-	-		*none*	-	-	*Average (of DGAC and PCC)*	*0*
6+319		1800	Automobiles	-		69	-		40	none	-	-	Average (of DGAC and PCC)	0
6+319		1800	Medium trucks	-		43	-		40	none	-	-	Average (of DGAC and PCC)	0
6+319		1800	Heavy trucks	-		6	-		40	none	-	-	Average (of DGAC and PCC)	0
6+319		1800	Buses	-		1	-		40	none	-	-	Average (of DGAC and PCC)	0
6+319		1800	Motorcycles	-		1	-		40	none	-	-	Average (of DGAC and PCC)	0
6+319		1800	Auxiliary Vehicle	-	-	-			40	none	-	-	Average (of DGAC and PCC)	0
6+700	-									-	-	-	-	-
0+000		*1020*	*Total*	-		*68*	-	-		*none*	-	-	*Average (of DGAC and PCC)*	*0*
0+000		1020	Automobiles	-		38	-		40	none	-	-	Average (of DGAC and PCC)	0
0+000		1020	Medium trucks	-		24	-		40	none	-	-	Average (of DGAC and PCC)	0
0+000		1020	Heavy trucks	-		4	-		40	none	-	-	Average (of DGAC and PCC)	0
0+000		1020	Buses	-		1	-		40	none	-	-	Average (of DGAC and PCC)	0
0+000		1020	Motorcycles	-		1	-		40	none	-	-	Average (of DGAC and PCC)	0
0+000		1020	Auxiliary Vehicle	-	-	-			40	none	-	-	Average (of DGAC and PCC)	0
Fletcher Ave NB	Traffic direction:	In entry direction												
6+319		*2025*	*Total*	-		*135*	-	-		*none*	-	-	*Average (of DGAC and PCC)*	*0*
6+319		2025	Automobiles	-		78	-		40	none	-	-	Average (of DGAC and PCC)	0
6+319		2025	Medium trucks	-		48	-		40	none	-	-	Average (of DGAC and PCC)	0
6+319		2025	Heavy trucks	-		7	-		40	none	-	-	Average (of DGAC and PCC)	0
6+319		2025	Buses	-		1	-		40	none	-	-	Average (of DGAC and PCC)	0
6+319		2025	Motorcycles	-		1	-		40	none	-	-	Average (of DGAC and PCC)	0
6+319		2025	Auxiliary Vehicle	-	-	-			40	none	-	-	Average (of DGAC and PCC)	0
6+694	-									-	-	-	-	-
0+000	-									-	-	-	-	0
Flair Dr EB	Traffic direction:	In entry direction												
6+319		*13665*	*Total*	-		*911*	-	-		*none*	-	-	*Average (of DGAC and PCC)*	*0*
6+319		13665	Automobiles	-		531	-		40	none	-	-	Average (of DGAC and PCC)	0
6+319		13665	Medium trucks	-		325	-		40	none	-	-	Average (of DGAC and PCC)	0
6+319		13665	Heavy trucks	-		43	-		40	none	-	-	Average (of DGAC and PCC)	0
6+319		13665	Buses	-		6	-		40	none	-	-	Average (of DGAC and PCC)	0
6+319		13665	Motorcycles	-		6	-		40	none	-	-	Average (of DGAC and PCC)	0
6+319		13665	Auxiliary Vehicle	-	-	-			40	none	-	-	Average (of DGAC and PCC)	0
6+832		*16245*	*Total*	-		*1083*	-	-		*none*	-	-	*Average (of DGAC and PCC)*	*0*
6+832		16245	Automobiles	-		631	-		40	none	-	-	Average (of DGAC and PCC)	0
6+832		16245	Medium trucks	-		386	-		40	none	-	-	Average (of DGAC and PCC)	0
6+832		16245	Heavy trucks	-		51	-		40	none	-	-	Average (of DGAC and PCC)	0
6+832		16245	Buses	-		8	-		40	none	-	-	Average (of DGAC and PCC)	0
6+832		16245	Motorcycles	-		7	-		40	none	-	-	Average (of DGAC and PCC)	0
6+832		16245	Auxiliary Vehicle	-	-	-			40	none	-	-	Average (of DGAC and PCC)	0
7+320		*14955*	*Total*	-		*997*	-	-		*none*	-	-	*Average (of DGAC and PCC)*	*0*
7+320		14955	Automobiles	-		581	-		40	none	-	-	Average (of DGAC and PCC)	0
7+320		14955	Medium trucks	-		355	-		40	none	-	-	Average (of DGAC and PCC)	0
7+320		14955	Heavy trucks	-		47	-		40	none	-	-	Average (of DGAC and PCC)	0
7+320		14955	Buses	-		7	-		40	none	-	-	Average (of DGAC and PCC)	0
7+320		14955	Motorcycles	-		7	-		40	none	-	-	Average (of DGAC and PCC)	0
7+320		14955	Auxiliary Vehicle	-	-	-			40	none	-	-	Average (of DGAC and PCC)	0
7+670		*20220*	*Total*	-		*1348*	-	-		*none*	-	-	*Average (of DGAC and PCC)*	*0*

7+670		20220	Automobiles	-		787	-		40	none	-	-	Average (of DGAC and PCC)	0
7+670		20220	Medium trucks	-		480	-		40	none	-	-	Average (of DGAC and PCC)	0
7+670		20220	Heavy trucks	-		63	-		40	none	-	-	Average (of DGAC and PCC)	0
7+670		20220	Buses	-		9	-		40	none	-	-	Average (of DGAC and PCC)	0
7+670		20220	Motorcycles	-		9	-		40	none	-	-	Average (of DGAC and PCC)	0
7+670		20220	Auxiliary Vehicle	-	-	-			40	none	-	-	Average (of DGAC and PCC)	0
8+052	-									-	-	-	-	-
0+000	-									-	-	-	-	0
Flair Dr WB	Traffic direction:	In entry direction												
6+319		*22470*	*Total*	-		*1498*	-	-		*none*	-	-	*Average (of DGAC and PCC)*	*0*
6+319		22470	Automobiles	-		874	-		40	none	-	-	Average (of DGAC and PCC)	0
6+319		22470	Medium trucks	-		534	-		40	none	-	-	Average (of DGAC and PCC)	0
6+319		22470	Heavy trucks	-		70	-		40	none	-	-	Average (of DGAC and PCC)	0
6+319		22470	Buses	-		10	-		40	none	-	-	Average (of DGAC and PCC)	0
6+319		22470	Motorcycles	-		10	-		40	none	-	-	Average (of DGAC and PCC)	0
6+319		22470	Auxiliary Vehicle	-	-	-			40	none	-	-	Average (of DGAC and PCC)	0
6+700		*15450*	*Total*	-		*1030*	-	-		*none*	-	-	*Average (of DGAC and PCC)*	*0*
6+700		15450	Automobiles	-		601	-		40	none	-	-	Average (of DGAC and PCC)	0
6+700		15450	Medium trucks	-		367	-		40	none	-	-	Average (of DGAC and PCC)	0
6+700		15450	Heavy trucks	-		48	-		40	none	-	-	Average (of DGAC and PCC)	0
6+700		15450	Buses	-		7	-		40	none	-	-	Average (of DGAC and PCC)	0
6+700		15450	Motorcycles	-		7	-		40	none	-	-	Average (of DGAC and PCC)	0
6+700		15450	Auxiliary Vehicle	-	-	-			40	none	-	-	Average (of DGAC and PCC)	0
7+045		*14775*	*Total*	-		*985*	-	-		*none*	-	-	*Average (of DGAC and PCC)*	*0*
7+045		14775	Automobiles	-		574	-		40	none	-	-	Average (of DGAC and PCC)	0
7+045		14775	Medium trucks	-		351	-		40	none	-	-	Average (of DGAC and PCC)	0
7+045		14775	Heavy trucks	-		46	-		40	none	-	-	Average (of DGAC and PCC)	0
7+045		14775	Buses	-		7	-		40	none	-	-	Average (of DGAC and PCC)	0
7+045		14775	Motorcycles	-		7	-		40	none	-	-	Average (of DGAC and PCC)	0
7+045		14775	Auxiliary Vehicle	-	-	-			40	none	-	-	Average (of DGAC and PCC)	0
7+523		*11865*	*Total*	-		*791*	-	-		*none*	-	-	*Average (of DGAC and PCC)*	*0*
7+523		11865	Automobiles	-		461	-		40	none	-	-	Average (of DGAC and PCC)	0
7+523		11865	Medium trucks	-		282	-		40	none	-	-	Average (of DGAC and PCC)	0
7+523		11865	Heavy trucks	-		37	-		40	none	-	-	Average (of DGAC and PCC)	0
7+523		11865	Buses	-		6	-		40	none	-	-	Average (of DGAC and PCC)	0
7+523		11865	Motorcycles	-		5	-		40	none	-	-	Average (of DGAC and PCC)	0
7+523		11865	Auxiliary Vehicle	-	-	-			40	none	-	-	Average (of DGAC and PCC)	0
8+048	-									-	-	-	-	-
0+000		*4695*	*Total*	-		*313*	-	-		*none*	-	-	*Average (of DGAC and PCC)*	*0*
0+000		4695	Automobiles	-		182	-		40	none	-	-	Average (of DGAC and PCC)	0
0+000		4695	Medium trucks	-		111	-		40	none	-	-	Average (of DGAC and PCC)	0
0+000		4695	Heavy trucks	-		15	-		40	none	-	-	Average (of DGAC and PCC)	0
0+000		4695	Buses	-		3	-		40	none	-	-	Average (of DGAC and PCC)	0
0+000		4695	Motorcycles	-		2	-		40	none	-	-	Average (of DGAC and PCC)	0
0+000		4695	Auxiliary Vehicle	-	-	-			40	none	-	-	Average (of DGAC and PCC)	0
Baldwin Ave SB	Traffic direction:	In entry direction												
6+319		*24540*	*Total*	-		*1636*	-	-		*none*	-	-	*Average (of DGAC and PCC)*	*0*
6+319		24540	Automobiles	-		954	-		56	none	-	-	Average (of DGAC and PCC)	0
6+319		24540	Medium trucks	-		583	-		56	none	-	-	Average (of DGAC and PCC)	0
6+319		24540	Heavy trucks	-		77	-		56	none	-	-	Average (of DGAC and PCC)	0
6+319		24540	Buses	-		11	-		56	none	-	-	Average (of DGAC and PCC)	0
6+319		24540	Motorcycles	-		11	-		56	none	-	-	Average (of DGAC and PCC)	0
6+319		24540	Auxiliary Vehicle	-	-	-			56	none	-	-	Average (of DGAC and PCC)	0
6+847		*24540*	*Total*	-		*1636*	-	-		*Traffic light*	*0*	-	*Average (of DGAC and PCC)*	*0*
6+847		24540	Automobiles	-		954	-		56	Traffic light	0	-	Average (of DGAC and PCC)	0
6+847		24540	Medium trucks	-		583	-		56	Traffic light	0	-	Average (of DGAC and PCC)	0
6+847		24540	Heavy trucks	-		77	-		56	Traffic light	0	-	Average (of DGAC and PCC)	0
6+847		24540	Buses	-		11	-		56	Traffic light	0	-	Average (of DGAC and PCC)	0
6+847		24540	Motorcycles	-		11	-		56	Traffic light	0	-	Average (of DGAC and PCC)	0
6+847		24540	Auxiliary Vehicle	-	-	-			56	Traffic light	0	-	Average (of DGAC and PCC)	0
7+957		*24540*	*Total*	-		*1636*	-	-		*none*	-	-	*Average (of DGAC and PCC)*	*0*

7+957	24540	Automobiles	-	954	-	56	none	-	-	Average (of DGAC and PCC)	0
7+957	24540	Medium trucks	-	583	-	56	none	-	-	Average (of DGAC and PCC)	0
7+957	24540	Heavy trucks	-	77	-	56	none	-	-	Average (of DGAC and PCC)	0
7+957	24540	Buses	-	11	-	56	none	-	-	Average (of DGAC and PCC)	0
7+957	24540	Motorcycles	-	11	-	56	none	-	-	Average (of DGAC and PCC)	0
7+957	24540	Auxiliary Vehicle	-	-	-	56	none	-	-	Average (of DGAC and PCC)	0
8+011	*24540*	*Total*	-	*1636*	-	-	*none*	-	-	*Average (of DGAC and PCC)*	*0*
8+011	24540	Automobiles	-	954	-	56	none	-	-	Average (of DGAC and PCC)	0
8+011	24540	Medium trucks	-	583	-	56	none	-	-	Average (of DGAC and PCC)	0
8+011	24540	Heavy trucks	-	77	-	56	none	-	-	Average (of DGAC and PCC)	0
8+011	24540	Buses	-	11	-	56	none	-	-	Average (of DGAC and PCC)	0
8+011	24540	Motorcycles	-	11	-	56	none	-	-	Average (of DGAC and PCC)	0
8+011	24540	Auxiliary Vehicle	-	-	-	56	none	-	-	Average (of DGAC and PCC)	0
8+175	*32160*	*Total*	-	*2144*	-	-	*Traffic light*	*0*	-	*Average (of DGAC and PCC)*	*0*
8+175	32160	Automobiles	-	1251	-	56	Traffic light	0	-	Average (of DGAC and PCC)	0
8+175	32160	Medium trucks	-	764	-	56	Traffic light	0	-	Average (of DGAC and PCC)	0
8+175	32160	Heavy trucks	-	100	-	56	Traffic light	0	-	Average (of DGAC and PCC)	0
8+175	32160	Buses	-	15	-	56	Traffic light	0	-	Average (of DGAC and PCC)	0
8+175	32160	Motorcycles	-	14	-	56	Traffic light	0	-	Average (of DGAC and PCC)	0
8+175	32160	Auxiliary Vehicle	-	-	-	56	Traffic light	0	-	Average (of DGAC and PCC)	0
8+855	*32160*	*Total*	-	*2144*	-	-	*none*	-	-	*Average (of DGAC and PCC)*	*0*
8+855	32160	Automobiles	-	1251	-	56	none	-	-	Average (of DGAC and PCC)	0
8+855	32160	Medium trucks	-	764	-	56	none	-	-	Average (of DGAC and PCC)	0
8+855	32160	Heavy trucks	-	100	-	56	none	-	-	Average (of DGAC and PCC)	0
8+855	32160	Buses	-	15	-	56	none	-	-	Average (of DGAC and PCC)	0
8+855	32160	Motorcycles	-	14	-	56	none	-	-	Average (of DGAC and PCC)	0
8+855	32160	Auxiliary Vehicle	-	-	-	56	none	-	-	Average (of DGAC and PCC)	0
9+025	*32160*	*Total*	-	*2144*	-	-	*none*	-	-	*Average (of DGAC and PCC)*	*0*
9+025	32160	Automobiles	-	1251	-	56	none	-	-	Average (of DGAC and PCC)	0
9+025	32160	Medium trucks	-	764	-	56	none	-	-	Average (of DGAC and PCC)	0
9+025	32160	Heavy trucks	-	100	-	56	none	-	-	Average (of DGAC and PCC)	0
9+025	32160	Buses	-	15	-	56	none	-	-	Average (of DGAC and PCC)	0
9+025	32160	Motorcycles	-	14	-	56	none	-	-	Average (of DGAC and PCC)	0
9+025	32160	Auxiliary Vehicle	-	-	-	56	none	-	-	Average (of DGAC and PCC)	0
9+803	*34950*	*Total*	-	*2330*	-	-	*Traffic light*	*0*	-	*Average (of DGAC and PCC)*	*0*
9+803	34950	Automobiles	-	1360	-	56	Traffic light	0	-	Average (of DGAC and PCC)	0
9+803	34950	Medium trucks	-	830	-	56	Traffic light	0	-	Average (of DGAC and PCC)	0
9+803	34950	Heavy trucks	-	109	-	56	Traffic light	0	-	Average (of DGAC and PCC)	0
9+803	34950	Buses	-	16	-	56	Traffic light	0	-	Average (of DGAC and PCC)	0
9+803	34950	Motorcycles	-	15	-	56	Traffic light	0	-	Average (of DGAC and PCC)	0
9+803	34950	Auxiliary Vehicle	-	-	-	56	Traffic light	0	-	Average (of DGAC and PCC)	0
10+141	*34950*	*Total*	-	*2330*	-	-	*none*	-	-	*Average (of DGAC and PCC)*	*0*
10+141	34950	Automobiles	-	1360	-	56	none	-	-	Average (of DGAC and PCC)	0
10+141	34950	Medium trucks	-	830	-	56	none	-	-	Average (of DGAC and PCC)	0
10+141	34950	Heavy trucks	-	109	-	56	none	-	-	Average (of DGAC and PCC)	0
10+141	34950	Buses	-	16	-	56	none	-	-	Average (of DGAC and PCC)	0
10+141	34950	Motorcycles	-	15	-	56	none	-	-	Average (of DGAC and PCC)	0
10+141	34950	Auxiliary Vehicle	-	-	-	56	none	-	-	Average (of DGAC and PCC)	0
10+389	*41085*	*Total*	-	*2739*	-	-	*Traffic light*	*0*	-	*Average (of DGAC and PCC)*	*0*
10+389	41085	Automobiles	-	1599	-	56	Traffic light	0	-	Average (of DGAC and PCC)	0
10+389	41085	Medium trucks	-	976	-	56	Traffic light	0	-	Average (of DGAC and PCC)	0
10+389	41085	Heavy trucks	-	128	-	56	Traffic light	0	-	Average (of DGAC and PCC)	0
10+389	41085	Buses	-	19	-	56	Traffic light	0	-	Average (of DGAC and PCC)	0
10+389	41085	Motorcycles	-	17	-	56	Traffic light	0	-	Average (of DGAC and PCC)	0
10+389	41085	Auxiliary Vehicle	-	-	-	56	Traffic light	0	-	Average (of DGAC and PCC)	0
10+780	-						-	-	-	-	-
0+000	*34860*	*Total*	-	*2324*	-	-	*Traffic light*	*0*	-	*Average (of DGAC and PCC)*	*0*
0+000	34860	Automobiles	-	1356	-	56	Traffic light	0	-	Average (of DGAC and PCC)	0
0+000	34860	Medium trucks	-	828	-	56	Traffic light	0	-	Average (of DGAC and PCC)	0
0+000	34860	Heavy trucks	-	109	-	56	Traffic light	0	-	Average (of DGAC and PCC)	0
0+000	34860	Buses	-	16	-	56	Traffic light	0	-	Average (of DGAC and PCC)	0

0+000	34860	Motorcycles	-		15	-		56	Traffic light	0	-	Average (of DGAC and PCC)	0
0+000	34860	Auxiliary Vehicle	-	-	-			56	Traffic light	0	-	Average (of DGAC and PCC)	0
Baldwin Ave NB	Traffic direction:	In entry direction											
10+389	*41760*	*Total*	-		*2784*	-	-		*Traffic light*	*0*	-	*Average (of DGAC and PCC)*	*0*
10+389	41760	Automobiles	-		1625	-		56	Traffic light	0	-	Average (of DGAC and PCC)	0
10+389	41760	Medium trucks	-		992	-		56	Traffic light	0	-	Average (of DGAC and PCC)	0
10+389	41760	Heavy trucks	-		130	-		56	Traffic light	0	-	Average (of DGAC and PCC)	0
10+389	41760	Buses	-		19	-		56	Traffic light	0	-	Average (of DGAC and PCC)	0
10+389	41760	Motorcycles	-		18	-		56	Traffic light	0	-	Average (of DGAC and PCC)	0
10+389	41760	Auxiliary Vehicle	-	-	-			56	Traffic light	0	-	Average (of DGAC and PCC)	0
10+776	*33420*	*Total*	-		*2228*	-	-		*none*	-	-	*Average (of DGAC and PCC)*	*0*
10+776	33420	Automobiles	-		1301	-		40	none	-	-	Average (of DGAC and PCC)	0
10+776	33420	Medium trucks	-		794	-		40	none	-	-	Average (of DGAC and PCC)	0
10+776	33420	Heavy trucks	-		104	-		40	none	-	-	Average (of DGAC and PCC)	0
10+776	33420	Buses	-		15	-		40	none	-	-	Average (of DGAC and PCC)	0
10+776	33420	Motorcycles	-		14	-		40	none	-	-	Average (of DGAC and PCC)	0
10+776	33420	Auxiliary Vehicle	-	-	-			40	none	-	-	Average (of DGAC and PCC)	0
11+023	*33420*	*Total*	-		*2228*	-	-		*none*	-	-	*Average (of DGAC and PCC)*	*0*
11+023	33420	Automobiles	-		1301	-		56	none	-	-	Average (of DGAC and PCC)	0
11+023	33420	Medium trucks	-		794	-		56	none	-	-	Average (of DGAC and PCC)	0
11+023	33420	Heavy trucks	-		104	-		56	none	-	-	Average (of DGAC and PCC)	0
11+023	33420	Buses	-		15	-		56	none	-	-	Average (of DGAC and PCC)	0
11+023	33420	Motorcycles	-		14	-		56	none	-	-	Average (of DGAC and PCC)	0
11+023	33420	Auxiliary Vehicle	-	-	-			56	none	-	-	Average (of DGAC and PCC)	0
11+338	*31185*	*Total*	-		*2079*	-	-		*Traffic light*	*0*	-	*Average (of DGAC and PCC)*	*0*
11+338	31185	Automobiles	-		1214	-		56	Traffic light	0	-	Average (of DGAC and PCC)	0
11+338	31185	Medium trucks	-		741	-		56	Traffic light	0	-	Average (of DGAC and PCC)	0
11+338	31185	Heavy trucks	-		97	-		56	Traffic light	0	-	Average (of DGAC and PCC)	0
11+338	31185	Buses	-		14	-		56	Traffic light	0	-	Average (of DGAC and PCC)	0
11+338	31185	Motorcycles	-		13	-		56	Traffic light	0	-	Average (of DGAC and PCC)	0
11+338	31185	Auxiliary Vehicle	-	-	-			56	Traffic light	0	-	Average (of DGAC and PCC)	0
12+138	*31185*	*Total*	-		*2079*	-	-		*none*	-	-	*Average (of DGAC and PCC)*	*0*
12+138	31185	Automobiles	-		1214	-		56	none	-	-	Average (of DGAC and PCC)	0
12+138	31185	Medium trucks	-		741	-		56	none	-	-	Average (of DGAC and PCC)	0
12+138	31185	Heavy trucks	-		97	-		56	none	-	-	Average (of DGAC and PCC)	0
12+138	31185	Buses	-		14	-		56	none	-	-	Average (of DGAC and PCC)	0
12+138	31185	Motorcycles	-		13	-		56	none	-	-	Average (of DGAC and PCC)	0
12+138	31185	Auxiliary Vehicle	-	-	-			56	none	-	-	Average (of DGAC and PCC)	0
12+310	*31185*	*Total*	-		*2079*	-	-		*none*	-	-	*Average (of DGAC and PCC)*	*0*
12+310	31185	Automobiles	-		1214	-		56	none	-	-	Average (of DGAC and PCC)	0
12+310	31185	Medium trucks	-		741	-		56	none	-	-	Average (of DGAC and PCC)	0
12+310	31185	Heavy trucks	-		97	-		56	none	-	-	Average (of DGAC and PCC)	0
12+310	31185	Buses	-		14	-		56	none	-	-	Average (of DGAC and PCC)	0
12+310	31185	Motorcycles	-		13	-		56	none	-	-	Average (of DGAC and PCC)	0
12+310	31185	Auxiliary Vehicle	-	-	-			56	none	-	-	Average (of DGAC and PCC)	0
13+023	*34155*	*Total*	-		*2277*	-	-		*Traffic light*	*0*	-	*Average (of DGAC and PCC)*	*0*
13+023	34155	Automobiles	-		1329	-		56	Traffic light	0	-	Average (of DGAC and PCC)	0
13+023	34155	Medium trucks	-		811	-		56	Traffic light	0	-	Average (of DGAC and PCC)	0
13+023	34155	Heavy trucks	-		107	-		56	Traffic light	0	-	Average (of DGAC and PCC)	0
13+023	34155	Buses	-		15	-		56	Traffic light	0	-	Average (of DGAC and PCC)	0
13+023	34155	Motorcycles	-		15	-		56	Traffic light	0	-	Average (of DGAC and PCC)	0
13+023	34155	Auxiliary Vehicle	-	-	-			56	Traffic light	0	-	Average (of DGAC and PCC)	0
13+151	*34155*	*Total*	-		*2277*	-	-		*none*	-	-	*Average (of DGAC and PCC)*	*0*
13+151	34155	Automobiles	-		1329	-		56	none	-	-	Average (of DGAC and PCC)	0
13+151	34155	Medium trucks	-		811	-		56	none	-	-	Average (of DGAC and PCC)	0
13+151	34155	Heavy trucks	-		107	-		56	none	-	-	Average (of DGAC and PCC)	0
13+151	34155	Buses	-		15	-		56	none	-	-	Average (of DGAC and PCC)	0
13+151	34155	Motorcycles	-		15	-		56	none	-	-	Average (of DGAC and PCC)	0
13+151	34155	Auxiliary Vehicle	-	-	-			56	none	-	-	Average (of DGAC and PCC)	0
14+319	*26595*	*Total*	-		*1773*	-	-		*Traffic light*	*0*	-	*Average (of DGAC and PCC)*	*0*
14+319	26595	Automobiles	-		1035	-		56	Traffic light	0	-	Average (of DGAC and PCC)	0

14+319		26595	Medium trucks	-		632	-		56	Traffic light	0	-	Average (of DGAC and PCC)	0
14+319		26595	Heavy trucks	-		83	-		56	Traffic light	0	-	Average (of DGAC and PCC)	0
14+319		26595	Buses	-		12	-		56	Traffic light	0	-	Average (of DGAC and PCC)	0
14+319		26595	Motorcycles	-		11	-		56	Traffic light	0	-	Average (of DGAC and PCC)	0
14+319		26595	Auxiliary Vehicle	-	-	-			56	Traffic light	0	-	Average (of DGAC and PCC)	0
14+849	-									-	-	-	-	-
0+000		*26595*	*Total*	-		*1773*	-	-		*none*	-	-	*Average (of DGAC and PCC)*	*0*
0+000		26595	Automobiles	-		1035	-		56	none	-	-	Average (of DGAC and PCC)	0
0+000		26595	Medium trucks	-		632	-		56	none	-	-	Average (of DGAC and PCC)	0
0+000		26595	Heavy trucks	-		83	-		56	none	-	-	Average (of DGAC and PCC)	0
0+000		26595	Buses	-		12	-		56	none	-	-	Average (of DGAC and PCC)	0
0+000		26595	Motorcycles	-		11	-		56	none	-	-	Average (of DGAC and PCC)	0
0+000		26595	Auxiliary Vehicle	-	-	-			56	none	-	-	Average (of DGAC and PCC)	0
Olive St EB	Traffic direction:	In entry direction												
8+855		*4800*	*Total*	-		*320*	-	-		*none*	-	-	*Average (of DGAC and PCC)*	*0*
8+855		4800	Automobiles	-		186	-		40	none	-	-	Average (of DGAC and PCC)	0
8+855		4800	Medium trucks	-		114	-		40	none	-	-	Average (of DGAC and PCC)	0
8+855		4800	Heavy trucks	-		15	-		40	none	-	-	Average (of DGAC and PCC)	0
8+855		4800	Buses	-		3	-		40	none	-	-	Average (of DGAC and PCC)	0
8+855		4800	Motorcycles	-		2	-		40	none	-	-	Average (of DGAC and PCC)	0
8+855		4800	Auxiliary Vehicle	-	-	-			40	none	-	-	Average (of DGAC and PCC)	0
9+518		*4800*	*Total*	-		*320*	-	-		*Traffic light*	*0*	-	*Average (of DGAC and PCC)*	*0*
9+518		4800	Automobiles	-		186	-		40	Traffic light	0	-	Average (of DGAC and PCC)	0
9+518		4800	Medium trucks	-		114	-		40	Traffic light	0	-	Average (of DGAC and PCC)	0
9+518		4800	Heavy trucks	-		15	-		40	Traffic light	0	-	Average (of DGAC and PCC)	0
9+518		4800	Buses	-		3	-		40	Traffic light	0	-	Average (of DGAC and PCC)	0
9+518		4800	Motorcycles	-		2	-		40	Traffic light	0	-	Average (of DGAC and PCC)	0
9+518		4800	Auxiliary Vehicle	-	-	-			40	Traffic light	0	-	Average (of DGAC and PCC)	0
10+058	-									-	-	-	-	-
0+000		*4800*	*Total*	-		*320*	-	-		*none*	-	-	*Average (of DGAC and PCC)*	*0*
0+000		4800	Automobiles	-		186	-		40	none	-	-	Average (of DGAC and PCC)	0
0+000		4800	Medium trucks	-		114	-		40	none	-	-	Average (of DGAC and PCC)	0
0+000		4800	Heavy trucks	-		15	-		40	none	-	-	Average (of DGAC and PCC)	0
0+000		4800	Buses	-		3	-		40	none	-	-	Average (of DGAC and PCC)	0
0+000		4800	Motorcycles	-		2	-		40	none	-	-	Average (of DGAC and PCC)	0
0+000		4800	Auxiliary Vehicle	-	-	-			40	none	-	-	Average (of DGAC and PCC)	0
Olive St WB	Traffic direction:	In entry direction												
8+855		*4365*	*Total*	-		*291*	-	-		*none*	-	-	*Average (of DGAC and PCC)*	*0*
8+855		4365	Automobiles	-		169	-		40	none	-	-	Average (of DGAC and PCC)	0
8+855		4365	Medium trucks	-		104	-		40	none	-	-	Average (of DGAC and PCC)	0
8+855		4365	Heavy trucks	-		14	-		40	none	-	-	Average (of DGAC and PCC)	0
8+855		4365	Buses	-		2	-		40	none	-	-	Average (of DGAC and PCC)	0
8+855		4365	Motorcycles	-		2	-		40	none	-	-	Average (of DGAC and PCC)	0
8+855		4365	Auxiliary Vehicle	-	-	-			40	none	-	-	Average (of DGAC and PCC)	0
9+385		*4365*	*Total*	-		*291*	-	-		*Traffic light*	*0*	-	*Average (of DGAC and PCC)*	*0*
9+385		4365	Automobiles	-		169	-		40	Traffic light	0	-	Average (of DGAC and PCC)	0
9+385		4365	Medium trucks	-		104	-		40	Traffic light	0	-	Average (of DGAC and PCC)	0
9+385		4365	Heavy trucks	-		14	-		40	Traffic light	0	-	Average (of DGAC and PCC)	0
9+385		4365	Buses	-		2	-		40	Traffic light	0	-	Average (of DGAC and PCC)	0
9+385		4365	Motorcycles	-		2	-		40	Traffic light	0	-	Average (of DGAC and PCC)	0
9+385		4365	Auxiliary Vehicle	-	-	-			40	Traffic light	0	-	Average (of DGAC and PCC)	0
10+062	-									-	-	-	-	-
0+000		*4365*	*Total*	-		*291*	-	-		*none*	-	-	*Average (of DGAC and PCC)*	*0*
0+000		4365	Automobiles	-		169	-		40	none	-	-	Average (of DGAC and PCC)	0
0+000		4365	Medium trucks	-		104	-		40	none	-	-	Average (of DGAC and PCC)	0
0+000		4365	Heavy trucks	-		14	-		40	none	-	-	Average (of DGAC and PCC)	0
0+000		4365	Buses	-		2	-		40	none	-	-	Average (of DGAC and PCC)	0
0+000		4365	Motorcycles	-		2	-		40	none	-	-	Average (of DGAC and PCC)	0
0+000		4365	Auxiliary Vehicle	-	-	-			40	none	-	-	Average (of DGAC and PCC)	0
Lower Azusa Rd EB	Traffic direction:	In entry direction												
8+855		*22320*	*Total*	-		*1488*	-	-		*none*	-	-	*Average (of DGAC and PCC)*	*0*

8+855	22320	Automobiles	-		868	-		56	none	-	-	Average (of DGAC and PCC)	0
8+855	22320	Medium trucks	-		530	-		56	none	-	-	Average (of DGAC and PCC)	0
8+855	22320	Heavy trucks	-		70	-		56	none	-	-	Average (of DGAC and PCC)	0
8+855	22320	Buses	-		10	-		56	none	-	-	Average (of DGAC and PCC)	0
8+855	22320	Motorcycles	-		10	-		56	none	-	-	Average (of DGAC and PCC)	0
8+855	22320	Auxiliary Vehicle	-	-	-			56	none	-	-	Average (of DGAC and PCC)	0
8+995	*22320*	*Total*	-		*1488*	-	-		*Traffic light*	*0*	-	*Average (of DGAC and PCC)*	*0*
8+995	22320	Automobiles	-		868	-		56	Traffic light	0	-	Average (of DGAC and PCC)	0
8+995	22320	Medium trucks	-		530	-		56	Traffic light	0	-	Average (of DGAC and PCC)	0
8+995	22320	Heavy trucks	-		70	-		56	Traffic light	0	-	Average (of DGAC and PCC)	0
8+995	22320	Buses	-		10	-		56	Traffic light	0	-	Average (of DGAC and PCC)	0
8+995	22320	Motorcycles	-		10	-		56	Traffic light	0	-	Average (of DGAC and PCC)	0
8+995	22320	Auxiliary Vehicle	-	-	-			56	Traffic light	0	-	Average (of DGAC and PCC)	0
10+849	*28215*	*Total*	-		*1881*	-	-		*Traffic light*	*0*	-	*Average (of DGAC and PCC)*	*0*
10+849	28215	Automobiles	-		1098	-		56	Traffic light	0	-	Average (of DGAC and PCC)	0
10+849	28215	Medium trucks	-		670	-		56	Traffic light	0	-	Average (of DGAC and PCC)	0
10+849	28215	Heavy trucks	-		88	-		56	Traffic light	0	-	Average (of DGAC and PCC)	0
10+849	28215	Buses	-		13	-		56	Traffic light	0	-	Average (of DGAC and PCC)	0
10+849	28215	Motorcycles	-		12	-		56	Traffic light	0	-	Average (of DGAC and PCC)	0
10+849	28215	Auxiliary Vehicle	-	-	-			56	Traffic light	0	-	Average (of DGAC and PCC)	0
11+858	*35595*	*Total*	-		*2373*	-	-		*Traffic light*	*0*	-	*Average (of DGAC and PCC)*	*0*
11+858	35595	Automobiles	-		1385	-		56	Traffic light	0	-	Average (of DGAC and PCC)	0
11+858	35595	Medium trucks	-		846	-		56	Traffic light	0	-	Average (of DGAC and PCC)	0
11+858	35595	Heavy trucks	-		111	-		56	Traffic light	0	-	Average (of DGAC and PCC)	0
11+858	35595	Buses	-		16	-		56	Traffic light	0	-	Average (of DGAC and PCC)	0
11+858	35595	Motorcycles	-		15	-		56	Traffic light	0	-	Average (of DGAC and PCC)	0
11+858	35595	Auxiliary Vehicle	-	-	-			56	Traffic light	0	-	Average (of DGAC and PCC)	0
13+557	*35595*	*Total*	-		*2373*	-	-		*none*	-	-	*Average (of DGAC and PCC)*	*0*
13+557	35595	Automobiles	-		1385	-		56	none	-	-	Average (of DGAC and PCC)	0
13+557	35595	Medium trucks	-		846	-		56	none	-	-	Average (of DGAC and PCC)	0
13+557	35595	Heavy trucks	-		111	-		56	none	-	-	Average (of DGAC and PCC)	0
13+557	35595	Buses	-		16	-		56	none	-	-	Average (of DGAC and PCC)	0
13+557	35595	Motorcycles	-		15	-		56	none	-	-	Average (of DGAC and PCC)	0
13+557	35595	Auxiliary Vehicle	-	-	-			56	none	-	-	Average (of DGAC and PCC)	0
14+452	*33990*	*Total*	-		*2266*	-	-		*Traffic light*	*0*	-	*Average (of DGAC and PCC)*	*0*
14+452	33990	Automobiles	-		1323	-		56	Traffic light	0	-	Average (of DGAC and PCC)	0
14+452	33990	Medium trucks	-		808	-		56	Traffic light	0	-	Average (of DGAC and PCC)	0
14+452	33990	Heavy trucks	-		106	-		56	Traffic light	0	-	Average (of DGAC and PCC)	0
14+452	33990	Buses	-		15	-		56	Traffic light	0	-	Average (of DGAC and PCC)	0
14+452	33990	Motorcycles	-		14	-		56	Traffic light	0	-	Average (of DGAC and PCC)	0
14+452	33990	Auxiliary Vehicle	-	-	-			56	Traffic light	0	-	Average (of DGAC and PCC)	0
15+825	*32220*	*Total*	-		*2148*	-	-		*Traffic light*	*0*	-	*Average (of DGAC and PCC)*	*0*
15+825	32220	Automobiles	-		1253	-		56	Traffic light	0	-	Average (of DGAC and PCC)	0
15+825	32220	Medium trucks	-		765	-		56	Traffic light	0	-	Average (of DGAC and PCC)	0
15+825	32220	Heavy trucks	-		101	-		56	Traffic light	0	-	Average (of DGAC and PCC)	0
15+825	32220	Buses	-		15	-		56	Traffic light	0	-	Average (of DGAC and PCC)	0
15+825	32220	Motorcycles	-		14	-		56	Traffic light	0	-	Average (of DGAC and PCC)	0
15+825	32220	Auxiliary Vehicle	-	-	-			56	Traffic light	0	-	Average (of DGAC and PCC)	0
16+057	*32220*	*Total*	-		*2148*	-	-		*none*	-	-	*Average (of DGAC and PCC)*	*0*
16+057	32220	Automobiles	-		1253	-		56	none	-	-	Average (of DGAC and PCC)	0
16+057	32220	Medium trucks	-		765	-		56	none	-	-	Average (of DGAC and PCC)	0
16+057	32220	Heavy trucks	-		101	-		56	none	-	-	Average (of DGAC and PCC)	0
16+057	32220	Buses	-		15	-		56	none	-	-	Average (of DGAC and PCC)	0
16+057	32220	Motorcycles	-		14	-		56	none	-	-	Average (of DGAC and PCC)	0
16+057	32220	Auxiliary Vehicle	-	-	-			56	none	-	-	Average (of DGAC and PCC)	0
17+102	*32220*	*Total*	-		*2148*	-	-		*none*	-	-	*Average (of DGAC and PCC)*	*0*
17+102	32220	Automobiles	-		1253	-		56	none	-	-	Average (of DGAC and PCC)	0
17+102	32220	Medium trucks	-		765	-		56	none	-	-	Average (of DGAC and PCC)	0
17+102	32220	Heavy trucks	-		101	-		56	none	-	-	Average (of DGAC and PCC)	0
17+102	32220	Buses	-		15	-		56	none	-	-	Average (of DGAC and PCC)	0
17+102	32220	Motorcycles	-		14	-		56	none	-	-	Average (of DGAC and PCC)	0

17+102	32220	Auxiliary Vehicle	-	-	-	56	none	-	-	Average (of DGAC and PCC)	0
17+399	*37485*	*Total*	-	*2499*	-	-	*Traffic light*	*0*	-	*Average (of DGAC and PCC)*	*0*
17+399	37485	Automobiles	-	1458	-	56	Traffic light	0	-	Average (of DGAC and PCC)	0
17+399	37485	Medium trucks	-	891	-	56	Traffic light	0	-	Average (of DGAC and PCC)	0
17+399	37485	Heavy trucks	-	117	-	56	Traffic light	0	-	Average (of DGAC and PCC)	0
17+399	37485	Buses	-	17	-	56	Traffic light	0	-	Average (of DGAC and PCC)	0
17+399	37485	Motorcycles	-	16	-	56	Traffic light	0	-	Average (of DGAC and PCC)	0
17+399	37485	Auxiliary Vehicle	-	-	-	56	Traffic light	0	-	Average (of DGAC and PCC)	0
17+742	-						-	-	-	-	-
0+000	*37485*	*Total*	-	*2499*	-	-	*none*	-	-	*Average (of DGAC and PCC)*	*0*
0+000	37485	Automobiles	-	1458	-	56	none	-	-	Average (of DGAC and PCC)	0
0+000	37485	Medium trucks	-	891	-	56	none	-	-	Average (of DGAC and PCC)	0
0+000	37485	Heavy trucks	-	117	-	56	none	-	-	Average (of DGAC and PCC)	0
0+000	37485	Buses	-	17	-	56	none	-	-	Average (of DGAC and PCC)	0
0+000	37485	Motorcycles	-	16	-	56	none	-	-	Average (of DGAC and PCC)	0
0+000	37485	Auxiliary Vehicle	-	-	-	56	none	-	-	Average (of DGAC and PCC)	0
Lower Azusa Rd WB	Traffic direction:	In entry direction									
8+855	*32670*	*Total*	-	*2178*	-	-	*none*	-	-	*Average (of DGAC and PCC)*	*0*
8+855	32670	Automobiles	-	1271	-	56	none	-	-	Average (of DGAC and PCC)	0
8+855	32670	Medium trucks	-	776	-	56	none	-	-	Average (of DGAC and PCC)	0
8+855	32670	Heavy trucks	-	102	-	56	none	-	-	Average (of DGAC and PCC)	0
8+855	32670	Buses	-	15	-	56	none	-	-	Average (of DGAC and PCC)	0
8+855	32670	Motorcycles	-	14	-	56	none	-	-	Average (of DGAC and PCC)	0
8+855	32670	Auxiliary Vehicle	-	-	-	56	none	-	-	Average (of DGAC and PCC)	0
9+185	*32670*	*Total*	-	*2178*	-	-	*Traffic light*	*0*	-	*Average (of DGAC and PCC)*	*0*
9+185	32670	Automobiles	-	1271	-	56	Traffic light	0	-	Average (of DGAC and PCC)	0
9+185	32670	Medium trucks	-	776	-	56	Traffic light	0	-	Average (of DGAC and PCC)	0
9+185	32670	Heavy trucks	-	102	-	56	Traffic light	0	-	Average (of DGAC and PCC)	0
9+185	32670	Buses	-	15	-	56	Traffic light	0	-	Average (of DGAC and PCC)	0
9+185	32670	Motorcycles	-	14	-	56	Traffic light	0	-	Average (of DGAC and PCC)	0
9+185	32670	Auxiliary Vehicle	-	-	-	56	Traffic light	0	-	Average (of DGAC and PCC)	0
9+375	*32670*	*Total*	-	*2178*	-	-	*none*	-	-	*Average (of DGAC and PCC)*	*0*
9+375	32670	Automobiles	-	1271	-	56	none	-	-	Average (of DGAC and PCC)	0
9+375	32670	Medium trucks	-	776	-	56	none	-	-	Average (of DGAC and PCC)	0
9+375	32670	Heavy trucks	-	102	-	56	none	-	-	Average (of DGAC and PCC)	0
9+375	32670	Buses	-	15	-	56	none	-	-	Average (of DGAC and PCC)	0
9+375	32670	Motorcycles	-	14	-	56	none	-	-	Average (of DGAC and PCC)	0
9+375	32670	Auxiliary Vehicle	-	-	-	56	none	-	-	Average (of DGAC and PCC)	0
9+596	*32670*	*Total*	-	*2178*	-	-	*none*	-	-	*Average (of DGAC and PCC)*	*0*
9+596	32670	Automobiles	-	1271	-	56	none	-	-	Average (of DGAC and PCC)	0
9+596	32670	Medium trucks	-	776	-	56	none	-	-	Average (of DGAC and PCC)	0
9+596	32670	Heavy trucks	-	102	-	56	none	-	-	Average (of DGAC and PCC)	0
9+596	32670	Buses	-	15	-	56	none	-	-	Average (of DGAC and PCC)	0
9+596	32670	Motorcycles	-	14	-	56	none	-	-	Average (of DGAC and PCC)	0
9+596	32670	Auxiliary Vehicle	-	-	-	56	none	-	-	Average (of DGAC and PCC)	0
10+731	*33315*	*Total*	-	*2221*	-	-	*Traffic light*	*0*	-	*Average (of DGAC and PCC)*	*0*
10+731	33315	Automobiles	-	1296	-	56	Traffic light	0	-	Average (of DGAC and PCC)	0
10+731	33315	Medium trucks	-	792	-	56	Traffic light	0	-	Average (of DGAC and PCC)	0
10+731	33315	Heavy trucks	-	104	-	56	Traffic light	0	-	Average (of DGAC and PCC)	0
10+731	33315	Buses	-	15	-	56	Traffic light	0	-	Average (of DGAC and PCC)	0
10+731	33315	Motorcycles	-	14	-	56	Traffic light	0	-	Average (of DGAC and PCC)	0
10+731	33315	Auxiliary Vehicle	-	-	-	56	Traffic light	0	-	Average (of DGAC and PCC)	0
12+138	*30900*	*Total*	-	*2060*	-	-	*Traffic light*	*0*	-	*Average (of DGAC and PCC)*	*0*
12+138	30900	Automobiles	-	1202	-	56	Traffic light	0	-	Average (of DGAC and PCC)	0
12+138	30900	Medium trucks	-	734	-	56	Traffic light	0	-	Average (of DGAC and PCC)	0
12+138	30900	Heavy trucks	-	97	-	56	Traffic light	0	-	Average (of DGAC and PCC)	0
12+138	30900	Buses	-	14	-	56	Traffic light	0	-	Average (of DGAC and PCC)	0
12+138	30900	Motorcycles	-	13	-	56	Traffic light	0	-	Average (of DGAC and PCC)	0
12+138	30900	Auxiliary Vehicle	-	-	-	56	Traffic light	0	-	Average (of DGAC and PCC)	0
13+015	*30900*	*Total*	-	*2060*	-	-	*none*	-	-	*Average (of DGAC and PCC)*	*0*
13+015	30900	Automobiles	-	1202	-	56	none	-	-	Average (of DGAC and PCC)	0

13+015	30900	Medium trucks	-	734	-	56	none	-	-	Average (of DGAC and PCC)	0
13+015	30900	Heavy trucks	-	97	-	56	none	-	-	Average (of DGAC and PCC)	0
13+015	30900	Buses	-	14	-	56	none	-	-	Average (of DGAC and PCC)	0
13+015	30900	Motorcycles	-	13	-	56	none	-	-	Average (of DGAC and PCC)	0
13+015	30900	Auxiliary Vehicle	-	-	-	56	none	-	-	Average (of DGAC and PCC)	0
14+695	*33915*	*Total*	-	*2261*	-	-	*Traffic light*	*0*	-	*Average (of DGAC and PCC)*	*0*
14+695	33915	Automobiles	-	1320	-	56	Traffic light	0	-	Average (of DGAC and PCC)	0
14+695	33915	Medium trucks	-	806	-	56	Traffic light	0	-	Average (of DGAC and PCC)	0
14+695	33915	Heavy trucks	-	106	-	56	Traffic light	0	-	Average (of DGAC and PCC)	0
14+695	33915	Buses	-	15	-	56	Traffic light	0	-	Average (of DGAC and PCC)	0
14+695	33915	Motorcycles	-	14	-	56	Traffic light	0	-	Average (of DGAC and PCC)	0
14+695	33915	Auxiliary Vehicle	-	-	-	56	Traffic light	0	-	Average (of DGAC and PCC)	0
15+727	*25215*	*Total*	-	*1681*	-	-	*Traffic light*	*0*	-	*Average (of DGAC and PCC)*	*0*
15+727	25215	Automobiles	-	980	-	56	Traffic light	0	-	Average (of DGAC and PCC)	0
15+727	25215	Medium trucks	-	599	-	56	Traffic light	0	-	Average (of DGAC and PCC)	0
15+727	25215	Heavy trucks	-	79	-	56	Traffic light	0	-	Average (of DGAC and PCC)	0
15+727	25215	Buses	-	12	-	56	Traffic light	0	-	Average (of DGAC and PCC)	0
15+727	25215	Motorcycles	-	11	-	56	Traffic light	0	-	Average (of DGAC and PCC)	0
15+727	25215	Auxiliary Vehicle	-	-	-	56	Traffic light	0	-	Average (of DGAC and PCC)	0
17+563	*645*	*Total*	-	*43*	-	-	*Traffic light*	*0*	-	*Average (of DGAC and PCC)*	*0*
17+563	645	Automobiles	-	24	-	56	Traffic light	0	-	Average (of DGAC and PCC)	0
17+563	645	Medium trucks	-	15	-	56	Traffic light	0	-	Average (of DGAC and PCC)	0
17+563	645	Heavy trucks	-	2	-	56	Traffic light	0	-	Average (of DGAC and PCC)	0
17+563	645	Buses	-	1	-	56	Traffic light	0	-	Average (of DGAC and PCC)	0
17+563	645	Motorcycles	-	1	-	56	Traffic light	0	-	Average (of DGAC and PCC)	0
17+563	645	Auxiliary Vehicle	-	-	-	56	Traffic light	0	-	Average (of DGAC and PCC)	0
17+718	-						-	-	-	-	-
0+000	*645*	*Total*	-	*43*	-	-	*none*	-	-	*Average (of DGAC and PCC)*	*0*
0+000	645	Automobiles	-	24	-	56	none	-	-	Average (of DGAC and PCC)	0
0+000	645	Medium trucks	-	15	-	56	none	-	-	Average (of DGAC and PCC)	0
0+000	645	Heavy trucks	-	2	-	56	none	-	-	Average (of DGAC and PCC)	0
0+000	645	Buses	-	1	-	56	none	-	-	Average (of DGAC and PCC)	0
0+000	645	Motorcycles	-	1	-	56	none	-	-	Average (of DGAC and PCC)	0
0+000	645	Auxiliary Vehicle	-	-	-	56	none	-	-	Average (of DGAC and PCC)	0
Tyler Ave SB	Traffic direction:	In entry direction									
8+855	*41715*	*Total*	-	*2781*	-	-	*none*	-	-	*Average (of DGAC and PCC)*	*0*
8+855	41715	Automobiles	-	1623	-	40	none	-	-	Average (of DGAC and PCC)	0
8+855	41715	Medium trucks	-	991	-	40	none	-	-	Average (of DGAC and PCC)	0
8+855	41715	Heavy trucks	-	130	-	40	none	-	-	Average (of DGAC and PCC)	0
8+855	41715	Buses	-	19	-	40	none	-	-	Average (of DGAC and PCC)	0
8+855	41715	Motorcycles	-	18	-	40	none	-	-	Average (of DGAC and PCC)	0
8+855	41715	Auxiliary Vehicle	-	-	-	40	none	-	-	Average (of DGAC and PCC)	0
9+080	*41715*	*Total*	-	*2781*	-	-	*none*	-	-	*Average (of DGAC and PCC)*	*0*
9+080	41715	Automobiles	-	1623	-	40	none	-	-	Average (of DGAC and PCC)	0
9+080	41715	Medium trucks	-	991	-	40	none	-	-	Average (of DGAC and PCC)	0
9+080	41715	Heavy trucks	-	130	-	40	none	-	-	Average (of DGAC and PCC)	0
9+080	41715	Buses	-	19	-	40	none	-	-	Average (of DGAC and PCC)	0
9+080	41715	Motorcycles	-	18	-	40	none	-	-	Average (of DGAC and PCC)	0
9+080	41715	Auxiliary Vehicle	-	-	-	40	none	-	-	Average (of DGAC and PCC)	0
9+159	*41715*	*Total*	-	*2781*	-	-	*none*	-	-	*Average (of DGAC and PCC)*	*0*
9+159	41715	Automobiles	-	1623	-	40	none	-	-	Average (of DGAC and PCC)	0
9+159	41715	Medium trucks	-	991	-	40	none	-	-	Average (of DGAC and PCC)	0
9+159	41715	Heavy trucks	-	130	-	40	none	-	-	Average (of DGAC and PCC)	0
9+159	41715	Buses	-	19	-	40	none	-	-	Average (of DGAC and PCC)	0
9+159	41715	Motorcycles	-	18	-	40	none	-	-	Average (of DGAC and PCC)	0
9+159	41715	Auxiliary Vehicle	-	-	-	40	none	-	-	Average (of DGAC and PCC)	0
9+219	*41715*	*Total*	-	*2781*	-	-	*none*	-	-	*Average (of DGAC and PCC)*	*0*
9+219	41715	Automobiles	-	1623	-	40	none	-	-	Average (of DGAC and PCC)	0
9+219	41715	Medium trucks	-	991	-	40	none	-	-	Average (of DGAC and PCC)	0
9+219	41715	Heavy trucks	-	130	-	40	none	-	-	Average (of DGAC and PCC)	0
9+219	41715	Buses	-	19	-	40	none	-	-	Average (of DGAC and PCC)	0

9+219	41715	Motorcycles	-	18	-	40	none	-	-	Average (of DGAC and PCC)	0
9+219	41715	Auxiliary Vehicle	-	-	-	40	none	-	-	Average (of DGAC and PCC)	0
9+295	*41715*	*Total*	-	*2781*	-	-	*Traffic light*		*0*	- *Average (of DGAC and PCC)*	*0*
9+295	41715	Automobiles	-	1623	-	40	Traffic light		0	- Average (of DGAC and PCC)	0
9+295	41715	Medium trucks	-	991	-	40	Traffic light		0	- Average (of DGAC and PCC)	0
9+295	41715	Heavy trucks	-	130	-	40	Traffic light		0	- Average (of DGAC and PCC)	0
9+295	41715	Buses	-	19	-	40	Traffic light		0	- Average (of DGAC and PCC)	0
9+295	41715	Motorcycles	-	18	-	40	Traffic light		0	- Average (of DGAC and PCC)	0
9+295	41715	Auxiliary Vehicle	-	-	-	40	Traffic light		0	- Average (of DGAC and PCC)	0
9+897	*41715*	*Total*	-	*2781*	-	-	*none*	-	-	*Average (of DGAC and PCC)*	*0*
9+897	41715	Automobiles	-	1623	-	40	none	-	-	Average (of DGAC and PCC)	0
9+897	41715	Medium trucks	-	991	-	40	none	-	-	Average (of DGAC and PCC)	0
9+897	41715	Heavy trucks	-	130	-	40	none	-	-	Average (of DGAC and PCC)	0
9+897	41715	Buses	-	19	-	40	none	-	-	Average (of DGAC and PCC)	0
9+897	41715	Motorcycles	-	18	-	40	none	-	-	Average (of DGAC and PCC)	0
9+897	41715	Auxiliary Vehicle	-	-	-	40	none	-	-	Average (of DGAC and PCC)	0
9+989	*41715*	*Total*	-	*2781*	-	-	*none*	-	-	*Average (of DGAC and PCC)*	*0*
9+989	41715	Automobiles	-	1623	-	40	none	-	-	Average (of DGAC and PCC)	0
9+989	41715	Medium trucks	-	991	-	40	none	-	-	Average (of DGAC and PCC)	0
9+989	41715	Heavy trucks	-	130	-	40	none	-	-	Average (of DGAC and PCC)	0
9+989	41715	Buses	-	19	-	40	none	-	-	Average (of DGAC and PCC)	0
9+989	41715	Motorcycles	-	18	-	40	none	-	-	Average (of DGAC and PCC)	0
9+989	41715	Auxiliary Vehicle	-	-	-	40	none	-	-	Average (of DGAC and PCC)	0
10+301	*41715*	*Total*	-	*2781*	-	-	*none*	-	-	*Average (of DGAC and PCC)*	*0*
10+301	41715	Automobiles	-	1623	-	40	none	-	-	Average (of DGAC and PCC)	0
10+301	41715	Medium trucks	-	991	-	40	none	-	-	Average (of DGAC and PCC)	0
10+301	41715	Heavy trucks	-	130	-	40	none	-	-	Average (of DGAC and PCC)	0
10+301	41715	Buses	-	19	-	40	none	-	-	Average (of DGAC and PCC)	0
10+301	41715	Motorcycles	-	18	-	40	none	-	-	Average (of DGAC and PCC)	0
10+301	41715	Auxiliary Vehicle	-	-	-	40	none	-	-	Average (of DGAC and PCC)	0
10+443	*41715*	*Total*	-	*2781*	-	-	*none*	-	-	*Average (of DGAC and PCC)*	*0*
10+443	41715	Automobiles	-	1623	-	40	none	-	-	Average (of DGAC and PCC)	0
10+443	41715	Medium trucks	-	991	-	40	none	-	-	Average (of DGAC and PCC)	0
10+443	41715	Heavy trucks	-	130	-	40	none	-	-	Average (of DGAC and PCC)	0
10+443	41715	Buses	-	19	-	40	none	-	-	Average (of DGAC and PCC)	0
10+443	41715	Motorcycles	-	18	-	40	none	-	-	Average (of DGAC and PCC)	0
10+443	41715	Auxiliary Vehicle	-	-	-	40	none	-	-	Average (of DGAC and PCC)	0
10+494	*41715*	*Total*	-	*2781*	-	-	*none*	-	-	*Average (of DGAC and PCC)*	*0*
10+494	41715	Automobiles	-	1623	-	40	none	-	-	Average (of DGAC and PCC)	0
10+494	41715	Medium trucks	-	991	-	40	none	-	-	Average (of DGAC and PCC)	0
10+494	41715	Heavy trucks	-	130	-	40	none	-	-	Average (of DGAC and PCC)	0
10+494	41715	Buses	-	19	-	40	none	-	-	Average (of DGAC and PCC)	0
10+494	41715	Motorcycles	-	18	-	40	none	-	-	Average (of DGAC and PCC)	0
10+494	41715	Auxiliary Vehicle	-	-	-	40	none	-	-	Average (of DGAC and PCC)	0
10+960	*41715*	*Total*	-	*2781*	-	-	*none*	-	-	*Average (of DGAC and PCC)*	*0*
10+960	41715	Automobiles	-	1623	-	40	none	-	-	Average (of DGAC and PCC)	0
10+960	41715	Medium trucks	-	991	-	40	none	-	-	Average (of DGAC and PCC)	0
10+960	41715	Heavy trucks	-	130	-	40	none	-	-	Average (of DGAC and PCC)	0
10+960	41715	Buses	-	19	-	40	none	-	-	Average (of DGAC and PCC)	0
10+960	41715	Motorcycles	-	18	-	40	none	-	-	Average (of DGAC and PCC)	0
10+960	41715	Auxiliary Vehicle	-	-	-	40	none	-	-	Average (of DGAC and PCC)	0
11+832	*14430*	*Total*	-	*962*	-	-	*Traffic light*		*0*	- *Average (of DGAC and PCC)*	*0*
11+832	14430	Automobiles	-	561	-	40	Traffic light		0	- Average (of DGAC and PCC)	0
11+832	14430	Medium trucks	-	343	-	40	Traffic light		0	- Average (of DGAC and PCC)	0
11+832	14430	Heavy trucks	-	45	-	40	Traffic light		0	- Average (of DGAC and PCC)	0
11+832	14430	Buses	-	7	-	40	Traffic light		0	- Average (of DGAC and PCC)	0
11+832	14430	Motorcycles	-	6	-	40	Traffic light		0	- Average (of DGAC and PCC)	0
11+832	14430	Auxiliary Vehicle	-	-	-	40	Traffic light		0	- Average (of DGAC and PCC)	0
12+140	*14430*	*Total*	-	*962*	-	-	*none*	-	-	*Average (of DGAC and PCC)*	*0*
12+140	14430	Automobiles	-	561	-	40	none	-	-	Average (of DGAC and PCC)	0
12+140	14430	Medium trucks	-	343	-	40	none	-	-	Average (of DGAC and PCC)	0

12+140	14430	Heavy trucks	-	45	-	40	none	-	-	Average (of DGAC and PCC)	0
12+140	14430	Buses	-	7	-	40	none	-	-	Average (of DGAC and PCC)	0
12+140	14430	Motorcycles	-	6	-	40	none	-	-	Average (of DGAC and PCC)	0
12+140	14430	Auxiliary Vehicle	-	-	-	40	none	-	-	Average (of DGAC and PCC)	0
12+255	*14265*	*Total*	-	*951*	-	-	*Traffic light*	*0*	-	*Average (of DGAC and PCC)*	*0*
12+255	14265	Automobiles	-	554	-	40	Traffic light	0	-	Average (of DGAC and PCC)	0
12+255	14265	Medium trucks	-	339	-	40	Traffic light	0	-	Average (of DGAC and PCC)	0
12+255	14265	Heavy trucks	-	45	-	40	Traffic light	0	-	Average (of DGAC and PCC)	0
12+255	14265	Buses	-	7	-	40	Traffic light	0	-	Average (of DGAC and PCC)	0
12+255	14265	Motorcycles	-	6	-	40	Traffic light	0	-	Average (of DGAC and PCC)	0
12+255	14265	Auxiliary Vehicle	-	-	-	40	Traffic light	0	-	Average (of DGAC and PCC)	0
13+507	*26115*	*Total*	-	*1741*	-	-	*Traffic light*	*0*	-	*Average (of DGAC and PCC)*	*0*
13+507	26115	Automobiles	-	1016	-	40	Traffic light	0	-	Average (of DGAC and PCC)	0
13+507	26115	Medium trucks	-	620	-	40	Traffic light	0	-	Average (of DGAC and PCC)	0
13+507	26115	Heavy trucks	-	82	-	40	Traffic light	0	-	Average (of DGAC and PCC)	0
13+507	26115	Buses	-	12	-	40	Traffic light	0	-	Average (of DGAC and PCC)	0
13+507	26115	Motorcycles	-	11	-	40	Traffic light	0	-	Average (of DGAC and PCC)	0
13+507	26115	Auxiliary Vehicle	-	-	-	40	Traffic light	0	-	Average (of DGAC and PCC)	0
13+960	-						-	-	-	-	-
0+000	*26115*	*Total*	-	*1741*	-	-	*none*	-	-	*Average (of DGAC and PCC)*	*0*
0+000	26115	Automobiles	-	1016	-	40	none	-	-	Average (of DGAC and PCC)	0
0+000	26115	Medium trucks	-	620	-	40	none	-	-	Average (of DGAC and PCC)	0
0+000	26115	Heavy trucks	-	82	-	40	none	-	-	Average (of DGAC and PCC)	0
0+000	26115	Buses	-	12	-	40	none	-	-	Average (of DGAC and PCC)	0
0+000	26115	Motorcycles	-	11	-	40	none	-	-	Average (of DGAC and PCC)	0
0+000	26115	Auxiliary Vehicle	-	-	-	40	none	-	-	Average (of DGAC and PCC)	0
Tyler Ave NB	Traffic direction:	In entry direction									
8+855	*27075*	*Total*	-	*1805*	-	-	*none*	-	-	*Average (of DGAC and PCC)*	*0*
8+855	27075	Automobiles	-	1053	-	40	none	-	-	Average (of DGAC and PCC)	0
8+855	27075	Medium trucks	-	643	-	40	none	-	-	Average (of DGAC and PCC)	0
8+855	27075	Heavy trucks	-	85	-	40	none	-	-	Average (of DGAC and PCC)	0
8+855	27075	Buses	-	12	-	40	none	-	-	Average (of DGAC and PCC)	0
8+855	27075	Motorcycles	-	12	-	40	none	-	-	Average (of DGAC and PCC)	0
8+855	27075	Auxiliary Vehicle	-	-	-	40	none	-	-	Average (of DGAC and PCC)	0
9+289	*27060*	*Total*	-	*1804*	-	-	*Traffic light*	*0*	-	*Average (of DGAC and PCC)*	*0*
9+289	27060	Automobiles	-	1053	-	40	Traffic light	0	-	Average (of DGAC and PCC)	0
9+289	27060	Medium trucks	-	643	-	40	Traffic light	0	-	Average (of DGAC and PCC)	0
9+289	27060	Heavy trucks	-	85	-	40	Traffic light	0	-	Average (of DGAC and PCC)	0
9+289	27060	Buses	-	12	-	40	Traffic light	0	-	Average (of DGAC and PCC)	0
9+289	27060	Motorcycles	-	11	-	40	Traffic light	0	-	Average (of DGAC and PCC)	0
9+289	27060	Auxiliary Vehicle	-	-	-	40	Traffic light	0	-	Average (of DGAC and PCC)	0
10+554	*13590*	*Total*	-	*906*	-	-	*Traffic light*	*0*	-	*Average (of DGAC and PCC)*	*0*
10+554	13590	Automobiles	-	528	-	40	Traffic light	0	-	Average (of DGAC and PCC)	0
10+554	13590	Medium trucks	-	323	-	40	Traffic light	0	-	Average (of DGAC and PCC)	0
10+554	13590	Heavy trucks	-	43	-	40	Traffic light	0	-	Average (of DGAC and PCC)	0
10+554	13590	Buses	-	6	-	40	Traffic light	0	-	Average (of DGAC and PCC)	0
10+554	13590	Motorcycles	-	6	-	40	Traffic light	0	-	Average (of DGAC and PCC)	0
10+554	13590	Auxiliary Vehicle	-	-	-	40	Traffic light	0	-	Average (of DGAC and PCC)	0
10+667	*13590*	*Total*	-	*906*	-	-	*none*	-	-	*Average (of DGAC and PCC)*	*0*
10+667	13590	Automobiles	-	528	-	40	none	-	-	Average (of DGAC and PCC)	0
10+667	13590	Medium trucks	-	323	-	40	none	-	-	Average (of DGAC and PCC)	0
10+667	13590	Heavy trucks	-	43	-	40	none	-	-	Average (of DGAC and PCC)	0
10+667	13590	Buses	-	6	-	40	none	-	-	Average (of DGAC and PCC)	0
10+667	13590	Motorcycles	-	6	-	40	none	-	-	Average (of DGAC and PCC)	0
10+667	13590	Auxiliary Vehicle	-	-	-	40	none	-	-	Average (of DGAC and PCC)	0
10+952	*16545*	*Total*	-	*1103*	-	-	*Traffic light*	*0*	-	*Average (of DGAC and PCC)*	*0*
10+952	16545	Automobiles	-	643	-	40	Traffic light	0	-	Average (of DGAC and PCC)	0
10+952	16545	Medium trucks	-	393	-	40	Traffic light	0	-	Average (of DGAC and PCC)	0
10+952	16545	Heavy trucks	-	52	-	40	Traffic light	0	-	Average (of DGAC and PCC)	0
10+952	16545	Buses	-	8	-	40	Traffic light	0	-	Average (of DGAC and PCC)	0
10+952	16545	Motorcycles	-	7	-	40	Traffic light	0	-	Average (of DGAC and PCC)	0

10+952		16545	Auxiliary Vehicle	-	-	-		40	Traffic light		0	-	Average (of DGAC and PCC)	0
11+852		*16545*	*Total*	-		*1103*	-	-	*none*	-	-		*Average (of DGAC and PCC)*	*0*
11+852		16545	Automobiles	-		643	-		40	none	-	-	Average (of DGAC and PCC)	0
11+852		16545	Medium trucks	-		393	-		40	none	-	-	Average (of DGAC and PCC)	0
11+852		16545	Heavy trucks	-		52	-		40	none	-	-	Average (of DGAC and PCC)	0
11+852		16545	Buses	-		8	-		40	none	-	-	Average (of DGAC and PCC)	0
11+852		16545	Motorcycles	-		7	-		40	none	-	-	Average (of DGAC and PCC)	0
11+852		16545	Auxiliary Vehicle	-	-	-			40	none	-	-	Average (of DGAC and PCC)	0
12+309		*16545*	*Total*	-		*1103*	-	-	*none*	-	-		*Average (of DGAC and PCC)*	*0*
12+309		16545	Automobiles	-		643	-		40	none	-	-	Average (of DGAC and PCC)	0
12+309		16545	Medium trucks	-		393	-		40	none	-	-	Average (of DGAC and PCC)	0
12+309		16545	Heavy trucks	-		52	-		40	none	-	-	Average (of DGAC and PCC)	0
12+309		16545	Buses	-		8	-		40	none	-	-	Average (of DGAC and PCC)	0
12+309		16545	Motorcycles	-		7	-		40	none	-	-	Average (of DGAC and PCC)	0
12+309		16545	Auxiliary Vehicle	-	-	-			40	none	-	-	Average (of DGAC and PCC)	0
12+363		*16545*	*Total*	-		*1103*	-	-	*none*	-	-		*Average (of DGAC and PCC)*	*0*
12+363		16545	Automobiles	-		643	-		40	none	-	-	Average (of DGAC and PCC)	0
12+363		16545	Medium trucks	-		393	-		40	none	-	-	Average (of DGAC and PCC)	0
12+363		16545	Heavy trucks	-		52	-		40	none	-	-	Average (of DGAC and PCC)	0
12+363		16545	Buses	-		8	-		40	none	-	-	Average (of DGAC and PCC)	0
12+363		16545	Motorcycles	-		7	-		40	none	-	-	Average (of DGAC and PCC)	0
12+363		16545	Auxiliary Vehicle	-	-	-			40	none	-	-	Average (of DGAC and PCC)	0
12+649		*16545*	*Total*	-		*1103*	-	-	*none*	-	-		*Average (of DGAC and PCC)*	*0*
12+649		16545	Automobiles	-		643	-		40	none	-	-	Average (of DGAC and PCC)	0
12+649		16545	Medium trucks	-		393	-		40	none	-	-	Average (of DGAC and PCC)	0
12+649		16545	Heavy trucks	-		52	-		40	none	-	-	Average (of DGAC and PCC)	0
12+649		16545	Buses	-		8	-		40	none	-	-	Average (of DGAC and PCC)	0
12+649		16545	Motorcycles	-		7	-		40	none	-	-	Average (of DGAC and PCC)	0
12+649		16545	Auxiliary Vehicle	-	-	-			40	none	-	-	Average (of DGAC and PCC)	0
12+807		*16545*	*Total*	-		*1103*	-	-	*none*	-	-		*Average (of DGAC and PCC)*	*0*
12+807		16545	Automobiles	-		643	-		40	none	-	-	Average (of DGAC and PCC)	0
12+807		16545	Medium trucks	-		393	-		40	none	-	-	Average (of DGAC and PCC)	0
12+807		16545	Heavy trucks	-		52	-		40	none	-	-	Average (of DGAC and PCC)	0
12+807		16545	Buses	-		8	-		40	none	-	-	Average (of DGAC and PCC)	0
12+807		16545	Motorcycles	-		7	-		40	none	-	-	Average (of DGAC and PCC)	0
12+807		16545	Auxiliary Vehicle	-	-	-			40	none	-	-	Average (of DGAC and PCC)	0
13+494		*44535*	*Total*	-		*2969*	-	-	*Traffic light*		*0*	-	*Average (of DGAC and PCC)*	*0*
13+494		44535	Automobiles	-		1733	-		40	Traffic light		0	-	Average (of DGAC and PCC)	0
13+494		44535	Medium trucks	-		1058	-		40	Traffic light		0	-	Average (of DGAC and PCC)	0
13+494		44535	Heavy trucks	-		139	-		40	Traffic light		0	-	Average (of DGAC and PCC)	0
13+494		44535	Buses	-		20	-		40	Traffic light		0	-	Average (of DGAC and PCC)	0
13+494		44535	Motorcycles	-		19	-		40	Traffic light		0	-	Average (of DGAC and PCC)	0
13+494		44535	Auxiliary Vehicle	-	-	-			40	Traffic light		0	-	Average (of DGAC and PCC)	0
13+584		*44535*	*Total*	-		*2969*	-	-	*none*	-	-		*Average (of DGAC and PCC)*	*0*
13+584		44535	Automobiles	-		1733	-		40	none	-	-	Average (of DGAC and PCC)	0
13+584		44535	Medium trucks	-		1058	-		40	none	-	-	Average (of DGAC and PCC)	0
13+584		44535	Heavy trucks	-		139	-		40	none	-	-	Average (of DGAC and PCC)	0
13+584		44535	Buses	-		20	-		40	none	-	-	Average (of DGAC and PCC)	0
13+584		44535	Motorcycles	-		19	-		40	none	-	-	Average (of DGAC and PCC)	0
13+584		44535	Auxiliary Vehicle	-	-	-			40	none	-	-	Average (of DGAC and PCC)	0
13+717		*44535*	*Total*	-		*2969*	-	-	*none*	-	-		*Average (of DGAC and PCC)*	*0*
13+717		44535	Automobiles	-		1733	-		40	none	-	-	Average (of DGAC and PCC)	0
13+717		44535	Medium trucks	-		1058	-		40	none	-	-	Average (of DGAC and PCC)	0
13+717		44535	Heavy trucks	-		139	-		40	none	-	-	Average (of DGAC and PCC)	0
13+717		44535	Buses	-		20	-		40	none	-	-	Average (of DGAC and PCC)	0
13+717		44535	Motorcycles	-		19	-		40	none	-	-	Average (of DGAC and PCC)	0
13+717		44535	Auxiliary Vehicle	-	-	-			40	none	-	-	Average (of DGAC and PCC)	0
13+960	-								-		-	-	-	-
0+000		*44535*	*Total*	-		*2969*	-	-	*none*	-	-		*Average (of DGAC and PCC)*	*0*
0+000		44535	Automobiles	-		1733	-		40	none	-	-	Average (of DGAC and PCC)	0
0+000		44535	Medium trucks	-		1058	-		40	none	-	-	Average (of DGAC and PCC)	0

0+000	44535	Heavy trucks	-	139	-	40	none	-	-	Average (of DGAC and PCC)	0
0+000	44535	Buses	-	20	-	40	none	-	-	Average (of DGAC and PCC)	0
0+000	44535	Motorcycles	-	19	-	40	none	-	-	Average (of DGAC and PCC)	0
0+000	44535	Auxiliary Vehicle	-	-	-	40	none	-	-	Average (of DGAC and PCC)	0
Loftus Dr EB	Traffic direction:	In entry direction									
9+289	*14235*	*Total*	-	*949*	-	-	*Traffic light*	*0*	-	*Average (of DGAC and PCC)*	*0*
9+289	14235	Automobiles	-	553	-	56	Traffic light	0	-	Average (of DGAC and PCC)	0
9+289	14235	Medium trucks	-	338	-	56	Traffic light	0	-	Average (of DGAC and PCC)	0
9+289	14235	Heavy trucks	-	45	-	56	Traffic light	0	-	Average (of DGAC and PCC)	0
9+289	14235	Buses	-	7	-	56	Traffic light	0	-	Average (of DGAC and PCC)	0
9+289	14235	Motorcycles	-	6	-	56	Traffic light	0	-	Average (of DGAC and PCC)	0
9+289	14235	Auxiliary Vehicle	-	-	-	56	Traffic light	0	-	Average (of DGAC and PCC)	0
9+811	*6795*	*Total*	-	*453*	-	-	*Traffic light*	*0*	-	*Average (of DGAC and PCC)*	*0*
9+811	6795	Automobiles	-	264	-	56	Traffic light	0	-	Average (of DGAC and PCC)	0
9+811	6795	Medium trucks	-	161	-	56	Traffic light	0	-	Average (of DGAC and PCC)	0
9+811	6795	Heavy trucks	-	22	-	56	Traffic light	0	-	Average (of DGAC and PCC)	0
9+811	6795	Buses	-	3	-	56	Traffic light	0	-	Average (of DGAC and PCC)	0
9+811	6795	Motorcycles	-	3	-	56	Traffic light	0	-	Average (of DGAC and PCC)	0
9+811	6795	Auxiliary Vehicle	-	-	-	56	Traffic light	0	-	Average (of DGAC and PCC)	0
10+045	-						-	-	-	-	-
0+000	*6795*	*Total*	-	*453*	-	-	*none*	-	-	*Average (of DGAC and PCC)*	*0*
0+000	6795	Automobiles	-	264	-	56	none	-	-	Average (of DGAC and PCC)	0
0+000	6795	Medium trucks	-	161	-	56	none	-	-	Average (of DGAC and PCC)	0
0+000	6795	Heavy trucks	-	22	-	56	none	-	-	Average (of DGAC and PCC)	0
0+000	6795	Buses	-	3	-	56	none	-	-	Average (of DGAC and PCC)	0
0+000	6795	Motorcycles	-	3	-	56	none	-	-	Average (of DGAC and PCC)	0
0+000	6795	Auxiliary Vehicle	-	-	-	56	none	-	-	Average (of DGAC and PCC)	0
Loftus Dr WB	Traffic direction:	In entry direction									
9+289	*21540*	*Total*	-	*1436*	-	-	*none*	-	-	*Average (of DGAC and PCC)*	*0*
9+289	21540	Automobiles	-	838	-	56	none	-	-	Average (of DGAC and PCC)	0
9+289	21540	Medium trucks	-	512	-	56	none	-	-	Average (of DGAC and PCC)	0
9+289	21540	Heavy trucks	-	67	-	56	none	-	-	Average (of DGAC and PCC)	0
9+289	21540	Buses	-	10	-	56	none	-	-	Average (of DGAC and PCC)	0
9+289	21540	Motorcycles	-	9	-	56	none	-	-	Average (of DGAC and PCC)	0
9+289	21540	Auxiliary Vehicle	-	-	-	56	none	-	-	Average (of DGAC and PCC)	0
9+503	*21540*	*Total*	-	*1436*	-	-	*Traffic light*	*0*	-	*Average (of DGAC and PCC)*	*0*
9+503	21540	Automobiles	-	838	-	56	Traffic light	0	-	Average (of DGAC and PCC)	0
9+503	21540	Medium trucks	-	512	-	56	Traffic light	0	-	Average (of DGAC and PCC)	0
9+503	21540	Heavy trucks	-	67	-	56	Traffic light	0	-	Average (of DGAC and PCC)	0
9+503	21540	Buses	-	10	-	56	Traffic light	0	-	Average (of DGAC and PCC)	0
9+503	21540	Motorcycles	-	9	-	56	Traffic light	0	-	Average (of DGAC and PCC)	0
9+503	21540	Auxiliary Vehicle	-	-	-	56	Traffic light	0	-	Average (of DGAC and PCC)	0
10+045	-						-	-	-	-	-
0+000	*21540*	*Total*	-	*1436*	-	-	*none*	-	-	*Average (of DGAC and PCC)*	*0*
0+000	21540	Automobiles	-	838	-	56	none	-	-	Average (of DGAC and PCC)	0
0+000	21540	Medium trucks	-	512	-	56	none	-	-	Average (of DGAC and PCC)	0
0+000	21540	Heavy trucks	-	67	-	56	none	-	-	Average (of DGAC and PCC)	0
0+000	21540	Buses	-	10	-	56	none	-	-	Average (of DGAC and PCC)	0
0+000	21540	Motorcycles	-	9	-	56	none	-	-	Average (of DGAC and PCC)	0
0+000	21540	Auxiliary Vehicle	-	-	-	56	none	-	-	Average (of DGAC and PCC)	0
Santa Anita Ave SB	Traffic direction:	In entry direction									
10+304	*41715*	*Total*	-	*2781*	-	-	*none*	-	-	*Average (of DGAC and PCC)*	*0*
10+304	41715	Automobiles	-	1623	-	56	none	-	-	Average (of DGAC and PCC)	0
10+304	41715	Medium trucks	-	991	-	56	none	-	-	Average (of DGAC and PCC)	0
10+304	41715	Heavy trucks	-	130	-	56	none	-	-	Average (of DGAC and PCC)	0
10+304	41715	Buses	-	19	-	56	none	-	-	Average (of DGAC and PCC)	0
10+304	41715	Motorcycles	-	18	-	56	none	-	-	Average (of DGAC and PCC)	0
10+304	41715	Auxiliary Vehicle	-	-	-	56	none	-	-	Average (of DGAC and PCC)	0
10+458	*41715*	*Total*	-	*2781*	-	-	*none*	-	-	*Average (of DGAC and PCC)*	*0*
10+458	41715	Automobiles	-	1623	-	56	none	-	-	Average (of DGAC and PCC)	0
10+458	41715	Medium trucks	-	991	-	56	none	-	-	Average (of DGAC and PCC)	0

10+458	41715	Heavy trucks	-	130	-	56	none	-	-	Average (of DGAC and PCC)	0
10+458	41715	Buses	-	19	-	56	none	-	-	Average (of DGAC and PCC)	0
10+458	41715	Motorcycles	-	18	-	56	none	-	-	Average (of DGAC and PCC)	0
10+458	41715	Auxiliary Vehicle	-	-	-	56	none	-	-	Average (of DGAC and PCC)	0
12+144	*39525*	*Total*	-	*2635*	-	-	*Traffic light*	*0*	-	*Average (of DGAC and PCC)*	*0*
12+144	39525	Automobiles	-	1538	-	56	Traffic light	0	-	Average (of DGAC and PCC)	0
12+144	39525	Medium trucks	-	939	-	56	Traffic light	0	-	Average (of DGAC and PCC)	0
12+144	39525	Heavy trucks	-	123	-	56	Traffic light	0	-	Average (of DGAC and PCC)	0
12+144	39525	Buses	-	18	-	56	Traffic light	0	-	Average (of DGAC and PCC)	0
12+144	39525	Motorcycles	-	17	-	56	Traffic light	0	-	Average (of DGAC and PCC)	0
12+144	39525	Auxiliary Vehicle	-	-	-	56	Traffic light	0	-	Average (of DGAC and PCC)	0
12+291	*39525*	*Total*	-	*2635*	-	-	*Traffic light*	*0*	-	*Average (of DGAC and PCC)*	*0*
12+291	39525	Automobiles	-	1538	-	56	Traffic light	0	-	Average (of DGAC and PCC)	0
12+291	39525	Medium trucks	-	939	-	56	Traffic light	0	-	Average (of DGAC and PCC)	0
12+291	39525	Heavy trucks	-	123	-	56	Traffic light	0	-	Average (of DGAC and PCC)	0
12+291	39525	Buses	-	18	-	56	Traffic light	0	-	Average (of DGAC and PCC)	0
12+291	39525	Motorcycles	-	17	-	56	Traffic light	0	-	Average (of DGAC and PCC)	0
12+291	39525	Auxiliary Vehicle	-	-	-	56	Traffic light	0	-	Average (of DGAC and PCC)	0
12+780	*48075*	*Total*	-	*3205*	-	-	*Traffic light*	*0*	-	*Average (of DGAC and PCC)*	*0*
12+780	48075	Automobiles	-	1871	-	56	Traffic light	0	-	Average (of DGAC and PCC)	0
12+780	48075	Medium trucks	-	1142	-	56	Traffic light	0	-	Average (of DGAC and PCC)	0
12+780	48075	Heavy trucks	-	150	-	56	Traffic light	0	-	Average (of DGAC and PCC)	0
12+780	48075	Buses	-	22	-	56	Traffic light	0	-	Average (of DGAC and PCC)	0
12+780	48075	Motorcycles	-	20	-	56	Traffic light	0	-	Average (of DGAC and PCC)	0
12+780	48075	Auxiliary Vehicle	-	-	-	56	Traffic light	0	-	Average (of DGAC and PCC)	0
14+018	*33540*	*Total*	-	*2236*	-	-	*Traffic light*	*0*	-	*Average (of DGAC and PCC)*	*0*
14+018	33540	Automobiles	-	1305	-	56	Traffic light	0	-	Average (of DGAC and PCC)	0
14+018	33540	Medium trucks	-	797	-	56	Traffic light	0	-	Average (of DGAC and PCC)	0
14+018	33540	Heavy trucks	-	105	-	56	Traffic light	0	-	Average (of DGAC and PCC)	0
14+018	33540	Buses	-	15	-	56	Traffic light	0	-	Average (of DGAC and PCC)	0
14+018	33540	Motorcycles	-	14	-	56	Traffic light	0	-	Average (of DGAC and PCC)	0
14+018	33540	Auxiliary Vehicle	-	-	-	56	Traffic light	0	-	Average (of DGAC and PCC)	0
14+188	*33540*	*Total*	-	*2236*	-	-	*none*	-	-	*Average (of DGAC and PCC)*	*0*
14+188	33540	Automobiles	-	1305	-	56	none	-	-	Average (of DGAC and PCC)	0
14+188	33540	Medium trucks	-	797	-	56	none	-	-	Average (of DGAC and PCC)	0
14+188	33540	Heavy trucks	-	105	-	56	none	-	-	Average (of DGAC and PCC)	0
14+188	33540	Buses	-	15	-	56	none	-	-	Average (of DGAC and PCC)	0
14+188	33540	Motorcycles	-	14	-	56	none	-	-	Average (of DGAC and PCC)	0
14+188	33540	Auxiliary Vehicle	-	-	-	56	none	-	-	Average (of DGAC and PCC)	0
14+491	-						-	-	-	-	-
0+000	*33540*	*Total*	-	*2236*	-	-	*none*	-	-	*Average (of DGAC and PCC)*	*0*
0+000	33540	Automobiles	-	1305	-	56	none	-	-	Average (of DGAC and PCC)	0
0+000	33540	Medium trucks	-	797	-	56	none	-	-	Average (of DGAC and PCC)	0
0+000	33540	Heavy trucks	-	105	-	56	none	-	-	Average (of DGAC and PCC)	0
0+000	33540	Buses	-	15	-	56	none	-	-	Average (of DGAC and PCC)	0
0+000	33540	Motorcycles	-	14	-	56	none	-	-	Average (of DGAC and PCC)	0
0+000	33540	Auxiliary Vehicle	-	-	-	56	none	-	-	Average (of DGAC and PCC)	0
Santa Anita Ave NB	Traffic direction:	In entry direction									
10+304	*38505*	*Total*	-	*2567*	-	-	*none*	-	-	*Average (of DGAC and PCC)*	*0*
10+304	38505	Automobiles	-	1499	-	56	none	-	-	Average (of DGAC and PCC)	0
10+304	38505	Medium trucks	-	915	-	56	none	-	-	Average (of DGAC and PCC)	0
10+304	38505	Heavy trucks	-	120	-	56	none	-	-	Average (of DGAC and PCC)	0
10+304	38505	Buses	-	17	-	56	none	-	-	Average (of DGAC and PCC)	0
10+304	38505	Motorcycles	-	16	-	56	none	-	-	Average (of DGAC and PCC)	0
10+304	38505	Auxiliary Vehicle	-	-	-	56	none	-	-	Average (of DGAC and PCC)	0
10+577	*38505*	*Total*	-	*2567*	-	-	*none*	-	-	*Average (of DGAC and PCC)*	*0*
10+577	38505	Automobiles	-	1499	-	56	none	-	-	Average (of DGAC and PCC)	0
10+577	38505	Medium trucks	-	915	-	56	none	-	-	Average (of DGAC and PCC)	0
10+577	38505	Heavy trucks	-	120	-	56	none	-	-	Average (of DGAC and PCC)	0
10+577	38505	Buses	-	17	-	56	none	-	-	Average (of DGAC and PCC)	0
10+577	38505	Motorcycles	-	16	-	56	none	-	-	Average (of DGAC and PCC)	0

10+577	38505	Auxiliary Vehicle	-	-	-		56	none	-	-	Average (of DGAC and PCC)	0
10+741	*38505*	*Total*	-		*2567*	-	-	*none*	-	-	*Average (of DGAC and PCC)*	*0*
10+741	38505	Automobiles	-		1499	-		56	none	-	-	Average (of DGAC and PCC)	0
10+741	38505	Medium trucks	-		915	-		56	none	-	-	Average (of DGAC and PCC)	0
10+741	38505	Heavy trucks	-		120	-		56	none	-	-	Average (of DGAC and PCC)	0
10+741	38505	Buses	-		17	-		56	none	-	-	Average (of DGAC and PCC)	0
10+741	38505	Motorcycles	-		16	-		56	none	-	-	Average (of DGAC and PCC)	0
10+741	38505	Auxiliary Vehicle	-	-	-		56	none	-	-	Average (of DGAC and PCC)	0
12+002	*43710*	*Total*	-		*2914*	-	-	*Traffic light*	*0*	-	*Average (of DGAC and PCC)*	*0*
12+002	43710	Automobiles	-		1701	-		56	Traffic light	0	-	Average (of DGAC and PCC)	0
12+002	43710	Medium trucks	-		1039	-		56	Traffic light	0	-	Average (of DGAC and PCC)	0
12+002	43710	Heavy trucks	-		136	-		56	Traffic light	0	-	Average (of DGAC and PCC)	0
12+002	43710	Buses	-		20	-		56	Traffic light	0	-	Average (of DGAC and PCC)	0
12+002	43710	Motorcycles	-		18	-		56	Traffic light	0	-	Average (of DGAC and PCC)	0
12+002	43710	Auxiliary Vehicle	-	-	-		56	Traffic light	0	-	Average (of DGAC and PCC)	0
12+148	*43710*	*Total*	-		*2914*	-	-	*none*	-	-	*Average (of DGAC and PCC)*	*0*
12+148	43710	Automobiles	-		1701	-		56	none	-	-	Average (of DGAC and PCC)	0
12+148	43710	Medium trucks	-		1039	-		56	none	-	-	Average (of DGAC and PCC)	0
12+148	43710	Heavy trucks	-		136	-		56	none	-	-	Average (of DGAC and PCC)	0
12+148	43710	Buses	-		20	-		56	none	-	-	Average (of DGAC and PCC)	0
12+148	43710	Motorcycles	-		18	-		56	none	-	-	Average (of DGAC and PCC)	0
12+148	43710	Auxiliary Vehicle	-	-	-		56	none	-	-	Average (of DGAC and PCC)	0
12+285	*43710*	*Total*	-		*2914*	-	-	*none*	-	-	*Average (of DGAC and PCC)*	*0*
12+285	43710	Automobiles	-		1701	-		56	none	-	-	Average (of DGAC and PCC)	0
12+285	43710	Medium trucks	-		1039	-		56	none	-	-	Average (of DGAC and PCC)	0
12+285	43710	Heavy trucks	-		136	-		56	none	-	-	Average (of DGAC and PCC)	0
12+285	43710	Buses	-		20	-		56	none	-	-	Average (of DGAC and PCC)	0
12+285	43710	Motorcycles	-		18	-		56	none	-	-	Average (of DGAC and PCC)	0
12+285	43710	Auxiliary Vehicle	-	-	-		56	none	-	-	Average (of DGAC and PCC)	0
12+478	*43710*	*Total*	-		*2914*	-	-	*none*	-	-	*Average (of DGAC and PCC)*	*0*
12+478	43710	Automobiles	-		1701	-		56	none	-	-	Average (of DGAC and PCC)	0
12+478	43710	Medium trucks	-		1039	-		56	none	-	-	Average (of DGAC and PCC)	0
12+478	43710	Heavy trucks	-		136	-		56	none	-	-	Average (of DGAC and PCC)	0
12+478	43710	Buses	-		20	-		56	none	-	-	Average (of DGAC and PCC)	0
12+478	43710	Motorcycles	-		18	-		56	none	-	-	Average (of DGAC and PCC)	0
12+478	43710	Auxiliary Vehicle	-	-	-		56	none	-	-	Average (of DGAC and PCC)	0
12+627	*38535*	*Total*	-		*2569*	-	-	*Traffic light*	*0*	-	*Average (of DGAC and PCC)*	*0*
12+627	38535	Automobiles	-		1500	-		56	Traffic light	0	-	Average (of DGAC and PCC)	0
12+627	38535	Medium trucks	-		916	-		56	Traffic light	0	-	Average (of DGAC and PCC)	0
12+627	38535	Heavy trucks	-		120	-		56	Traffic light	0	-	Average (of DGAC and PCC)	0
12+627	38535	Buses	-		17	-		56	Traffic light	0	-	Average (of DGAC and PCC)	0
12+627	38535	Motorcycles	-		16	-		56	Traffic light	0	-	Average (of DGAC and PCC)	0
12+627	38535	Auxiliary Vehicle	-	-	-		56	Traffic light	0	-	Average (of DGAC and PCC)	0
13+037	*38535*	*Total*	-		*2569*	-	-	*none*	-	-	*Average (of DGAC and PCC)*	*0*
13+037	38535	Automobiles	-		1500	-		56	none	-	-	Average (of DGAC and PCC)	0
13+037	38535	Medium trucks	-		916	-		56	none	-	-	Average (of DGAC and PCC)	0
13+037	38535	Heavy trucks	-		120	-		56	none	-	-	Average (of DGAC and PCC)	0
13+037	38535	Buses	-		17	-		56	none	-	-	Average (of DGAC and PCC)	0
13+037	38535	Motorcycles	-		16	-		56	none	-	-	Average (of DGAC and PCC)	0
13+037	38535	Auxiliary Vehicle	-	-	-		56	none	-	-	Average (of DGAC and PCC)	0
13+185	*38535*	*Total*	-		*2569*	-	-	*none*	-	-	*Average (of DGAC and PCC)*	*0*
13+185	38535	Automobiles	-		1500	-		56	none	-	-	Average (of DGAC and PCC)	0
13+185	38535	Medium trucks	-		916	-		56	none	-	-	Average (of DGAC and PCC)	0
13+185	38535	Heavy trucks	-		120	-		56	none	-	-	Average (of DGAC and PCC)	0
13+185	38535	Buses	-		17	-		56	none	-	-	Average (of DGAC and PCC)	0
13+185	38535	Motorcycles	-		16	-		56	none	-	-	Average (of DGAC and PCC)	0
13+185	38535	Auxiliary Vehicle	-	-	-		56	none	-	-	Average (of DGAC and PCC)	0
14+121	*38535*	*Total*	-		*2569*	-	-	*none*	-	-	*Average (of DGAC and PCC)*	*0*
14+121	38535	Automobiles	-		1500	-		56	none	-	-	Average (of DGAC and PCC)	0
14+121	38535	Medium trucks	-		916	-		56	none	-	-	Average (of DGAC and PCC)	0
14+121	38535	Heavy trucks	-		120	-		56	none	-	-	Average (of DGAC and PCC)	0

14+121		38535	Buses	-		17	-		56	none	-	-	Average (of DGAC and PCC)	0
14+121		38535	Motorcycles	-		16	-		56	none	-	-	Average (of DGAC and PCC)	0
14+121		38535	Auxiliary Vehicle	-	-	-			56	none	-	-	Average (of DGAC and PCC)	0
14+203		*38535*	*Total*	-		*2569*	-	-		*none*	-	-	*Average (of DGAC and PCC)*	*0*
14+203		38535	Automobiles	-		1500	-		56	none	-	-	Average (of DGAC and PCC)	0
14+203		38535	Medium trucks	-		916	-		56	none	-	-	Average (of DGAC and PCC)	0
14+203		38535	Heavy trucks	-		120	-		56	none	-	-	Average (of DGAC and PCC)	0
14+203		38535	Buses	-		17	-		56	none	-	-	Average (of DGAC and PCC)	0
14+203		38535	Motorcycles	-		16	-		56	none	-	-	Average (of DGAC and PCC)	0
14+203		38535	Auxiliary Vehicle	-	-	-			56	none	-	-	Average (of DGAC and PCC)	0
14+325		*38535*	*Total*	-		*2569*	-	-		*none*	-	-	*Average (of DGAC and PCC)*	*0*
14+325		38535	Automobiles	-		1500	-		56	none	-	-	Average (of DGAC and PCC)	0
14+325		38535	Medium trucks	-		916	-		56	none	-	-	Average (of DGAC and PCC)	0
14+325		38535	Heavy trucks	-		120	-		56	none	-	-	Average (of DGAC and PCC)	0
14+325		38535	Buses	-		17	-		56	none	-	-	Average (of DGAC and PCC)	0
14+325		38535	Motorcycles	-		16	-		56	none	-	-	Average (of DGAC and PCC)	0
14+325		38535	Auxiliary Vehicle	-	-	-			56	none	-	-	Average (of DGAC and PCC)	0
14+463	-									-	-	-	-	-
0+000		*38535*	*Total*	-		*2569*	-	-		*none*	-	-	*Average (of DGAC and PCC)*	*0*
0+000		38535	Automobiles	-		1500	-		56	none	-	-	Average (of DGAC and PCC)	0
0+000		38535	Medium trucks	-		916	-		56	none	-	-	Average (of DGAC and PCC)	0
0+000		38535	Heavy trucks	-		120	-		56	none	-	-	Average (of DGAC and PCC)	0
0+000		38535	Buses	-		17	-		56	none	-	-	Average (of DGAC and PCC)	0
0+000		38535	Motorcycles	-		16	-		56	none	-	-	Average (of DGAC and PCC)	0
0+000		38535	Auxiliary Vehicle	-	-	-			56	none	-	-	Average (of DGAC and PCC)	0
Valley Mall SB	Traffic direction:	In entry direction												
10+304		*2055*	*Total*	-		*137*	-	-		*none*	-	-	*Average (of DGAC and PCC)*	*0*
10+304		2055	Automobiles	-		79	-		40	none	-	-	Average (of DGAC and PCC)	0
10+304		2055	Medium trucks	-		49	-		40	none	-	-	Average (of DGAC and PCC)	0
10+304		2055	Heavy trucks	-		7	-		40	none	-	-	Average (of DGAC and PCC)	0
10+304		2055	Buses	-		1	-		40	none	-	-	Average (of DGAC and PCC)	0
10+304		2055	Motorcycles	-		1	-		40	none	-	-	Average (of DGAC and PCC)	0
10+304		2055	Auxiliary Vehicle	-	-	-			40	none	-	-	Average (of DGAC and PCC)	0
10+931		*2055*	*Total*	-		*137*	-	-		*none*	-	-	*Average (of DGAC and PCC)*	*0*
10+931		2055	Automobiles	-		79	-		40	none	-	-	Average (of DGAC and PCC)	0
10+931		2055	Medium trucks	-		49	-		40	none	-	-	Average (of DGAC and PCC)	0
10+931		2055	Heavy trucks	-		7	-		40	none	-	-	Average (of DGAC and PCC)	0
10+931		2055	Buses	-		1	-		40	none	-	-	Average (of DGAC and PCC)	0
10+931		2055	Motorcycles	-		1	-		40	none	-	-	Average (of DGAC and PCC)	0
10+931		2055	Auxiliary Vehicle	-	-	-			40	none	-	-	Average (of DGAC and PCC)	0
11+490	-									-	-	-	-	-
Ramona Blvd EB	Traffic direction:	In entry direction												
10+304		*13065*	*Total*	-		*871*	-	-		*Traffic light*	*0*	-	*Average (of DGAC and PCC)*	*0*
10+304		13065	Automobiles	-		508	-		56	Traffic light	0	-	Average (of DGAC and PCC)	0
10+304		13065	Medium trucks	-		310	-		56	Traffic light	0	-	Average (of DGAC and PCC)	0
10+304		13065	Heavy trucks	-		41	-		56	Traffic light	0	-	Average (of DGAC and PCC)	0
10+304		13065	Buses	-		6	-		56	Traffic light	0	-	Average (of DGAC and PCC)	0
10+304		13065	Motorcycles	-		6	-		56	Traffic light	0	-	Average (of DGAC and PCC)	0
10+304		13065	Auxiliary Vehicle	-	-	-			56	Traffic light	0	-	Average (of DGAC and PCC)	0
11+003		*14790*	*Total*	-		*986*	-	-		*Traffic light*	*0*	-	*Average (of DGAC and PCC)*	*0*
11+003		14790	Automobiles	-		575	-		56	Traffic light	0	-	Average (of DGAC and PCC)	0
11+003		14790	Medium trucks	-		351	-		56	Traffic light	0	-	Average (of DGAC and PCC)	0
11+003		14790	Heavy trucks	-		46	-		56	Traffic light	0	-	Average (of DGAC and PCC)	0
11+003		14790	Buses	-		7	-		56	Traffic light	0	-	Average (of DGAC and PCC)	0
11+003		14790	Motorcycles	-		7	-		56	Traffic light	0	-	Average (of DGAC and PCC)	0
11+003		14790	Auxiliary Vehicle	-	-	-			56	Traffic light	0	-	Average (of DGAC and PCC)	0
11+209		*14790*	*Total*	-		*986*	-	-		*none*	-	-	*Average (of DGAC and PCC)*	*0*
11+209		14790	Automobiles	-		575	-		56	none	-	-	Average (of DGAC and PCC)	0
11+209		14790	Medium trucks	-		351	-		56	none	-	-	Average (of DGAC and PCC)	0
11+209		14790	Heavy trucks	-		46	-		56	none	-	-	Average (of DGAC and PCC)	0
11+209		14790	Buses	-		7	-		56	none	-	-	Average (of DGAC and PCC)	0

11+209		14790	Motorcycles	-		7	-		56	none	-	-	Average (of DGAC and PCC)	0
11+209		14790	Auxiliary Vehicle	-	-	-			56	none	-	-	Average (of DGAC and PCC)	0
11+417		*21480*	*Total*	-		*1432*	-	-		*Traffic light*	*0*	-	*Average (of DGAC and PCC)*	*0*
11+417		21480	Automobiles	-		836	-		56	Traffic light	0	-	Average (of DGAC and PCC)	0
11+417		21480	Medium trucks	-		510	-		56	Traffic light	0	-	Average (of DGAC and PCC)	0
11+417		21480	Heavy trucks	-		67	-		56	Traffic light	0	-	Average (of DGAC and PCC)	0
11+417		21480	Buses	-		10	-		56	Traffic light	0	-	Average (of DGAC and PCC)	0
11+417		21480	Motorcycles	-		9	-		56	Traffic light	0	-	Average (of DGAC and PCC)	0
11+417		21480	Auxiliary Vehicle	-	-	-			56	Traffic light	0	-	Average (of DGAC and PCC)	0
11+683		*21480*	*Total*	-		*1432*	-	-		*none*	-	-	*Average (of DGAC and PCC)*	*0*
11+683		21480	Automobiles	-		836	-		56	none	-	-	Average (of DGAC and PCC)	0
11+683		21480	Medium trucks	-		510	-		56	none	-	-	Average (of DGAC and PCC)	0
11+683		21480	Heavy trucks	-		67	-		56	none	-	-	Average (of DGAC and PCC)	0
11+683		21480	Buses	-		10	-		56	none	-	-	Average (of DGAC and PCC)	0
11+683		21480	Motorcycles	-		9	-		56	none	-	-	Average (of DGAC and PCC)	0
11+683		21480	Auxiliary Vehicle	-	-	-			56	none	-	-	Average (of DGAC and PCC)	0
12+563		*31500*	*Total*	-		*2100*	-	-		*Traffic light*	*0*	-	*Average (of DGAC and PCC)*	*0*
12+563		31500	Automobiles	-		1226	-		56	Traffic light	0	-	Average (of DGAC and PCC)	0
12+563		31500	Medium trucks	-		749	-		56	Traffic light	0	-	Average (of DGAC and PCC)	0
12+563		31500	Heavy trucks	-		98	-		56	Traffic light	0	-	Average (of DGAC and PCC)	0
12+563		31500	Buses	-		14	-		56	Traffic light	0	-	Average (of DGAC and PCC)	0
12+563		31500	Motorcycles	-		13	-		56	Traffic light	0	-	Average (of DGAC and PCC)	0
12+563		31500	Auxiliary Vehicle	-	-	-			56	Traffic light	0	-	Average (of DGAC and PCC)	0
14+595		*34035*	*Total*	-		*2269*	-	-		*Traffic light*	*0*	-	*Average (of DGAC and PCC)*	*0*
14+595		34035	Automobiles	-		1325	-		56	Traffic light	0	-	Average (of DGAC and PCC)	0
14+595		34035	Medium trucks	-		809	-		56	Traffic light	0	-	Average (of DGAC and PCC)	0
14+595		34035	Heavy trucks	-		106	-		56	Traffic light	0	-	Average (of DGAC and PCC)	0
14+595		34035	Buses	-		15	-		56	Traffic light	0	-	Average (of DGAC and PCC)	0
14+595		34035	Motorcycles	-		14	-		56	Traffic light	0	-	Average (of DGAC and PCC)	0
14+595		34035	Auxiliary Vehicle	-	-	-			56	Traffic light	0	-	Average (of DGAC and PCC)	0
15+120		*33915*	*Total*	-		*2261*	-	-		*Traffic light*	*0*	-	*Average (of DGAC and PCC)*	*0*
15+120		33915	Automobiles	-		1320	-		56	Traffic light	0	-	Average (of DGAC and PCC)	0
15+120		33915	Medium trucks	-		806	-		56	Traffic light	0	-	Average (of DGAC and PCC)	0
15+120		33915	Heavy trucks	-		106	-		56	Traffic light	0	-	Average (of DGAC and PCC)	0
15+120		33915	Buses	-		15	-		56	Traffic light	0	-	Average (of DGAC and PCC)	0
15+120		33915	Motorcycles	-		14	-		56	Traffic light	0	-	Average (of DGAC and PCC)	0
15+120		33915	Auxiliary Vehicle	-	-	-			56	Traffic light	0	-	Average (of DGAC and PCC)	0
15+353	-									-	-	-	-	-
0+000		*33915*	*Total*	-		*2261*	-	-		*Traffic light*	*0*	-	*Average (of DGAC and PCC)*	*0*
0+000		33915	Automobiles	-		1320	-		56	Traffic light	0	-	Average (of DGAC and PCC)	0
0+000		33915	Medium trucks	-		806	-		56	Traffic light	0	-	Average (of DGAC and PCC)	0
0+000		33915	Heavy trucks	-		106	-		56	Traffic light	0	-	Average (of DGAC and PCC)	0
0+000		33915	Buses	-		15	-		56	Traffic light	0	-	Average (of DGAC and PCC)	0
0+000		33915	Motorcycles	-		14	-		56	Traffic light	0	-	Average (of DGAC and PCC)	0
0+000		33915	Auxiliary Vehicle	-	-	-			56	Traffic light	0	-	Average (of DGAC and PCC)	0
Ramona Blvd WB	Traffic direction:	In entry direction												
10+304		*32385*	*Total*	-		*2159*	-	-		*none*	-	-	*Average (of DGAC and PCC)*	*0*
10+304		32385	Automobiles	-		1260	-		56	none	-	-	Average (of DGAC and PCC)	0
10+304		32385	Medium trucks	-		769	-		56	none	-	-	Average (of DGAC and PCC)	0
10+304		32385	Heavy trucks	-		101	-		56	none	-	-	Average (of DGAC and PCC)	0
10+304		32385	Buses	-		15	-		56	none	-	-	Average (of DGAC and PCC)	0
10+304		32385	Motorcycles	-		14	-		56	none	-	-	Average (of DGAC and PCC)	0
10+304		32385	Auxiliary Vehicle	-	-	-			56	none	-	-	Average (of DGAC and PCC)	0
10+516		*32385*	*Total*	-		*2159*	-	-		*Traffic light*	*0*	-	*Average (of DGAC and PCC)*	*0*
10+516		32385	Automobiles	-		1260	-		56	Traffic light	0	-	Average (of DGAC and PCC)	0
10+516		32385	Medium trucks	-		769	-		56	Traffic light	0	-	Average (of DGAC and PCC)	0
10+516		32385	Heavy trucks	-		101	-		56	Traffic light	0	-	Average (of DGAC and PCC)	0
10+516		32385	Buses	-		15	-		56	Traffic light	0	-	Average (of DGAC and PCC)	0
10+516		32385	Motorcycles	-		14	-		56	Traffic light	0	-	Average (of DGAC and PCC)	0
10+516		32385	Auxiliary Vehicle	-	-	-			56	Traffic light	0	-	Average (of DGAC and PCC)	0
11+050		*30975*	*Total*	-		*2065*	-	-		*Traffic light*	*0*	-	*Average (of DGAC and PCC)*	*0*

11+050	30975	Automobiles	-	1205	-		56	Traffic light	0	-	Average (of DGAC and PCC)		0
11+050	30975	Medium trucks	-	736	-		56	Traffic light	0	-	Average (of DGAC and PCC)		0
11+050	30975	Heavy trucks	-	97	-		56	Traffic light	0	-	Average (of DGAC and PCC)		0
11+050	30975	Buses	-	14	-		56	Traffic light	0	-	Average (of DGAC and PCC)		0
11+050	30975	Motorcycles	-	13	-		56	Traffic light	0	-	Average (of DGAC and PCC)		0
11+050	30975	Auxiliary Vehicle	-	-	-	-	56	Traffic light	0	-	Average (of DGAC and PCC)		0
13+093	*25965*	*Total*	-	*1731*	-	-		*Traffic light*	*0*	-	*Average (of DGAC and PCC)*		*0*
13+093	25965	Automobiles	-	1010	-		56	Traffic light	0	-	Average (of DGAC and PCC)		0
13+093	25965	Medium trucks	-	617	-		56	Traffic light	0	-	Average (of DGAC and PCC)		0
13+093	25965	Heavy trucks	-	81	-		56	Traffic light	0	-	Average (of DGAC and PCC)		0
13+093	25965	Buses	-	12	-		56	Traffic light	0	-	Average (of DGAC and PCC)		0
13+093	25965	Motorcycles	-	11	-		56	Traffic light	0	-	Average (of DGAC and PCC)		0
13+093	25965	Auxiliary Vehicle	-	-	-	-	56	Traffic light	0	-	Average (of DGAC and PCC)		0
13+951	*25965*	*Total*	-	*1731*	-	-		*none*	-	-	*Average (of DGAC and PCC)*		*0*
13+951	25965	Automobiles	-	1010	-		56	none	-	-	Average (of DGAC and PCC)		0
13+951	25965	Medium trucks	-	617	-		56	none	-	-	Average (of DGAC and PCC)		0
13+951	25965	Heavy trucks	-	81	-		56	none	-	-	Average (of DGAC and PCC)		0
13+951	25965	Buses	-	12	-		56	none	-	-	Average (of DGAC and PCC)		0
13+951	25965	Motorcycles	-	11	-		56	none	-	-	Average (of DGAC and PCC)		0
13+951	25965	Auxiliary Vehicle	-	-	-	-	56	none	-	-	Average (of DGAC and PCC)		0
14+222	*15780*	*Total*	-	*1052*	-	-		*Traffic light*	*0*	-	*Average (of DGAC and PCC)*		*0*
14+222	15780	Automobiles	-	614	-		56	Traffic light	0	-	Average (of DGAC and PCC)		0
14+222	15780	Medium trucks	-	375	-		56	Traffic light	0	-	Average (of DGAC and PCC)		0
14+222	15780	Heavy trucks	-	49	-		56	Traffic light	0	-	Average (of DGAC and PCC)		0
14+222	15780	Buses	-	7	-		56	Traffic light	0	-	Average (of DGAC and PCC)		0
14+222	15780	Motorcycles	-	7	-		56	Traffic light	0	-	Average (of DGAC and PCC)		0
14+222	15780	Auxiliary Vehicle	-	-	-	-	56	Traffic light	0	-	Average (of DGAC and PCC)		0
14+437	*15705*	*Total*	-	*1047*	-	-		*none*	-	-	*Average (of DGAC and PCC)*		*0*
14+437	15705	Automobiles	-	611	-		56	none	-	-	Average (of DGAC and PCC)		0
14+437	15705	Medium trucks	-	373	-		56	none	-	-	Average (of DGAC and PCC)		0
14+437	15705	Heavy trucks	-	49	-		56	none	-	-	Average (of DGAC and PCC)		0
14+437	15705	Buses	-	7	-		56	none	-	-	Average (of DGAC and PCC)		0
14+437	15705	Motorcycles	-	7	-		56	none	-	-	Average (of DGAC and PCC)		0
14+437	15705	Auxiliary Vehicle	-	-	-	-	56	none	-	-	Average (of DGAC and PCC)		0
14+633	*15075*	*Total*	-	*1005*	-	-		*Traffic light*	*0*	-	*Average (of DGAC and PCC)*		*0*
14+633	15075	Automobiles	-	586	-		56	Traffic light	0	-	Average (of DGAC and PCC)		0
14+633	15075	Medium trucks	-	358	-		56	Traffic light	0	-	Average (of DGAC and PCC)		0
14+633	15075	Heavy trucks	-	47	-		56	Traffic light	0	-	Average (of DGAC and PCC)		0
14+633	15075	Buses	-	7	-		56	Traffic light	0	-	Average (of DGAC and PCC)		0
14+633	15075	Motorcycles	-	7	-		56	Traffic light	0	-	Average (of DGAC and PCC)		0
14+633	15075	Auxiliary Vehicle	-	-	-	-	56	Traffic light	0	-	Average (of DGAC and PCC)		0
15+348	-							-	-	-	-	-	
0+000	*15945*	*Total*	-	*1063*	-	-		*Traffic light*	*0*	-	*Average (of DGAC and PCC)*		*0*
0+000	15945	Automobiles	-	620	-		56	Traffic light	0	-	Average (of DGAC and PCC)		0
0+000	15945	Medium trucks	-	379	-		56	Traffic light	0	-	Average (of DGAC and PCC)		0
0+000	15945	Heavy trucks	-	50	-		56	Traffic light	0	-	Average (of DGAC and PCC)		0
0+000	15945	Buses	-	7	-		56	Traffic light	0	-	Average (of DGAC and PCC)		0
0+000	15945	Motorcycles	-	7	-		56	Traffic light	0	-	Average (of DGAC and PCC)		0
0+000	15945	Auxiliary Vehicle	-	-	-	-	56	Traffic light	0	-	Average (of DGAC and PCC)		0
Peck Rd SB	Traffic direction:	In entry direction											
10+304	*37350*	*Total*	-	*2490*	-	-		*none*	-	-	*Average (of DGAC and PCC)*		*0*
10+304	37350	Automobiles	-	1453	-		56	none	-	-	Average (of DGAC and PCC)		0
10+304	37350	Medium trucks	-	887	-		56	none	-	-	Average (of DGAC and PCC)		0
10+304	37350	Heavy trucks	-	117	-		56	none	-	-	Average (of DGAC and PCC)		0
10+304	37350	Buses	-	17	-		56	none	-	-	Average (of DGAC and PCC)		0
10+304	37350	Motorcycles	-	16	-		56	none	-	-	Average (of DGAC and PCC)		0
10+304	37350	Auxiliary Vehicle	-	-	-	-	56	none	-	-	Average (of DGAC and PCC)		0
10+796	*37350*	*Total*	-	*2490*	-	-		*Traffic light*	*0*	-	*Average (of DGAC and PCC)*		*0*
10+796	37350	Automobiles	-	1453	-		56	Traffic light	0	-	Average (of DGAC and PCC)		0
10+796	37350	Medium trucks	-	887	-		56	Traffic light	0	-	Average (of DGAC and PCC)		0
10+796	37350	Heavy trucks	-	117	-		56	Traffic light	0	-	Average (of DGAC and PCC)		0

10+796		37350	Buses	-		17	-		56	Traffic light	0	-	Average (of DGAC and PCC)	0
10+796		37350	Motorcycles	-		16	-		56	Traffic light	0	-	Average (of DGAC and PCC)	0
10+796		37350	Auxiliary Vehicle	-	-	-			56	Traffic light	0	-	Average (of DGAC and PCC)	0
13+264		*42600*	*Total*	-		*2840*	-	-		*Traffic light*	*0*	-	*Average (of DGAC and PCC)*	*0*
13+264		42600	Automobiles	-		1658	-		56	Traffic light	0	-	Average (of DGAC and PCC)	0
13+264		42600	Medium trucks	-		1012	-		56	Traffic light	0	-	Average (of DGAC and PCC)	0
13+264		42600	Heavy trucks	-		133	-		56	Traffic light	0	-	Average (of DGAC and PCC)	0
13+264		42600	Buses	-		19	-		56	Traffic light	0	-	Average (of DGAC and PCC)	0
13+264		42600	Motorcycles	-		18	-		56	Traffic light	0	-	Average (of DGAC and PCC)	0
13+264		42600	Auxiliary Vehicle	-	-	-			56	Traffic light	0	-	Average (of DGAC and PCC)	0
13+395		*42600*	*Total*	-		*2840*	-	-		*none*	-	-	*Average (of DGAC and PCC)*	*0*
13+395		42600	Automobiles	-		1658	-		56	none	-	-	Average (of DGAC and PCC)	0
13+395		42600	Medium trucks	-		1012	-		56	none	-	-	Average (of DGAC and PCC)	0
13+395		42600	Heavy trucks	-		133	-		56	none	-	-	Average (of DGAC and PCC)	0
13+395		42600	Buses	-		19	-		56	none	-	-	Average (of DGAC and PCC)	0
13+395		42600	Motorcycles	-		18	-		56	none	-	-	Average (of DGAC and PCC)	0
13+395		42600	Auxiliary Vehicle	-	-	-			56	none	-	-	Average (of DGAC and PCC)	0
13+528		*42600*	*Total*	-		*2840*	-	-		*none*	-	-	*Average (of DGAC and PCC)*	*0*
13+528		42600	Automobiles	-		1658	-		56	none	-	-	Average (of DGAC and PCC)	0
13+528		42600	Medium trucks	-		1012	-		56	none	-	-	Average (of DGAC and PCC)	0
13+528		42600	Heavy trucks	-		133	-		56	none	-	-	Average (of DGAC and PCC)	0
13+528		42600	Buses	-		19	-		56	none	-	-	Average (of DGAC and PCC)	0
13+528		42600	Motorcycles	-		18	-		56	none	-	-	Average (of DGAC and PCC)	0
13+528		42600	Auxiliary Vehicle	-	-	-			56	none	-	-	Average (of DGAC and PCC)	0
14+172		*48645*	*Total*	-		*3243*	-	-		*Traffic light*	*0*	-	*Average (of DGAC and PCC)*	*0*
14+172		48645	Automobiles	-		1893	-		56	Traffic light	0	-	Average (of DGAC and PCC)	0
14+172		48645	Medium trucks	-		1156	-		56	Traffic light	0	-	Average (of DGAC and PCC)	0
14+172		48645	Heavy trucks	-		152	-		56	Traffic light	0	-	Average (of DGAC and PCC)	0
14+172		48645	Buses	-		22	-		56	Traffic light	0	-	Average (of DGAC and PCC)	0
14+172		48645	Motorcycles	-		20	-		56	Traffic light	0	-	Average (of DGAC and PCC)	0
14+172		48645	Auxiliary Vehicle	-	-	-			56	Traffic light	0	-	Average (of DGAC and PCC)	0
14+486		*48645*	*Total*	-		*3243*	-	-		*none*	-	-	*Average (of DGAC and PCC)*	*0*
14+486		48645	Automobiles	-		1893	-		56	none	-	-	Average (of DGAC and PCC)	0
14+486		48645	Medium trucks	-		1156	-		56	none	-	-	Average (of DGAC and PCC)	0
14+486		48645	Heavy trucks	-		152	-		56	none	-	-	Average (of DGAC and PCC)	0
14+486		48645	Buses	-		22	-		56	none	-	-	Average (of DGAC and PCC)	0
14+486		48645	Motorcycles	-		20	-		56	none	-	-	Average (of DGAC and PCC)	0
14+486		48645	Auxiliary Vehicle	-	-	-			56	none	-	-	Average (of DGAC and PCC)	0
14+669		*48645*	*Total*	-		*3243*	-	-		*none*	-	-	*Average (of DGAC and PCC)*	*0*
14+669		48645	Automobiles	-		1893	-		56	none	-	-	Average (of DGAC and PCC)	0
14+669		48645	Medium trucks	-		1156	-		56	none	-	-	Average (of DGAC and PCC)	0
14+669		48645	Heavy trucks	-		152	-		56	none	-	-	Average (of DGAC and PCC)	0
14+669		48645	Buses	-		22	-		56	none	-	-	Average (of DGAC and PCC)	0
14+669		48645	Motorcycles	-		20	-		56	none	-	-	Average (of DGAC and PCC)	0
14+669		48645	Auxiliary Vehicle	-	-	-			56	none	-	-	Average (of DGAC and PCC)	0
14+834		*48645*	*Total*	-		*3243*	-	-		*none*	-	-	*Average (of DGAC and PCC)*	*0*
14+834		48645	Automobiles	-		1893	-		56	none	-	-	Average (of DGAC and PCC)	0
14+834		48645	Medium trucks	-		1156	-		56	none	-	-	Average (of DGAC and PCC)	0
14+834		48645	Heavy trucks	-		152	-		56	none	-	-	Average (of DGAC and PCC)	0
14+834		48645	Buses	-		22	-		56	none	-	-	Average (of DGAC and PCC)	0
14+834		48645	Motorcycles	-		20	-		56	none	-	-	Average (of DGAC and PCC)	0
14+834		48645	Auxiliary Vehicle	-	-	-			56	none	-	-	Average (of DGAC and PCC)	0
15+091		*26280*	*Total*	-		*1752*	-	-		*Traffic light*	*0*	-	*Average (of DGAC and PCC)*	*0*
15+091		26280	Automobiles	-		1023	-		56	Traffic light	0	-	Average (of DGAC and PCC)	0
15+091		26280	Medium trucks	-		624	-		56	Traffic light	0	-	Average (of DGAC and PCC)	0
15+091		26280	Heavy trucks	-		82	-		56	Traffic light	0	-	Average (of DGAC and PCC)	0
15+091		26280	Buses	-		12	-		56	Traffic light	0	-	Average (of DGAC and PCC)	0
15+091		26280	Motorcycles	-		11	-		56	Traffic light	0	-	Average (of DGAC and PCC)	0
15+091		26280	Auxiliary Vehicle	-	-	-			56	Traffic light	0	-	Average (of DGAC and PCC)	0
15+669	-									-	-	-	-	-
0+000		*26280*	*Total*	-		*1752*	-	-		*none*	-	-	*Average (of DGAC and PCC)*	*0*

0+000	26280	Automobiles	-	1023	-		56	none	-	-	Average (of DGAC and PCC)	0
0+000	26280	Medium trucks	-	624	-		56	none	-	-	Average (of DGAC and PCC)	0
0+000	26280	Heavy trucks	-	82	-		56	none	-	-	Average (of DGAC and PCC)	0
0+000	26280	Buses	-	12	-		56	none	-	-	Average (of DGAC and PCC)	0
0+000	26280	Motorcycles	-	11	-		56	none	-	-	Average (of DGAC and PCC)	0
0+000	26280	Auxiliary Vehicle	-	-	-	-	56	none	-	-	Average (of DGAC and PCC)	0
Peck Rd NB	Traffic direction:	In entry direction										
10+304	*32610*	*Total*	-	*2174*	-	-		*none*	-	-	*Average (of DGAC and PCC)*	*0*
10+304	32610	Automobiles	-	1268	-		56	none	-	-	Average (of DGAC and PCC)	0
10+304	32610	Medium trucks	-	775	-		56	none	-	-	Average (of DGAC and PCC)	0
10+304	32610	Heavy trucks	-	102	-		56	none	-	-	Average (of DGAC and PCC)	0
10+304	32610	Buses	-	15	-		56	none	-	-	Average (of DGAC and PCC)	0
10+304	32610	Motorcycles	-	14	-		56	none	-	-	Average (of DGAC and PCC)	0
10+304	32610	Auxiliary Vehicle	-	-	-	-	56	none	-	-	Average (of DGAC and PCC)	0
10+866	*32610*	*Total*	-	*2174*	-	-		*Traffic light*	*0*	-	*Average (of DGAC and PCC)*	*0*
10+866	32610	Automobiles	-	1268	-		56	Traffic light	0	-	Average (of DGAC and PCC)	0
10+866	32610	Medium trucks	-	775	-		56	Traffic light	0	-	Average (of DGAC and PCC)	0
10+866	32610	Heavy trucks	-	102	-		56	Traffic light	0	-	Average (of DGAC and PCC)	0
10+866	32610	Buses	-	15	-		56	Traffic light	0	-	Average (of DGAC and PCC)	0
10+866	32610	Motorcycles	-	14	-		56	Traffic light	0	-	Average (of DGAC and PCC)	0
10+866	32610	Auxiliary Vehicle	-	-	-	-	56	Traffic light	0	-	Average (of DGAC and PCC)	0
11+164	*32610*	*Total*	-	*2174*	-	-		*none*	-	-	*Average (of DGAC and PCC)*	*0*
11+164	32610	Automobiles	-	1268	-		56	none	-	-	Average (of DGAC and PCC)	0
11+164	32610	Medium trucks	-	775	-		56	none	-	-	Average (of DGAC and PCC)	0
11+164	32610	Heavy trucks	-	102	-		56	none	-	-	Average (of DGAC and PCC)	0
11+164	32610	Buses	-	15	-		56	none	-	-	Average (of DGAC and PCC)	0
11+164	32610	Motorcycles	-	14	-		56	none	-	-	Average (of DGAC and PCC)	0
11+164	32610	Auxiliary Vehicle	-	-	-	-	56	none	-	-	Average (of DGAC and PCC)	0
11+298	*32610*	*Total*	-	*2174*	-	-		*none*	-	-	*Average (of DGAC and PCC)*	*0*
11+298	32610	Automobiles	-	1268	-		56	none	-	-	Average (of DGAC and PCC)	0
11+298	32610	Medium trucks	-	775	-		56	none	-	-	Average (of DGAC and PCC)	0
11+298	32610	Heavy trucks	-	102	-		56	none	-	-	Average (of DGAC and PCC)	0
11+298	32610	Buses	-	15	-		56	none	-	-	Average (of DGAC and PCC)	0
11+298	32610	Motorcycles	-	14	-		56	none	-	-	Average (of DGAC and PCC)	0
11+298	32610	Auxiliary Vehicle	-	-	-	-	56	none	-	-	Average (of DGAC and PCC)	0
11+487	*32610*	*Total*	-	*2174*	-	-		*none*	-	-	*Average (of DGAC and PCC)*	*0*
11+487	32610	Automobiles	-	1268	-		56	none	-	-	Average (of DGAC and PCC)	0
11+487	32610	Medium trucks	-	775	-		56	none	-	-	Average (of DGAC and PCC)	0
11+487	32610	Heavy trucks	-	102	-		56	none	-	-	Average (of DGAC and PCC)	0
11+487	32610	Buses	-	15	-		56	none	-	-	Average (of DGAC and PCC)	0
11+487	32610	Motorcycles	-	14	-		56	none	-	-	Average (of DGAC and PCC)	0
11+487	32610	Auxiliary Vehicle	-	-	-	-	56	none	-	-	Average (of DGAC and PCC)	0
11+756	*49410*	*Total*	-	*3294*	-	-		*Traffic light*	*0*	-	*Average (of DGAC and PCC)*	*0*
11+756	49410	Automobiles	-	1923	-		56	Traffic light	0	-	Average (of DGAC and PCC)	0
11+756	49410	Medium trucks	-	1174	-		56	Traffic light	0	-	Average (of DGAC and PCC)	0
11+756	49410	Heavy trucks	-	154	-		56	Traffic light	0	-	Average (of DGAC and PCC)	0
11+756	49410	Buses	-	22	-		56	Traffic light	0	-	Average (of DGAC and PCC)	0
11+756	49410	Motorcycles	-	21	-		56	Traffic light	0	-	Average (of DGAC and PCC)	0
11+756	49410	Auxiliary Vehicle	-	-	-	-	56	Traffic light	0	-	Average (of DGAC and PCC)	0
12+431	*49410*	*Total*	-	*3294*	-	-		*none*	-	-	*Average (of DGAC and PCC)*	*0*
12+431	49410	Automobiles	-	1923	-		56	none	-	-	Average (of DGAC and PCC)	0
12+431	49410	Medium trucks	-	1174	-		56	none	-	-	Average (of DGAC and PCC)	0
12+431	49410	Heavy trucks	-	154	-		56	none	-	-	Average (of DGAC and PCC)	0
12+431	49410	Buses	-	22	-		56	none	-	-	Average (of DGAC and PCC)	0
12+431	49410	Motorcycles	-	21	-		56	none	-	-	Average (of DGAC and PCC)	0
12+431	49410	Auxiliary Vehicle	-	-	-	-	56	none	-	-	Average (of DGAC and PCC)	0
12+568	*49410*	*Total*	-	*3294*	-	-		*none*	-	-	*Average (of DGAC and PCC)*	*0*
12+568	49410	Automobiles	-	1923	-		56	none	-	-	Average (of DGAC and PCC)	0
12+568	49410	Medium trucks	-	1174	-		56	none	-	-	Average (of DGAC and PCC)	0
12+568	49410	Heavy trucks	-	154	-		56	none	-	-	Average (of DGAC and PCC)	0
12+568	49410	Buses	-	22	-		56	none	-	-	Average (of DGAC and PCC)	0

12+568	49410	Motorcycles	-	21	-	56	none	-	-	Average (of DGAC and PCC)	0
12+568	49410	Auxiliary Vehicle	-	-	-	56	none	-	-	Average (of DGAC and PCC)	0
12+697	*47235*	*Total*	-	*3149*	-	-	*Traffic light*	*0*	-	*Average (of DGAC and PCC)*	*0*
12+697	47235	Automobiles	-	1838	-	56	Traffic light	0	-	Average (of DGAC and PCC)	0
12+697	47235	Medium trucks	-	1123	-	56	Traffic light	0	-	Average (of DGAC and PCC)	0
12+697	47235	Heavy trucks	-	147	-	56	Traffic light	0	-	Average (of DGAC and PCC)	0
12+697	47235	Buses	-	21	-	56	Traffic light	0	-	Average (of DGAC and PCC)	0
12+697	47235	Motorcycles	-	20	-	56	Traffic light	0	-	Average (of DGAC and PCC)	0
12+697	47235	Auxiliary Vehicle	-	-	-	56	Traffic light	0	-	Average (of DGAC and PCC)	0
15+162	*34530*	*Total*	-	*2302*	-	-	*Traffic light*	*0*	-	*Average (of DGAC and PCC)*	*0*
15+162	34530	Automobiles	-	1343	-	56	Traffic light	0	-	Average (of DGAC and PCC)	0
15+162	34530	Medium trucks	-	820	-	56	Traffic light	0	-	Average (of DGAC and PCC)	0
15+162	34530	Heavy trucks	-	108	-	56	Traffic light	0	-	Average (of DGAC and PCC)	0
15+162	34530	Buses	-	16	-	56	Traffic light	0	-	Average (of DGAC and PCC)	0
15+162	34530	Motorcycles	-	15	-	56	Traffic light	0	-	Average (of DGAC and PCC)	0
15+162	34530	Auxiliary Vehicle	-	-	-	56	Traffic light	0	-	Average (of DGAC and PCC)	0
15+669	-						-	-	-	-	-
0+000	*34530*	*Total*	-	*2302*	-	-	*none*	-	-	*Average (of DGAC and PCC)*	*0*
0+000	34530	Automobiles	-	1343	-	56	none	-	-	Average (of DGAC and PCC)	0
0+000	34530	Medium trucks	-	820	-	56	none	-	-	Average (of DGAC and PCC)	0
0+000	34530	Heavy trucks	-	108	-	56	none	-	-	Average (of DGAC and PCC)	0
0+000	34530	Buses	-	16	-	56	none	-	-	Average (of DGAC and PCC)	0
0+000	34530	Motorcycles	-	15	-	56	none	-	-	Average (of DGAC and PCC)	0
0+000	34530	Auxiliary Vehicle	-	-	-	56	none	-	-	Average (of DGAC and PCC)	0
Roseglen St SB	Traffic direction:	In entry direction									
10+304	*1845*	*Total*	-	*123*	-	-	*none*	-	-	*Average (of DGAC and PCC)*	*0*
10+304	1845	Automobiles	-	71	-	48	none	-	-	Average (of DGAC and PCC)	0
10+304	1845	Medium trucks	-	44	-	48	none	-	-	Average (of DGAC and PCC)	0
10+304	1845	Heavy trucks	-	6	-	48	none	-	-	Average (of DGAC and PCC)	0
10+304	1845	Buses	-	1	-	48	none	-	-	Average (of DGAC and PCC)	0
10+304	1845	Motorcycles	-	1	-	48	none	-	-	Average (of DGAC and PCC)	0
10+304	1845	Auxiliary Vehicle	-	-	-	48	none	-	-	Average (of DGAC and PCC)	0
10+862	*1845*	*Total*	-	*123*	-	-	*none*	-	-	*Average (of DGAC and PCC)*	*0*
10+862	1845	Automobiles	-	71	-	48	none	-	-	Average (of DGAC and PCC)	0
10+862	1845	Medium trucks	-	44	-	48	none	-	-	Average (of DGAC and PCC)	0
10+862	1845	Heavy trucks	-	6	-	48	none	-	-	Average (of DGAC and PCC)	0
10+862	1845	Buses	-	1	-	48	none	-	-	Average (of DGAC and PCC)	0
10+862	1845	Motorcycles	-	1	-	48	none	-	-	Average (of DGAC and PCC)	0
10+862	1845	Auxiliary Vehicle	-	-	-	48	none	-	-	Average (of DGAC and PCC)	0
10+926	*1845*	*Total*	-	*123*	-	-	*none*	-	-	*Average (of DGAC and PCC)*	*0*
10+926	1845	Automobiles	-	71	-	48	none	-	-	Average (of DGAC and PCC)	0
10+926	1845	Medium trucks	-	44	-	48	none	-	-	Average (of DGAC and PCC)	0
10+926	1845	Heavy trucks	-	6	-	48	none	-	-	Average (of DGAC and PCC)	0
10+926	1845	Buses	-	1	-	48	none	-	-	Average (of DGAC and PCC)	0
10+926	1845	Motorcycles	-	1	-	48	none	-	-	Average (of DGAC and PCC)	0
10+926	1845	Auxiliary Vehicle	-	-	-	48	none	-	-	Average (of DGAC and PCC)	0
11+048	-						-	-	-	-	-
0+000	*1845*	*Total*	-	*123*	-	-	*Traffic light*	*0*	-	*Average (of DGAC and PCC)*	*0*
0+000	1845	Automobiles	-	71	-	48	Traffic light	0	-	Average (of DGAC and PCC)	0
0+000	1845	Medium trucks	-	44	-	48	Traffic light	0	-	Average (of DGAC and PCC)	0
0+000	1845	Heavy trucks	-	6	-	48	Traffic light	0	-	Average (of DGAC and PCC)	0
0+000	1845	Buses	-	1	-	48	Traffic light	0	-	Average (of DGAC and PCC)	0
0+000	1845	Motorcycles	-	1	-	48	Traffic light	0	-	Average (of DGAC and PCC)	0
0+000	1845	Auxiliary Vehicle	-	-	-	48	Traffic light	0	-	Average (of DGAC and PCC)	0
Roseglen St NB	Traffic direction:	In entry direction									
10+304	*5430*	*Total*	-	*362*	-	-	*Traffic light*	*0*	-	*Average (of DGAC and PCC)*	*0*
10+304	5430	Automobiles	-	210	-	48	Traffic light	0	-	Average (of DGAC and PCC)	0
10+304	5430	Medium trucks	-	129	-	48	Traffic light	0	-	Average (of DGAC and PCC)	0
10+304	5430	Heavy trucks	-	17	-	48	Traffic light	0	-	Average (of DGAC and PCC)	0
10+304	5430	Buses	-	3	-	48	Traffic light	0	-	Average (of DGAC and PCC)	0
10+304	5430	Motorcycles	-	3	-	48	Traffic light	0	-	Average (of DGAC and PCC)	0

10+304		5430	Auxiliary Vehicle	-	-	-		48	Traffic light	0	-	Average (of DGAC and PCC)	0
10+430		*5430*	*Total*	-		*362*	-	-	*none*	-	-	*Average (of DGAC and PCC)*	*0*
10+430		5430	Automobiles	-		210	-		48 none	-	-	Average (of DGAC and PCC)	0
10+430		5430	Medium trucks	-		129	-		48 none	-	-	Average (of DGAC and PCC)	0
10+430		5430	Heavy trucks	-		17	-		48 none	-	-	Average (of DGAC and PCC)	0
10+430		5430	Buses	-		3	-		48 none	-	-	Average (of DGAC and PCC)	0
10+430		5430	Motorcycles	-		3	-		48 none	-	-	Average (of DGAC and PCC)	0
10+430		5430	Auxiliary Vehicle	-	-	-		48	none	-	-	Average (of DGAC and PCC)	0
10+489		*5430*	*Total*	-		*362*	-	-	*none*	-	-	*Average (of DGAC and PCC)*	*0*
10+489		5430	Automobiles	-		210	-		48 none	-	-	Average (of DGAC and PCC)	0
10+489		5430	Medium trucks	-		129	-		48 none	-	-	Average (of DGAC and PCC)	0
10+489		5430	Heavy trucks	-		17	-		48 none	-	-	Average (of DGAC and PCC)	0
10+489		5430	Buses	-		3	-		48 none	-	-	Average (of DGAC and PCC)	0
10+489		5430	Motorcycles	-		3	-		48 none	-	-	Average (of DGAC and PCC)	0
10+489		5430	Auxiliary Vehicle	-	-	-		48	none	-	-	Average (of DGAC and PCC)	0
11+054	-								-	-	-	-	-
0+000		*5430*	*Total*	-		*362*	-	-	*none*	-	-	*Average (of DGAC and PCC)*	*0*
0+000		5430	Automobiles	-		210	-		48 none	-	-	Average (of DGAC and PCC)	0
0+000		5430	Medium trucks	-		129	-		48 none	-	-	Average (of DGAC and PCC)	0
0+000		5430	Heavy trucks	-		17	-		48 none	-	-	Average (of DGAC and PCC)	0
0+000		5430	Buses	-		3	-		48 none	-	-	Average (of DGAC and PCC)	0
0+000		5430	Motorcycles	-		3	-		48 none	-	-	Average (of DGAC and PCC)	0
0+000		5430	Auxiliary Vehicle	-	-	-		48	none	-	-	Average (of DGAC and PCC)	0
Roseglen St NB1	Traffic direction:	In entry direction											
10+304		*1845*	*Total*	-		*123*	-	-	*Traffic light*	*0*	-	*Average (of DGAC and PCC)*	*0*
10+304		1845	Automobiles	-		71	-		48 Traffic light	0	-	Average (of DGAC and PCC)	0
10+304		1845	Medium trucks	-		44	-		48 Traffic light	0	-	Average (of DGAC and PCC)	0
10+304		1845	Heavy trucks	-		6	-		48 Traffic light	0	-	Average (of DGAC and PCC)	0
10+304		1845	Buses	-		1	-		48 Traffic light	0	-	Average (of DGAC and PCC)	0
10+304		1845	Motorcycles	-		1	-		48 Traffic light	0	-	Average (of DGAC and PCC)	0
10+304		1845	Auxiliary Vehicle	-	-	-		48	Traffic light	0	-	Average (of DGAC and PCC)	0
10+644		*1845*	*Total*	-		*123*	-	-	*none*	-	-	*Average (of DGAC and PCC)*	*0*
10+644		1845	Automobiles	-		71	-		48 none	-	-	Average (of DGAC and PCC)	0
10+644		1845	Medium trucks	-		44	-		48 none	-	-	Average (of DGAC and PCC)	0
10+644		1845	Heavy trucks	-		6	-		48 none	-	-	Average (of DGAC and PCC)	0
10+644		1845	Buses	-		1	-		48 none	-	-	Average (of DGAC and PCC)	0
10+644		1845	Motorcycles	-		1	-		48 none	-	-	Average (of DGAC and PCC)	0
10+644		1845	Auxiliary Vehicle	-	-	-		48	none	-	-	Average (of DGAC and PCC)	0
10+734		*1845*	*Total*	-		*123*	-	-	*none*	-	-	*Average (of DGAC and PCC)*	*0*
10+734		1845	Automobiles	-		71	-		48 none	-	-	Average (of DGAC and PCC)	0
10+734		1845	Medium trucks	-		44	-		48 none	-	-	Average (of DGAC and PCC)	0
10+734		1845	Heavy trucks	-		6	-		48 none	-	-	Average (of DGAC and PCC)	0
10+734		1845	Buses	-		1	-		48 none	-	-	Average (of DGAC and PCC)	0
10+734		1845	Motorcycles	-		1	-		48 none	-	-	Average (of DGAC and PCC)	0
10+734		1845	Auxiliary Vehicle	-	-	-		48	none	-	-	Average (of DGAC and PCC)	0
11+141	-								-	-	-	-	-
0+000		*1845*	*Total*	-		*123*	-	-	*none*	-	-	*Average (of DGAC and PCC)*	*0*
0+000		1845	Automobiles	-		71	-		48 none	-	-	Average (of DGAC and PCC)	0
0+000		1845	Medium trucks	-		44	-		48 none	-	-	Average (of DGAC and PCC)	0
0+000		1845	Heavy trucks	-		6	-		48 none	-	-	Average (of DGAC and PCC)	0
0+000		1845	Buses	-		1	-		48 none	-	-	Average (of DGAC and PCC)	0
0+000		1845	Motorcycles	-		1	-		48 none	-	-	Average (of DGAC and PCC)	0
0+000		1845	Auxiliary Vehicle	-	-	-		48	none	-	-	Average (of DGAC and PCC)	0
Durfee Ave NB	Traffic direction:	In entry direction											
10+304		*5430*	*Total*	-		*362*	-	-	*none*	-	-	*Average (of DGAC and PCC)*	*0*
10+304		5430	Automobiles	-		210	-		48 none	-	-	Average (of DGAC and PCC)	0
10+304		5430	Medium trucks	-		129	-		48 none	-	-	Average (of DGAC and PCC)	0
10+304		5430	Heavy trucks	-		17	-		48 none	-	-	Average (of DGAC and PCC)	0
10+304		5430	Buses	-		3	-		48 none	-	-	Average (of DGAC and PCC)	0
10+304		5430	Motorcycles	-		3	-		48 none	-	-	Average (of DGAC and PCC)	0
10+304		5430	Auxiliary Vehicle	-	-	-		48	none	-	-	Average (of DGAC and PCC)	0

10+709		*5430*	*Total*	-	*362*	-	-	*none*	-	-	*Average (of DGAC and PCC)*	*0*
10+709		5430	Automobiles	-	210	-	48	none	-	-	Average (of DGAC and PCC)	0
10+709		5430	Medium trucks	-	129	-	48	none	-	-	Average (of DGAC and PCC)	0
10+709		5430	Heavy trucks	-	17	-	48	none	-	-	Average (of DGAC and PCC)	0
10+709		5430	Buses	-	3	-	48	none	-	-	Average (of DGAC and PCC)	0
10+709		5430	Motorcycles	-	3	-	48	none	-	-	Average (of DGAC and PCC)	0
10+709		5430	Auxiliary Vehicle	-	-	-	48	none	-	-	Average (of DGAC and PCC)	0
11+146	-							-	-	-	-	-
0+000		*5430*	*Total*	-	*362*	-	-	*Traffic light*	*0*	-	*Average (of DGAC and PCC)*	*0*
0+000		5430	Automobiles	-	210	-	48	Traffic light	0	-	Average (of DGAC and PCC)	0
0+000		5430	Medium trucks	-	129	-	48	Traffic light	0	-	Average (of DGAC and PCC)	0
0+000		5430	Heavy trucks	-	17	-	48	Traffic light	0	-	Average (of DGAC and PCC)	0
0+000		5430	Buses	-	3	-	48	Traffic light	0	-	Average (of DGAC and PCC)	0
0+000		5430	Motorcycles	-	3	-	48	Traffic light	0	-	Average (of DGAC and PCC)	0
0+000		5430	Auxiliary Vehicle	-	-	-	48	Traffic light	0	-	Average (of DGAC and PCC)	0
Durfee Ave SB (South)	Traffic direction:	In entry direction										
10+304		*7035*	*Total*	-	*469*	-	-	*none*	-	-	*Average (of DGAC and PCC)*	*0*
10+304		7035	Automobiles	-	273	-	40	none	-	-	Average (of DGAC and PCC)	0
10+304		7035	Medium trucks	-	167	-	40	none	-	-	Average (of DGAC and PCC)	0
10+304		7035	Heavy trucks	-	22	-	40	none	-	-	Average (of DGAC and PCC)	0
10+304		7035	Buses	-	4	-	40	none	-	-	Average (of DGAC and PCC)	0
10+304		7035	Motorcycles	-	3	-	40	none	-	-	Average (of DGAC and PCC)	0
10+304		7035	Auxiliary Vehicle	-	-	-	40	none	-	-	Average (of DGAC and PCC)	0
11+006	-							-	-	-	-	-
0+000		*7035*	*Total*	-	*469*	-	-	*none*	-	-	*Average (of DGAC and PCC)*	*0*
0+000		7035	Automobiles	-	273	-	40	none	-	-	Average (of DGAC and PCC)	0
0+000		7035	Medium trucks	-	167	-	40	none	-	-	Average (of DGAC and PCC)	0
0+000		7035	Heavy trucks	-	22	-	40	none	-	-	Average (of DGAC and PCC)	0
0+000		7035	Buses	-	4	-	40	none	-	-	Average (of DGAC and PCC)	0
0+000		7035	Motorcycles	-	3	-	40	none	-	-	Average (of DGAC and PCC)	0
0+000		7035	Auxiliary Vehicle	-	-	-	40	none	-	-	Average (of DGAC and PCC)	0
Durfee Ave NB (South)	Traffic direction:	In entry direction										
10+304	-							-	-	-	-	0
11+002	-							-	-	-	-	-
0+000	-							-	-	-	-	0
Gilman Rd SB	Traffic direction:	In entry direction										
10+304		*6570*	*Total*	-	*438*	-	-	*Traffic light*	*0*	-	*Average (of DGAC and PCC)*	*0*
10+304		6570	Automobiles	-	255	-	40	Traffic light	0	-	Average (of DGAC and PCC)	0
10+304		6570	Medium trucks	-	156	-	40	Traffic light	0	-	Average (of DGAC and PCC)	0
10+304		6570	Heavy trucks	-	21	-	40	Traffic light	0	-	Average (of DGAC and PCC)	0
10+304		6570	Buses	-	3	-	40	Traffic light	0	-	Average (of DGAC and PCC)	0
10+304		6570	Motorcycles	-	3	-	40	Traffic light	0	-	Average (of DGAC and PCC)	0
10+304		6570	Auxiliary Vehicle	-	-	-	40	Traffic light	0	-	Average (of DGAC and PCC)	0
11+254	-							-	-	-	-	-
0+000		*6570*	*Total*	-	*438*	-	-	*none*	-	-	*Average (of DGAC and PCC)*	*0*
0+000		6570	Automobiles	-	255	-	40	none	-	-	Average (of DGAC and PCC)	0
0+000		6570	Medium trucks	-	156	-	40	none	-	-	Average (of DGAC and PCC)	0
0+000		6570	Heavy trucks	-	21	-	40	none	-	-	Average (of DGAC and PCC)	0
0+000		6570	Buses	-	3	-	40	none	-	-	Average (of DGAC and PCC)	0
0+000		6570	Motorcycles	-	3	-	40	none	-	-	Average (of DGAC and PCC)	0
0+000		6570	Auxiliary Vehicle	-	-	-	40	none	-	-	Average (of DGAC and PCC)	0
Gilman Rd NB	Traffic direction:	In entry direction										
10+304		*2145*	*Total*	-	*143*	-	-	*none*	-	-	*Average (of DGAC and PCC)*	*0*
10+304		2145	Automobiles	-	83	-	40	none	-	-	Average (of DGAC and PCC)	0
10+304		2145	Medium trucks	-	51	-	40	none	-	-	Average (of DGAC and PCC)	0
10+304		2145	Heavy trucks	-	7	-	40	none	-	-	Average (of DGAC and PCC)	0
10+304		2145	Buses	-	1	-	40	none	-	-	Average (of DGAC and PCC)	0
10+304		2145	Motorcycles	-	1	-	40	none	-	-	Average (of DGAC and PCC)	0
10+304		2145	Auxiliary Vehicle	-	-	-	40	none	-	-	Average (of DGAC and PCC)	0
11+260	-							-	-	-	-	-
0+000		*2145*	*Total*	-	*143*	-	-	*Traffic light*	*0*	-	*Average (of DGAC and PCC)*	*0*

0+000	2145	Automobiles	-	83	-	40	Traffic light	0	-	Average (of DGAC and PCC)	0
0+000	2145	Medium trucks	-	51	-	40	Traffic light	0	-	Average (of DGAC and PCC)	0
0+000	2145	Heavy trucks	-	7	-	40	Traffic light	0	-	Average (of DGAC and PCC)	0
0+000	2145	Buses	-	1	-	40	Traffic light	0	-	Average (of DGAC and PCC)	0
0+000	2145	Motorcycles	-	1	-	40	Traffic light	0	-	Average (of DGAC and PCC)	0
0+000	2145	Auxiliary Vehicle	-	-	-	40	Traffic light	0	-	Average (of DGAC and PCC)	0
I-10 EB	Traffic direction:	In entry direction									
10+304	*121590*	*Total*	-	*8106*	-	-	*none*	-	-	*Average (of DGAC and PCC)*	*0*
10+304	121590	Automobiles	-	4733	-	105	none	-	-	Average (of DGAC and PCC)	0
10+304	121590	Medium trucks	-	2890	-	105	none	-	-	Average (of DGAC and PCC)	0
10+304	121590	Heavy trucks	-	379	-	105	none	-	-	Average (of DGAC and PCC)	0
10+304	121590	Buses	-	54	-	105	none	-	-	Average (of DGAC and PCC)	0
10+304	121590	Motorcycles	-	50	-	105	none	-	-	Average (of DGAC and PCC)	0
10+304	121590	Auxiliary Vehicle	-	-	-	105	none	-	-	Average (of DGAC and PCC)	0
12+635	*153255*	*Total*	-	*10217*	-	-	*none*	-	-	*Average (of DGAC and PCC)*	*0*
12+635	153255	Automobiles	-	5966	-	105	none	-	-	Average (of DGAC and PCC)	0
12+635	153255	Medium trucks	-	3643	-	105	none	-	-	Average (of DGAC and PCC)	0
12+635	153255	Heavy trucks	-	477	-	105	none	-	-	Average (of DGAC and PCC)	0
12+635	153255	Buses	-	68	-	105	none	-	-	Average (of DGAC and PCC)	0
12+635	153255	Motorcycles	-	63	-	105	none	-	-	Average (of DGAC and PCC)	0
12+635	153255	Auxiliary Vehicle	-	-	-	105	none	-	-	Average (of DGAC and PCC)	0
17+769	*116235*	*Total*	-	*7749*	-	-	*none*	-	-	*Average (of DGAC and PCC)*	*0*
17+769	116235	Automobiles	-	4524	-	105	none	-	-	Average (of DGAC and PCC)	0
17+769	116235	Medium trucks	-	2763	-	105	none	-	-	Average (of DGAC and PCC)	0
17+769	116235	Heavy trucks	-	362	-	105	none	-	-	Average (of DGAC and PCC)	0
17+769	116235	Buses	-	52	-	105	none	-	-	Average (of DGAC and PCC)	0
17+769	116235	Motorcycles	-	48	-	105	none	-	-	Average (of DGAC and PCC)	0
17+769	116235	Auxiliary Vehicle	-	-	-	105	none	-	-	Average (of DGAC and PCC)	0
18+525	*116235*	*Total*	-	*7749*	-	-	*none*	-	-	*Average (of DGAC and PCC)*	*0*
18+525	116235	Automobiles	-	4524	-	105	none	-	-	Average (of DGAC and PCC)	0
18+525	116235	Medium trucks	-	2763	-	105	none	-	-	Average (of DGAC and PCC)	0
18+525	116235	Heavy trucks	-	362	-	105	none	-	-	Average (of DGAC and PCC)	0
18+525	116235	Buses	-	52	-	105	none	-	-	Average (of DGAC and PCC)	0
18+525	116235	Motorcycles	-	48	-	105	none	-	-	Average (of DGAC and PCC)	0
18+525	116235	Auxiliary Vehicle	-	-	-	105	none	-	-	Average (of DGAC and PCC)	0
19+393	*116235*	*Total*	-	*7749*	-	-	*none*	-	-	*Average (of DGAC and PCC)*	*0*
19+393	116235	Automobiles	-	4524	-	105	none	-	-	Average (of DGAC and PCC)	0
19+393	116235	Medium trucks	-	2763	-	105	none	-	-	Average (of DGAC and PCC)	0
19+393	116235	Heavy trucks	-	362	-	105	none	-	-	Average (of DGAC and PCC)	0
19+393	116235	Buses	-	52	-	105	none	-	-	Average (of DGAC and PCC)	0
19+393	116235	Motorcycles	-	48	-	105	none	-	-	Average (of DGAC and PCC)	0
19+393	116235	Auxiliary Vehicle	-	-	-	105	none	-	-	Average (of DGAC and PCC)	0
20+123	-						-	-	-	-	-
I-10 WB	Traffic direction:	In entry direction									
10+304	*124620*	*Total*	-	*8308*	-	-	*none*	-	-	*Average (of DGAC and PCC)*	*0*
10+304	124620	Automobiles	-	4851	-	105	none	-	-	Average (of DGAC and PCC)	0
10+304	124620	Medium trucks	-	2962	-	105	none	-	-	Average (of DGAC and PCC)	0
10+304	124620	Heavy trucks	-	388	-	105	none	-	-	Average (of DGAC and PCC)	0
10+304	124620	Buses	-	55	-	105	none	-	-	Average (of DGAC and PCC)	0
10+304	124620	Motorcycles	-	52	-	105	none	-	-	Average (of DGAC and PCC)	0
10+304	124620	Auxiliary Vehicle	-	-	-	105	none	-	-	Average (of DGAC and PCC)	0
12+623	*132915*	*Total*	-	*8861*	-	-	*none*	-	-	*Average (of DGAC and PCC)*	*0*
12+623	132915	Automobiles	-	5174	-	105	none	-	-	Average (of DGAC and PCC)	0
12+623	132915	Medium trucks	-	3159	-	105	none	-	-	Average (of DGAC and PCC)	0
12+623	132915	Heavy trucks	-	414	-	105	none	-	-	Average (of DGAC and PCC)	0
12+623	132915	Buses	-	59	-	105	none	-	-	Average (of DGAC and PCC)	0
12+623	132915	Motorcycles	-	55	-	105	none	-	-	Average (of DGAC and PCC)	0
12+623	132915	Auxiliary Vehicle	-	-	-	105	none	-	-	Average (of DGAC and PCC)	0
15+597	*117060*	*Total*	-	*7804*	-	-	*none*	-	-	*Average (of DGAC and PCC)*	*0*
15+597	117060	Automobiles	-	4557	-	105	none	-	-	Average (of DGAC and PCC)	0
15+597	117060	Medium trucks	-	2782	-	105	none	-	-	Average (of DGAC and PCC)	0

15+597	117060	Heavy trucks	-	364	-	105	none	-	-	Average (of DGAC and PCC)	0
15+597	117060	Buses	-	52	-	105	none	-	-	Average (of DGAC and PCC)	0
15+597	117060	Motorcycles	-	49	-	105	none	-	-	Average (of DGAC and PCC)	0
15+597	117060	Auxiliary Vehicle	-	-	-	105	none	-	-	Average (of DGAC and PCC)	0
20+122	-						-	-	-	-	-
0+000	*117060*	*Total*	-	*7804*	-	-	*none*	-	-	*Average (of DGAC and PCC)*	*0*
0+000	117060	Automobiles	-	4557	-	105	none	-	-	Average (of DGAC and PCC)	0
0+000	117060	Medium trucks	-	2782	-	105	none	-	-	Average (of DGAC and PCC)	0
0+000	117060	Heavy trucks	-	364	-	105	none	-	-	Average (of DGAC and PCC)	0
0+000	117060	Buses	-	52	-	105	none	-	-	Average (of DGAC and PCC)	0
0+000	117060	Motorcycles	-	49	-	105	none	-	-	Average (of DGAC and PCC)	0
0+000	117060	Auxiliary Vehicle	-	-	-	105	none	-	-	Average (of DGAC and PCC)	0
Valley Blvd EB	Traffic direction:	In entry direction									
2+808	*41235*	*Total*	-	*2749*	-	-	*none*	-	-	*Average (of DGAC and PCC)*	*0*
2+808	41235	Automobiles	-	1604	-	56	none	-	-	Average (of DGAC and PCC)	0
2+808	41235	Medium trucks	-	980	-	56	none	-	-	Average (of DGAC and PCC)	0
2+808	41235	Heavy trucks	-	129	-	56	none	-	-	Average (of DGAC and PCC)	0
2+808	41235	Buses	-	19	-	56	none	-	-	Average (of DGAC and PCC)	0
2+808	41235	Motorcycles	-	17	-	56	none	-	-	Average (of DGAC and PCC)	0
2+808	41235	Auxiliary Vehicle	-	-	-	56	none	-	-	Average (of DGAC and PCC)	0
3+202	*41235*	*Total*	-	*2749*	-	-	*Traffic light*	*0*	-	*Average (of DGAC and PCC)*	*0*
3+202	41235	Automobiles	-	1604	-	56	Traffic light	0	-	Average (of DGAC and PCC)	0
3+202	41235	Medium trucks	-	980	-	56	Traffic light	0	-	Average (of DGAC and PCC)	0
3+202	41235	Heavy trucks	-	129	-	56	Traffic light	0	-	Average (of DGAC and PCC)	0
3+202	41235	Buses	-	19	-	56	Traffic light	0	-	Average (of DGAC and PCC)	0
3+202	41235	Motorcycles	-	17	-	56	Traffic light	0	-	Average (of DGAC and PCC)	0
3+202	41235	Auxiliary Vehicle	-	-	-	56	Traffic light	0	-	Average (of DGAC and PCC)	0
4+173	*37845*	*Total*	-	*2523*	-	-	*Traffic light*	*0*	-	*Average (of DGAC and PCC)*	*0*
4+173	37845	Automobiles	-	1473	-	56	Traffic light	0	-	Average (of DGAC and PCC)	0
4+173	37845	Medium trucks	-	899	-	56	Traffic light	0	-	Average (of DGAC and PCC)	0
4+173	37845	Heavy trucks	-	118	-	56	Traffic light	0	-	Average (of DGAC and PCC)	0
4+173	37845	Buses	-	17	-	56	Traffic light	0	-	Average (of DGAC and PCC)	0
4+173	37845	Motorcycles	-	16	-	56	Traffic light	0	-	Average (of DGAC and PCC)	0
4+173	37845	Auxiliary Vehicle	-	-	-	56	Traffic light	0	-	Average (of DGAC and PCC)	0
5+211	*27795*	*Total*	-	*1853*	-	-	*Traffic light*	*0*	-	*Average (of DGAC and PCC)*	*0*
5+211	27795	Automobiles	-	1081	-	56	Traffic light	0	-	Average (of DGAC and PCC)	0
5+211	27795	Medium trucks	-	660	-	56	Traffic light	0	-	Average (of DGAC and PCC)	0
5+211	27795	Heavy trucks	-	87	-	56	Traffic light	0	-	Average (of DGAC and PCC)	0
5+211	27795	Buses	-	13	-	56	Traffic light	0	-	Average (of DGAC and PCC)	0
5+211	27795	Motorcycles	-	12	-	56	Traffic light	0	-	Average (of DGAC and PCC)	0
5+211	27795	Auxiliary Vehicle	-	-	-	56	Traffic light	0	-	Average (of DGAC and PCC)	0
6+870	*27795*	*Total*	-	*1853*	-	-	*none*	-	-	*Average (of DGAC and PCC)*	*0*
6+870	27795	Automobiles	-	1081	-	56	none	-	-	Average (of DGAC and PCC)	0
6+870	27795	Medium trucks	-	660	-	56	none	-	-	Average (of DGAC and PCC)	0
6+870	27795	Heavy trucks	-	87	-	56	none	-	-	Average (of DGAC and PCC)	0
6+870	27795	Buses	-	13	-	56	none	-	-	Average (of DGAC and PCC)	0
6+870	27795	Motorcycles	-	12	-	56	none	-	-	Average (of DGAC and PCC)	0
6+870	27795	Auxiliary Vehicle	-	-	-	56	none	-	-	Average (of DGAC and PCC)	0
6+923	*39180*	*Total*	-	*2612*	-	-	*Traffic light*	*0*	-	*Average (of DGAC and PCC)*	*0*
6+923	39180	Automobiles	-	1524	-	56	Traffic light	0	-	Average (of DGAC and PCC)	0
6+923	39180	Medium trucks	-	931	-	56	Traffic light	0	-	Average (of DGAC and PCC)	0
6+923	39180	Heavy trucks	-	122	-	56	Traffic light	0	-	Average (of DGAC and PCC)	0
6+923	39180	Buses	-	18	-	56	Traffic light	0	-	Average (of DGAC and PCC)	0
6+923	39180	Motorcycles	-	17	-	56	Traffic light	0	-	Average (of DGAC and PCC)	0
6+923	39180	Auxiliary Vehicle	-	-	-	56	Traffic light	0	-	Average (of DGAC and PCC)	0
7+613	*38805*	*Total*	-	*2587*	-	-	*Traffic light*	*0*	-	*Average (of DGAC and PCC)*	*0*
7+613	38805	Automobiles	-	1510	-	56	Traffic light	0	-	Average (of DGAC and PCC)	0
7+613	38805	Medium trucks	-	922	-	56	Traffic light	0	-	Average (of DGAC and PCC)	0
7+613	38805	Heavy trucks	-	121	-	56	Traffic light	0	-	Average (of DGAC and PCC)	0
7+613	38805	Buses	-	18	-	56	Traffic light	0	-	Average (of DGAC and PCC)	0
7+613	38805	Motorcycles	-	16	-	56	Traffic light	0	-	Average (of DGAC and PCC)	0

7+613	38805	Auxiliary Vehicle	-	-	-		56	Traffic light	0	-	Average (of DGAC and PCC)	0
8+136	*38805*	*Total*	-		*2587*	-	-	*none*	-	-	*Average (of DGAC and PCC)*	*0*
8+136	38805	Automobiles	-		1510	-		56	none	-	-	Average (of DGAC and PCC)	0
8+136	38805	Medium trucks	-		922	-		56	none	-	-	Average (of DGAC and PCC)	0
8+136	38805	Heavy trucks	-		121	-		56	none	-	-	Average (of DGAC and PCC)	0
8+136	38805	Buses	-		18	-		56	none	-	-	Average (of DGAC and PCC)	0
8+136	38805	Motorcycles	-		16	-		56	none	-	-	Average (of DGAC and PCC)	0
8+136	38805	Auxiliary Vehicle	-	-	-			56	none	-	-	Average (of DGAC and PCC)	0
8+496	*38805*	*Total*	-		*2587*	-	-	*none*	-	-	*Average (of DGAC and PCC)*	*0*
8+496	38805	Automobiles	-		1510	-		56	none	-	-	Average (of DGAC and PCC)	0
8+496	38805	Medium trucks	-		922	-		56	none	-	-	Average (of DGAC and PCC)	0
8+496	38805	Heavy trucks	-		121	-		56	none	-	-	Average (of DGAC and PCC)	0
8+496	38805	Buses	-		18	-		56	none	-	-	Average (of DGAC and PCC)	0
8+496	38805	Motorcycles	-		16	-		56	none	-	-	Average (of DGAC and PCC)	0
8+496	38805	Auxiliary Vehicle	-	-	-			56	none	-	-	Average (of DGAC and PCC)	0
8+965	*38805*	*Total*	-		*2587*	-	-	*none*	-	-	*Average (of DGAC and PCC)*	*0*
8+965	38805	Automobiles	-		1510	-		40	none	-	-	Average (of DGAC and PCC)	0
8+965	38805	Medium trucks	-		922	-		40	none	-	-	Average (of DGAC and PCC)	0
8+965	38805	Heavy trucks	-		121	-		40	none	-	-	Average (of DGAC and PCC)	0
8+965	38805	Buses	-		18	-		40	none	-	-	Average (of DGAC and PCC)	0
8+965	38805	Motorcycles	-		16	-		40	none	-	-	Average (of DGAC and PCC)	0
8+965	38805	Auxiliary Vehicle	-	-	-			40	none	-	-	Average (of DGAC and PCC)	0
9+092	*30225*	*Total*	-		*2015*	-	-	*Traffic light*	*0*	-	*Average (of DGAC and PCC)*	*0*
9+092	30225	Automobiles	-		1176	-		56	Traffic light	0	-	Average (of DGAC and PCC)	0
9+092	30225	Medium trucks	-		718	-		56	Traffic light	0	-	Average (of DGAC and PCC)	0
9+092	30225	Heavy trucks	-		94	-		56	Traffic light	0	-	Average (of DGAC and PCC)	0
9+092	30225	Buses	-		14	-		56	Traffic light	0	-	Average (of DGAC and PCC)	0
9+092	30225	Motorcycles	-		13	-		56	Traffic light	0	-	Average (of DGAC and PCC)	0
9+092	30225	Auxiliary Vehicle	-	-	-			56	Traffic light	0	-	Average (of DGAC and PCC)	0
9+209	*30225*	*Total*	-		*2015*	-	-	*none*	-	-	*Average (of DGAC and PCC)*	*0*
9+209	30225	Automobiles	-		1176	-		56	none	-	-	Average (of DGAC and PCC)	0
9+209	30225	Medium trucks	-		718	-		56	none	-	-	Average (of DGAC and PCC)	0
9+209	30225	Heavy trucks	-		94	-		56	none	-	-	Average (of DGAC and PCC)	0
9+209	30225	Buses	-		14	-		56	none	-	-	Average (of DGAC and PCC)	0
9+209	30225	Motorcycles	-		13	-		56	none	-	-	Average (of DGAC and PCC)	0
9+209	30225	Auxiliary Vehicle	-	-	-			56	none	-	-	Average (of DGAC and PCC)	0
9+800	*31830*	*Total*	-		*2122*	-	-	*Traffic light*	*0*	-	*Average (of DGAC and PCC)*	*0*
9+800	31830	Automobiles	-		1239	-		56	Traffic light	0	-	Average (of DGAC and PCC)	0
9+800	31830	Medium trucks	-		756	-		56	Traffic light	0	-	Average (of DGAC and PCC)	0
9+800	31830	Heavy trucks	-		99	-		56	Traffic light	0	-	Average (of DGAC and PCC)	0
9+800	31830	Buses	-		14	-		56	Traffic light	0	-	Average (of DGAC and PCC)	0
9+800	31830	Motorcycles	-		14	-		56	Traffic light	0	-	Average (of DGAC and PCC)	0
9+800	31830	Auxiliary Vehicle	-	-	-			56	Traffic light	0	-	Average (of DGAC and PCC)	0
9+998	*31830*	*Total*	-		*2122*	-	-	*none*	-	-	*Average (of DGAC and PCC)*	*0*
9+998	31830	Automobiles	-		1239	-		56	none	-	-	Average (of DGAC and PCC)	0
9+998	31830	Medium trucks	-		756	-		56	none	-	-	Average (of DGAC and PCC)	0
9+998	31830	Heavy trucks	-		99	-		56	none	-	-	Average (of DGAC and PCC)	0
9+998	31830	Buses	-		14	-		56	none	-	-	Average (of DGAC and PCC)	0
9+998	31830	Motorcycles	-		14	-		56	none	-	-	Average (of DGAC and PCC)	0
9+998	31830	Auxiliary Vehicle	-	-	-			56	none	-	-	Average (of DGAC and PCC)	0
10+063	*31830*	*Total*	-		*2122*	-	-	*none*	-	-	*Average (of DGAC and PCC)*	*0*
10+063	31830	Automobiles	-		1239	-		56	none	-	-	Average (of DGAC and PCC)	0
10+063	31830	Medium trucks	-		756	-		56	none	-	-	Average (of DGAC and PCC)	0
10+063	31830	Heavy trucks	-		99	-		56	none	-	-	Average (of DGAC and PCC)	0
10+063	31830	Buses	-		14	-		56	none	-	-	Average (of DGAC and PCC)	0
10+063	31830	Motorcycles	-		14	-		56	none	-	-	Average (of DGAC and PCC)	0
10+063	31830	Auxiliary Vehicle	-	-	-			56	none	-	-	Average (of DGAC and PCC)	0
10+231	*25125*	*Total*	-		*1675*	-	-	*Traffic light*	*0*	-	*Average (of DGAC and PCC)*	*0*
10+231	25125	Automobiles	-		977	-		56	Traffic light	0	-	Average (of DGAC and PCC)	0
10+231	25125	Medium trucks	-		597	-		56	Traffic light	0	-	Average (of DGAC and PCC)	0
10+231	25125	Heavy trucks	-		78	-		56	Traffic light	0	-	Average (of DGAC and PCC)	0

10+231	25125	Buses	-	12	-	56	Traffic light	0	-	Average (of DGAC and PCC)	0
10+231	25125	Motorcycles	-	11	-	56	Traffic light	0	-	Average (of DGAC and PCC)	0
10+231	25125	Auxiliary Vehicle	-	-	-	56	Traffic light	0	-	Average (of DGAC and PCC)	0
10+389	*25125*	*Total*	-	*1675*	-	-	*none*	-	-	*Average (of DGAC and PCC)*	*0*
10+389	25125	Automobiles	-	977	-	56	none	-	-	Average (of DGAC and PCC)	0
10+389	25125	Medium trucks	-	597	-	56	none	-	-	Average (of DGAC and PCC)	0
10+389	25125	Heavy trucks	-	78	-	56	none	-	-	Average (of DGAC and PCC)	0
10+389	25125	Buses	-	12	-	56	none	-	-	Average (of DGAC and PCC)	0
10+389	25125	Motorcycles	-	11	-	56	none	-	-	Average (of DGAC and PCC)	0
10+389	25125	Auxiliary Vehicle	-	-	-	56	none	-	-	Average (of DGAC and PCC)	0
10+931	*36555*	*Total*	-	*2437*	-	-	*Traffic light*	*0*	-	*Average (of DGAC and PCC)*	*0*
10+931	36555	Automobiles	-	1422	-	56	Traffic light	0	-	Average (of DGAC and PCC)	0
10+931	36555	Medium trucks	-	868	-	56	Traffic light	0	-	Average (of DGAC and PCC)	0
10+931	36555	Heavy trucks	-	114	-	56	Traffic light	0	-	Average (of DGAC and PCC)	0
10+931	36555	Buses	-	17	-	56	Traffic light	0	-	Average (of DGAC and PCC)	0
10+931	36555	Motorcycles	-	16	-	56	Traffic light	0	-	Average (of DGAC and PCC)	0
10+931	36555	Auxiliary Vehicle	-	-	-	56	Traffic light	0	-	Average (of DGAC and PCC)	0
12+220	*34485*	*Total*	-	*2299*	-	-	*Traffic light*	*0*	-	*Average (of DGAC and PCC)*	*0*
12+220	34485	Automobiles	-	1341	-	56	Traffic light	0	-	Average (of DGAC and PCC)	0
12+220	34485	Medium trucks	-	819	-	56	Traffic light	0	-	Average (of DGAC and PCC)	0
12+220	34485	Heavy trucks	-	108	-	56	Traffic light	0	-	Average (of DGAC and PCC)	0
12+220	34485	Buses	-	16	-	56	Traffic light	0	-	Average (of DGAC and PCC)	0
12+220	34485	Motorcycles	-	15	-	56	Traffic light	0	-	Average (of DGAC and PCC)	0
12+220	34485	Auxiliary Vehicle	-	-	-	56	Traffic light	0	-	Average (of DGAC and PCC)	0
12+785	-						-	-	-	-	-
0+000	*34485*	*Total*	-	*2299*	-	-	*none*	-	-	*Average (of DGAC and PCC)*	*0*
0+000	34485	Automobiles	-	1341	-	56	none	-	-	Average (of DGAC and PCC)	0
0+000	34485	Medium trucks	-	819	-	56	none	-	-	Average (of DGAC and PCC)	0
0+000	34485	Heavy trucks	-	108	-	56	none	-	-	Average (of DGAC and PCC)	0
0+000	34485	Buses	-	16	-	56	none	-	-	Average (of DGAC and PCC)	0
0+000	34485	Motorcycles	-	15	-	56	none	-	-	Average (of DGAC and PCC)	0
0+000	34485	Auxiliary Vehicle	-	-	-	56	none	-	-	Average (of DGAC and PCC)	0
Valley Mall NB	Traffic direction:	In entry direction									
2+808	*3525*	*Total*	-	*235*	-	-	*none*	-	-	*Average (of DGAC and PCC)*	*0*
2+808	3525	Automobiles	-	136	-	40	none	-	-	Average (of DGAC and PCC)	0
2+808	3525	Medium trucks	-	84	-	40	none	-	-	Average (of DGAC and PCC)	0
2+808	3525	Heavy trucks	-	11	-	40	none	-	-	Average (of DGAC and PCC)	0
2+808	3525	Buses	-	2	-	40	none	-	-	Average (of DGAC and PCC)	0
2+808	3525	Motorcycles	-	2	-	40	none	-	-	Average (of DGAC and PCC)	0
2+808	3525	Auxiliary Vehicle	-	-	-	40	none	-	-	Average (of DGAC and PCC)	0
3+305	*3540*	*Total*	-	*236*	-	-	*none*	-	-	*Average (of DGAC and PCC)*	*0*
3+305	3540	Automobiles	-	137	-	40	none	-	-	Average (of DGAC and PCC)	0
3+305	3540	Medium trucks	-	84	-	40	none	-	-	Average (of DGAC and PCC)	0
3+305	3540	Heavy trucks	-	11	-	40	none	-	-	Average (of DGAC and PCC)	0
3+305	3540	Buses	-	2	-	40	none	-	-	Average (of DGAC and PCC)	0
3+305	3540	Motorcycles	-	2	-	40	none	-	-	Average (of DGAC and PCC)	0
3+305	3540	Auxiliary Vehicle	-	-	-	40	none	-	-	Average (of DGAC and PCC)	0
3+829	*3540*	*Total*	-	*236*	-	-	*none*	-	-	*Average (of DGAC and PCC)*	*0*
3+829	3540	Automobiles	-	137	-	40	none	-	-	Average (of DGAC and PCC)	0
3+829	3540	Medium trucks	-	84	-	40	none	-	-	Average (of DGAC and PCC)	0
3+829	3540	Heavy trucks	-	11	-	40	none	-	-	Average (of DGAC and PCC)	0
3+829	3540	Buses	-	2	-	40	none	-	-	Average (of DGAC and PCC)	0
3+829	3540	Motorcycles	-	2	-	40	none	-	-	Average (of DGAC and PCC)	0
3+829	3540	Auxiliary Vehicle	-	-	-	40	none	-	-	Average (of DGAC and PCC)	0
3+974	-						-	-	-	-	-
I-10 EB Ramp	Traffic direction:	In entry direction									
7+811	*13995*	*Total*	-	*933*	-	-	*On ramp*	*0*	-	*Average (of DGAC and PCC)*	*0*
7+811	13995	Automobiles	-	544	-	64	On ramp	0	-	Average (of DGAC and PCC)	0
7+811	13995	Medium trucks	-	332	-	64	On ramp	0	-	Average (of DGAC and PCC)	0
7+811	13995	Heavy trucks	-	44	-	64	On ramp	0	-	Average (of DGAC and PCC)	0
7+811	13995	Buses	-	7	-	64	On ramp	0	-	Average (of DGAC and PCC)	0

7+811		13995	Motorcycles	-		6	-		64	On ramp	0	-	Average (of DGAC and PCC)	0
7+811		13995	Auxiliary Vehicle	-	-	-			64	On ramp	0	-	Average (of DGAC and PCC)	0
7+858		*13065*	*Total*	-		*871*	-	-		*On ramp*	*0*	-	*Average (of DGAC and PCC)*	*0*
7+858		13065	Automobiles	-		508	-		64	On ramp	0	-	Average (of DGAC and PCC)	0
7+858		13065	Medium trucks	-		310	-		64	On ramp	0	-	Average (of DGAC and PCC)	0
7+858		13065	Heavy trucks	-		41	-		64	On ramp	0	-	Average (of DGAC and PCC)	0
7+858		13065	Buses	-		6	-		64	On ramp	0	-	Average (of DGAC and PCC)	0
7+858		13065	Motorcycles	-		6	-		64	On ramp	0	-	Average (of DGAC and PCC)	0
7+858		13065	Auxiliary Vehicle	-	-	-			64	On ramp	0	-	Average (of DGAC and PCC)	0
7+915		*13065*	*Total*	-		*871*	-	-		*On ramp*	*0*	-	*Average (of DGAC and PCC)*	*0*
7+915		13065	Automobiles	-		508	-		64	On ramp	0	-	Average (of DGAC and PCC)	0
7+915		13065	Medium trucks	-		310	-		64	On ramp	0	-	Average (of DGAC and PCC)	0
7+915		13065	Heavy trucks	-		41	-		64	On ramp	0	-	Average (of DGAC and PCC)	0
7+915		13065	Buses	-		6	-		64	On ramp	0	-	Average (of DGAC and PCC)	0
7+915		13065	Motorcycles	-		6	-		64	On ramp	0	-	Average (of DGAC and PCC)	0
7+915		13065	Auxiliary Vehicle	-	-	-			64	On ramp	0	-	Average (of DGAC and PCC)	0
8+109	-								-		-	-	-	-
I-10 EB Ramp 2	Traffic direction:		In entry direction											
7+811		*21480*	*Total*	-		*1432*	-	-		*On ramp*	*0*	-	*Average (of DGAC and PCC)*	*0*
7+811		21480	Automobiles	-		836	-		64	On ramp	0	-	Average (of DGAC and PCC)	0
7+811		21480	Medium trucks	-		510	-		64	On ramp	0	-	Average (of DGAC and PCC)	0
7+811		21480	Heavy trucks	-		67	-		64	On ramp	0	-	Average (of DGAC and PCC)	0
7+811		21480	Buses	-		10	-		64	On ramp	0	-	Average (of DGAC and PCC)	0
7+811		21480	Motorcycles	-		9	-		64	On ramp	0	-	Average (of DGAC and PCC)	0
7+811		21480	Auxiliary Vehicle	-	-	-			64	On ramp	0	-	Average (of DGAC and PCC)	0
7+936		*19590*	*Total*	-		*1306*	-	-		*On ramp*	*0*	-	*Average (of DGAC and PCC)*	*0*
7+936		19590	Automobiles	-		762	-		64	On ramp	0	-	Average (of DGAC and PCC)	0
7+936		19590	Medium trucks	-		465	-		64	On ramp	0	-	Average (of DGAC and PCC)	0
7+936		19590	Heavy trucks	-		61	-		64	On ramp	0	-	Average (of DGAC and PCC)	0
7+936		19590	Buses	-		9	-		64	On ramp	0	-	Average (of DGAC and PCC)	0
7+936		19590	Motorcycles	-		9	-		64	On ramp	0	-	Average (of DGAC and PCC)	0
7+936		19590	Auxiliary Vehicle	-	-	-			64	On ramp	0	-	Average (of DGAC and PCC)	0
7+991		*20175*	*Total*	-		*1345*	-	-		*On ramp*	*0*	-	*Average (of DGAC and PCC)*	*0*
7+991		20175	Automobiles	-		785	-		64	On ramp	0	-	Average (of DGAC and PCC)	0
7+991		20175	Medium trucks	-		479	-		64	On ramp	0	-	Average (of DGAC and PCC)	0
7+991		20175	Heavy trucks	-		63	-		64	On ramp	0	-	Average (of DGAC and PCC)	0
7+991		20175	Buses	-		9	-		64	On ramp	0	-	Average (of DGAC and PCC)	0
7+991		20175	Motorcycles	-		9	-		64	On ramp	0	-	Average (of DGAC and PCC)	0
7+991		20175	Auxiliary Vehicle	-	-	-			64	On ramp	0	-	Average (of DGAC and PCC)	0
8+134	-								-		-	-	-	-
Olney St WB	Traffic direction:		In entry direction											
7+811		*1560*	*Total*	-		*104*	-	-		*none*	-	-	*Average (of DGAC and PCC)*	*0*
7+811		1560	Automobiles	-		60	-		40	none	-	-	Average (of DGAC and PCC)	0
7+811		1560	Medium trucks	-		37	-		40	none	-	-	Average (of DGAC and PCC)	0
7+811		1560	Heavy trucks	-		5	-		40	none	-	-	Average (of DGAC and PCC)	0
7+811		1560	Buses	-		1	-		40	none	-	-	Average (of DGAC and PCC)	0
7+811		1560	Motorcycles	-		1	-		40	none	-	-	Average (of DGAC and PCC)	0
7+811		1560	Auxiliary Vehicle	-	-	-			40	none	-	-	Average (of DGAC and PCC)	0
7+923	-								-		-	-	-	-
I-10 WB Ramp	Traffic direction:		In entry direction											
7+811		*480*	*Total*	-		*32*	-	-		*On ramp*	*0*	*100*	*Average (of DGAC and PCC)*	*0*
7+811		480	Automobiles	-		17	-		56	On ramp	0	100	Average (of DGAC and PCC)	0
7+811		480	Medium trucks	-		11	-		56	On ramp	0	100	Average (of DGAC and PCC)	0
7+811		480	Heavy trucks	-		2	-		56	On ramp	0	100	Average (of DGAC and PCC)	0
7+811		480	Buses	-		1	-		56	On ramp	0	100	Average (of DGAC and PCC)	0
7+811		480	Motorcycles	-		1	-		56	On ramp	0	100	Average (of DGAC and PCC)	0
7+811		480	Auxiliary Vehicle	-	-	-			56	On ramp	0	100	Average (of DGAC and PCC)	0
7+903	-								-		-	-	-	-

05360 Flair Spectrum Specific Plan
Year 2019 Plus Project Buildout
Receiver Spectra

No.	Name	Floor	Time slice	50 Hz	63 Hz	80 Hz	100 Hz	125 Hz	160 Hz	200 Hz	250 Hz	315 Hz	400 Hz	500 Hz	630 Hz	800 Hz	1 kHz	1 kHz	2 kHz	2 kHz	2 kHz	3 kHz	4 kHz	5 kHz	6 kHz	8 kHz	10 kHz
1	SE of Rosemead Boulevard at I-10	GF	Day	40.7	47.8	52.3	54.8	56.6	58	58.5	54.8	51.9	50.4	52.9	55.1	54.9	56.4	56.4	57.1	57	57.5	57.7	55.2	52.8	50.2	46.9	42.2
1	SE of Rosemead Boulevard at I-10	GF	Night	0	0	0	0	0	0	0	0	0	0	0	0	0	0	0	0	0	0	0	0	0	0	0	0
2	NE corner of Aerojet and Telstar	GF	Day	42.4	48.3	52.2	54.6	56.1	57.3	57.8	55.2	53.6	52.2	52.5	54	54	55.2	54	55	54.2	54.3	55.1	54	52.6	49.5	46.4	41.9
2	NE corner of Aerojet and Telstar	GF	Night	0	0	0	0	0	0	0	0	0	0	0	0	0	0	0	0	0	0	0	0	0	0	0	0
3	NE corner of Peck and Garvey	GF	Day	42.2	47.8	51.4	53.5	55	56.2	56.8	54.8	53.2	51.3	51.5	53.2	53.1	54.6	53.9	54.4	53.3	53.5	53.7	51.6	50.2	46.4	43.4	39.3
3	NE corner of Peck and Garvey	GF	Night	0	0	0	0	0	0	0	0	0	0	0	0	0	0	0	0	0	0	0	0	0	0	0	0
4	NE corner of Roseglen and Lower Azusa	GF	Day	37.4	42.7	46.1	48.1	49.5	50.6	51	49.3	46.8	43.3	42.9	45.3	46	47.9	48	49.1	48.4	48	48	47.2	44.7	41.5	38.6	34.7
4	NE corner of Roseglen and Lower Azusa	GF	Night	0	0	0	0	0	0	0	0	0	0	0	0	0	0	0	0	0	0	0	0	0	0	0	0
5	NE corner of Peck and Ramona	GF	Day	41.5	46.9	50.5	52.6	54	55.2	55.6	53.6	51.6	49.1	49.3	51.2	51.3	52.9	52.6	53.4	52.4	52.1	52.9	50.9	48.9	45.4	42.4	38.5
5	NE corner of Peck and Ramona	GF	Night	0	0	0	0	0	0	0	0	0	0	0	0	0	0	0	0	0	0	0	0	0	0	0	0
6	NE corner of Rosemead and Lower Azusa	GF	Day	41.3	47.1	50.8	52.9	54.4	55.7	56.3	55.1	53.5	51.3	51	53	53.4	55.1	54.4	55.1	53.9	53.7	53.3	51.4	49.6	45.9	42.9	38.9
6	NE corner of Rosemead and Lower Azusa	GF	Night	0	0	0	0	0	0	0	0	0	0	0	0	0	0	0	0	0	0	0	0	0	0	0	0
7	NE corner of Rosemead and Rush	GF	Day	40.1	45.9	49.6	51.8	53.2	54.4	55	53.2	51	47.9	47.7	50	50.6	52.6	52.4	53.4	52.7	52.3	52.4	50.6	48.9	45.4	42.4	38.3
7	NE corner of Rosemead and Rush	GF	Night	0	0	0	0	0	0	0	0	0	0	0	0	0	0	0	0	0	0	0	0	0	0	0	0
8	NE corner of Santa Anita and Valley	GF	Day	42.3	48.1	51.9	54.1	55.6	56.8	57.3	55.7	54	52	52.1	53.7	53.8	55.3	54.7	55.3	54.4	54.6	54.5	52.1	50.8	47.2	44.1	40
8	NE corner of Santa Anita and Valley	GF	Night	0	0	0	0	0	0	0	0	0	0	0	0	0	0	0	0	0	0	0	0	0	0	0	0
9	NE corner of Tyler and Valley	GF	Day	41.1	46.5	50.2	52.4	53.9	55.1	55.5	52.6	50.3	47.7	48.1	49.9	49.9	51.5	51.4	52.3	51.8	51.7	52.5	51.5	49	45.8	42.8	38.6
9	NE corner of Tyler and Valley	GF	Night	0	0	0	0	0	0	0	0	0	0	0	0	0	0	0	0	0	0	0	0	0	0	0	0
10	NE corner of Walnut Grove and Valley	GF	Day	40.4	46.1	49.7	51.9	53.3	54.5	54.9	52.4	50.1	47.1	47.2	49.3	49.7	51.6	51.5	52.4	51.7	51.4	51.8	50.4	48.4	45.2	42.2	38.1
10	NE corner of Walnut Grove and Valley	GF	Night	0	0	0	0	0	0	0	0	0	0	0	0	0	0	0	0	0	0	0	0	0	0	0	0
11	NE corner of Walnut Grove and Garvey	GF	Day	40.1	45.9	49.6	51.7	53.1	54.2	54.6	51.9	49.4	46.1	46.3	48.5	49	50.9	50.9	52	51.5	51.3	51.3	50.2	48.3	45.2	42.2	38.1
11	NE corner of Walnut Grove and Garvey	GF	Night	0	0	0	0	0	0	0	0	0	0	0	0	0	0	0	0	0	0	0	0	0	0	0	0
12	NW corner of Baldwin and Olive	GF	Day	37.2	42.4	45.7	47.7	49.1	50.2	50.5	47.9	45.1	41.6	41.6	43.9	44.4	46.3	46.4	47.6	47.3	47.2	47.1	46.4	44.3	41.2	38.3	34.4
12	NW corner of Baldwin and Olive	GF	Night	0	0	0	0	0	0	0	0	0	0	0	0	0	0	0	0	0	0	0	0	0	0	0	0
13	NE of San Gabriel at I-10	GF	Day	40.5	47.1	51.3	53.8	55.5	57.1	57.8	55.7	53.6	51.8	53.6	55.8	55.9	57.5	57.3	57.9	57.1	56.8	56.1	53.9	52.2	48.6	45.3	40.7
13	NE of San Gabriel at I-10	GF	Night	0	0	0	0	0	0	0	0	0	0	0	0	0	0	0	0	0	0	0	0	0	0	0	0
14	NW Corner of Aerojet and Telstar	GF	Day	43.7	49.7	53.7	56.1	57.7	58.9	59.4	57.7	56.4	55.3	55.9	57.3	56.9	57.9	56.6	57.3	56.2	56.2	56.8	55.4	53.9	50.9	47.8	43.6
14	NW Corner of Aerojet and Telstar	GF	Night	0	0	0	0	0	0	0	0	0	0	0	0	0	0	0	0	0	0	0	0	0	0	0	0
15	NW corner of Peck and Lower Azusa	GF	Day	39.9	45.2	48.7	50.7	52.1	53.1	53.5	51.5	48.8	45.6	45.9	48.1	48.4	50.2	50.3	51.3	51	50.7	50.5	50	47.8	44.6	41.7	37.7
15	NW corner of Peck and Lower Azusa	GF	Night	0	0	0	0	0	0	0	0	0	0	0	0	0	0	0	0	0	0	0	0	0	0	0	0
16	NW corner of Merced and Garvey	GF	Day	39	44.6	48.3	50.5	51.9	53.1	53.4	49.1	46.4	43	43.3	45.6	46	47.8	47.9	49.2	49	49.3	49.3	47.9	47	43.5	40.5	36.4
16	NW corner of Merced and Garvey	GF	Night	0	0	0	0	0	0	0	0	0	0	0	0	0	0	0	0	0	0	0	0	0	0	0	0
17	NW corner of Glendon and Rosemead	GF	Day	43.5	49.6	53.5	55.8	57.4	58.7	59.4	57.8	56.6	55.3	55.8	57.5	57.4	58.7	57.6	58	57.1	56.6	56.5	55	53.3	49.9	46.8	42.4
17	NW corner of Glendon and Rosemead	GF	Night	0	0	0	0	0	0	0	0	0	0	0	0	0	0	0	0	0	0	0	0	0	0	0	0
18	NW corner of San Gabriel and Valley	GF	Day	42	47.4	50.9	53	54.4	55.6	56.2	55	53.3	51.1	50.9	52.7	53	54.6	53.8	54.5	53.7	53.3	53	51.2	50	46	43.1	39.2
18	NW corner of San Gabriel and Valley	GF	Night	0	0	0	0	0	0	0	0	0	0	0	0	0	0	0	0	0	0	0	0	0	0	0	0
19	NW corner of Tyler and Garvey	GF	Day	42.3	47.4	50.8	52.9	54.3	55.5	55.9	53.1	51.1	48.8	48.9	50.6	50.7	52.2	51.7	52.3	51.7	51.9	52.3	51	49.5	45.9	42.9	38.9
19	NW corner of Tyler and Garvey	GF	Night	0	0	0	0	0	0	0	0	0	0	0	0	0	0	0	0	0	0	0	0	0	0	0	0
20	NW corner of Rio Hondo and Telstar	GF	Day	43	48.4	52	54.1	55.6	56.9	57.5	55.7	55	54.2	54.7	56	55.5	56.4	54.8	55.1	53.2	53.1	53.6	52.6	51.7	48.6	45.7	41.8
20	NW corner of Rio Hondo and Telstar	GF	Night	0	0	0	0	0	0	0	0	0	0	0	0	0	0	0	0	0	0	0	0	0	0	0	0
21	NW corner of Valley and Garvey	GF	Day	41.1	46.8	50.4	52.6	54.1	55.4	55.9	53.3	51.5	49.3	49.4	51.2	51.4	53	52.4	53.1	52.5	52.6	52.4	51	50.1	46.4	43.3	39.1
21	NW corner of Valley and Garvey	GF	Night	0	0	0	0	0	0	0	0	0	0	0	0	0	0	0	0	0	0	0	0	0	0	0	0
22	NW corner of Tyler and Ramona	GF	Day	40.9	46.3	49.9	52.1	53.6	54.7	55	50.6	48.7	47.2	48.2	49.7	49	50.1	49.5	50.1	49.6	50.4	51.6	50.2	49.2	45.8	42.7	38.3
22	NW corner of Tyler and Ramona	GF	Night	0	0	0	0	0	0	0	0	0	0	0	0	0	0	0	0	0	0	0	0	0	0	0	0
23	NW of Santa Anita at I-10	GF	Day	42.4	49	53.3	55.8	57.6	59.2	60	58.4	56.9	55.6	57.4	59.5	59.3	60.8	60.4	60.8	59.7	59	57.9	55.9	54.3	50.6	47.3	42.7
23	NW of Santa Anita at I-10	GF	Night	0	0	0	0	0	0	0	0	0	0	0	0	0	0	0	0	0	0	0	0	0	0	0	0
24	SE corner of Baldwin and Valley	GF	Day	41	47	51.1	53.4	55	56.1	56.5	53.8	51.5	48.5	48.5	50.6	51.1	52.8	52.8	53.8	53.4	53.4	53.8	52	50.5	46.9	43.8	39.5
24	SE corner of Baldwin and Valley	GF	Night	0	0	0	0	0	0	0	0	0	0	0	0	0	0	0	0	0	0	0	0	0	0	0	0
25	SE corner of Aerojet and Flair	GF	Day	42	48.5	52.8	55.3	57.1	58.7	59.4	57.5	56.1	55.4	57.5	59.5	58.9	60.1	59.6	59.8	58.8	58.1	57.2	55.4	53.9	50.4	47.1	42.5
25	SE corner of Aerojet and Flair	GF	Night	0	0	0	0	0	0	0	0	0	0	0	0	0	0	0	0	0	0	0	0	0	0	0	0
26	SE corner of Rosemead and Garvey	GF	Day	41.9	47.7	51.4	53.6	55.1	56.3	56.8	54.7	52.6	50.3	50.5	52.4	52.6	54.2	53.8	54.6	54	54.3	53.9	52.1	50.9	47.3	44.3	40.2
26	SE corner of Rosemead and Garvey	GF	Night	0	0	0	0	0	0	0	0	0	0	0	0	0	0	0	0	0	0	0	0	0	0	0	0
27	SE corner of Temple City at Loftus	GF	Day	42.8	48.4	52.2	54.5	56.1	57.5	58	55.4	53.7	52.7	54	55.8	55.2	56.3	55.5	55.9	55.3	55.6	55.9	53.9	52.3	48.8	45.6	41.1

27	SE corner of Temple City at Loftus	GF	Night	0	0	0	0	0	0	0	0	0	0	0	0	0	0	0	0	0	0	0	0	0	0	0
28	SE corner of Chico and Garvey	GF	Day	40.3	45.8	49.4	51.5	52.9	54.1	54.5	52.2	50.4	47.9	47.8	49.6	49.9	51.6	51.1	51.7	50.7	50.8	51.2	49.1	47.6	44.1	41.1	37.1
28	SE corner of Chico and Garvey	GF	Night	0	0	0	0	0	0	0	0	0	0	0	0	0	0	0	0	0	0	0	0	0	0	0	0
29	SE corner of Temple City at Valley	GF	Day	40.8	46.6	50.5	52.8	54.2	55.4	55.7	53.1	50.8	47.9	48	50.1	50.4	52.1	52.1	53.1	52.7	52.5	52.8	51.6	49.7	46.4	43.3	39.1
29	SE corner of Temple City at Valley	GF	Night	0	0	0	0	0	0	0	0	0	0	0	0	0	0	0	0	0	0	0	0	0	0	0	0
30	South of Santa Anita at Tyler	GF	Day	42.3	47.1	50.3	52.3	53.6	54.7	55.1	53.3	51.1	48.3	48.1	50	50.3	52.1	51.8	52.6	51.8	51.7	52.3	50.6	48.3	45	42.2	38.5
30	South of Santa Anita at Tyler	GF	Night	0	0	0	0	0	0	0	0	0	0	0	0	0	0	0	0	0	0	0	0	0	0	0	0
31	SW corner of Baldwin and Lower Azusa	GF	Day	41.1	46.6	50.1	52.2	53.6	54.8	55.3	53.6	51.7	49	48.7	50.7	51.3	53.1	52.7	53.4	52.3	52.2	52.7	50.6	48.7	45.1	42.2	38.2
31	SW corner of Baldwin and Lower Azusa	GF	Night	0	0	0	0	0	0	0	0	0	0	0	0	0	0	0	0	0	0	0	0	0	0	0	0
32	SW corner of Gilman and Ramona	GF	Day	39.3	44.5	47.9	49.9	51.3	52.5	53.1	52	50.3	47.8	47.3	49.2	49.7	51.4	50.7	51.4	50.3	50.4	50.2	48.1	46.5	42.5	39.6	35.9
32	SW corner of Gilman and Ramona	GF	Night	0	0	0	0	0	0	0	0	0	0	0	0	0	0	0	0	0	0	0	0	0	0	0	0
33	SW corner of Durfee and Ramona	GF	Day	38.7	44	47.5	49.5	51	52.1	52.6	50.9	49	46.3	45.8	47.8	48.4	50.2	49.7	50.5	49.5	49.5	49.7	47.5	45.9	42.3	39.4	35.6
33	SW corner of Durfee and Ramona	GF	Night	0	0	0	0	0	0	0	0	0	0	0	0	0	0	0	0	0	0	0	0	0	0	0	0
34	SW corner of Fletcher and Flair	GF	Day	43.4	49.6	53.8	56.3	58.1	59.8	60.8	60.1	59.6	59.4	61.2	63	62.2	63.2	62.4	62.2	60.8	59.4	58.4	56.4	54	51	47.8	43.5
34	SW corner of Fletcher and Flair	GF	Night	0	0	0	0	0	0	0	0	0	0	0	0	0	0	0	0	0	0	0	0	0	0	0	0
35	SW corner of Peck and Garvey	GF	Day	42.1	47.5	51.1	53.2	54.7	55.9	56.5	54.7	53.2	51.5	51.7	53.3	53.2	54.6	53.8	54.2	53.3	53.2	53.1	51.3	49.8	46.1	43.2	39.2
35	SW corner of Peck and Garvey	GF	Night	0	0	0	0	0	0	0	0	0	0	0	0	0	0	0	0	0	0	0	0	0	0	0	0
36	SW corner of Merced and Garvey	GF	Day	38.9	44.5	48.1	50.2	51.7	52.8	53.1	49.3	46.6	43.4	43.8	45.9	46.2	48	48.1	49.2	49	49.2	49.2	47.7	46.8	43.3	40.3	36.2
36	SW corner of Merced and Garvey	GF	Night	0	0	0	0	0	0	0	0	0	0	0	0	0	0	0	0	0	0	0	0	0	0	0	0
37	SW corner of Rio Hondo and Flair	GF	Day	42.8	48.9	53	55.5	57.2	58.7	59.4	57.2	55.7	54.9	57.1	59	58.4	59.6	59.1	59.3	58.4	57.9	56.9	55	53.8	50.2	46.8	42.3
37	SW corner of Rio Hondo and Flair	GF	Night	0	0	0	0	0	0	0	0	0	0	0	0	0	0	0	0	0	0	0	0	0	0	0	0
38	SW corner of Rosemead and Las Tunas Dr	GF	Day	40.7	46.1	49.6	51.6	53	54.2	54.7	53	50.6	47.6	47.7	49.9	50.3	52.1	52.1	53	52.4	52	52.1	51.1	48.7	45.6	42.6	38.6
38	SW corner of Rosemead and Las Tunas Dr	GF	Night	0	0	0	0	0	0	0	0	0	0	0	0	0	0	0	0	0	0	0	0	0	0	0	0
39	SW corner of Santa Anita and Lower Azusa	GF	Day	41.9	46.7	49.9	51.9	53.2	54.3	54.8	53.2	51.1	48.4	48.1	50	50.5	52.2	51.7	52.5	51.7	51.9	51.9	50.4	48.4	44.8	42	38.3
39	SW corner of Santa Anita and Lower Azusa	GF	Night	0	0	0	0	0	0	0	0	0	0	0	0	0	0	0	0	0	0	0	0	0	0	0	0
40	SW corner of Rosemead and Valley	GF	Day	43.2	49	52.7	54.9	56.4	57.6	58.3	57.3	56.1	54.3	54.3	56	56.2	57.7	56.6	57.1	56	55.6	55	53	51.5	47.9	45	41
40	SW corner of Rosemead and Valley	GF	Night	0	0	0	0	0	0	0	0	0	0	0	0	0	0	0	0	0	0	0	0	0	0	0	0
41	SW corner of Santa Anita and Garvey	GF	Day	41.4	46.8	50.4	52.5	54	55.2	55.6	53.3	51.2	48.7	48.9	50.8	50.9	52.5	52.3	53.1	52.2	52	52.5	50.9	48.8	45.4	42.4	38.4
41	SW corner of Santa Anita and Garvey	GF	Night	0	0	0	0	0	0	0	0	0	0	0	0	0	0	0	0	0	0	0	0	0	0	0	0
42	SW corner of Temple City and Lower Azusa	GF	Day	39.2	45.1	49	51.3	52.8	54	54.3	51.5	48.8	45.4	45.6	47.9	48.4	50.3	50.5	51.7	51.5	51.6	51.6	50.3	48.9	45.5	42.4	38.1
42	SW corner of Temple City and Lower Azusa	GF	Night	0	0	0	0	0	0	0	0	0	0	0	0	0	0	0	0	0	0	0	0	0	0	0	0
43	SW of Peck at I-10	GF	Day	41.6	48.3	52.6	55.1	56.9	58.5	59.3	57.3	55.7	54.3	56.1	58.3	58.2	59.7	59.4	59.9	59	58.2	57.2	55.6	53.7	50.4	47	42.4
43	SW of Peck at I-10	GF	Night	0	0	0	0	0	0	0	0	0	0	0	0	0	0	0	0	0	0	0	0	0	0	0	0
44	SW corner of Telstar and Flair	GF	Day	43.8	49.9	54	56.5	58.3	59.9	60.9	60	59.4	59.1	60.8	62.6	61.8	62.9	62.1	62	60.6	59.3	58.4	56.5	54.2	51.1	47.9	43.6
44	SW corner of Telstar and Flair	GF	Night	0	0	0	0	0	0	0	0	0	0	0	0	0	0	0	0	0	0	0	0	0	0	0	0
45	SW of Santa Anita at I-10	GF	Day	41.2	47.8	52	54.5	56.3	57.8	58.5	55.9	53.8	52.6	54.8	56.9	56.6	58	57.7	58.2	57.6	57.3	56.7	54.4	52.7	49.3	46	41.4
45	SW of Santa Anita at I-10	GF	Night	0	0	0	0	0	0	0	0	0	0	0	0	0	0	0	0	0	0	0	0	0	0	0	0

05360 Flair Spectrum Specific Plan
Year 2019 Plus Project Buildout
Receivers

No.	Receiver name	Floor	Level Day dB(A)
1	SE of Rosemead Boulevard at I-10	GF	68.7
2	NE corner of Aerojet and Telstar	GF	67.7
3	NE corner of Peck and Garvey	GF	66.7
4	NE corner of Peck and Ramona	GF	65.4
5	NE corner of Roseglen and Lower Azusa	GF	60.8
6	NE corner of Rosemead and Lower Azusa	GF	66.6
7	NE corner of Rosemead and Rush	GF	64.9
8	NE corner of Santa Anita and Valley	GF	67.4
9	NE corner of Tyler and Valley	GF	64.9
10	NE corner of Walnut Grove and Garvey	GF	64.1
11	NE corner of Walnut Grove and Valley	GF	64.5
12	NE of San Gabriel at I-10	GF	68.6
13	NW Corner of Aerojet and Telstar	GF	69.8
14	NW corner of Baldwin and Olive	GF	59.9
15	NW corner of Glendon and Rosemead	GF	69.9
16	NW corner of Merced and Garvey	GF	62.1
17	NW corner of Peck and Lower Azusa	GF	63.4
18	NW corner of Rio Hondo and Telstar	GF	67.8
19	NW corner of San Gabriel and Valley	GF	66.4
20	NW corner of Tyler and Garvey	GF	65.3
21	NW corner of Tyler and Ramona	GF	64
22	NW corner of Valley and Garvey	GF	65.5
23	NW of Santa Anita at I-10	GF	71.4
24	SE corner of Aerojet and Flair	GF	70.8
24	SE corner of Baldwin and Valley	GF	66
25	SE corner of Chico and Garvey	GF	64.1
27	SE corner of Rosemead and Garvey	GF	66.7
28	SE corner of Temple City at Loftus	GF	68.2
29	SE corner of Temple City at Valley	GF	65.3
30	South of Santa Anita at Tyler	GF	64.9
31	SW corner of Baldwin and Lower Azusa	GF	65.3
32	SW corner of Durfee and Ramona	GF	62.5
33	SW corner of Fletcher and Flair	GF	73.1
34	SW corner of Gilman and Ramona	GF	63.3
35	SW corner of Merced and Garvey	GF	62.1
36	SW corner of Peck and Garvey	GF	66.5

37	SW corner of Rio Hondo and Flair	GF	70.5
38	SW corner of Rosemead and Las Tunas Dr	GF	64.7
39	SW corner of Rosemead and Valley	GF	68.8
40	SW corner of Santa Anita and Garvey	GF	65.2
41	SW corner of Santa Anita and Lower Azusa	GF	64.7
42	SW corner of Telstar and Flair	GF	72.9
43	SW corner of Temple City and Lower Azusa	GF	63.9
44	SW of Peck at I-10	GF	70.4
45	SW of Santa Anita at I-10	GF	69.2

05360 Flair Spectrum Specific Plan
Year 2035 No Project Buildout
Contributions

Source name			Level Day dB(A)
SE of Rosemead Boulevard at I-10	GF	68.9	
Aerojet Ave NB			43.1
Aerojet Ave SB			43.1
Baldwin Ave NB			36
Baldwin Ave SB			34.7
Chico Ave SB			24.3
Durfee Ave NB			0
Durfee Ave NB (South)			0
Durfee Ave SB (South)			0
Flair Dr EB			40.6
Flair Dr WB			39.6
Fletcher Ave NB			20.2
Fletcher Ave SB			19.7
Garvey Ave EB			42.5
Garvey Ave WB			42.2
Gilman Rd NB			0
Gilman Rd SB			0
Glendon Way EB			40.9
Glendon Way WB			39.8
I-10 EB			64.8
I-10 EB Ramp			44.7
I-10 EB Ramp 2			54.2
I-10 WB			63.1
I-10 WB Ramp			19
Las Tunas Dr EB			26.7
Las Tunas Dr WB			26.5
Loftus Dr EB			26.2
Loftus Dr WB			29.1
Lower Azusa Rd EB			33.7
Lower Azusa Rd WB			33.5
Merced Ave NB			12.5
Merced Ave NB			24.7
Merced Ave SB			26
Olive St EB			15.9
Olive St WB			15.5
Olney St WB			13.4

Peck Rd NB			25.2
Peck Rd SB			26
Ramona Blvd EB			23.7
Ramona Blvd WB			24.3
Rio Hondo Ave NB			27.1
Rio Hondo Ave SB			26.9
Roseglen St NB			0
Roseglen St NB1			0
Roseglen St SB			0
Rosemead Blvd NB			60.4
Rosemead Blvd SB			59.7
Rush St EB			29
Rush St WB			24
San Gabriel Blvd NB			34.7
San Gabriel Blvd SB			35.3
Santa Anita Ave NB			32.8
Santa Anita Ave SB			33.2
Telstar Ave EB			51.8
Telstar Ave WB			44
Temple City Blvd NB			37.3
Temple City Blvd SB			36.8
Tyler Ave NB			27.9
Tyler Ave SB			28.6
Valley Blvd EB			41
Valley Blvd WB			41.5
Valley Mall NB			16.2
Valley Mall SB			13.8
Walnut Grove NB			40.9
Walnut Grove SB			40.4
Whitmore St			40.1
NE corner of Aerojet and Telstar	GF	66.6	
Aerojet Ave NB			54.6
Aerojet Ave SB			53.4
Baldwin Ave NB			36.6
Baldwin Ave SB			35.4
Chico Ave SB			26.7
Durfee Ave NB			0
Durfee Ave NB (South)			0
Durfee Ave SB (South)			0
Flair Dr EB			41.9
Flair Dr WB			40.9
Fletcher Ave NB			23
Fletcher Ave SB			22.6

Garvey Ave EB	44.3
Garvey Ave WB	44
Gilman Rd NB	0
Gilman Rd SB	0
Glendon Way EB	34.7
Glendon Way WB	33.7
I-10 EB	57.6
I-10 EB Ramp	34.4
I-10 EB Ramp 2	38.8
I-10 WB	56.4
I-10 WB Ramp	20.5
Las Tunas Dr EB	23.2
Las Tunas Dr WB	20
Loftus Dr EB	27.4
Loftus Dr WB	30.2
Lower Azusa Rd EB	33.3
Lower Azusa Rd WB	33.1
Merced Ave NB	15
Merced Ave NB	26.4
Merced Ave SB	27.8
Olive St EB	15.7
Olive St WB	15.3
Olney St WB	14.9
Peck Rd NB	27.4
Peck Rd SB	28
Ramona Blvd EB	25.5
Ramona Blvd WB	26.1
Rio Hondo Ave NB	32.7
Rio Hondo Ave SB	32.6
Roseglen St NB	0
Roseglen St NB1	0
Roseglen St SB	0
Rosemead Blvd NB	57
Rosemead Blvd SB	56.7
Rush St EB	30.3
Rush St WB	25.4
San Gabriel Blvd NB	33.2
San Gabriel Blvd SB	33.8
Santa Anita Ave NB	33.7
Santa Anita Ave SB	34.1
Telstar Ave EB	60.2
Telstar Ave WB	58.9
Temple City Blvd NB	37.7

Temple City Blvd SB			37.3
Tyler Ave NB			28.8
Tyler Ave SB			29.6
Valley Blvd EB			40.1
Valley Blvd WB			40.5
Valley Mall NB			16.9
Valley Mall SB			14.6
Walnut Grove NB			38.9
Walnut Grove SB			38.4
Whitmore St			46.7
NE corner of Peck and Garvey	GF	66.9	
Aerojet Ave NB			14.9
Aerojet Ave SB			14.6
Baldwin Ave NB			32.6
Baldwin Ave SB			31.1
Chico Ave SB			18
Durfee Ave NB			15.5
Durfee Ave NB (South)			0
Durfee Ave SB (South)			19.6
Flair Dr EB			23
Flair Dr WB			23.2
Fletcher Ave NB			9.7
Fletcher Ave SB			9.1
Garvey Ave EB			58.8
Garvey Ave WB			60.5
Gilman Rd NB			14.5
Gilman Rd SB			19.2
Glendon Way EB			0
Glendon Way WB			0
I-10 EB			54.8
I-10 EB Ramp			0
I-10 EB Ramp 2			14.6
I-10 WB			54.4
I-10 WB Ramp			9.1
Las Tunas Dr EB			0
Las Tunas Dr WB			0
Loftus Dr EB			20.2
Loftus Dr WB			23.2
Lower Azusa Rd EB			33.2
Lower Azusa Rd WB			32.9
Merced Ave NB			6.3
Merced Ave NB			25
Merced Ave SB			26.2

Olive St EB			0
Olive St WB			0
Olney St WB			3.4
Peck Rd NB			60.4
Peck Rd SB			60.9
Ramona Blvd EB			38.4
Ramona Blvd WB			38.7
Rio Hondo Ave NB			10.4
Rio Hondo Ave SB			10.1
Roseglen St NB			14.2
Roseglen St NB1			10.9
Roseglen St SB			9.7
Rosemead Blvd NB			33.4
Rosemead Blvd SB			33.4
Rush St EB			25.2
Rush St WB			20.2
San Gabriel Blvd NB			0
San Gabriel Blvd SB			0
Santa Anita Ave NB			39.7
Santa Anita Ave SB			40
Telstar Ave EB			26.1
Telstar Ave WB			22.2
Temple City Blvd NB			30.2
Temple City Blvd SB			29.2
Tyler Ave NB			43.1
Tyler Ave SB			41.9
Valley Blvd EB			45.5
Valley Blvd WB			44.5
Valley Mall NB			24.7
Valley Mall SB			22.5
Walnut Grove NB			0
Walnut Grove SB			0
Whitmore St			22.9
NE corner of Peck and Ramona	GF	65.7	
Aerojet Ave NB			0
Aerojet Ave SB			0
Baldwin Ave NB			32.9
Baldwin Ave SB			31.3
Chico Ave SB			14.5
Durfee Ave NB			20.7
Durfee Ave NB (South)			0
Durfee Ave SB (South)			25.1
Flair Dr EB			20

Flair Dr WB	20.3
Fletcher Ave NB	7.4
Fletcher Ave SB	6.8
Garvey Ave EB	37.8
Garvey Ave WB	38.2
Gilman Rd NB	19
Gilman Rd SB	23.7
Glendon Way EB	0
Glendon Way WB	0
I-10 EB	50.8
I-10 EB Ramp	0
I-10 EB Ramp 2	0
I-10 WB	50.5
I-10 WB Ramp	7.2
Las Tunas Dr EB	0
Las Tunas Dr WB	0
Loftus Dr EB	19.1
Loftus Dr WB	21.7
Lower Azusa Rd EB	37.6
Lower Azusa Rd WB	37.3
Merced Ave NB	2.8
Merced Ave NB	20.6
Merced Ave SB	21.8
Olive St EB	15.5
Olive St WB	15.1
Olney St WB	1.5
Peck Rd NB	60.9
Peck Rd SB	59.4
Ramona Blvd EB	57.7
Ramona Blvd WB	58.4
Rio Hondo Ave NB	8.2
Rio Hondo Ave SB	7.9
Roseglen St NB	19.3
Roseglen St NB1	16.1
Roseglen St SB	14.7
Rosemead Blvd NB	0
Rosemead Blvd SB	0
Rush St EB	0
Rush St WB	0
San Gabriel Blvd NB	0
San Gabriel Blvd SB	0
Santa Anita Ave NB	38
Santa Anita Ave SB	38.4

Telstar Ave EB			18
Telstar Ave WB			17.6
Temple City Blvd NB			30.4
Temple City Blvd SB			29
Tyler Ave NB			38
Tyler Ave SB			40
Valley Blvd EB			42.8
Valley Blvd WB			42
Valley Mall NB			24.5
Valley Mall SB			22.2
Walnut Grove NB			0
Walnut Grove SB			0
Whitmore St			0
NE corner of Roseglen and Lower Azusa	GF	61.2	
Aerojet Ave NB			0
Aerojet Ave SB			0
Baldwin Ave NB			0
Baldwin Ave SB			0
Chico Ave SB			0
Durfee Ave NB			40.8
Durfee Ave NB (South)			0
Durfee Ave SB (South)			23
Flair Dr EB			0
Flair Dr WB			0
Fletcher Ave NB			0
Fletcher Ave SB			0
Garvey Ave EB			26.1
Garvey Ave WB			26.6
Gilman Rd NB			19.9
Gilman Rd SB			24.6
Glendon Way EB			0
Glendon Way WB			0
I-10 EB			37.6
I-10 EB Ramp			0
I-10 EB Ramp 2			0
I-10 WB			38.3
I-10 WB Ramp			0
Las Tunas Dr EB			0
Las Tunas Dr WB			0
Loftus Dr EB			0
Loftus Dr WB			0
Lower Azusa Rd EB			57.2
Lower Azusa Rd WB			58

Merced Ave NB			0
Merced Ave NB			0
Merced Ave SB			0
Olive St EB			0
Olive St WB			0
Olney St WB			0
Peck Rd NB			38.8
Peck Rd SB			38.2
Ramona Blvd EB			36.4
Ramona Blvd WB			36.5
Rio Hondo Ave NB			0
Rio Hondo Ave SB			0
Roseglen St NB			49.1
Roseglen St NB1			36.1
Roseglen St SB			43.4
Rosemead Blvd NB			0
Rosemead Blvd SB			0
Rush St EB			0
Rush St WB			0
San Gabriel Blvd NB			0
San Gabriel Blvd SB			0
Santa Anita Ave NB			28.7
Santa Anita Ave SB			29.2
Telstar Ave EB			0
Telstar Ave WB			0
Temple City Blvd NB			0
Temple City Blvd SB			0
Tyler Ave NB			30.4
Tyler Ave SB			32.7
Valley Blvd EB			31.2
Valley Blvd WB			30.1
Valley Mall NB			14.6
Valley Mall SB			12.2
Walnut Grove NB			0
Walnut Grove SB			0
Whitmore St			0
NE corner of Rosemead and Lower Azusa	GF	66.8	
Aerojet Ave NB			21.3
Aerojet Ave SB			21.1
Baldwin Ave NB			36.3
Baldwin Ave SB			34.9
Chico Ave SB			16.6
Durfee Ave NB			0

Durfee Ave NB (South)	0
Durfee Ave SB (South)	0
Flair Dr EB	26.8
Flair Dr WB	26.6
Fletcher Ave NB	12.4
Fletcher Ave SB	11.9
Garvey Ave EB	33.5
Garvey Ave WB	33.2
Gilman Rd NB	0
Gilman Rd SB	0
Glendon Way EB	27.5
Glendon Way WB	26.7
I-10 EB	45.5
I-10 EB Ramp	22.5
I-10 EB Ramp 2	24.1
I-10 WB	45
I-10 WB Ramp	12.5
Las Tunas Dr EB	33.6
Las Tunas Dr WB	33.3
Loftus Dr EB	22.4
Loftus Dr WB	25.3
Lower Azusa Rd EB	55.8
Lower Azusa Rd WB	56.3
Merced Ave NB	4.9
Merced Ave NB	19.6
Merced Ave SB	20.9
Olive St EB	20.5
Olive St WB	20.1
Olney St WB	7
Peck Rd NB	0
Peck Rd SB	0
Ramona Blvd EB	20.2
Ramona Blvd WB	20.7
Rio Hondo Ave NB	15.1
Rio Hondo Ave SB	14.8
Roseglen St NB	0
Roseglen St NB1	0
Roseglen St SB	0
Rosemead Blvd NB	63.5
Rosemead Blvd SB	62
Rush St EB	19.9
Rush St WB	14.9
San Gabriel Blvd NB	33.7

San Gabriel Blvd SB			34.3
Santa Anita Ave NB			30.7
Santa Anita Ave SB			31.1
Telstar Ave EB			30.8
Telstar Ave WB			26
Temple City Blvd NB			39
Temple City Blvd SB			37.5
Tyler Ave NB			24.3
Tyler Ave SB			27.3
Valley Blvd EB			43
Valley Blvd WB			43.6
Valley Mall NB			14.8
Valley Mall SB			12.5
Walnut Grove NB			38
Walnut Grove SB			38
Whitmore St			26.2
NE corner of Rosemead and Rush	GF	65.2	
Aerojet Ave NB			21.5
Aerojet Ave SB			21.2
Baldwin Ave NB			30.9
Baldwin Ave SB			29.6
Chico Ave SB			30.3
Durfee Ave NB			0
Durfee Ave NB (South)			0
Durfee Ave SB (South)			0
Flair Dr EB			26.5
Flair Dr WB			26.3
Fletcher Ave NB			13.7
Fletcher Ave SB			13.3
Garvey Ave EB			41.7
Garvey Ave WB			41.3
Gilman Rd NB			0
Gilman Rd SB			0
Glendon Way EB			22.6
Glendon Way WB			21.6
I-10 EB			44.8
I-10 EB Ramp			19.9
I-10 EB Ramp 2			22.3
I-10 WB			44.1
I-10 WB Ramp			11.9
Las Tunas Dr EB			0
Las Tunas Dr WB			0
Loftus Dr EB			20.8

Loftus Dr WB			23.7
Lower Azusa Rd EB			25.4
Lower Azusa Rd WB			25.4
Merced Ave NB			18.6
Merced Ave NB			27.3
Merced Ave SB			28.7
Olive St EB			0
Olive St WB			0
Olney St WB			6.1
Peck Rd NB			27.9
Peck Rd SB			28.3
Ramona Blvd EB			23.6
Ramona Blvd WB			24.2
Rio Hondo Ave NB			16.1
Rio Hondo Ave SB			15.8
Roseglen St NB			0
Roseglen St NB1			0
Roseglen St SB			0
Rosemead Blvd NB			62.2
Rosemead Blvd SB			60.4
Rush St EB			54.6
Rush St WB			50.8
San Gabriel Blvd NB			28.4
San Gabriel Blvd SB			29
Santa Anita Ave NB			32.6
Santa Anita Ave SB			33
Telstar Ave EB			32.9
Telstar Ave WB			28.2
Temple City Blvd NB			30.7
Temple City Blvd SB			30
Tyler Ave NB			28
Tyler Ave SB			27.3
Valley Blvd EB			34.8
Valley Blvd WB			34.7
Valley Mall NB			15.3
Valley Mall SB			13.1
Walnut Grove NB			33.9
Walnut Grove SB			33.4
Whitmore St			32.4
NE corner of Santa Anita and Valley	GF	67.5	
Aerojet Ave NB			17.8
Aerojet Ave SB			17.5
Baldwin Ave NB			40.5

Baldwin Ave SB	38.7
Chico Ave SB	18.8
Durfee Ave NB	15.2
Durfee Ave NB (South)	0
Durfee Ave SB (South)	17.1
Flair Dr EB	27.4
Flair Dr WB	27.7
Fletcher Ave NB	13.5
Fletcher Ave SB	12.9
Garvey Ave EB	38.3
Garvey Ave WB	38.5
Gilman Rd NB	12.1
Gilman Rd SB	16.8
Glendon Way EB	20
Glendon Way WB	19.2
I-10 EB	51
I-10 EB Ramp	16.3
I-10 EB Ramp 2	18.9
I-10 WB	50.7
I-10 WB Ramp	13.7
Las Tunas Dr EB	0
Las Tunas Dr WB	0
Loftus Dr EB	26.5
Loftus Dr WB	29.6
Lower Azusa Rd EB	38.6
Lower Azusa Rd WB	38.2
Merced Ave NB	7.1
Merced Ave NB	25.8
Merced Ave SB	27
Olive St EB	19.2
Olive St WB	18.8
Olney St WB	8.1
Peck Rd NB	39.3
Peck Rd SB	39.2
Ramona Blvd EB	40.4
Ramona Blvd WB	41
Rio Hondo Ave NB	13.7
Rio Hondo Ave SB	13.3
Roseglen St NB	14.7
Roseglen St NB1	10.6
Roseglen St SB	10.1
Rosemead Blvd NB	37.3
Rosemead Blvd SB	37.1

Rush St EB			24.4
Rush St WB			19.5
San Gabriel Blvd NB			0
San Gabriel Blvd SB			0
Santa Anita Ave NB			60.8
Santa Anita Ave SB			60.7
Telstar Ave EB			28.9
Telstar Ave WB			25.5
Temple City Blvd NB			36.9
Temple City Blvd SB			35.6
Tyler Ave NB			42.6
Tyler Ave SB			45
Valley Blvd EB			62.3
Valley Blvd WB			60.6
Valley Mall NB			42
Valley Mall SB			39.5
Walnut Grove NB			26.6
Walnut Grove SB			26.4
Whitmore St			25
NE corner of Tyler and Valley	GF	65.1	
Aerojet Ave NB			16.1
Aerojet Ave SB			15.8
Baldwin Ave NB			37.2
Baldwin Ave SB			35.6
Chico Ave SB			17.6
Durfee Ave NB			16.6
Durfee Ave NB (South)			0
Durfee Ave SB (South)			19.1
Flair Dr EB			25.1
Flair Dr WB			25.3
Fletcher Ave NB			11.3
Fletcher Ave SB			10.7
Garvey Ave EB			39
Garvey Ave WB			39.3
Gilman Rd NB			14
Gilman Rd SB			18.7
Glendon Way EB			18.4
Glendon Way WB			17.5
I-10 EB			51.9
I-10 EB Ramp			14.9
I-10 EB Ramp 2			17.4
I-10 WB			51.6
I-10 WB Ramp			11.3

Las Tunas Dr EB			0
Las Tunas Dr WB			0
Loftus Dr EB			23.6
Loftus Dr WB			26.8
Lower Azusa Rd EB			37.7
Lower Azusa Rd WB			37.3
Merced Ave NB			6
Merced Ave NB			24.6
Merced Ave SB			25.8
Olive St EB			17.7
Olive St WB			17.3
Olney St WB			5.6
Peck Rd NB			43.1
Peck Rd SB			43
Ramona Blvd EB			46.3
Ramona Blvd WB			47.1
Rio Hondo Ave NB			11.7
Rio Hondo Ave SB			11.4
Roseglen St NB			16
Roseglen St NB1			12.1
Roseglen St SB			11.4
Rosemead Blvd NB			35.5
Rosemead Blvd SB			35.3
Rush St EB			23.8
Rush St WB			18.8
San Gabriel Blvd NB			0
San Gabriel Blvd SB			0
Santa Anita Ave NB			45.6
Santa Anita Ave SB			45.8
Telstar Ave EB			27.3
Telstar Ave WB			23.5
Temple City Blvd NB			34.2
Temple City Blvd SB			32.9
Tyler Ave NB			54.5
Tyler Ave SB			57
Valley Blvd EB			60.6
Valley Blvd WB			58.5
Valley Mall NB			42
Valley Mall SB			39.4
Walnut Grove NB			0
Walnut Grove SB			0
Whitmore St			23.6
NE corner of Walnut Grove and Garvey	GF	64.3	

Aerojet Ave NB	25
Aerojet Ave SB	24.8
Baldwin Ave NB	30.3
Baldwin Ave SB	28.9
Chico Ave SB	21.7
Durfee Ave NB	0
Durfee Ave NB (South)	0
Durfee Ave SB (South)	0
Flair Dr EB	27.4
Flair Dr WB	26.9
Fletcher Ave NB	13
Fletcher Ave SB	12.5
Garvey Ave EB	58
Garvey Ave WB	58.8
Gilman Rd NB	0
Gilman Rd SB	0
Glendon Way EB	29
Glendon Way WB	28
I-10 EB	49.2
I-10 EB Ramp	26.9
I-10 EB Ramp 2	28.5
I-10 WB	48.7
I-10 WB Ramp	11.6
Las Tunas Dr EB	0
Las Tunas Dr WB	0
Loftus Dr EB	20.2
Loftus Dr WB	23
Lower Azusa Rd EB	28.5
Lower Azusa Rd WB	28.5
Merced Ave NB	9.9
Merced Ave NB	21.6
Merced Ave SB	22.9
Olive St EB	0
Olive St WB	0
Olney St WB	5.9
Peck Rd NB	0
Peck Rd SB	0
Ramona Blvd EB	14.6
Ramona Blvd WB	15.2
Rio Hondo Ave NB	17
Rio Hondo Ave SB	16.7
Roseglen St NB	0
Roseglen St NB1	0

Roseglen St SB			0
Rosemead Blvd NB			44.8
Rosemead Blvd SB			44.8
Rush St EB			29.6
Rush St WB			24.7
San Gabriel Blvd NB			37.9
San Gabriel Blvd SB			38.5
Santa Anita Ave NB			28.2
Santa Anita Ave SB			28.8
Telstar Ave EB			36.6
Telstar Ave WB			30.1
Temple City Blvd NB			31.8
Temple City Blvd SB			30.9
Tyler Ave NB			0
Tyler Ave SB			0
Valley Blvd EB			36.7
Valley Blvd WB			37
Valley Mall NB			8
Valley Mall SB			0
Walnut Grove NB			58
Walnut Grove SB			55.8
Whitmore St			33.1
NE corner of Walnut Grove and Valley	GF	64.7	
Aerojet Ave NB			23
Aerojet Ave SB			22.7
Baldwin Ave NB			33.4
Baldwin Ave SB			32
Chico Ave SB			17.4
Durfee Ave NB			0
Durfee Ave NB (South)			0
Durfee Ave SB (South)			0
Flair Dr EB			27
Flair Dr WB			26.6
Fletcher Ave NB			12.2
Fletcher Ave SB			11.7
Garvey Ave EB			35.4
Garvey Ave WB			35.1
Gilman Rd NB			0
Gilman Rd SB			0
Glendon Way EB			31.6
Glendon Way WB			30.8
I-10 EB			48.8
I-10 EB Ramp			25.2

I-10 EB Ramp 2	27
I-10 WB	48.6
I-10 WB Ramp	11.8
Las Tunas Dr EB	30.1
Las Tunas Dr WB	29.9
Loftus Dr EB	20.9
Loftus Dr WB	23.8
Lower Azusa Rd EB	35.9
Lower Azusa Rd WB	35.4
Merced Ave NB	5.7
Merced Ave NB	19.4
Merced Ave SB	20.7
Olive St EB	16.6
Olive St WB	16.2
Olney St WB	6.2
Peck Rd NB	0
Peck Rd SB	0
Ramona Blvd EB	14.4
Ramona Blvd WB	15.1
Rio Hondo Ave NB	15.6
Rio Hondo Ave SB	15.4
Roseglen St NB	0
Roseglen St NB1	0
Roseglen St SB	0
Rosemead Blvd NB	46.5
Rosemead Blvd SB	46.3
Rush St EB	23.9
Rush St WB	18.9
San Gabriel Blvd NB	40.4
San Gabriel Blvd SB	40.9
Santa Anita Ave NB	28.1
Santa Anita Ave SB	28.5
Telstar Ave EB	32.6
Telstar Ave WB	27.1
Temple City Blvd NB	35
Temple City Blvd SB	33.8
Tyler Ave NB	0
Tyler Ave SB	0
Valley Blvd EB	58.3
Valley Blvd WB	59
Valley Mall NB	8.5
Valley Mall SB	8.7
Walnut Grove NB	58.4

Walnut Grove SB			56.8
Whitmore St			27.6
NE of San Gabriel at I-10	GF	69.0	
Aerojet Ave NB			21.3
Aerojet Ave SB			21.1
Baldwin Ave NB			29.1
Baldwin Ave SB			27.6
Chico Ave SB			17
Durfee Ave NB			0
Durfee Ave NB (South)			0
Durfee Ave SB (South)			0
Flair Dr EB			25
Flair Dr WB			24.6
Fletcher Ave NB			10.2
Fletcher Ave SB			9.7
Garvey Ave EB			37.2
Garvey Ave WB			36.9
Gilman Rd NB			0
Gilman Rd SB			0
Glendon Way EB			28.2
Glendon Way WB			27.3
I-10 EB			63.7
I-10 EB Ramp			24.2
I-10 EB Ramp 2			25.8
I-10 WB			65.8
I-10 WB Ramp			9.4
Las Tunas Dr EB			25.8
Las Tunas Dr WB			25.6
Loftus Dr EB			18.3
Loftus Dr WB			21.2
Lower Azusa Rd EB			29.6
Lower Azusa Rd WB			29.5
Merced Ave NB			5.3
Merced Ave NB			18.3
Merced Ave SB			19.6
Olive St EB			0
Olive St WB			0
Olney St WB			3.7
Peck Rd NB			0
Peck Rd SB			0
Ramona Blvd EB			0
Ramona Blvd WB			0
Rio Hondo Ave NB			13.8

Rio Hondo Ave SB			13.5
Roseglen St NB			0
Roseglen St NB1			0
Roseglen St SB			0
Rosemead Blvd NB			41.9
Rosemead Blvd SB			41.6
Rush St EB			24.5
Rush St WB			19.5
San Gabriel Blvd NB			59.9
San Gabriel Blvd SB			58.6
Santa Anita Ave NB			0
Santa Anita Ave SB			0
Telstar Ave EB			31.5
Telstar Ave WB			25.8
Temple City Blvd NB			31.4
Temple City Blvd SB			30.3
Tyler Ave NB			0
Tyler Ave SB			0
Valley Blvd EB			42.5
Valley Blvd WB			42.6
Valley Mall NB			0
Valley Mall SB			0
Walnut Grove NB			43.2
Walnut Grove SB			43.1
Whitmore St			27
NW Corner of Aerojet and Telstar	GF	68.8	
Aerojet Ave NB			54.9
Aerojet Ave SB			55.6
Baldwin Ave NB			36.2
Baldwin Ave SB			35
Chico Ave SB			26.3
Durfee Ave NB			0
Durfee Ave NB (South)			0
Durfee Ave SB (South)			0
Flair Dr EB			40.7
Flair Dr WB			39.8
Fletcher Ave NB			21.9
Fletcher Ave SB			21.5
Garvey Ave EB			44.4
Garvey Ave WB			44
Gilman Rd NB			0
Gilman Rd SB			0
Glendon Way EB			35.4

Glendon Way WB	34.3
I-10 EB	57.5
I-10 EB Ramp	36
I-10 EB Ramp 2	40.6
I-10 WB	56.4
I-10 WB Ramp	19.7
Las Tunas Dr EB	23.2
Las Tunas Dr WB	23
Loftus Dr EB	26.7
Loftus Dr WB	29.6
Lower Azusa Rd EB	33.1
Lower Azusa Rd WB	33
Merced Ave NB	14.5
Merced Ave NB	26
Merced Ave SB	27.3
Olive St EB	15.6
Olive St WB	15.2
Olney St WB	14
Peck Rd NB	27.1
Peck Rd SB	27.7
Ramona Blvd EB	24.3
Ramona Blvd WB	24.9
Rio Hondo Ave NB	30.5
Rio Hondo Ave SB	30.3
Roseglen St NB	0
Roseglen St NB1	0
Roseglen St SB	0
Rosemead Blvd NB	59.4
Rosemead Blvd SB	59
Rush St EB	30.2
Rush St WB	25.3
San Gabriel Blvd NB	33.6
San Gabriel Blvd SB	34.1
Santa Anita Ave NB	33.4
Santa Anita Ave SB	33.8
Telstar Ave EB	63.7
Telstar Ave WB	62.4
Temple City Blvd NB	37.3
Temple City Blvd SB	36.8
Tyler Ave NB	28.2
Tyler Ave SB	28.8
Valley Blvd EB	40.1
Valley Blvd WB	40.5

Valley Mall NB			16.6
Valley Mall SB			14.3
Walnut Grove NB			39.5
Walnut Grove SB			38.9
Whitmore St			46
NW corner of Baldwin and Olive	GF	60.2	
Aerojet Ave NB			14.8
Aerojet Ave SB			14.5
Baldwin Ave NB			56.1
Baldwin Ave SB			56
Chico Ave SB			0
Durfee Ave NB			0
Durfee Ave NB (South)			0
Durfee Ave SB (South)			0
Flair Dr EB			21.9
Flair Dr WB			21.9
Fletcher Ave NB			8
Fletcher Ave SB			7.5
Garvey Ave EB			0
Garvey Ave WB			0
Gilman Rd NB			0
Gilman Rd SB			0
Glendon Way EB			18.7
Glendon Way WB			17.9
I-10 EB			40.1
I-10 EB Ramp			14.1
I-10 EB Ramp 2			16.5
I-10 WB			39.5
I-10 WB Ramp			8.3
Las Tunas Dr EB			33.5
Las Tunas Dr WB			33.4
Loftus Dr EB			19.4
Loftus Dr WB			22.4
Lower Azusa Rd EB			40.4
Lower Azusa Rd WB			40.2
Merced Ave NB			0
Merced Ave NB			15.2
Merced Ave SB			16.7
Olive St EB			48.6
Olive St WB			49
Olney St WB			2.8
Peck Rd NB			30.6
Peck Rd SB			29.9

Ramona Blvd EB			25.5
Ramona Blvd WB			26.1
Rio Hondo Ave NB			9.6
Rio Hondo Ave SB			9.3
Roseglen St NB			0
Roseglen St NB1			0
Roseglen St SB			0
Rosemead Blvd NB			37.6
Rosemead Blvd SB			37.3
Rush St EB			0
Rush St WB			0
San Gabriel Blvd NB			0
San Gabriel Blvd SB			0
Santa Anita Ave NB			32.3
Santa Anita Ave SB			32.6
Telstar Ave EB			25
Telstar Ave WB			20.7
Temple City Blvd NB			38.6
Temple City Blvd SB			36.7
Tyler Ave NB			30.8
Tyler Ave SB			33
Valley Blvd EB			35.6
Valley Blvd WB			35.8
Valley Mall NB			16.2
Valley Mall SB			13.9
Walnut Grove NB			25.5
Walnut Grove SB			25.5
Whitmore St			0
NW corner of Glendon and Rosemead	GF	70.0	
Aerojet Ave NB			32.7
Aerojet Ave SB			32.5
Baldwin Ave NB			35.6
Baldwin Ave SB			34.2
Chico Ave SB			21.6
Durfee Ave NB			0
Durfee Ave NB (South)			0
Durfee Ave SB (South)			0
Flair Dr EB			34.8
Flair Dr WB			34.2
Fletcher Ave NB			17.7
Fletcher Ave SB			17.2
Garvey Ave EB			39.7
Garvey Ave WB			39.4

Gilman Rd NB	0
Gilman Rd SB	0
Glendon Way EB	56.5
Glendon Way WB	57
I-10 EB	60
I-10 EB Ramp	40.2
I-10 EB Ramp 2	42.3
I-10 WB	59.7
I-10 WB Ramp	16.7
Las Tunas Dr EB	27.9
Las Tunas Dr WB	27.7
Loftus Dr EB	25.1
Loftus Dr WB	27.9
Lower Azusa Rd EB	35
Lower Azusa Rd WB	34.9
Merced Ave NB	9.9
Merced Ave NB	22.9
Merced Ave SB	24.2
Olive St EB	16.5
Olive St WB	16.1
Olney St WB	11.2
Peck Rd NB	0
Peck Rd SB	0
Ramona Blvd EB	23
Ramona Blvd WB	23.6
Rio Hondo Ave NB	22.8
Rio Hondo Ave SB	22.5
Roseglen St NB	0
Roseglen St NB1	0
Roseglen St SB	0
Rosemead Blvd NB	65.2
Rosemead Blvd SB	65.5
Rush St EB	27.1
Rush St WB	22.1
San Gabriel Blvd NB	36.2
San Gabriel Blvd SB	36.7
Santa Anita Ave NB	31.9
Santa Anita Ave SB	32.2
Telstar Ave EB	41
Telstar Ave WB	34.8
Temple City Blvd NB	37.3
Temple City Blvd SB	36.5
Tyler Ave NB	26.9

Tyler Ave SB			27.7
Valley Blvd EB			44
Valley Blvd WB			44.3
Valley Mall NB			15.5
Valley Mall SB			13.3
Walnut Grove NB			42.7
Walnut Grove SB			42.2
Whitmore St			34.4
NW corner of Merced and Garvey	GF	62.4	
Aerojet Ave NB			22.9
Aerojet Ave SB			22.5
Baldwin Ave NB			37.8
Baldwin Ave SB			36.7
Chico Ave SB			30.4
Durfee Ave NB			0
Durfee Ave NB (South)			0
Durfee Ave SB (South)			0
Flair Dr EB			32.3
Flair Dr WB			32.5
Fletcher Ave NB			19.9
Fletcher Ave SB			19.4
Garvey Ave EB			56.2
Garvey Ave WB			56.9
Gilman Rd NB			0
Gilman Rd SB			0
Glendon Way EB			23.3
Glendon Way WB			22.4
I-10 EB			51.5
I-10 EB Ramp			20.2
I-10 EB Ramp 2			22.9
I-10 WB			50.7
I-10 WB Ramp			18.1
Las Tunas Dr EB			0
Las Tunas Dr WB			0
Loftus Dr EB			27.7
Loftus Dr WB			30.6
Lower Azusa Rd EB			32.7
Lower Azusa Rd WB			32.2
Merced Ave NB			19
Merced Ave NB			52.2
Merced Ave SB			54.2
Olive St EB			15.1
Olive St WB			14.7

Olney St WB			12.2
Peck Rd NB			34.4
Peck Rd SB			34.5
Ramona Blvd EB			31.9
Ramona Blvd WB			32.4
Rio Hondo Ave NB			19.4
Rio Hondo Ave SB			19.1
Roseglen St NB			0
Roseglen St NB1			0
Roseglen St SB			0
Rosemead Blvd NB			42.9
Rosemead Blvd SB			42.7
Rush St EB			32.4
Rush St WB			27.5
San Gabriel Blvd NB			26.6
San Gabriel Blvd SB			27.8
Santa Anita Ave NB			41.1
Santa Anita Ave SB			41.6
Telstar Ave EB			34.9
Telstar Ave WB			32.1
Temple City Blvd NB			35.9
Temple City Blvd SB			35.2
Tyler Ave NB			34.8
Tyler Ave SB			34.9
Valley Blvd EB			39.7
Valley Blvd WB			39.4
Valley Mall NB			21.7
Valley Mall SB			19.4
Walnut Grove NB			31.9
Walnut Grove SB			31.5
Whitmore St			32.6
NW corner of Peck and Lower Azusa	GF	63.6	
Aerojet Ave NB			0
Aerojet Ave SB			0
Baldwin Ave NB			31.4
Baldwin Ave SB			29.8
Chico Ave SB			0
Durfee Ave NB			24.4
Durfee Ave NB (South)			0
Durfee Ave SB (South)			20.9
Flair Dr EB			0
Flair Dr WB			0
Fletcher Ave NB			0

Fletcher Ave SB	0
Garvey Ave EB	28.9
Garvey Ave WB	29.2
Gilman Rd NB	16.5
Gilman Rd SB	21.2
Glendon Way EB	0
Glendon Way WB	0
I-10 EB	40.3
I-10 EB Ramp	0
I-10 EB Ramp 2	0
I-10 WB	40.4
I-10 WB Ramp	0
Las Tunas Dr EB	0
Las Tunas Dr WB	0
Loftus Dr EB	12.3
Loftus Dr WB	15.8
Lower Azusa Rd EB	57
Lower Azusa Rd WB	57.6
Merced Ave NB	0
Merced Ave NB	0
Merced Ave SB	0
Olive St EB	16.9
Olive St WB	16.5
Olney St WB	0
Peck Rd NB	57.4
Peck Rd SB	57.9
Ramona Blvd EB	35.5
Ramona Blvd WB	35.6
Rio Hondo Ave NB	0
Rio Hondo Ave SB	0
Roseglen St NB	27.4
Roseglen St NB1	19.9
Roseglen St SB	22.9
Rosemead Blvd NB	0
Rosemead Blvd SB	0
Rush St EB	0
Rush St WB	0
San Gabriel Blvd NB	0
San Gabriel Blvd SB	0
Santa Anita Ave NB	33.9
Santa Anita Ave SB	34.3
Telstar Ave EB	0
Telstar Ave WB	0

Temple City Blvd NB			26.7
Temple City Blvd SB			24.5
Tyler Ave NB			37.1
Tyler Ave SB			39.1
Valley Blvd EB			34.3
Valley Blvd WB			33.3
Valley Mall NB			17.5
Valley Mall SB			15.2
Walnut Grove NB			0
Walnut Grove SB			0
Whitmore St			0
NW corner of Rio Hondo and Telstar	GF	65.8	
Aerojet Ave NB			38.1
Aerojet Ave SB			37.7
Baldwin Ave NB			38.2
Baldwin Ave SB			37
Chico Ave SB			28.5
Durfee Ave NB			0
Durfee Ave NB (South)			0
Durfee Ave SB (South)			0
Flair Dr EB			42.7
Flair Dr WB			42
Fletcher Ave NB			28.6
Fletcher Ave SB			28.1
Garvey Ave EB			44.5
Garvey Ave WB			44.2
Gilman Rd NB			0
Gilman Rd SB			0
Glendon Way EB			31.6
Glendon Way WB			30.7
I-10 EB			57.3
I-10 EB Ramp			29.4
I-10 EB Ramp 2			33
I-10 WB			56.1
I-10 WB Ramp			23.9
Las Tunas Dr EB			20.1
Las Tunas Dr WB			19.9
Loftus Dr EB			29.7
Loftus Dr WB			32.4
Lower Azusa Rd EB			33.8
Lower Azusa Rd WB			33.5
Merced Ave NB			16.8
Merced Ave NB			28.4

Merced Ave SB			29.7
Olive St EB			16
Olive St WB			15.6
Olney St WB			18.2
Peck Rd NB			28.9
Peck Rd SB			29.2
Ramona Blvd EB			26.6
Ramona Blvd WB			27.3
Rio Hondo Ave NB			50.5
Rio Hondo Ave SB			51.8
Roseglen St NB			0
Roseglen St NB1			0
Roseglen St SB			0
Rosemead Blvd NB			51.6
Rosemead Blvd SB			51.4
Rush St EB			30.7
Rush St WB			25.7
San Gabriel Blvd NB			31.9
San Gabriel Blvd SB			32.4
Santa Anita Ave NB			35
Santa Anita Ave SB			35.4
Telstar Ave EB			60.1
Telstar Ave WB			60.3
Temple City Blvd NB			39.3
Temple City Blvd SB			39
Tyler Ave NB			29.9
Tyler Ave SB			30.7
Valley Blvd EB			40.4
Valley Blvd WB			40.7
Valley Mall NB			18.1
Valley Mall SB			15.8
Walnut Grove NB			37.1
Walnut Grove SB			36.6
Whitmore St			45.7
NW corner of San Gabriel and Valley	GF	66.6	
Aerojet Ave NB			19.3
Aerojet Ave SB			19
Baldwin Ave NB			28.8
Baldwin Ave SB			27.7
Chico Ave SB			15.3
Durfee Ave NB			0
Durfee Ave NB (South)			0
Durfee Ave SB (South)			0

Flair Dr EB	23.3
Flair Dr WB	23
Fletcher Ave NB	8.9
Fletcher Ave SB	8.4
Garvey Ave EB	33.6
Garvey Ave WB	33.2
Gilman Rd NB	0
Gilman Rd SB	0
Glendon Way EB	26.1
Glendon Way WB	25.3
I-10 EB	47.6
I-10 EB Ramp	21.1
I-10 EB Ramp 2	22.9
I-10 WB	47.5
I-10 WB Ramp	8.3
Las Tunas Dr EB	28.7
Las Tunas Dr WB	28.5
Loftus Dr EB	17.6
Loftus Dr WB	20.5
Lower Azusa Rd EB	30.6
Lower Azusa Rd WB	30.4
Merced Ave NB	3.5
Merced Ave NB	6.4
Merced Ave SB	7.6
Olive St EB	9.5
Olive St WB	9.2
Olney St WB	2.7
Peck Rd NB	0
Peck Rd SB	0
Ramona Blvd EB	0
Ramona Blvd WB	0
Rio Hondo Ave NB	12.1
Rio Hondo Ave SB	11.9
Roseglen St NB	0
Roseglen St NB1	0
Roseglen St SB	0
Rosemead Blvd NB	41
Rosemead Blvd SB	40.8
Rush St EB	19.9
Rush St WB	15
San Gabriel Blvd NB	56.7
San Gabriel Blvd SB	59
Santa Anita Ave NB	0

Santa Anita Ave SB			0
Telstar Ave EB			29.2
Telstar Ave WB			23.9
Temple City Blvd NB			31.4
Temple City Blvd SB			30.2
Tyler Ave NB			0
Tyler Ave SB			0
Valley Blvd EB			60.5
Valley Blvd WB			63
Valley Mall NB			0
Valley Mall SB			0
Walnut Grove NB			40.7
Walnut Grove SB			40.8
Whitmore St			24.9
NW corner of Tyler and Garvey	GF	65.5	
Aerojet Ave NB			16.8
Aerojet Ave SB			16.4
Baldwin Ave NB			34.2
Baldwin Ave SB			32.8
Chico Ave SB			20.3
Durfee Ave NB			11.4
Durfee Ave NB (South)			0
Durfee Ave SB (South)			17.5
Flair Dr EB			25.2
Flair Dr WB			25.4
Fletcher Ave NB			11.9
Fletcher Ave SB			11.4
Garvey Ave EB			57.9
Garvey Ave WB			59.3
Gilman Rd NB			12.6
Gilman Rd SB			17.3
Glendon Way EB			18.5
Glendon Way WB			17.6
I-10 EB			54.8
I-10 EB Ramp			15
I-10 EB Ramp 2			17.5
I-10 WB			54.1
I-10 WB Ramp			11.3
Las Tunas Dr EB			0
Las Tunas Dr WB			0
Loftus Dr EB			22.4
Loftus Dr WB			25.4
Lower Azusa Rd EB			33.3

Lower Azusa Rd WB			33.1
Merced Ave NB			8.7
Merced Ave NB			28.4
Merced Ave SB			29.6
Olive St EB			0
Olive St WB			0
Olney St WB			5.5
Peck Rd NB			44.5
Peck Rd SB			45.1
Ramona Blvd EB			37.7
Ramona Blvd WB			38.1
Rio Hondo Ave NB			12.4
Rio Hondo Ave SB			12.1
Roseglen St NB			0
Roseglen St NB1			6.9
Roseglen St SB			0
Rosemead Blvd NB			36.3
Rosemead Blvd SB			36.1
Rush St EB			27
Rush St WB			22.1
San Gabriel Blvd NB			0
San Gabriel Blvd SB			0
Santa Anita Ave NB			44.8
Santa Anita Ave SB			45
Telstar Ave EB			28.1
Telstar Ave WB			24.3
Temple City Blvd NB			32.2
Temple City Blvd SB			31.1
Tyler Ave NB			58.8
Tyler Ave SB			57.5
Valley Blvd EB			42.7
Valley Blvd WB			41.7
Valley Mall NB			25.8
Valley Mall SB			23.5
Walnut Grove NB			0
Walnut Grove SB			0
Whitmore St			24.9
NW corner of Tyler and Ramona	GF	64.3	
Aerojet Ave NB			17.1
Aerojet Ave SB			16.8
Baldwin Ave NB			37.6
Baldwin Ave SB			36
Chico Ave SB			19

Durfee Ave NB	15.6
Durfee Ave NB (South)	0
Durfee Ave SB (South)	18.2
Flair Dr EB	26.5
Flair Dr WB	26.7
Fletcher Ave NB	12.5
Fletcher Ave SB	12
Garvey Ave EB	40.7
Garvey Ave WB	41
Gilman Rd NB	13.1
Gilman Rd SB	17.8
Glendon Way EB	19.1
Glendon Way WB	18.2
I-10 EB	55.8
I-10 EB Ramp	15.4
I-10 EB Ramp 2	18.2
I-10 WB	55.3
I-10 WB Ramp	12.5
Las Tunas Dr EB	0
Las Tunas Dr WB	0
Loftus Dr EB	24.5
Loftus Dr WB	27.6
Lower Azusa Rd EB	36.7
Lower Azusa Rd WB	36.3
Merced Ave NB	7.4
Merced Ave NB	26.5
Merced Ave SB	27.7
Olive St EB	17.2
Olive St WB	16.8
Olney St WB	6.8
Peck Rd NB	42.2
Peck Rd SB	42.4
Ramona Blvd EB	55
Ramona Blvd WB	56.4
Rio Hondo Ave NB	12.8
Rio Hondo Ave SB	12.5
Roseglen St NB	14.8
Roseglen St NB1	11
Roseglen St SB	10.3
Rosemead Blvd NB	36.3
Rosemead Blvd SB	36.2
Rush St EB	25
Rush St WB	20

San Gabriel Blvd NB			0
San Gabriel Blvd SB			0
Santa Anita Ave NB			47.1
Santa Anita Ave SB			47.2
Telstar Ave EB			28.4
Telstar Ave WB			24.7
Temple City Blvd NB			34.6
Temple City Blvd SB			33.4
Tyler Ave NB			55.4
Tyler Ave SB			55.6
Valley Blvd EB			52.6
Valley Blvd WB			50.1
Valley Mall NB			42
Valley Mall SB			40
Walnut Grove NB			0
Walnut Grove SB			0
Whitmore St			24.6
NW corner of Valley and Garvey	GF	65.8	
Aerojet Ave NB			0
Aerojet Ave SB			0
Baldwin Ave NB			30.1
Baldwin Ave SB			28.5
Chico Ave SB			15.4
Durfee Ave NB			17.2
Durfee Ave NB (South)			0
Durfee Ave SB (South)			22.7
Flair Dr EB			19.7
Flair Dr WB			20
Fletcher Ave NB			7.3
Fletcher Ave SB			6.8
Garvey Ave EB			59.3
Garvey Ave WB			61.1
Gilman Rd NB			17.4
Gilman Rd SB			22.1
Glendon Way EB			0
Glendon Way WB			0
I-10 EB			55.2
I-10 EB Ramp			0
I-10 EB Ramp 2			0
I-10 WB			55
I-10 WB Ramp			6.7
Las Tunas Dr EB			0
Las Tunas Dr WB			0

Loftus Dr EB			17.8
Loftus Dr WB			20.7
Lower Azusa Rd EB			32.8
Lower Azusa Rd WB			32.5
Merced Ave NB			3.8
Merced Ave NB			21.7
Merced Ave SB			22.9
Olive St EB			0
Olive St WB			0
Olney St WB			1.2
Peck Rd NB			43.5
Peck Rd SB			43.5
Ramona Blvd EB			38.6
Ramona Blvd WB			38.8
Rio Hondo Ave NB			8.2
Rio Hondo Ave SB			7.9
Roseglen St NB			15.5
Roseglen St NB1			12.6
Roseglen St SB			10.9
Rosemead Blvd NB			25.8
Rosemead Blvd SB			25.5
Rush St EB			21.8
Rush St WB			16.7
San Gabriel Blvd NB			0
San Gabriel Blvd SB			0
Santa Anita Ave NB			36.1
Santa Anita Ave SB			36.4
Telstar Ave EB			18.1
Telstar Ave WB			17.6
Temple City Blvd NB			26.7
Temple City Blvd SB			26
Tyler Ave NB			36.4
Tyler Ave SB			36.6
Valley Blvd EB			57.3
Valley Blvd WB			55.6
Valley Mall NB			21.8
Valley Mall SB			19.5
Walnut Grove NB			0
Walnut Grove SB			0
Whitmore St			0
NW of Santa Anita at I-10	GF	71.7	
Aerojet Ave NB			19.4
Aerojet Ave SB			19

Baldwin Ave NB	39.4
Baldwin Ave SB	37.9
Chico Ave SB	22
Durfee Ave NB	0
Durfee Ave NB (South)	0
Durfee Ave SB (South)	16.1
Flair Dr EB	29.7
Flair Dr WB	30.2
Fletcher Ave NB	15.7
Fletcher Ave SB	15.2
Garvey Ave EB	43.2
Garvey Ave WB	43.5
Gilman Rd NB	11.3
Gilman Rd SB	16
Glendon Way EB	21.1
Glendon Way WB	20.2
I-10 EB	67.6
I-10 EB Ramp	17.3
I-10 EB Ramp 2	19.9
I-10 WB	68
I-10 WB Ramp	16
Las Tunas Dr EB	0
Las Tunas Dr WB	0
Loftus Dr EB	27.8
Loftus Dr WB	30.9
Lower Azusa Rd EB	35.5
Lower Azusa Rd WB	35.2
Merced Ave NB	10.4
Merced Ave NB	31.6
Merced Ave SB	32.7
Olive St EB	16.8
Olive St WB	16.4
Olney St WB	10.5
Peck Rd NB	39.1
Peck Rd SB	39.1
Ramona Blvd EB	43.3
Ramona Blvd WB	43.7
Rio Hondo Ave NB	15.5
Rio Hondo Ave SB	15.2
Roseglen St NB	0
Roseglen St NB1	0
Roseglen St SB	0
Rosemead Blvd NB	38.7

Rosemead Blvd SB			38.5
Rush St EB			27.2
Rush St WB			22.3
San Gabriel Blvd NB			0
San Gabriel Blvd SB			0
Santa Anita Ave NB			60.2
Santa Anita Ave SB			61.7
Telstar Ave EB			30.7
Telstar Ave WB			27.7
Temple City Blvd NB			36.1
Temple City Blvd SB			35.2
Tyler Ave NB			41.7
Tyler Ave SB			41.2
Valley Blvd EB			45.3
Valley Blvd WB			44.4
Valley Mall NB			30.5
Valley Mall SB			28.3
Walnut Grove NB			29.5
Walnut Grove SB			29.1
Whitmore St			27.3
SE corner of Aerojet and Flair	GF	71.0	
Aerojet Ave NB			52.2
Aerojet Ave SB			51.2
Baldwin Ave NB			37.6
Baldwin Ave SB			36.4
Chico Ave SB			25.2
Durfee Ave NB			0
Durfee Ave NB (South)			0
Durfee Ave SB (South)			0
Flair Dr EB			55.4
Flair Dr WB			53.6
Fletcher Ave NB			23.6
Fletcher Ave SB			23.1
Garvey Ave EB			42.2
Garvey Ave WB			41.9
Gilman Rd NB			0
Gilman Rd SB			0
Glendon Way EB			37.3
Glendon Way WB			36.3
I-10 EB			68.2
I-10 EB Ramp			35.1
I-10 EB Ramp 2			40
I-10 WB			66.5

I-10 WB Ramp	22.5
Las Tunas Dr EB	26.8
Las Tunas Dr WB	26.6
Loftus Dr EB	28.6
Loftus Dr WB	31.4
Lower Azusa Rd EB	34.4
Lower Azusa Rd WB	34.3
Merced Ave NB	13.5
Merced Ave NB	26
Merced Ave SB	27.3
Olive St EB	16.4
Olive St WB	16
Olney St WB	16.8
Peck Rd NB	26.7
Peck Rd SB	27.3
Ramona Blvd EB	25.8
Ramona Blvd WB	26.3
Rio Hondo Ave NB	33.6
Rio Hondo Ave SB	33.4
Roseglen St NB	0
Roseglen St NB1	0
Roseglen St SB	0
Rosemead Blvd NB	53.1
Rosemead Blvd SB	52.6
Rush St EB	29.1
Rush St WB	24.2
San Gabriel Blvd NB	33.4
San Gabriel Blvd SB	33.9
Santa Anita Ave NB	33.9
Santa Anita Ave SB	34.3
Telstar Ave EB	49.1
Telstar Ave WB	44.4
Temple City Blvd NB	39.1
Temple City Blvd SB	38.9
Tyler Ave NB	28.9
Tyler Ave SB	29.8
Valley Blvd EB	41.4
Valley Blvd WB	41.9
Valley Mall NB	17.2
Valley Mall SB	15
Walnut Grove NB	38.9
Walnut Grove SB	38.4
Whitmore St	41

SE corner of Baldwin and Valley	GF	66.1	
Aerojet Ave NB			22.7
Aerojet Ave SB			22.4
Baldwin Ave NB			62.3
Baldwin Ave SB			58.3
Chico Ave SB			21.4
Durfee Ave NB			0
Durfee Ave NB (South)			0
Durfee Ave SB (South)			0
Flair Dr EB			34.9
Flair Dr WB			35.4
Fletcher Ave NB			20
Fletcher Ave SB			19.4
Garvey Ave EB			38.4
Garvey Ave WB			38.4
Gilman Rd NB			0
Gilman Rd SB			0
Glendon Way EB			24.6
Glendon Way WB			23.8
I-10 EB			53.2
I-10 EB Ramp			20.6
I-10 EB Ramp 2			23.3
I-10 WB			52.6
I-10 WB Ramp			22
Las Tunas Dr EB			27.4
Las Tunas Dr WB			27.2
Loftus Dr EB			39.5
Loftus Dr WB			43
Lower Azusa Rd EB			39
Lower Azusa Rd WB			38.8
Merced Ave NB			9.8
Merced Ave NB			27.5
Merced Ave SB			28.7
Olive St EB			20.2
Olive St WB			19.8
Olney St WB			16.6
Peck Rd NB			34.4
Peck Rd SB			34.3
Ramona Blvd EB			32.5
Ramona Blvd WB			33.1
Rio Hondo Ave NB			19.3
Rio Hondo Ave SB			19
Roseglen St NB			0

Roseglen St NB1			0
Roseglen St SB			0
Rosemead Blvd NB			41.4
Rosemead Blvd SB			41.1
Rush St EB			26
Rush St WB			21
San Gabriel Blvd NB			28.3
San Gabriel Blvd SB			28.9
Santa Anita Ave NB			40.4
Santa Anita Ave SB			40.7
Telstar Ave EB			33.9
Telstar Ave WB			31.1
Temple City Blvd NB			45.4
Temple City Blvd SB			44.6
Tyler Ave NB			34.6
Tyler Ave SB			36.1
Valley Blvd EB			57.9
Valley Blvd WB			57.3
Valley Mall NB			24.7
Valley Mall SB			22.3
Walnut Grove NB			32
Walnut Grove SB			31.7
Whitmore St			29.5
SE corner of Chico and Garvey	GF	64.3	
Aerojet Ave NB			26
Aerojet Ave SB			25.6
Baldwin Ave NB			36.3
Baldwin Ave SB			35.1
Chico Ave SB			50
Durfee Ave NB			0
Durfee Ave NB (South)			0
Durfee Ave SB (South)			0
Flair Dr EB			32.6
Flair Dr WB			32.5
Fletcher Ave NB			21.2
Fletcher Ave SB			20.8
Garvey Ave EB			60.9
Garvey Ave WB			59.7
Gilman Rd NB			0
Gilman Rd SB			0
Glendon Way EB			25.4
Glendon Way WB			24.5
I-10 EB			49.5

I-10 EB Ramp	22.7
I-10 EB Ramp 2	25.5
I-10 WB	48.7
I-10 WB Ramp	18.2
Las Tunas Dr EB	0
Las Tunas Dr WB	0
Loftus Dr EB	26.4
Loftus Dr WB	29.2
Lower Azusa Rd EB	31.2
Lower Azusa Rd WB	31
Merced Ave NB	40.7
Merced Ave NB	34.2
Merced Ave SB	35.6
Olive St EB	0
Olive St WB	0
Olney St WB	12.3
Peck Rd NB	31.1
Peck Rd SB	31.3
Ramona Blvd EB	28.2
Ramona Blvd WB	28.7
Rio Hondo Ave NB	22.4
Rio Hondo Ave SB	22.1
Roseglen St NB	0
Roseglen St NB1	0
Roseglen St SB	0
Rosemead Blvd NB	48.9
Rosemead Blvd SB	48.6
Rush St EB	35.4
Rush St WB	30.6
San Gabriel Blvd NB	29.3
San Gabriel Blvd SB	29.9
Santa Anita Ave NB	36.6
Santa Anita Ave SB	37
Telstar Ave EB	37.8
Telstar Ave WB	34.6
Temple City Blvd NB	35.4
Temple City Blvd SB	34.9
Tyler Ave NB	31.4
Tyler Ave SB	31.7
Valley Blvd EB	38.2
Valley Blvd WB	38.2
Valley Mall NB	18.7
Valley Mall SB	16.4

Walnut Grove NB			34.2
Walnut Grove SB			33.7
Whitmore St			38.3
SE corner of Rosemead and Garvey	GF	66.8	
Aerojet Ave NB			28.4
Aerojet Ave SB			28.1
Baldwin Ave NB			35.1
Baldwin Ave SB			33.8
Chico Ave SB			38.2
Durfee Ave NB			0
Durfee Ave NB (South)			0
Durfee Ave SB (South)			0
Flair Dr EB			32.6
Flair Dr WB			32.3
Fletcher Ave NB			20.6
Fletcher Ave SB			20.1
Garvey Ave EB			61.4
Garvey Ave WB			60.7
Gilman Rd NB			0
Gilman Rd SB			0
Glendon Way EB			27.1
Glendon Way WB			26.1
I-10 EB			49.4
I-10 EB Ramp			24.9
I-10 EB Ramp 2			27.8
I-10 WB			48.5
I-10 WB Ramp			17.5
Las Tunas Dr EB			0
Las Tunas Dr WB			0
Loftus Dr EB			25.4
Loftus Dr WB			28.2
Lower Azusa Rd EB			30.8
Lower Azusa Rd WB			30.6
Merced Ave NB			26.4
Merced Ave NB			29.9
Merced Ave SB			31.3
Olive St EB			0
Olive St WB			0
Olney St WB			11.7
Peck Rd NB			29
Peck Rd SB			29.3
Ramona Blvd EB			26
Ramona Blvd WB			26.6

Rio Hondo Ave NB			23.8
Rio Hondo Ave SB			23.6
Roseglen St NB			0
Roseglen St NB1			0
Roseglen St SB			0
Rosemead Blvd NB			60.4
Rosemead Blvd SB			59.6
Rush St EB			35.7
Rush St WB			30.8
San Gabriel Blvd NB			30.7
San Gabriel Blvd SB			31.3
Santa Anita Ave NB			34.6
Santa Anita Ave SB			35
Telstar Ave EB			40.3
Telstar Ave WB			35.9
Temple City Blvd NB			35
Temple City Blvd SB			34.5
Tyler Ave NB			29.7
Tyler Ave SB			30
Valley Blvd EB			37.7
Valley Blvd WB			37.8
Valley Mall NB			17.3
Valley Mall SB			15
Walnut Grove NB			36.1
Walnut Grove SB			35.6
Whitmore St			44.3
SE corner of Temple City at Loftus	GF	68.2	
Aerojet Ave NB			27.4
Aerojet Ave SB			27.1
Baldwin Ave NB			47.4
Baldwin Ave SB			46.7
Chico Ave SB			24.3
Durfee Ave NB			0
Durfee Ave NB (South)			0
Durfee Ave SB (South)			0
Flair Dr EB			44.4
Flair Dr WB			44.8
Fletcher Ave NB			30
Fletcher Ave SB			29.4
Garvey Ave EB			40.3
Garvey Ave WB			40.3
Gilman Rd NB			0
Gilman Rd SB			0

Glendon Way EB	27.9
Glendon Way WB	27.2
I-10 EB	63
I-10 EB Ramp	24.4
I-10 EB Ramp 2	27.2
I-10 WB	61.8
I-10 WB Ramp	38.5
Las Tunas Dr EB	27
Las Tunas Dr WB	26.8
Loftus Dr EB	54.9
Loftus Dr WB	56.4
Lower Azusa Rd EB	36.9
Lower Azusa Rd WB	36.7
Merced Ave NB	12.7
Merced Ave NB	29.1
Merced Ave SB	30.4
Olive St EB	18.5
Olive St WB	18.1
Olney St WB	33.2
Peck Rd NB	32.6
Peck Rd SB	32.5
Ramona Blvd EB	30.3
Ramona Blvd WB	30.8
Rio Hondo Ave NB	25.8
Rio Hondo Ave SB	25.4
Roseglen St NB	0
Roseglen St NB1	0
Roseglen St SB	0
Rosemead Blvd NB	44.2
Rosemead Blvd SB	43.9
Rush St EB	27.8
Rush St WB	22.9
San Gabriel Blvd NB	29.9
San Gabriel Blvd SB	30.5
Santa Anita Ave NB	37.9
Santa Anita Ave SB	38.2
Telstar Ave EB	40.2
Telstar Ave WB	38.6
Temple City Blvd NB	60.6
Temple City Blvd SB	59.5
Tyler Ave NB	32.8
Tyler Ave SB	33.9
Valley Blvd EB	44.9

Valley Blvd WB			45.1
Valley Mall NB			21.4
Valley Mall SB			19.1
Walnut Grove NB			34.1
Walnut Grove SB			33.8
Whitmore St			33.6
SE corner of Temple City at Valley	GF	65.6	
Aerojet Ave NB			23.2
Aerojet Ave SB			22.8
Baldwin Ave NB			48
Baldwin Ave SB			46
Chico Ave SB			20
Durfee Ave NB			0
Durfee Ave NB (South)			0
Durfee Ave SB (South)			0
Flair Dr EB			32.4
Flair Dr WB			32.5
Fletcher Ave NB			18.4
Fletcher Ave SB			17.9
Garvey Ave EB			36.8
Garvey Ave WB			36.7
Gilman Rd NB			0
Gilman Rd SB			0
Glendon Way EB			26
Glendon Way WB			25.2
I-10 EB			49.8
I-10 EB Ramp			21.4
I-10 EB Ramp 2			24.1
I-10 WB			49.1
I-10 WB Ramp			20.1
Las Tunas Dr EB			29.2
Las Tunas Dr WB			29
Loftus Dr EB			32.5
Loftus Dr WB			35.5
Lower Azusa Rd EB			41.6
Lower Azusa Rd WB			41.5
Merced Ave NB			8.3
Merced Ave NB			24.6
Merced Ave SB			25.9
Olive St EB			21.7
Olive St WB			21.3
Olney St WB			14.8
Peck Rd NB			32.5

Peck Rd SB			32.3
Ramona Blvd EB			29.7
Ramona Blvd WB			30.2
Rio Hondo Ave NB			19
Rio Hondo Ave SB			18.7
Roseglen St NB			0
Roseglen St NB1			0
Roseglen St SB			0
Rosemead Blvd NB			42.6
Rosemead Blvd SB			42.3
Rush St EB			24.9
Rush St WB			20
San Gabriel Blvd NB			29.4
San Gabriel Blvd SB			30
Santa Anita Ave NB			37.1
Santa Anita Ave SB			37.4
Telstar Ave EB			33.3
Telstar Ave WB			29.7
Temple City Blvd NB			60.1
Temple City Blvd SB			57.1
Tyler Ave NB			32.5
Tyler Ave SB			34.2
Valley Blvd EB			59
Valley Blvd WB			59.6
Valley Mall NB			21.1
Valley Mall SB			18.8
Walnut Grove NB			33.3
Walnut Grove SB			33
Whitmore St			29.1
South of Santa Anita at Tyler	GF	65.1	
Aerojet Ave NB			14.7
Aerojet Ave SB			14.4
Baldwin Ave NB			37.5
Baldwin Ave SB			35.9
Chico Ave SB			15.3
Durfee Ave NB			17.9
Durfee Ave NB (South)			0
Durfee Ave SB (South)			18.9
Flair Dr EB			23.1
Flair Dr WB			23.2
Fletcher Ave NB			9.3
Fletcher Ave SB			8.8
Garvey Ave EB			34.8

Garvey Ave WB	35.1
Gilman Rd NB	13.9
Gilman Rd SB	18.6
Glendon Way EB	17.5
Glendon Way WB	16.6
I-10 EB	46
I-10 EB Ramp	0
I-10 EB Ramp 2	15.9
I-10 WB	45.7
I-10 WB Ramp	9.5
Las Tunas Dr EB	0
Las Tunas Dr WB	0
Loftus Dr EB	21.3
Loftus Dr WB	24.4
Lower Azusa Rd EB	42.2
Lower Azusa Rd WB	41.7
Merced Ave NB	3.6
Merced Ave NB	21.2
Merced Ave SB	22.4
Olive St EB	20
Olive St WB	19.7
Olney St WB	3.9
Peck Rd NB	41.3
Peck Rd SB	40.7
Ramona Blvd EB	37.7
Ramona Blvd WB	38.1
Rio Hondo Ave NB	10.1
Rio Hondo Ave SB	9.8
Roseglen St NB	17.9
Roseglen St NB1	13.3
Roseglen St SB	13.3
Rosemead Blvd NB	33.7
Rosemead Blvd SB	33.1
Rush St EB	0
Rush St WB	0
San Gabriel Blvd NB	0
San Gabriel Blvd SB	0
Santa Anita Ave NB	59.4
Santa Anita Ave SB	59.3
Telstar Ave EB	25.6
Telstar Ave WB	21.7
Temple City Blvd NB	34.3
Temple City Blvd SB	32.7

Tyler Ave NB			54.9
Tyler Ave SB			60.2
Valley Blvd EB			42
Valley Blvd WB			40.9
Valley Mall NB			26.4
Valley Mall SB			24
Walnut Grove NB			0
Walnut Grove SB			0
Whitmore St			21.7
SW corner of Baldwin and Lower Azusa	GF	65.7	
Aerojet Ave NB			17.8
Aerojet Ave SB			17.5
Baldwin Ave NB			59.6
Baldwin Ave SB			59.9
Chico Ave SB			16.2
Durfee Ave NB			0
Durfee Ave NB (South)			0
Durfee Ave SB (South)			0
Flair Dr EB			25.9
Flair Dr WB			26
Fletcher Ave NB			12
Fletcher Ave SB			11.4
Garvey Ave EB			33.3
Garvey Ave WB			33.3
Gilman Rd NB			0
Gilman Rd SB			0
Glendon Way EB			21.2
Glendon Way WB			20.4
I-10 EB			44.8
I-10 EB Ramp			16.7
I-10 EB Ramp 2			19.2
I-10 WB			44.3
I-10 WB Ramp			12.6
Las Tunas Dr EB			30.3
Las Tunas Dr WB			30.1
Loftus Dr EB			24.6
Loftus Dr WB			27.6
Lower Azusa Rd EB			59.7
Lower Azusa Rd WB			58.2
Merced Ave NB			4.5
Merced Ave NB			21.1
Merced Ave SB			22.4
Olive St EB			27.8

Olive St WB			27.4
Olney St WB			7.1
Peck Rd NB			33.7
Peck Rd SB			33.4
Ramona Blvd EB			30.4
Ramona Blvd WB			30.8
Rio Hondo Ave NB			13
Rio Hondo Ave SB			12.7
Roseglen St NB			0
Roseglen St NB1			0
Roseglen St SB			0
Rosemead Blvd NB			39
Rosemead Blvd SB			38.7
Rush St EB			0
Rush St WB			0
San Gabriel Blvd NB			23.1
San Gabriel Blvd SB			23.7
Santa Anita Ave NB			37.2
Santa Anita Ave SB			37.6
Telstar Ave EB			28.1
Telstar Ave WB			24.2
Temple City Blvd NB			44.8
Temple City Blvd SB			42.5
Tyler Ave NB			33.8
Tyler Ave SB			36.1
Valley Blvd EB			40.7
Valley Blvd WB			40.8
Valley Mall NB			20.8
Valley Mall SB			18.4
Walnut Grove NB			28.9
Walnut Grove SB			28.7
Whitmore St			24
SW corner of Durfee and Ramona	GF	62.7	
Aerojet Ave NB			0
Aerojet Ave SB			0
Baldwin Ave NB			0
Baldwin Ave SB			0
Chico Ave SB			0
Durfee Ave NB			27.3
Durfee Ave NB (South)			0
Durfee Ave SB (South)			48.6
Flair Dr EB			0
Flair Dr WB			0

Fletcher Ave NB	0
Fletcher Ave SB	0
Garvey Ave EB	33.5
Garvey Ave WB	33.9
Gilman Rd NB	32.4
Gilman Rd SB	37.2
Glendon Way EB	0
Glendon Way WB	0
I-10 EB	44.8
I-10 EB Ramp	0
I-10 EB Ramp 2	0
I-10 WB	45.2
I-10 WB Ramp	0
Las Tunas Dr EB	0
Las Tunas Dr WB	0
Loftus Dr EB	0
Loftus Dr WB	0
Lower Azusa Rd EB	37.5
Lower Azusa Rd WB	37.3
Merced Ave NB	0
Merced Ave NB	0
Merced Ave SB	0
Olive St EB	0
Olive St WB	0
Olney St WB	0
Peck Rd NB	40.2
Peck Rd SB	39.5
Ramona Blvd EB	59.8
Ramona Blvd WB	58.6
Rio Hondo Ave NB	0
Rio Hondo Ave SB	0
Roseglen St NB	22.9
Roseglen St NB1	22.8
Roseglen St SB	18.3
Rosemead Blvd NB	0
Rosemead Blvd SB	0
Rush St EB	0
Rush St WB	0
San Gabriel Blvd NB	0
San Gabriel Blvd SB	0
Santa Anita Ave NB	32.4
Santa Anita Ave SB	32.8
Telstar Ave EB	0

Telstar Ave WB			0
Temple City Blvd NB			0
Temple City Blvd SB			0
Tyler Ave NB			32.2
Tyler Ave SB			34.1
Valley Blvd EB			36.1
Valley Blvd WB			35.3
Valley Mall NB			17.4
Valley Mall SB			15.1
Walnut Grove NB			0
Walnut Grove SB			0
Whitmore St			0
SW corner of Fletcher and Flair	GF	73.3	
Aerojet Ave NB			30.6
Aerojet Ave SB			30.2
Baldwin Ave NB			43
Baldwin Ave SB			42.2
Chico Ave SB			26.6
Durfee Ave NB			0
Durfee Ave NB (South)			0
Durfee Ave SB (South)			0
Flair Dr EB			58.6
Flair Dr WB			56.5
Fletcher Ave NB			49.7
Fletcher Ave SB			49.9
Garvey Ave EB			42
Garvey Ave WB			41.9
Gilman Rd NB			0
Gilman Rd SB			0
Glendon Way EB			29.7
Glendon Way WB			28.9
I-10 EB			70.8
I-10 EB Ramp			25.9
I-10 EB Ramp 2			29
I-10 WB			68.8
I-10 WB Ramp			38.7
Las Tunas Dr EB			26.5
Las Tunas Dr WB			26.3
Loftus Dr EB			37.2
Loftus Dr WB			39.9
Lower Azusa Rd EB			35.5
Lower Azusa Rd WB			35.2
Merced Ave NB			15

Merced Ave NB			29.7
Merced Ave SB			31
Olive St EB			17.3
Olive St WB			16.9
Olney St WB			32
Peck Rd NB			31.5
Peck Rd SB			31.5
Ramona Blvd EB			29.6
Ramona Blvd WB			29.6
Rio Hondo Ave NB			32.6
Rio Hondo Ave SB			32.1
Roseglen St NB			0
Roseglen St NB1			0
Roseglen St SB			0
Rosemead Blvd NB			46.5
Rosemead Blvd SB			46.1
Rush St EB			29.2
Rush St WB			24.3
San Gabriel Blvd NB			30.6
San Gabriel Blvd SB			31.2
Santa Anita Ave NB			36.9
Santa Anita Ave SB			37.3
Telstar Ave EB			44.6
Telstar Ave WB			43.6
Temple City Blvd NB			47
Temple City Blvd SB			47.9
Tyler Ave NB			32
Tyler Ave SB			33
Valley Blvd EB			42.4
Valley Blvd WB			42.7
Valley Mall NB			20.2
Valley Mall SB			17.9
Walnut Grove NB			35.3
Walnut Grove SB			34.9
Whitmore St			37.2
SW corner of Gilman and Ramona	GF	63.5	
Aerojet Ave NB			0
Aerojet Ave SB			0
Baldwin Ave NB			0
Baldwin Ave SB			0
Chico Ave SB			0
Durfee Ave NB			29.7
Durfee Ave NB (South)			0

Durfee Ave SB (South)	36.7
Flair Dr EB	0
Flair Dr WB	0
Fletcher Ave NB	0
Fletcher Ave SB	0
Garvey Ave EB	31.4
Garvey Ave WB	31.8
Gilman Rd NB	45.9
Gilman Rd SB	51.3
Glendon Way EB	0
Glendon Way WB	0
I-10 EB	42.4
I-10 EB Ramp	0
I-10 EB Ramp 2	0
I-10 WB	42.8
I-10 WB Ramp	0
Las Tunas Dr EB	0
Las Tunas Dr WB	0
Loftus Dr EB	0
Loftus Dr WB	0
Lower Azusa Rd EB	37.4
Lower Azusa Rd WB	37.2
Merced Ave NB	0
Merced Ave NB	0
Merced Ave SB	0
Olive St EB	0
Olive St WB	0
Olney St WB	0
Peck Rd NB	38.1
Peck Rd SB	37.5
Ramona Blvd EB	60.8
Ramona Blvd WB	59.1
Rio Hondo Ave NB	0
Rio Hondo Ave SB	0
Roseglen St NB	23.7
Roseglen St NB1	25.1
Roseglen St SB	19.1
Rosemead Blvd NB	0
Rosemead Blvd SB	0
Rush St EB	0
Rush St WB	0
San Gabriel Blvd NB	0
San Gabriel Blvd SB	0

Santa Anita Ave NB			30.6
Santa Anita Ave SB			31
Telstar Ave EB			0
Telstar Ave WB			0
Temple City Blvd NB			0
Temple City Blvd SB			0
Tyler Ave NB			30.8
Tyler Ave SB			32.6
Valley Blvd EB			34.2
Valley Blvd WB			33.2
Valley Mall NB			15.9
Valley Mall SB			13.6
Walnut Grove NB			0
Walnut Grove SB			0
Whitmore St			0
SW corner of Merced and Garvey	GF	62.3	
Aerojet Ave NB			21.6
Aerojet Ave SB			21.2
Baldwin Ave NB			36.4
Baldwin Ave SB			35.2
Chico Ave SB			29.4
Durfee Ave NB			0
Durfee Ave NB (South)			0
Durfee Ave SB (South)			0
Flair Dr EB			30.2
Flair Dr WB			30.4
Fletcher Ave NB			17.6
Fletcher Ave SB			17.1
Garvey Ave EB			56.7
Garvey Ave WB			56.3
Gilman Rd NB			0
Gilman Rd SB			0
Glendon Way EB			22.3
Glendon Way WB			21.4
I-10 EB			50.3
I-10 EB Ramp			19.1
I-10 EB Ramp 2			21.8
I-10 WB			49.6
I-10 WB Ramp			16.1
Las Tunas Dr EB			0
Las Tunas Dr WB			0
Loftus Dr EB			26
Loftus Dr WB			28.9

Lower Azusa Rd EB			31.8
Lower Azusa Rd WB			31.5
Merced Ave NB			17.9
Merced Ave NB			53.7
Merced Ave SB			53.8
Olive St EB			0
Olive St WB			0
Olney St WB			10.3
Peck Rd NB			34.8
Peck Rd SB			34.9
Ramona Blvd EB			31.9
Ramona Blvd WB			32.3
Rio Hondo Ave NB			17.7
Rio Hondo Ave SB			17.4
Roseglen St NB			0
Roseglen St NB1			0
Roseglen St SB			0
Rosemead Blvd NB			42.1
Rosemead Blvd SB			41.9
Rush St EB			32.9
Rush St WB			28
San Gabriel Blvd NB			25.1
San Gabriel Blvd SB			25.6
Santa Anita Ave NB			41.9
Santa Anita Ave SB			42.3
Telstar Ave EB			33.2
Telstar Ave WB			30
Temple City Blvd NB			34.6
Temple City Blvd SB			33.8
Tyler Ave NB			35.2
Tyler Ave SB			35.2
Valley Blvd EB			39
Valley Blvd WB			38.6
Valley Mall NB			21.4
Valley Mall SB			19.1
Walnut Grove NB			31.2
Walnut Grove SB			30.8
Whitmore St			31.3
SW corner of Peck and Garvey	GF	66.8	
Aerojet Ave NB			15.1
Aerojet Ave SB			14.8
Baldwin Ave NB			32.4
Baldwin Ave SB			30.9

Chico Ave SB	18.5
Durfee Ave NB	15
Durfee Ave NB (South)	0
Durfee Ave SB (South)	18.9
Flair Dr EB	23.2
Flair Dr WB	23.4
Fletcher Ave NB	9.9
Fletcher Ave SB	9.4
Garvey Ave EB	59.8
Garvey Ave WB	58.8
Gilman Rd NB	13.9
Gilman Rd SB	18.7
Glendon Way EB	12.7
Glendon Way WB	11.4
I-10 EB	53
I-10 EB Ramp	8.4
I-10 EB Ramp 2	16
I-10 WB	52.9
I-10 WB Ramp	9.3
Las Tunas Dr EB	0
Las Tunas Dr WB	0
Loftus Dr EB	20.5
Loftus Dr WB	23.5
Lower Azusa Rd EB	32.9
Lower Azusa Rd WB	32.6
Merced Ave NB	6.8
Merced Ave NB	25.5
Merced Ave SB	26.7
Olive St EB	0
Olive St WB	0
Olney St WB	3.6
Peck Rd NB	60.8
Peck Rd SB	61.1
Ramona Blvd EB	37.5
Ramona Blvd WB	37.8
Rio Hondo Ave NB	10.6
Rio Hondo Ave SB	10.3
Roseglen St NB	13.7
Roseglen St NB1	10.4
Roseglen St SB	9.1
Rosemead Blvd NB	34.2
Rosemead Blvd SB	34.1
Rush St EB	25.7

Rush St WB			20.7
San Gabriel Blvd NB			0
San Gabriel Blvd SB			0
Santa Anita Ave NB			40
Santa Anita Ave SB			40.3
Telstar Ave EB			26.3
Telstar Ave WB			22.4
Temple City Blvd NB			30.2
Temple City Blvd SB			29.2
Tyler Ave NB			44.7
Tyler Ave SB			43.5
Valley Blvd EB			43.8
Valley Blvd WB			42.8
Valley Mall NB			24.1
Valley Mall SB			21.9
Walnut Grove NB			0
Walnut Grove SB			0
Whitmore St			23.2
SW corner of Rio Hondo and Flair	GF	70.3	
Aerojet Ave NB			38.7
Aerojet Ave SB			38.3
Baldwin Ave NB			39.3
Baldwin Ave SB			38.1
Chico Ave SB			26.3
Durfee Ave NB			0
Durfee Ave NB (South)			0
Durfee Ave SB (South)			0
Flair Dr EB			54.3
Flair Dr WB			52.7
Fletcher Ave NB			28.9
Fletcher Ave SB			28.5
Garvey Ave EB			42.3
Garvey Ave WB			42.1
Gilman Rd NB			0
Gilman Rd SB			0
Glendon Way EB			33.4
Glendon Way WB			32.5
I-10 EB			67.6
I-10 EB Ramp			30.1
I-10 EB Ramp 2			33.9
I-10 WB			66
I-10 WB Ramp			27.3
Las Tunas Dr EB			26.6

Las Tunas Dr WB			26.4
Loftus Dr EB			31.3
Loftus Dr WB			34.1
Lower Azusa Rd EB			34.8
Lower Azusa Rd WB			34.6
Merced Ave NB			14.6
Merced Ave NB			27.5
Merced Ave SB			28.8
Olive St EB			16.8
Olive St WB			16.4
Olney St WB			20.9
Peck Rd NB			28.9
Peck Rd SB			29.2
Ramona Blvd EB			27.4
Ramona Blvd WB			27.9
Rio Hondo Ave NB			48.5
Rio Hondo Ave SB			49
Roseglen St NB			0
Roseglen St NB1			0
Roseglen St SB			0
Rosemead Blvd NB			49.7
Rosemead Blvd SB			49.4
Rush St EB			29.4
Rush St WB			24.4
San Gabriel Blvd NB			32.1
San Gabriel Blvd SB			32.7
Santa Anita Ave NB			35
Santa Anita Ave SB			35.4
Telstar Ave EB			46.6
Telstar Ave WB			43.9
Temple City Blvd NB			41.1
Temple City Blvd SB			41.2
Tyler Ave NB			29.9
Tyler Ave SB			30.8
Valley Blvd EB			41.6
Valley Blvd WB			42.1
Valley Mall NB			18.3
Valley Mall SB			16
Walnut Grove NB			37.2
Walnut Grove SB			36.8
Whitmore St			40.6
SW corner of Rosemead and Las Tunas Dr	GF	64.9	
Aerojet Ave NB			14.7

Aerojet Ave SB	14.4
Baldwin Ave NB	33.6
Baldwin Ave SB	32.3
Chico Ave SB	0
Durfee Ave NB	0
Durfee Ave NB (South)	0
Durfee Ave SB (South)	0
Flair Dr EB	20.6
Flair Dr WB	20.5
Fletcher Ave NB	6.6
Fletcher Ave SB	6.1
Garvey Ave EB	0
Garvey Ave WB	0
Gilman Rd NB	0
Gilman Rd SB	0
Glendon Way EB	19.8
Glendon Way WB	18.9
I-10 EB	38.5
I-10 EB Ramp	14.9
I-10 EB Ramp 2	17.2
I-10 WB	38
I-10 WB Ramp	6.6
Las Tunas Dr EB	57.3
Las Tunas Dr WB	56.1
Loftus Dr EB	16.9
Loftus Dr WB	19.8
Lower Azusa Rd EB	34.2
Lower Azusa Rd WB	34.1
Merced Ave NB	0
Merced Ave NB	0
Merced Ave SB	0
Olive St EB	21.4
Olive St WB	21
Olney St WB	1.1
Peck Rd NB	0
Peck Rd SB	0
Ramona Blvd EB	0
Ramona Blvd WB	0
Rio Hondo Ave NB	8.8
Rio Hondo Ave SB	8.5
Roseglen St NB	0
Roseglen St NB1	0
Roseglen St SB	0

Rosemead Blvd NB			59.8
Rosemead Blvd SB			60.7
Rush St EB			0
Rush St WB			0
San Gabriel Blvd NB			28.3
San Gabriel Blvd SB			28.9
Santa Anita Ave NB			0
Santa Anita Ave SB			0
Telstar Ave EB			24.7
Telstar Ave WB			20
Temple City Blvd NB			34
Temple City Blvd SB			32.4
Tyler Ave NB			0
Tyler Ave SB			0
Valley Blvd EB			34.1
Valley Blvd WB			34.7
Valley Mall NB			0
Valley Mall SB			0
Walnut Grove NB			29.8
Walnut Grove SB			29.8
Whitmore St			0
SW corner of Rosemead and Valley	GF	68.9	
Aerojet Ave NB			26.5
Aerojet Ave SB			26.3
Baldwin Ave NB			36
Baldwin Ave SB			34.6
Chico Ave SB			19.3
Durfee Ave NB			0
Durfee Ave NB (South)			0
Durfee Ave SB (South)			0
Flair Dr EB			30.7
Flair Dr WB			30.3
Fletcher Ave NB			15.4
Fletcher Ave SB			14.9
Garvey Ave EB			36.8
Garvey Ave WB			36.4
Gilman Rd NB			0
Gilman Rd SB			0
Glendon Way EB			35.8
Glendon Way WB			35
I-10 EB			50.5
I-10 EB Ramp			28.3
I-10 EB Ramp 2			31

I-10 WB	49.9
I-10 WB Ramp	15.3
Las Tunas Dr EB	29.9
Las Tunas Dr WB	29.7
Loftus Dr EB	24.2
Loftus Dr WB	27.1
Lower Azusa Rd EB	38.8
Lower Azusa Rd WB	38.5
Merced Ave NB	7.6
Merced Ave NB	21.5
Merced Ave SB	22.8
Olive St EB	18
Olive St WB	17.6
Olney St WB	9.8
Peck Rd NB	0
Peck Rd SB	0
Ramona Blvd EB	21.9
Ramona Blvd WB	22.5
Rio Hondo Ave NB	19.1
Rio Hondo Ave SB	18.9
Roseglen St NB	0
Roseglen St NB1	0
Roseglen St SB	0
Rosemead Blvd NB	64.4
Rosemead Blvd SB	64.8
Rush St EB	25
Rush St WB	20.1
San Gabriel Blvd NB	35.9
San Gabriel Blvd SB	36.4
Santa Anita Ave NB	31.6
Santa Anita Ave SB	32
Telstar Ave EB	35.4
Telstar Ave WB	30.1
Temple City Blvd NB	38.3
Temple City Blvd SB	37.2
Tyler Ave NB	25.5
Tyler Ave SB	27.2
Valley Blvd EB	59.8
Valley Blvd WB	58.7
Valley Mall NB	15.3
Valley Mall SB	13
Walnut Grove NB	42.1
Walnut Grove SB	41.7

Whitmore St			30.5
SW corner of Santa Anita and Garvey	GF	65.5	
Aerojet Ave NB			18.8
Aerojet Ave SB			18.5
Baldwin Ave NB			35.4
Baldwin Ave SB			34.1
Chico Ave SB			23.9
Durfee Ave NB			0
Durfee Ave NB (South)			0
Durfee Ave SB (South)			15.4
Flair Dr EB			27.6
Flair Dr WB			27.7
Fletcher Ave NB			14.4
Fletcher Ave SB			13.9
Garvey Ave EB			59.7
Garvey Ave WB			58.8
Gilman Rd NB			8
Gilman Rd SB			12.7
Glendon Way EB			20.2
Glendon Way WB			19.3
I-10 EB			52
I-10 EB Ramp			16.8
I-10 EB Ramp 2			19.4
I-10 WB			51.4
I-10 WB Ramp			13.5
Las Tunas Dr EB			0
Las Tunas Dr WB			0
Loftus Dr EB			24.2
Loftus Dr WB			27.2
Lower Azusa Rd EB			32.3
Lower Azusa Rd WB			32
Merced Ave NB			12.3
Merced Ave NB			34.4
Merced Ave SB			35.5
Olive St EB			0
Olive St WB			0
Olney St WB			7.7
Peck Rd NB			38.4
Peck Rd SB			38.6
Ramona Blvd EB			34.9
Ramona Blvd WB			35.3
Rio Hondo Ave NB			14.7
Rio Hondo Ave SB			14.4

Roseglen St NB			0
Roseglen St NB1			0
Roseglen St SB			0
Rosemead Blvd NB			38.9
Rosemead Blvd SB			38.7
Rush St EB			29.9
Rush St WB			24.9
San Gabriel Blvd NB			0
San Gabriel Blvd SB			0
Santa Anita Ave NB			58.2
Santa Anita Ave SB			58.8
Telstar Ave EB			30.2
Telstar Ave WB			26.8
Temple City Blvd NB			33.3
Temple City Blvd SB			32.4
Tyler Ave NB			40.5
Tyler Ave SB			39.8
Valley Blvd EB			40.3
Valley Blvd WB			39.6
Valley Mall NB			23.7
Valley Mall SB			21.6
Walnut Grove NB			28.5
Walnut Grove SB			28
Whitmore St			27.4
SW corner of Santa Anita and Lower Azusa	GF	64.9	
Aerojet Ave NB			0
Aerojet Ave SB			0
Baldwin Ave NB			35.8
Baldwin Ave SB			34.3
Chico Ave SB			0
Durfee Ave NB			19
Durfee Ave NB (South)			0
Durfee Ave SB (South)			18.3
Flair Dr EB			19.5
Flair Dr WB			19.9
Fletcher Ave NB			6.8
Fletcher Ave SB			6.3
Garvey Ave EB			30.9
Garvey Ave WB			31.3
Gilman Rd NB			13.6
Gilman Rd SB			18.3
Glendon Way EB			0
Glendon Way WB			0

I-10 EB	42.2
I-10 EB Ramp	0
I-10 EB Ramp 2	0
I-10 WB	42.1
I-10 WB Ramp	7
Las Tunas Dr EB	18.4
Las Tunas Dr WB	18.2
Loftus Dr EB	18.4
Loftus Dr WB	21.5
Lower Azusa Rd EB	60.8
Lower Azusa Rd WB	59.2
Merced Ave NB	0
Merced Ave NB	18.2
Merced Ave SB	19.5
Olive St EB	20.8
Olive St WB	20.5
Olney St WB	1.3
Peck Rd NB	40.7
Peck Rd SB	40.1
Ramona Blvd EB	34.5
Ramona Blvd WB	34.8
Rio Hondo Ave NB	0
Rio Hondo Ave SB	0
Roseglen St NB	19.9
Roseglen St NB1	14.4
Roseglen St SB	15.3
Rosemead Blvd NB	0
Rosemead Blvd SB	0
Rush St EB	0
Rush St WB	0
San Gabriel Blvd NB	0
San Gabriel Blvd SB	0
Santa Anita Ave NB	39.4
Santa Anita Ave SB	39.9
Telstar Ave EB	14.2
Telstar Ave WB	13.8
Temple City Blvd NB	32.5
Temple City Blvd SB	30.9
Tyler Ave NB	55.1
Tyler Ave SB	58.1
Valley Blvd EB	36.9
Valley Blvd WB	36.2
Valley Mall NB	20.4

Valley Mall SB			18
Walnut Grove NB			0
Walnut Grove SB			0
Whitmore St			0
SW corner of Telstar and Flair	GF	73.1	
Aerojet Ave NB			27.5
Aerojet Ave SB			27.1
Baldwin Ave NB			47
Baldwin Ave SB			46.5
Chico Ave SB			26.4
Durfee Ave NB			0
Durfee Ave NB (South)			0
Durfee Ave SB (South)			0
Flair Dr EB			59.1
Flair Dr WB			57.5
Fletcher Ave NB			34.2
Fletcher Ave SB			33.5
Garvey Ave EB			42
Garvey Ave WB			42
Gilman Rd NB			0
Gilman Rd SB			0
Glendon Way EB			27.7
Glendon Way WB			26.8
I-10 EB			70.3
I-10 EB Ramp			23.8
I-10 EB Ramp 2			26.7
I-10 WB			68.4
I-10 WB Ramp			38.2
Las Tunas Dr EB			25
Las Tunas Dr WB			24.9
Loftus Dr EB			40.5
Loftus Dr WB			43.1
Lower Azusa Rd EB			35.6
Lower Azusa Rd WB			35.4
Merced Ave NB			14.7
Merced Ave NB			31.5
Merced Ave SB			32.8
Olive St EB			17.5
Olive St WB			17.1
Olney St WB			30.9
Peck Rd NB			32.8
Peck Rd SB			32.8
Ramona Blvd EB			31.5

Ramona Blvd WB			31.2
Rio Hondo Ave NB			26.6
Rio Hondo Ave SB			26.2
Roseglen St NB			0
Roseglen St NB1			0
Roseglen St SB			0
Rosemead Blvd NB			44.7
Rosemead Blvd SB			44.4
Rush St EB			29
Rush St WB			24.1
San Gabriel Blvd NB			29.7
San Gabriel Blvd SB			30.3
Santa Anita Ave NB			38.4
Santa Anita Ave SB			38.8
Telstar Ave EB			55.4
Telstar Ave WB			56.6
Temple City Blvd NB			48.5
Temple City Blvd SB			48.9
Tyler Ave NB			33
Tyler Ave SB			34
Valley Blvd EB			43.1
Valley Blvd WB			43.3
Valley Mall NB			21.6
Valley Mall SB			19.3
Walnut Grove NB			34.3
Walnut Grove SB			33.9
Whitmore St			34.9
SW corner of Temple City and Lower Azusa	GF	64.2	
Aerojet Ave NB			20.1
Aerojet Ave SB			19.8
Baldwin Ave NB			43.9
Baldwin Ave SB			42.4
Chico Ave SB			17.1
Durfee Ave NB			0
Durfee Ave NB (South)			0
Durfee Ave SB (South)			0
Flair Dr EB			27.6
Flair Dr WB			27.6
Fletcher Ave NB			13.6
Fletcher Ave SB			13.1
Garvey Ave EB			34
Garvey Ave WB			33.9
Gilman Rd NB			0

Gilman Rd SB	0
Glendon Way EB	24
Glendon Way WB	23.2
I-10 EB	45.6
I-10 EB Ramp	19.2
I-10 EB Ramp 2	21.7
I-10 WB	45
I-10 WB Ramp	14.4
Las Tunas Dr EB	31.9
Las Tunas Dr WB	31.7
Loftus Dr EB	25.7
Loftus Dr WB	28.6
Lower Azusa Rd EB	57.4
Lower Azusa Rd WB	57
Merced Ave NB	5.4
Merced Ave NB	21.4
Merced Ave SB	22.6
Olive St EB	25.6
Olive St WB	25.2
Olney St WB	8.9
Peck Rd NB	31.3
Peck Rd SB	31.2
Ramona Blvd EB	27.3
Ramona Blvd WB	28.3
Rio Hondo Ave NB	15.1
Rio Hondo Ave SB	14.8
Roseglen St NB	0
Roseglen St NB1	0
Roseglen St SB	0
Rosemead Blvd NB	42.1
Rosemead Blvd SB	41.8
Rush St EB	21.6
Rush St WB	16.6
San Gabriel Blvd NB	29
San Gabriel Blvd SB	29.6
Santa Anita Ave NB	34.9
Santa Anita Ave SB	35.3
Telstar Ave EB	30
Telstar Ave WB	25.9
Temple City Blvd NB	59.2
Temple City Blvd SB	57.2
Tyler Ave NB	31.3
Tyler Ave SB	33.3

Valley Blvd EB			42.3
Valley Blvd WB			43
Valley Mall NB			18.7
Valley Mall SB			16.4
Walnut Grove NB			32.3
Walnut Grove SB			32.1
Whitmore St			25.7
SW of Peck at I-10	GF	70.8	
Aerojet Ave NB			15.3
Aerojet Ave SB			15
Baldwin Ave NB			33.9
Baldwin Ave SB			32.4
Chico Ave SB			18
Durfee Ave NB			16.1
Durfee Ave NB (South)			0
Durfee Ave SB (South)			19.9
Flair Dr EB			23.9
Flair Dr WB			24.1
Fletcher Ave NB			10.2
Fletcher Ave SB			9.7
Garvey Ave EB			46
Garvey Ave WB			46.5
Gilman Rd NB			14.7
Gilman Rd SB			19.4
Glendon Way EB			0
Glendon Way WB			0
I-10 EB			67.9
I-10 EB Ramp			13.7
I-10 EB Ramp 2			16.2
I-10 WB			66
I-10 WB Ramp			10
Las Tunas Dr EB			0
Las Tunas Dr WB			0
Loftus Dr EB			21.1
Loftus Dr WB			24.1
Lower Azusa Rd EB			34.6
Lower Azusa Rd WB			34.3
Merced Ave NB			6.3
Merced Ave NB			25.1
Merced Ave SB			26.3
Olive St EB			12
Olive St WB			11.6
Olney St WB			4.4

Peck Rd NB			57.7
Peck Rd SB			59.6
Ramona Blvd EB			41.8
Ramona Blvd WB			42.1
Rio Hondo Ave NB			10.9
Rio Hondo Ave SB			10.6
Roseglen St NB			14.9
Roseglen St NB1			11.5
Roseglen St SB			10.3
Rosemead Blvd NB			34.1
Rosemead Blvd SB			34
Rush St EB			24.8
Rush St WB			19.8
San Gabriel Blvd NB			0
San Gabriel Blvd SB			0
Santa Anita Ave NB			41
Santa Anita Ave SB			41.3
Telstar Ave EB			26.5
Telstar Ave WB			22.7
Temple City Blvd NB			31.6
Temple City Blvd SB			30.5
Tyler Ave NB			44.6
Tyler Ave SB			43.2
Valley Blvd EB			50.1
Valley Blvd WB			49
Valley Mall NB			28.4
Valley Mall SB			26.2
Walnut Grove NB			0
Walnut Grove SB			0
Whitmore St			23.2
SW of Santa Anita at I-10	GF	69.6	
Aerojet Ave NB			19.5
Aerojet Ave SB			19.1
Baldwin Ave NB			38.4
Baldwin Ave SB			37.1
Chico Ave SB			22.8
Durfee Ave NB			0
Durfee Ave NB (South)			0
Durfee Ave SB (South)			15.9
Flair Dr EB			29.4
Flair Dr WB			29.7
Fletcher Ave NB			15.7
Fletcher Ave SB			15.2

Garvey Ave EB	45.5
Garvey Ave WB	45.9
Gilman Rd NB	11.1
Gilman Rd SB	15.8
Glendon Way EB	20.9
Glendon Way WB	20
I-10 EB	66.2
I-10 EB Ramp	17.3
I-10 EB Ramp 2	20
I-10 WB	64.9
I-10 WB Ramp	15.3
Las Tunas Dr EB	0
Las Tunas Dr WB	0
Loftus Dr EB	27.3
Loftus Dr WB	30.4
Lower Azusa Rd EB	34.7
Lower Azusa Rd WB	34.4
Merced Ave NB	11.2
Merced Ave NB	33.1
Merced Ave SB	34.2
Olive St EB	16.1
Olive St WB	15.7
Olney St WB	9.6
Peck Rd NB	39.1
Peck Rd SB	39.2
Ramona Blvd EB	39.4
Ramona Blvd WB	39.8
Rio Hondo Ave NB	15.6
Rio Hondo Ave SB	15.3
Roseglen St NB	0
Roseglen St NB1	0
Roseglen St SB	0
Rosemead Blvd NB	38.9
Rosemead Blvd SB	38.7
Rush St EB	28
Rush St WB	23.1
San Gabriel Blvd NB	0
San Gabriel Blvd SB	0
Santa Anita Ave NB	58.4
Santa Anita Ave SB	59.8
Telstar Ave EB	30.9
Telstar Ave WB	27.8
Temple City Blvd NB	35.4

Temple City Blvd SB	34.5
Tyler Ave NB	41.5
Tyler Ave SB	40.7
Valley Blvd EB	43.5
Valley Blvd WB	42.8
Valley Mall NB	28.1
Valley Mall SB	25.9
Walnut Grove NB	29.5
Walnut Grove SB	29.2
Whitmore St	27.6

05360 Flair Spectrum Specific Plan
Year 2035 No Project Buildout
Road Emission Table

Stationing km	ADT Veh/24h	Traffic values Vehicles type	Vehicle name	day Veh/h	night Veh/h	Speed km/h	Control device	Constr. Speed km/h	Affect. veh. %	Road surface	Gradient Min / Max %
San Gabriel Blvd SB		Traffic direction:	In entry direction								
2+808	*43485*	*Total*	-	*2899*	-	-	*Traffic light*	*0*	-	*Average (of DGAC and PCC)*	*0*
2+808	43485	Automobiles	-	1692	-	56	Traffic light	0	-	Average (of DGAC and PCC)	0
2+808	43485	Medium trucks	-	1033	-	56	Traffic light	0	-	Average (of DGAC and PCC)	0
2+808	43485	Heavy trucks	-	136	-	56	Traffic light	0	-	Average (of DGAC and PCC)	0
2+808	43485	Buses	-	20	-	56	Traffic light	0	-	Average (of DGAC and PCC)	0
2+808	43485	Motorcycles	-	18	-	56	Traffic light	0	-	Average (of DGAC and PCC)	0
2+808	43485	Auxiliary Vehicle	-	-	-	56	Traffic light	0	-	Average (of DGAC and PCC)	0
3+411	*43485*	*Total*	-	*2899*	-	-	*Traffic light*	*0*	-	*Average (of DGAC and PCC)*	*0*
3+411	43485	Automobiles	-	1692	-	56	Traffic light	0	-	Average (of DGAC and PCC)	0
3+411	43485	Medium trucks	-	1033	-	56	Traffic light	0	-	Average (of DGAC and PCC)	0
3+411	43485	Heavy trucks	-	136	-	56	Traffic light	0	-	Average (of DGAC and PCC)	0
3+411	43485	Buses	-	20	-	56	Traffic light	0	-	Average (of DGAC and PCC)	0
3+411	43485	Motorcycles	-	18	-	56	Traffic light	0	-	Average (of DGAC and PCC)	0
3+411	43485	Auxiliary Vehicle	-	-	-	56	Traffic light	0	-	Average (of DGAC and PCC)	0
5+357	-						-	-	-	-	-
0+000	*43485*	*Total*	-	*2899*	-	-	*Traffic light*	*0*	-	*Average (of DGAC and PCC)*	*0*
0+000	43485	Automobiles	-	1692	-	56	Traffic light	0	-	Average (of DGAC and PCC)	0
0+000	43485	Medium trucks	-	1033	-	56	Traffic light	0	-	Average (of DGAC and PCC)	0
0+000	43485	Heavy trucks	-	136	-	56	Traffic light	0	-	Average (of DGAC and PCC)	0
0+000	43485	Buses	-	20	-	56	Traffic light	0	-	Average (of DGAC and PCC)	0
0+000	43485	Motorcycles	-	18	-	56	Traffic light	0	-	Average (of DGAC and PCC)	0
0+000	43485	Auxiliary Vehicle	-	-	-	56	Traffic light	0	-	Average (of DGAC and PCC)	0
San Gabriel Blvd NB		Traffic direction:	In entry direction								
2+808	*37950*	*Total*	-	*2530*	-	-	*Traffic light*	*0*	-	*Average (of DGAC and PCC)*	*0*
2+808	37950	Automobiles	-	1477	-	56	Traffic light	0	-	Average (of DGAC and PCC)	0
2+808	37950	Medium trucks	-	902	-	56	Traffic light	0	-	Average (of DGAC and PCC)	0
2+808	37950	Heavy trucks	-	118	-	56	Traffic light	0	-	Average (of DGAC and PCC)	0
2+808	37950	Buses	-	17	-	56	Traffic light	0	-	Average (of DGAC and PCC)	0
2+808	37950	Motorcycles	-	16	-	56	Traffic light	0	-	Average (of DGAC and PCC)	0
2+808	37950	Auxiliary Vehicle	-	-	-	56	Traffic light	0	-	Average (of DGAC and PCC)	0
4+792	*37950*	*Total*	-	*2530*	-	-	*Traffic light*	*0*	-	*Average (of DGAC and PCC)*	*0*
4+792	37950	Automobiles	-	1477	-	56	Traffic light	0	-	Average (of DGAC and PCC)	0
4+792	37950	Medium trucks	-	902	-	56	Traffic light	0	-	Average (of DGAC and PCC)	0
4+792	37950	Heavy trucks	-	118	-	56	Traffic light	0	-	Average (of DGAC and PCC)	0
4+792	37950	Buses	-	17	-	56	Traffic light	0	-	Average (of DGAC and PCC)	0
4+792	37950	Motorcycles	-	16	-	56	Traffic light	0	-	Average (of DGAC and PCC)	0
4+792	37950	Auxiliary Vehicle	-	-	-	56	Traffic light	0	-	Average (of DGAC and PCC)	0
5+314	-						-	-	-	-	-
0+000	*37950*	*Total*	-	*2530*	-	-	*Traffic light*	*0*	-	*Average (of DGAC and PCC)*	*0*
0+000	37950	Automobiles	-	1477	-	56	Traffic light	0	-	Average (of DGAC and PCC)	0
0+000	37950	Medium trucks	-	902	-	56	Traffic light	0	-	Average (of DGAC and PCC)	0
0+000	37950	Heavy trucks	-	118	-	56	Traffic light	0	-	Average (of DGAC and PCC)	0
0+000	37950	Buses	-	17	-	56	Traffic light	0	-	Average (of DGAC and PCC)	0
0+000	37950	Motorcycles	-	16	-	56	Traffic light	0	-	Average (of DGAC and PCC)	0
0+000	37950	Auxiliary Vehicle	-	-	-	56	Traffic light	0	-	Average (of DGAC and PCC)	0
Walnut Grove SB		Traffic direction:	In entry direction								
2+808	*32055*	*Total*	-	*2137*	-	-	*Traffic light*	*0*	-	*Average (of DGAC and PCC)*	*0*
2+808	32055	Automobiles	-	1247	-	64	Traffic light	0	-	Average (of DGAC and PCC)	0
2+808	32055	Medium trucks	-	761	-	64	Traffic light	0	-	Average (of DGAC and PCC)	0
2+808	32055	Heavy trucks	-	100	-	64	Traffic light	0	-	Average (of DGAC and PCC)	0
2+808	32055	Buses	-	15	-	64	Traffic light	0	-	Average (of DGAC and PCC)	0
2+808	32055	Motorcycles	-	14	-	64	Traffic light	0	-	Average (of DGAC and PCC)	0
2+808	32055	Auxiliary Vehicle	-	-	-	64	Traffic light	0	-	Average (of DGAC and PCC)	0
3+511	*32055*	*Total*	-	*2137*	-	-	*Traffic light*	*0*	-	*Average (of DGAC and PCC)*	*0*

3+511	32055	Automobiles	-	1247	-	64	Traffic light	0	-	Average (of DGAC and PCC)	0
3+511	32055	Medium trucks	-	761	-	64	Traffic light	0	-	Average (of DGAC and PCC)	0
3+511	32055	Heavy trucks	-	100	-	64	Traffic light	0	-	Average (of DGAC and PCC)	0
3+511	32055	Buses	-	15	-	64	Traffic light	0	-	Average (of DGAC and PCC)	0
3+511	32055	Motorcycles	-	14	-	64	Traffic light	0	-	Average (of DGAC and PCC)	0
3+511	32055	Auxiliary Vehicle	-	-	-	64	Traffic light	0	-	Average (of DGAC and PCC)	0
5+905	*31050*	*Total*	-	*2070*	-	-	*Traffic light*	*0*	-	*Average (of DGAC and PCC)*	*0*
5+905	31050	Automobiles	-	1208	-	64	Traffic light	0	-	Average (of DGAC and PCC)	0
5+905	31050	Medium trucks	-	738	-	64	Traffic light	0	-	Average (of DGAC and PCC)	0
5+905	31050	Heavy trucks	-	97	-	64	Traffic light	0	-	Average (of DGAC and PCC)	0
5+905	31050	Buses	-	14	-	64	Traffic light	0	-	Average (of DGAC and PCC)	0
5+905	31050	Motorcycles	-	13	-	64	Traffic light	0	-	Average (of DGAC and PCC)	0
5+905	31050	Auxiliary Vehicle	-	-	-	64	Traffic light	0	-	Average (of DGAC and PCC)	0
6+606	-						-	-	-	-	-
0+000	*31050*	*Total*	-	*2070*	-	-	*Traffic light*	*0*	-	*Average (of DGAC and PCC)*	*0*
0+000	31050	Automobiles	-	1208	-	64	Traffic light	0	-	Average (of DGAC and PCC)	0
0+000	31050	Medium trucks	-	738	-	64	Traffic light	0	-	Average (of DGAC and PCC)	0
0+000	31050	Heavy trucks	-	97	-	64	Traffic light	0	-	Average (of DGAC and PCC)	0
0+000	31050	Buses	-	14	-	64	Traffic light	0	-	Average (of DGAC and PCC)	0
0+000	31050	Motorcycles	-	13	-	64	Traffic light	0	-	Average (of DGAC and PCC)	0
0+000	31050	Auxiliary Vehicle	-	-	-	64	Traffic light	0	-	Average (of DGAC and PCC)	0
Walnut Grove NB	Traffic direction:	In entry direction									
2+808	*35565*	*Total*	-	*2371*	-	-	*Traffic light*	*0*	-	*Average (of DGAC and PCC)*	*0*
2+808	35565	Automobiles	-	1384	-	64	Traffic light	0	-	Average (of DGAC and PCC)	0
2+808	35565	Medium trucks	-	845	-	64	Traffic light	0	-	Average (of DGAC and PCC)	0
2+808	35565	Heavy trucks	-	111	-	64	Traffic light	0	-	Average (of DGAC and PCC)	0
2+808	35565	Buses	-	16	-	64	Traffic light	0	-	Average (of DGAC and PCC)	0
2+808	35565	Motorcycles	-	15	-	64	Traffic light	0	-	Average (of DGAC and PCC)	0
2+808	35565	Auxiliary Vehicle	-	-	-	64	Traffic light	0	-	Average (of DGAC and PCC)	0
3+507	*35565*	*Total*	-	*2371*	-	-	*Traffic light*	*0*	-	*Average (of DGAC and PCC)*	*0*
3+507	35565	Automobiles	-	1384	-	64	Traffic light	0	-	Average (of DGAC and PCC)	0
3+507	35565	Medium trucks	-	845	-	64	Traffic light	0	-	Average (of DGAC and PCC)	0
3+507	35565	Heavy trucks	-	111	-	64	Traffic light	0	-	Average (of DGAC and PCC)	0
3+507	35565	Buses	-	16	-	64	Traffic light	0	-	Average (of DGAC and PCC)	0
3+507	35565	Motorcycles	-	15	-	64	Traffic light	0	-	Average (of DGAC and PCC)	0
3+507	35565	Auxiliary Vehicle	-	-	-	64	Traffic light	0	-	Average (of DGAC and PCC)	0
5+919	*27765*	*Total*	-	*1851*	-	-	*Traffic light*	*0*	-	*Average (of DGAC and PCC)*	*0*
5+919	27765	Automobiles	-	1079	-	64	Traffic light	0	-	Average (of DGAC and PCC)	0
5+919	27765	Medium trucks	-	659	-	64	Traffic light	0	-	Average (of DGAC and PCC)	0
5+919	27765	Heavy trucks	-	87	-	64	Traffic light	0	-	Average (of DGAC and PCC)	0
5+919	27765	Buses	-	14	-	64	Traffic light	0	-	Average (of DGAC and PCC)	0
5+919	27765	Motorcycles	-	12	-	64	Traffic light	0	-	Average (of DGAC and PCC)	0
5+919	27765	Auxiliary Vehicle	-	-	-	64	Traffic light	0	-	Average (of DGAC and PCC)	0
6+589	-						-	-	-	-	-
0+000	*27750*	*Total*	-	*1850*	-	-	*Traffic light*	*0*	-	*Average (of DGAC and PCC)*	*0*
0+000	27750	Automobiles	-	1079	-	64	Traffic light	0	-	Average (of DGAC and PCC)	0
0+000	27750	Medium trucks	-	659	-	64	Traffic light	0	-	Average (of DGAC and PCC)	0
0+000	27750	Heavy trucks	-	87	-	64	Traffic light	0	-	Average (of DGAC and PCC)	0
0+000	27750	Buses	-	13	-	64	Traffic light	0	-	Average (of DGAC and PCC)	0
0+000	27750	Motorcycles	-	12	-	64	Traffic light	0	-	Average (of DGAC and PCC)	0
0+000	27750	Auxiliary Vehicle	-	-	-	64	Traffic light	0	-	Average (of DGAC and PCC)	0
Valley Blvd WB	Traffic direction:	In entry direction									
2+808	*32115*	*Total*	-	*2141*	-	-	*none*	-	-	*Average (of DGAC and PCC)*	*0*
2+808	32115	Automobiles	-	1249	-	56	none	-	-	Average (of DGAC and PCC)	0
2+808	32115	Medium trucks	-	763	-	56	none	-	-	Average (of DGAC and PCC)	0
2+808	32115	Heavy trucks	-	100	-	56	none	-	-	Average (of DGAC and PCC)	0
2+808	32115	Buses	-	15	-	56	none	-	-	Average (of DGAC and PCC)	0
2+808	32115	Motorcycles	-	14	-	56	none	-	-	Average (of DGAC and PCC)	0
2+808	32115	Auxiliary Vehicle	-	-	-	56	none	-	-	Average (of DGAC and PCC)	0
3+368	*32115*	*Total*	-	*2141*	-	-	*Traffic light*	*0*	-	*Average (of DGAC and PCC)*	*0*
3+368	32115	Automobiles	-	1249	-	56	Traffic light	0	-	Average (of DGAC and PCC)	0
3+368	32115	Medium trucks	-	763	-	56	Traffic light	0	-	Average (of DGAC and PCC)	0

3+368	32115	Heavy trucks	-		100	-		56	Traffic light		0	-	Average (of DGAC and PCC)	0
3+368	32115	Buses	-		15	-		56	Traffic light		0	-	Average (of DGAC and PCC)	0
3+368	32115	Motorcycles	-		14	-		56	Traffic light		0	-	Average (of DGAC and PCC)	0
3+368	32115	Auxiliary Vehicle	-	-	-			56	Traffic light		0	-	Average (of DGAC and PCC)	0
4+654	*36690*	*Total*	-		*2446*	-	-		*Traffic light*		*0*	-	*Average (of DGAC and PCC)*	*0*
4+654	36690	Automobiles	-		1427	-		56	Traffic light		0	-	Average (of DGAC and PCC)	0
4+654	36690	Medium trucks	-		872	-		56	Traffic light		0	-	Average (of DGAC and PCC)	0
4+654	36690	Heavy trucks	-		114	-		56	Traffic light		0	-	Average (of DGAC and PCC)	0
4+654	36690	Buses	-		17	-		56	Traffic light		0	-	Average (of DGAC and PCC)	0
4+654	36690	Motorcycles	-		16	-		56	Traffic light		0	-	Average (of DGAC and PCC)	0
4+654	36690	Auxiliary Vehicle	-	-	-			56	Traffic light		0	-	Average (of DGAC and PCC)	0
5+206	*36690*	*Total*	-		*2446*	-	-		*none*	-		-	*Average (of DGAC and PCC)*	*0*
5+206	36690	Automobiles	-		1427	-		56	none	-		-	Average (of DGAC and PCC)	0
5+206	36690	Medium trucks	-		872	-		56	none	-		-	Average (of DGAC and PCC)	0
5+206	36690	Heavy trucks	-		114	-		56	none	-		-	Average (of DGAC and PCC)	0
5+206	36690	Buses	-		17	-		56	none	-		-	Average (of DGAC and PCC)	0
5+206	36690	Motorcycles	-		16	-		56	none	-		-	Average (of DGAC and PCC)	0
5+206	36690	Auxiliary Vehicle	-	-	-			56	none	-		-	Average (of DGAC and PCC)	0
5+358	*29820*	*Total*	-		*1988*	-	-		*Traffic light*		*0*	-	*Average (of DGAC and PCC)*	*0*
5+358	29820	Automobiles	-		1160	-		56	Traffic light		0	-	Average (of DGAC and PCC)	0
5+358	29820	Medium trucks	-		708	-		56	Traffic light		0	-	Average (of DGAC and PCC)	0
5+358	29820	Heavy trucks	-		93	-		56	Traffic light		0	-	Average (of DGAC and PCC)	0
5+358	29820	Buses	-		14	-		56	Traffic light		0	-	Average (of DGAC and PCC)	0
5+358	29820	Motorcycles	-		13	-		56	Traffic light		0	-	Average (of DGAC and PCC)	0
5+358	29820	Auxiliary Vehicle	-	-	-			56	Traffic light		0	-	Average (of DGAC and PCC)	0
5+436	*29820*	*Total*	-		*1988*	-	-		*none*	-		-	*Average (of DGAC and PCC)*	*0*
5+436	29820	Automobiles	-		1160	-		56	none	-		-	Average (of DGAC and PCC)	0
5+436	29820	Medium trucks	-		708	-		56	none	-		-	Average (of DGAC and PCC)	0
5+436	29820	Heavy trucks	-		93	-		56	none	-		-	Average (of DGAC and PCC)	0
5+436	29820	Buses	-		14	-		56	none	-		-	Average (of DGAC and PCC)	0
5+436	29820	Motorcycles	-		13	-		56	none	-		-	Average (of DGAC and PCC)	0
5+436	29820	Auxiliary Vehicle	-	-	-			56	none	-		-	Average (of DGAC and PCC)	0
5+512	*29820*	*Total*	-		*1988*	-	-		*none*	-		-	*Average (of DGAC and PCC)*	*0*
5+512	29820	Automobiles	-		1160	-		56	none	-		-	Average (of DGAC and PCC)	0
5+512	29820	Medium trucks	-		708	-		56	none	-		-	Average (of DGAC and PCC)	0
5+512	29820	Heavy trucks	-		93	-		56	none	-		-	Average (of DGAC and PCC)	0
5+512	29820	Buses	-		14	-		56	none	-		-	Average (of DGAC and PCC)	0
5+512	29820	Motorcycles	-		13	-		56	none	-		-	Average (of DGAC and PCC)	0
5+512	29820	Auxiliary Vehicle	-	-	-			56	none	-		-	Average (of DGAC and PCC)	0
5+651	*29820*	*Total*	-		*1988*	-	-		*none*	-		-	*Average (of DGAC and PCC)*	*0*
5+651	29820	Automobiles	-		1160	-		56	none	-		-	Average (of DGAC and PCC)	0
5+651	29820	Medium trucks	-		708	-		56	none	-		-	Average (of DGAC and PCC)	0
5+651	29820	Heavy trucks	-		93	-		56	none	-		-	Average (of DGAC and PCC)	0
5+651	29820	Buses	-		14	-		56	none	-		-	Average (of DGAC and PCC)	0
5+651	29820	Motorcycles	-		13	-		56	none	-		-	Average (of DGAC and PCC)	0
5+651	29820	Auxiliary Vehicle	-	-	-			56	none	-		-	Average (of DGAC and PCC)	0
5+812	*33615*	*Total*	-		*2241*	-	-		*Traffic light*		*0*	-	*Average (of DGAC and PCC)*	*0*
5+812	33615	Automobiles	-		1308	-		56	Traffic light		0	-	Average (of DGAC and PCC)	0
5+812	33615	Medium trucks	-		799	-		56	Traffic light		0	-	Average (of DGAC and PCC)	0
5+812	33615	Heavy trucks	-		105	-		56	Traffic light		0	-	Average (of DGAC and PCC)	0
5+812	33615	Buses	-		15	-		56	Traffic light		0	-	Average (of DGAC and PCC)	0
5+812	33615	Motorcycles	-		14	-		56	Traffic light		0	-	Average (of DGAC and PCC)	0
5+812	33615	Auxiliary Vehicle	-	-	-			56	Traffic light		0	-	Average (of DGAC and PCC)	0
6+392	*33615*	*Total*	-		*2241*	-	-		*none*	-		-	*Average (of DGAC and PCC)*	*0*
6+392	33615	Automobiles	-		1308	-		56	none	-		-	Average (of DGAC and PCC)	0
6+392	33615	Medium trucks	-		799	-		56	none	-		-	Average (of DGAC and PCC)	0
6+392	33615	Heavy trucks	-		105	-		56	none	-		-	Average (of DGAC and PCC)	0
6+392	33615	Buses	-		15	-		56	none	-		-	Average (of DGAC and PCC)	0
6+392	33615	Motorcycles	-		14	-		56	none	-		-	Average (of DGAC and PCC)	0
6+392	33615	Auxiliary Vehicle	-	-	-			56	none	-		-	Average (of DGAC and PCC)	0
6+509	*29475*	*Total*	-		*1965*	-	-		*Traffic light*		*0*	-	*Average (of DGAC and PCC)*	*0*
6+509	29475	Automobiles	-		1781	-		56	Traffic light		0	-	Average (of DGAC and PCC)	0

6+509	29475	Medium trucks	-	1	-		56	Traffic light	0	-	Average (of DGAC and PCC)		0
6+509	29475	Heavy trucks	-	143	-		56	Traffic light	0	-	Average (of DGAC and PCC)		0
6+509	29475	Buses	-	21	-		56	Traffic light	0	-	Average (of DGAC and PCC)		0
6+509	29475	Motorcycles	-	19	-		56	Traffic light	0	-	Average (of DGAC and PCC)		0
6+509	29475	Auxiliary Vehicle	-	-	-		56	Traffic light	0	-	Average (of DGAC and PCC)		0
6+641	*45765*	*Total*	-	*3051*	-	-	*none*	-	-		*Average (of DGAC and PCC)*		*0*
6+641	45765	Automobiles	-	1781	-		56	none	-	-	Average (of DGAC and PCC)		0
6+641	45765	Medium trucks	-	1087	-		56	none	-	-	Average (of DGAC and PCC)		0
6+641	45765	Heavy trucks	-	143	-		56	none	-	-	Average (of DGAC and PCC)		0
6+641	45765	Buses	-	21	-		56	none	-	-	Average (of DGAC and PCC)		0
6+641	45765	Motorcycles	-	19	-		56	none	-	-	Average (of DGAC and PCC)		0
6+641	45765	Auxiliary Vehicle	-	-	-		56	none	-	-	Average (of DGAC and PCC)		0
8+001	*39075*	*Total*	-	*2605*	-	-	*Traffic light*		*0*	-	*Average (of DGAC and PCC)*		*0*
8+001	39075	Automobiles	-	1520	-		56	Traffic light	0	-	Average (of DGAC and PCC)		0
8+001	39075	Medium trucks	-	928	-		56	Traffic light	0	-	Average (of DGAC and PCC)		0
8+001	39075	Heavy trucks	-	122	-		56	Traffic light	0	-	Average (of DGAC and PCC)		0
8+001	39075	Buses	-	18	-		56	Traffic light	0	-	Average (of DGAC and PCC)		0
8+001	39075	Motorcycles	-	17	-		56	Traffic light	0	-	Average (of DGAC and PCC)		0
8+001	39075	Auxiliary Vehicle	-	-	-		56	Traffic light	0	-	Average (of DGAC and PCC)		0
8+681	*42240*	*Total*	-	*2816*	-	-	*Traffic light*		*0*	-	*Average (of DGAC and PCC)*		*0*
8+681	42240	Automobiles	-	1643	-		56	Traffic light	0	-	Average (of DGAC and PCC)		0
8+681	42240	Medium trucks	-	1004	-		56	Traffic light	0	-	Average (of DGAC and PCC)		0
8+681	42240	Heavy trucks	-	132	-		56	Traffic light	0	-	Average (of DGAC and PCC)		0
8+681	42240	Buses	-	19	-		56	Traffic light	0	-	Average (of DGAC and PCC)		0
8+681	42240	Motorcycles	-	18	-		56	Traffic light	0	-	Average (of DGAC and PCC)		0
8+681	42240	Auxiliary Vehicle	-	-	-		56	Traffic light	0	-	Average (of DGAC and PCC)		0
10+386	*36195*	*Total*	-	*2413*	-	-	*Traffic light*		*0*	-	*Average (of DGAC and PCC)*		*0*
10+386	36195	Automobiles	-	1409	-		56	Traffic light	0	-	Average (of DGAC and PCC)		0
10+386	36195	Medium trucks	-	860	-		56	Traffic light	0	-	Average (of DGAC and PCC)		0
10+386	36195	Heavy trucks	-	113	-		56	Traffic light	0	-	Average (of DGAC and PCC)		0
10+386	36195	Buses	-	16	-		56	Traffic light	0	-	Average (of DGAC and PCC)		0
10+386	36195	Motorcycles	-	15	-		56	Traffic light	0	-	Average (of DGAC and PCC)		0
10+386	36195	Auxiliary Vehicle	-	-	-		56	Traffic light	0	-	Average (of DGAC and PCC)		0
11+398	*43470*	*Total*	-	*2898*	-	-	*Traffic light*		*0*	-	*Average (of DGAC and PCC)*		*0*
11+398	43470	Automobiles	-	1691	-		56	Traffic light	0	-	Average (of DGAC and PCC)		0
11+398	43470	Medium trucks	-	1033	-		56	Traffic light	0	-	Average (of DGAC and PCC)		0
11+398	43470	Heavy trucks	-	136	-		56	Traffic light	0	-	Average (of DGAC and PCC)		0
11+398	43470	Buses	-	20	-		56	Traffic light	0	-	Average (of DGAC and PCC)		0
11+398	43470	Motorcycles	-	18	-		56	Traffic light	0	-	Average (of DGAC and PCC)		0
11+398	43470	Auxiliary Vehicle	-	-	-		56	Traffic light	0	-	Average (of DGAC and PCC)		0
12+369	*50070*	*Total*	-	*3338*	-	-	*Traffic light*		*0*	-	*Average (of DGAC and PCC)*		*0*
12+369	50070	Automobiles	-	1949	-		56	Traffic light	0	-	Average (of DGAC and PCC)		0
12+369	50070	Medium trucks	-	1190	-		56	Traffic light	0	-	Average (of DGAC and PCC)		0
12+369	50070	Heavy trucks	-	156	-		56	Traffic light	0	-	Average (of DGAC and PCC)		0
12+369	50070	Buses	-	22	-		56	Traffic light	0	-	Average (of DGAC and PCC)		0
12+369	50070	Motorcycles	-	21	-		56	Traffic light	0	-	Average (of DGAC and PCC)		0
12+369	50070	Auxiliary Vehicle	-	-	-		56	Traffic light	0	-	Average (of DGAC and PCC)		0
12+792	-						-	-	-		-	-	
0+000	*50070*	*Total*	-	*3338*	-	-	*none*	-	-		*Average (of DGAC and PCC)*		*0*
0+000	50070	Automobiles	-	1949	-		56	none	-	-	Average (of DGAC and PCC)		0
0+000	50070	Medium trucks	-	1190	-		56	none	-	-	Average (of DGAC and PCC)		0
0+000	50070	Heavy trucks	-	156	-		56	none	-	-	Average (of DGAC and PCC)		0
0+000	50070	Buses	-	22	-		56	none	-	-	Average (of DGAC and PCC)		0
0+000	50070	Motorcycles	-	21	-		56	none	-	-	Average (of DGAC and PCC)		0
0+000	50070	Auxiliary Vehicle	-	-	-		56	none	-	-	Average (of DGAC and PCC)		0
Rosemead Blvd SB	Traffic direction:	In entry direction											
2+808	*51120*	*Total*	-	*3408*	-	-	*none*	-	-		*Average (of DGAC and PCC)*		*0*
2+808	51120	Automobiles	-	1990	-		64	none	-	-	Average (of DGAC and PCC)		0
2+808	51120	Medium trucks	-	1215	-		64	none	-	-	Average (of DGAC and PCC)		0
2+808	51120	Heavy trucks	-	159	-		64	none	-	-	Average (of DGAC and PCC)		0
2+808	51120	Buses	-	23	-		64	none	-	-	Average (of DGAC and PCC)		0
2+808	51120	Motorcycles	-	21	-		64	none	-	-	Average (of DGAC and PCC)		0

2+808	51120	Auxiliary Vehicle	-	-	-		64	none	-	-	Average (of DGAC and PCC)		0
3+287	*51120*	*Total*	-		*3408*	-	-	*Traffic light*		*0*	-	*Average (of DGAC and PCC)*	*0*
3+287	51120	Automobiles	-		1990	-		64	Traffic light	0	-	Average (of DGAC and PCC)	0
3+287	51120	Medium trucks	-		1215	-		64	Traffic light	0	-	Average (of DGAC and PCC)	0
3+287	51120	Heavy trucks	-		159	-		64	Traffic light	0	-	Average (of DGAC and PCC)	0
3+287	51120	Buses	-		23	-		64	Traffic light	0	-	Average (of DGAC and PCC)	0
3+287	51120	Motorcycles	-		21	-		64	Traffic light	0	-	Average (of DGAC and PCC)	0
3+287	51120	Auxiliary Vehicle	-	-	-			64	Traffic light	0	-	Average (of DGAC and PCC)	0
5+711	*59970*	*Total*	-		*3998*	-	-	*Traffic light*		*0*	-	*Average (of DGAC and PCC)*	*0*
5+711	59970	Automobiles	-		2334	-		64	Traffic light	0	-	Average (of DGAC and PCC)	0
5+711	59970	Medium trucks	-		1425	-		64	Traffic light	0	-	Average (of DGAC and PCC)	0
5+711	59970	Heavy trucks	-		187	-		64	Traffic light	0	-	Average (of DGAC and PCC)	0
5+711	59970	Buses	-		27	-		64	Traffic light	0	-	Average (of DGAC and PCC)	0
5+711	59970	Motorcycles	-		25	-		64	Traffic light	0	-	Average (of DGAC and PCC)	0
5+711	59970	Auxiliary Vehicle	-	-	-			64	Traffic light	0	-	Average (of DGAC and PCC)	0
6+547	*54720*	*Total*	-		*3648*	-	-	*Traffic light*		*0*	-	*Average (of DGAC and PCC)*	*0*
6+547	54720	Automobiles	-		2129	-		64	Traffic light	0	-	Average (of DGAC and PCC)	0
6+547	54720	Medium trucks	-		1300	-		64	Traffic light	0	-	Average (of DGAC and PCC)	0
6+547	54720	Heavy trucks	-		171	-		64	Traffic light	0	-	Average (of DGAC and PCC)	0
6+547	54720	Buses	-		25	-		64	Traffic light	0	-	Average (of DGAC and PCC)	0
6+547	54720	Motorcycles	-		23	-		64	Traffic light	0	-	Average (of DGAC and PCC)	0
6+547	54720	Auxiliary Vehicle	-	-	-			64	Traffic light	0	-	Average (of DGAC and PCC)	0
7+477	*74265*	*Total*	-		*4951*	-	-	*Traffic light*		*0*	-	*Average (of DGAC and PCC)*	*0*
7+477	74265	Automobiles	-		2891	-		64	Traffic light	0	-	Average (of DGAC and PCC)	0
7+477	74265	Medium trucks	-		1765	-		64	Traffic light	0	-	Average (of DGAC and PCC)	0
7+477	74265	Heavy trucks	-		231	-		64	Traffic light	0	-	Average (of DGAC and PCC)	0
7+477	74265	Buses	-		33	-		64	Traffic light	0	-	Average (of DGAC and PCC)	0
7+477	74265	Motorcycles	-		31	-		64	Traffic light	0	-	Average (of DGAC and PCC)	0
7+477	74265	Auxiliary Vehicle	-	-	-			64	Traffic light	0	-	Average (of DGAC and PCC)	0
7+811	*74265*	*Total*	-		*4951*	-	-	*Traffic light*		*0*	-	*Average (of DGAC and PCC)*	*0*
7+811	74265	Automobiles	-		2891	-		64	Traffic light	0	-	Average (of DGAC and PCC)	0
7+811	74265	Medium trucks	-		1765	-		64	Traffic light	0	-	Average (of DGAC and PCC)	0
7+811	74265	Heavy trucks	-		231	-		64	Traffic light	0	-	Average (of DGAC and PCC)	0
7+811	74265	Buses	-		33	-		64	Traffic light	0	-	Average (of DGAC and PCC)	0
7+811	74265	Motorcycles	-		31	-		64	Traffic light	0	-	Average (of DGAC and PCC)	0
7+811	74265	Auxiliary Vehicle	-	-	-			64	Traffic light	0	-	Average (of DGAC and PCC)	0
7+919	*74265*	*Total*	-		*4951*	-	-	*Traffic light*		*0*	-	*Average (of DGAC and PCC)*	*0*
7+919	74265	Automobiles	-		2891	-		72	Traffic light	0	-	Average (of DGAC and PCC)	0
7+919	74265	Medium trucks	-		1765	-		72	Traffic light	0	-	Average (of DGAC and PCC)	0
7+919	74265	Heavy trucks	-		231	-		72	Traffic light	0	-	Average (of DGAC and PCC)	0
7+919	74265	Buses	-		33	-		72	Traffic light	0	-	Average (of DGAC and PCC)	0
7+919	74265	Motorcycles	-		31	-		72	Traffic light	0	-	Average (of DGAC and PCC)	0
7+919	74265	Auxiliary Vehicle	-	-	-			72	Traffic light	0	-	Average (of DGAC and PCC)	0
8+050	*78795*	*Total*	-		*5253*	-	-	*none*	-	-	*Average (of DGAC and PCC)*	*0*
8+050	78795	Automobiles	-		3067	-		72	none	-	-	Average (of DGAC and PCC)	0
8+050	78795	Medium trucks	-		1873	-		72	none	-	-	Average (of DGAC and PCC)	0
8+050	78795	Heavy trucks	-		245	-		72	none	-	-	Average (of DGAC and PCC)	0
8+050	78795	Buses	-		35	-		72	none	-	-	Average (of DGAC and PCC)	0
8+050	78795	Motorcycles	-		33	-		72	none	-	-	Average (of DGAC and PCC)	0
8+050	78795	Auxiliary Vehicle	-	-	-			72	none	-	-	Average (of DGAC and PCC)	0
8+350	*79710*	*Total*	-		*5314*	-	-	*Traffic light*		*0*	-	*Average (of DGAC and PCC)*	*0*
8+350	79710	Automobiles	-		3103	-		72	Traffic light	0	-	Average (of DGAC and PCC)	0
8+350	79710	Medium trucks	-		1895	-		72	Traffic light	0	-	Average (of DGAC and PCC)	0
8+350	79710	Heavy trucks	-		248	-		72	Traffic light	0	-	Average (of DGAC and PCC)	0
8+350	79710	Buses	-		35	-		72	Traffic light	0	-	Average (of DGAC and PCC)	0
8+350	79710	Motorcycles	-		33	-		72	Traffic light	0	-	Average (of DGAC and PCC)	0
8+350	79710	Auxiliary Vehicle	-	-	-			72	Traffic light	0	-	Average (of DGAC and PCC)	0
8+819	*74805*	*Total*	-		*4987*	-	-	*Traffic light*		*0*	-	*Average (of DGAC and PCC)*	*0*
8+819	74805	Automobiles	-		2912	-		72	Traffic light	0	-	Average (of DGAC and PCC)	0
8+819	74805	Medium trucks	-		1778	-		72	Traffic light	0	-	Average (of DGAC and PCC)	0
8+819	74805	Heavy trucks	-		233	-		72	Traffic light	0	-	Average (of DGAC and PCC)	0
8+819	74805	Buses	-		33	-		72	Traffic light	0	-	Average (of DGAC and PCC)	0

8+819	74805	Motorcycles	-		31	-		72	Traffic light	0	-	Average (of DGAC and PCC)	0
8+819	74805	Auxiliary Vehicle	-	-	-			72	Traffic light	0	-	Average (of DGAC and PCC)	0
9+167	*74805*	*Total*	-		*4987*	-	-		*Traffic light*	*0*	-	*Average (of DGAC and PCC)*	*0*
9+167	74805	Automobiles	-		2912	-		72	Traffic light	0	-	Average (of DGAC and PCC)	0
9+167	74805	Medium trucks	-		1778	-		72	Traffic light	0	-	Average (of DGAC and PCC)	0
9+167	74805	Heavy trucks	-		233	-		72	Traffic light	0	-	Average (of DGAC and PCC)	0
9+167	74805	Buses	-		33	-		72	Traffic light	0	-	Average (of DGAC and PCC)	0
9+167	74805	Motorcycles	-		31	-		72	Traffic light	0	-	Average (of DGAC and PCC)	0
9+167	74805	Auxiliary Vehicle	-	-	-			72	Traffic light	0	-	Average (of DGAC and PCC)	0
9+309	*64905*	*Total*	-		*4327*	-	-		*Traffic light*	*0*	-	*Average (of DGAC and PCC)*	*0*
9+309	64905	Automobiles	-		2526	-		64	Traffic light	0	-	Average (of DGAC and PCC)	0
9+309	64905	Medium trucks	-		1543	-		64	Traffic light	0	-	Average (of DGAC and PCC)	0
9+309	64905	Heavy trucks	-		202	-		64	Traffic light	0	-	Average (of DGAC and PCC)	0
9+309	64905	Buses	-		29	-		64	Traffic light	0	-	Average (of DGAC and PCC)	0
9+309	64905	Motorcycles	-		27	-		64	Traffic light	0	-	Average (of DGAC and PCC)	0
9+309	64905	Auxiliary Vehicle	-	-	-			64	Traffic light	0	-	Average (of DGAC and PCC)	0
9+623	*64905*	*Total*	-		*4327*	-	-		*Traffic light*	*0*	-	*Average (of DGAC and PCC)*	*0*
9+623	64905	Automobiles	-		2526	-		64	Traffic light	0	-	Average (of DGAC and PCC)	0
9+623	64905	Medium trucks	-		1543	-		64	Traffic light	0	-	Average (of DGAC and PCC)	0
9+623	64905	Heavy trucks	-		202	-		64	Traffic light	0	-	Average (of DGAC and PCC)	0
9+623	64905	Buses	-		29	-		64	Traffic light	0	-	Average (of DGAC and PCC)	0
9+623	64905	Motorcycles	-		27	-		64	Traffic light	0	-	Average (of DGAC and PCC)	0
9+623	64905	Auxiliary Vehicle	-	-	-			64	Traffic light	0	-	Average (of DGAC and PCC)	0
9+692	*64905*	*Total*	-		*4327*	-	-		*Traffic light*	*0*	-	*Average (of DGAC and PCC)*	*0*
9+692	64905	Automobiles	-		2526	-		64	Traffic light	0	-	Average (of DGAC and PCC)	0
9+692	64905	Medium trucks	-		1543	-		64	Traffic light	0	-	Average (of DGAC and PCC)	0
9+692	64905	Heavy trucks	-		202	-		64	Traffic light	0	-	Average (of DGAC and PCC)	0
9+692	64905	Buses	-		29	-		64	Traffic light	0	-	Average (of DGAC and PCC)	0
9+692	64905	Motorcycles	-		27	-		64	Traffic light	0	-	Average (of DGAC and PCC)	0
9+692	64905	Auxiliary Vehicle	-	-	-			64	Traffic light	0	-	Average (of DGAC and PCC)	0
10+750	*66630*	*Total*	-		*4442*	-	-		*Traffic light*	*0*	-	*Average (of DGAC and PCC)*	*0*
10+750	66630	Automobiles	-		2593	-		64	Traffic light	0	-	Average (of DGAC and PCC)	0
10+750	66630	Medium trucks	-		1583	-		64	Traffic light	0	-	Average (of DGAC and PCC)	0
10+750	66630	Heavy trucks	-		208	-		64	Traffic light	0	-	Average (of DGAC and PCC)	0
10+750	66630	Buses	-		30	-		64	Traffic light	0	-	Average (of DGAC and PCC)	0
10+750	66630	Motorcycles	-		28	-		64	Traffic light	0	-	Average (of DGAC and PCC)	0
10+750	66630	Auxiliary Vehicle	-	-	-			64	Traffic light	0	-	Average (of DGAC and PCC)	0
11+048	-							-		-	-	-	-
0+000	*66630*	*Total*	-		*4442*	-	-		*Traffic light*	*0*	-	*Average (of DGAC and PCC)*	*0*
0+000	66630	Automobiles	-		2593	-		64	Traffic light	0	-	Average (of DGAC and PCC)	0
0+000	66630	Medium trucks	-		1583	-		64	Traffic light	0	-	Average (of DGAC and PCC)	0
0+000	66630	Heavy trucks	-		208	-		64	Traffic light	0	-	Average (of DGAC and PCC)	0
0+000	66630	Buses	-		30	-		64	Traffic light	0	-	Average (of DGAC and PCC)	0
0+000	66630	Motorcycles	-		28	-		64	Traffic light	0	-	Average (of DGAC and PCC)	0
0+000	66630	Auxiliary Vehicle	-	-	-			64	Traffic light	0	-	Average (of DGAC and PCC)	0
Rosemead Blvd NB	Traffic direction:	In entry direction											
2+808	*65235*	*Total*	-		*4349*	-	-		*Traffic light*	*0*	-	*Average (of DGAC and PCC)*	*0*
2+808	65235	Automobiles	-		2539	-		64	Traffic light	0	-	Average (of DGAC and PCC)	0
2+808	65235	Medium trucks	-		1551	-		64	Traffic light	0	-	Average (of DGAC and PCC)	0
2+808	65235	Heavy trucks	-		203	-		64	Traffic light	0	-	Average (of DGAC and PCC)	0
2+808	65235	Buses	-		29	-		64	Traffic light	0	-	Average (of DGAC and PCC)	0
2+808	65235	Motorcycles	-		27	-		64	Traffic light	0	-	Average (of DGAC and PCC)	0
2+808	65235	Auxiliary Vehicle	-	-	-			64	Traffic light	0	-	Average (of DGAC and PCC)	0
4+148	*65235*	*Total*	-		*4349*	-	-		*Traffic light*	*0*	-	*Average (of DGAC and PCC)*	*0*
4+148	65235	Automobiles	-		2539	-		64	Traffic light	0	-	Average (of DGAC and PCC)	0
4+148	65235	Medium trucks	-		1551	-		64	Traffic light	0	-	Average (of DGAC and PCC)	0
4+148	65235	Heavy trucks	-		203	-		64	Traffic light	0	-	Average (of DGAC and PCC)	0
4+148	65235	Buses	-		29	-		64	Traffic light	0	-	Average (of DGAC and PCC)	0
4+148	65235	Motorcycles	-		27	-		64	Traffic light	0	-	Average (of DGAC and PCC)	0
4+148	65235	Auxiliary Vehicle	-	-	-			64	Traffic light	0	-	Average (of DGAC and PCC)	0
4+544	*75345*	*Total*	-		*5023*	-	-		*Traffic light*	*0*	-	*Average (of DGAC and PCC)*	*0*
4+544	75345	Automobiles	-		2932	-		72	Traffic light	0	-	Average (of DGAC and PCC)	0

4+544	75345	Medium trucks	-		1791	-		72	Traffic light	0	-	Average (of DGAC and PCC)	0
4+544	75345	Heavy trucks	-		235	-		72	Traffic light	0	-	Average (of DGAC and PCC)	0
4+544	75345	Buses	-		34	-		72	Traffic light	0	-	Average (of DGAC and PCC)	0
4+544	75345	Motorcycles	-		31	-		72	Traffic light	0	-	Average (of DGAC and PCC)	0
4+544	75345	Auxiliary Vehicle	-	-	-			72	Traffic light	0	-	Average (of DGAC and PCC)	0
4+663	*75330*	*Total*	-		*5022*	-	-		*Traffic light*	*0*	-	*Average (of DGAC and PCC)*	*0*
4+663	75330	Automobiles	-		2932	-		72	Traffic light	0	-	Average (of DGAC and PCC)	0
4+663	75330	Medium trucks	-		1790	-		72	Traffic light	0	-	Average (of DGAC and PCC)	0
4+663	75330	Heavy trucks	-		235	-		72	Traffic light	0	-	Average (of DGAC and PCC)	0
4+663	75330	Buses	-		34	-		72	Traffic light	0	-	Average (of DGAC and PCC)	0
4+663	75330	Motorcycles	-		31	-		72	Traffic light	0	-	Average (of DGAC and PCC)	0
4+663	75330	Auxiliary Vehicle	-	-	-			72	Traffic light	0	-	Average (of DGAC and PCC)	0
5+034	*71685*	*Total*	-		*4779*	-	-		*Traffic light*	*0*	-	*Average (of DGAC and PCC)*	*0*
5+034	71685	Automobiles	-		2790	-		72	Traffic light	0	-	Average (of DGAC and PCC)	0
5+034	71685	Medium trucks	-		1704	-		72	Traffic light	0	-	Average (of DGAC and PCC)	0
5+034	71685	Heavy trucks	-		223	-		72	Traffic light	0	-	Average (of DGAC and PCC)	0
5+034	71685	Buses	-		32	-		72	Traffic light	0	-	Average (of DGAC and PCC)	0
5+034	71685	Motorcycles	-		30	-		72	Traffic light	0	-	Average (of DGAC and PCC)	0
5+034	71685	Auxiliary Vehicle	-	-	-			72	Traffic light	0	-	Average (of DGAC and PCC)	0
5+530	*78750*	*Total*	-		*5250*	-	-		*Traffic light*	*0*	-	*Average (of DGAC and PCC)*	*0*
5+530	78750	Automobiles	-		3065	-		72	Traffic light	0	-	Average (of DGAC and PCC)	0
5+530	78750	Medium trucks	-		1872	-		72	Traffic light	0	-	Average (of DGAC and PCC)	0
5+530	78750	Heavy trucks	-		245	-		72	Traffic light	0	-	Average (of DGAC and PCC)	0
5+530	78750	Buses	-		35	-		72	Traffic light	0	-	Average (of DGAC and PCC)	0
5+530	78750	Motorcycles	-		33	-		72	Traffic light	0	-	Average (of DGAC and PCC)	0
5+530	78750	Auxiliary Vehicle	-	-	-			72	Traffic light	0	-	Average (of DGAC and PCC)	0
5+811	*78825*	*Total*	-		*5255*	-	-		*none*	-	-	*Average (of DGAC and PCC)*	*0*
5+811	78825	Automobiles	-		3068	-		72	none	-	-	Average (of DGAC and PCC)	0
5+811	78825	Medium trucks	-		1873	-		72	none	-	-	Average (of DGAC and PCC)	0
5+811	78825	Heavy trucks	-		246	-		72	none	-	-	Average (of DGAC and PCC)	0
5+811	78825	Buses	-		35	-		72	none	-	-	Average (of DGAC and PCC)	0
5+811	78825	Motorcycles	-		33	-		72	none	-	-	Average (of DGAC and PCC)	0
5+811	78825	Auxiliary Vehicle	-	-	-			72	none	-	-	Average (of DGAC and PCC)	0
5+947	*78825*	*Total*	-		*5255*	-	-		*none*	-	-	*Average (of DGAC and PCC)*	*0*
5+947	78825	Automobiles	-		3068	-		72	none	-	-	Average (of DGAC and PCC)	0
5+947	78825	Medium trucks	-		1873	-		72	none	-	-	Average (of DGAC and PCC)	0
5+947	78825	Heavy trucks	-		246	-		72	none	-	-	Average (of DGAC and PCC)	0
5+947	78825	Buses	-		35	-		72	none	-	-	Average (of DGAC and PCC)	0
5+947	78825	Motorcycles	-		33	-		72	none	-	-	Average (of DGAC and PCC)	0
5+947	78825	Auxiliary Vehicle	-	-	-			72	none	-	-	Average (of DGAC and PCC)	0
6+119	*78825*	*Total*	-		*5255*	-	-		*none*	-	-	*Average (of DGAC and PCC)*	*0*
6+119	78825	Automobiles	-		3068	-		72	none	-	-	Average (of DGAC and PCC)	0
6+119	78825	Medium trucks	-		1873	-		72	none	-	-	Average (of DGAC and PCC)	0
6+119	78825	Heavy trucks	-		246	-		72	none	-	-	Average (of DGAC and PCC)	0
6+119	78825	Buses	-		35	-		72	none	-	-	Average (of DGAC and PCC)	0
6+119	78825	Motorcycles	-		33	-		72	none	-	-	Average (of DGAC and PCC)	0
6+119	78825	Auxiliary Vehicle	-	-	-			72	none	-	-	Average (of DGAC and PCC)	0
6+377	*68655*	*Total*	-		*4577*	-	-		*Traffic light*	*0*	-	*Average (of DGAC and PCC)*	*0*
6+377	68655	Automobiles	-		2672	-		64	Traffic light	0	-	Average (of DGAC and PCC)	0
6+377	68655	Medium trucks	-		1631	-		64	Traffic light	0	-	Average (of DGAC and PCC)	0
6+377	68655	Heavy trucks	-		214	-		64	Traffic light	0	-	Average (of DGAC and PCC)	0
6+377	68655	Buses	-		31	-		64	Traffic light	0	-	Average (of DGAC and PCC)	0
6+377	68655	Motorcycles	-		29	-		64	Traffic light	0	-	Average (of DGAC and PCC)	0
6+377	68655	Auxiliary Vehicle	-	-	-			64	Traffic light	0	-	Average (of DGAC and PCC)	0
7+281	*53520*	*Total*	-		*3568*	-	-		*Traffic light*	*0*	-	*Average (of DGAC and PCC)*	*0*
7+281	53520	Automobiles	-		2083	-		64	Traffic light	0	-	Average (of DGAC and PCC)	0
7+281	53520	Medium trucks	-		1272	-		64	Traffic light	0	-	Average (of DGAC and PCC)	0
7+281	53520	Heavy trucks	-		167	-		64	Traffic light	0	-	Average (of DGAC and PCC)	0
7+281	53520	Buses	-		24	-		64	Traffic light	0	-	Average (of DGAC and PCC)	0
7+281	53520	Motorcycles	-		22	-		64	Traffic light	0	-	Average (of DGAC and PCC)	0
7+281	53520	Auxiliary Vehicle	-	-	-			64	Traffic light	0	-	Average (of DGAC and PCC)	0
8+146	*53805*	*Total*	-		*3587*	-	-		*Traffic light*	*0*	-	*Average (of DGAC and PCC)*	*0*

8+146	53805	Automobiles	-	2094	-		64	Traffic light	0	-	Average (of DGAC and PCC)	0
8+146	53805	Medium trucks	-	1278	-		64	Traffic light	0	-	Average (of DGAC and PCC)	0
8+146	53805	Heavy trucks	-	168	-		64	Traffic light	0	-	Average (of DGAC and PCC)	0
8+146	53805	Buses	-	24	-		64	Traffic light	0	-	Average (of DGAC and PCC)	0
8+146	53805	Motorcycles	-	23	-		64	Traffic light	0	-	Average (of DGAC and PCC)	0
8+146	53805	Auxiliary Vehicle	-	-	-		64	Traffic light	0	-	Average (of DGAC and PCC)	0
10+565	*50775*	*Total*	-	*3385*	-	-		*Traffic light*	*0*	-	*Average (of DGAC and PCC)*	*0*
10+565	50775	Automobiles	-	1976	-		64	Traffic light	0	-	Average (of DGAC and PCC)	0
10+565	50775	Medium trucks	-	1207	-		64	Traffic light	0	-	Average (of DGAC and PCC)	0
10+565	50775	Heavy trucks	-	158	-		64	Traffic light	0	-	Average (of DGAC and PCC)	0
10+565	50775	Buses	-	23	-		64	Traffic light	0	-	Average (of DGAC and PCC)	0
10+565	50775	Motorcycles	-	21	-		64	Traffic light	0	-	Average (of DGAC and PCC)	0
10+565	50775	Auxiliary Vehicle	-	-	-		64	Traffic light	0	-	Average (of DGAC and PCC)	0
11+040	-							-	-	-	-	-
0+000	*50775*	*Total*	-	*3385*	-	-		*Traffic light*	*0*	-	*Average (of DGAC and PCC)*	*0*
0+000	50775	Automobiles	-	1976	-		64	Traffic light	0	-	Average (of DGAC and PCC)	0
0+000	50775	Medium trucks	-	1207	-		64	Traffic light	0	-	Average (of DGAC and PCC)	0
0+000	50775	Heavy trucks	-	158	-		64	Traffic light	0	-	Average (of DGAC and PCC)	0
0+000	50775	Buses	-	23	-		64	Traffic light	0	-	Average (of DGAC and PCC)	0
0+000	50775	Motorcycles	-	21	-		64	Traffic light	0	-	Average (of DGAC and PCC)	0
0+000	50775	Auxiliary Vehicle	-	-	-		64	Traffic light	0	-	Average (of DGAC and PCC)	0
Temple City Blvd SB	Traffic direction:	In entry direction										
2+808	*36765*	*Total*	-	*2451*	-	-		*none*	-	-	*Average (of DGAC and PCC)*	*0*
2+808	36765	Automobiles	-	1430	-		64	none	-	-	Average (of DGAC and PCC)	0
2+808	36765	Medium trucks	-	873	-		64	none	-	-	Average (of DGAC and PCC)	0
2+808	36765	Heavy trucks	-	115	-		64	none	-	-	Average (of DGAC and PCC)	0
2+808	36765	Buses	-	17	-		64	none	-	-	Average (of DGAC and PCC)	0
2+808	36765	Motorcycles	-	16	-		64	none	-	-	Average (of DGAC and PCC)	0
2+808	36765	Auxiliary Vehicle	-	-	-		64	none	-	-	Average (of DGAC and PCC)	0
3+362	*36765*	*Total*	-	*2451*	-	-		*Traffic light*	*0*	-	*Average (of DGAC and PCC)*	*0*
3+362	36765	Automobiles	-	1430	-		64	Traffic light	0	-	Average (of DGAC and PCC)	0
3+362	36765	Medium trucks	-	873	-		64	Traffic light	0	-	Average (of DGAC and PCC)	0
3+362	36765	Heavy trucks	-	115	-		64	Traffic light	0	-	Average (of DGAC and PCC)	0
3+362	36765	Buses	-	17	-		64	Traffic light	0	-	Average (of DGAC and PCC)	0
3+362	36765	Motorcycles	-	16	-		64	Traffic light	0	-	Average (of DGAC and PCC)	0
3+362	36765	Auxiliary Vehicle	-	-	-		64	Traffic light	0	-	Average (of DGAC and PCC)	0
3+722	*36765*	*Total*	-	*2451*	-	-		*none*	-	-	*Average (of DGAC and PCC)*	*0*
3+722	36765	Automobiles	-	1430	-		64	none	-	-	Average (of DGAC and PCC)	0
3+722	36765	Medium trucks	-	873	-		64	none	-	-	Average (of DGAC and PCC)	0
3+722	36765	Heavy trucks	-	115	-		64	none	-	-	Average (of DGAC and PCC)	0
3+722	36765	Buses	-	17	-		64	none	-	-	Average (of DGAC and PCC)	0
3+722	36765	Motorcycles	-	16	-		64	none	-	-	Average (of DGAC and PCC)	0
3+722	36765	Auxiliary Vehicle	-	-	-		64	none	-	-	Average (of DGAC and PCC)	0
4+536	*36750*	*Total*	-	*2450*	-	-		*Traffic light*	*0*	-	*Average (of DGAC and PCC)*	*0*
4+536	36750	Automobiles	-	1429	-		64	Traffic light	0	-	Average (of DGAC and PCC)	0
4+536	36750	Medium trucks	-	873	-		64	Traffic light	0	-	Average (of DGAC and PCC)	0
4+536	36750	Heavy trucks	-	115	-		64	Traffic light	0	-	Average (of DGAC and PCC)	0
4+536	36750	Buses	-	17	-		64	Traffic light	0	-	Average (of DGAC and PCC)	0
4+536	36750	Motorcycles	-	16	-		64	Traffic light	0	-	Average (of DGAC and PCC)	0
4+536	36750	Auxiliary Vehicle	-	-	-		64	Traffic light	0	-	Average (of DGAC and PCC)	0
4+670	*36750*	*Total*	-	*2450*	-	-		*none*	-	-	*Average (of DGAC and PCC)*	*0*
4+670	36750	Automobiles	-	1429	-		64	none	-	-	Average (of DGAC and PCC)	0
4+670	36750	Medium trucks	-	873	-		64	none	-	-	Average (of DGAC and PCC)	0
4+670	36750	Heavy trucks	-	115	-		64	none	-	-	Average (of DGAC and PCC)	0
4+670	36750	Buses	-	17	-		64	none	-	-	Average (of DGAC and PCC)	0
4+670	36750	Motorcycles	-	16	-		64	none	-	-	Average (of DGAC and PCC)	0
4+670	36750	Auxiliary Vehicle	-	-	-		64	none	-	-	Average (of DGAC and PCC)	0
5+426	*29685*	*Total*	-	*1979*	-	-		*Traffic light*	*0*	-	*Average (of DGAC and PCC)*	*0*
5+426	29685	Automobiles	-	1154	-		64	Traffic light	0	-	Average (of DGAC and PCC)	0
5+426	29685	Medium trucks	-	705	-		64	Traffic light	0	-	Average (of DGAC and PCC)	0
5+426	29685	Heavy trucks	-	93	-		64	Traffic light	0	-	Average (of DGAC and PCC)	0
5+426	29685	Buses	-	14	-		64	Traffic light	0	-	Average (of DGAC and PCC)	0

5+426	29685	Motorcycles	-	13	-	64	Traffic light	0	-	Average (of DGAC and PCC)	0
5+426	29685	Auxiliary Vehicle	-	-	-	64	Traffic light	0	-	Average (of DGAC and PCC)	0
5+698	-					-	-	-	-	-	
0+000	*36405*	*Total*	-	*2427*	-	-	*none*	-	-	*Average (of DGAC and PCC)*	*0*
0+000	36405	Automobiles	-	1417	-	64	none	-	-	Average (of DGAC and PCC)	0
0+000	36405	Medium trucks	-	865	-	64	none	-	-	Average (of DGAC and PCC)	0
0+000	36405	Heavy trucks	-	114	-	64	none	-	-	Average (of DGAC and PCC)	0
0+000	36405	Buses	-	16	-	64	none	-	-	Average (of DGAC and PCC)	0
0+000	36405	Motorcycles	-	15	-	64	none	-	-	Average (of DGAC and PCC)	0
0+000	36405	Auxiliary Vehicle	-	-	-	64	none	-	-	Average (of DGAC and PCC)	0
Temple City Blvd NB	Traffic direction:	In entry direction									
2+808	*36765*	*Total*	-	*2451*	-	-	*none*	-	-	*Average (of DGAC and PCC)*	*0*
2+808	36765	Automobiles	-	1430	-	40	none	-	-	Average (of DGAC and PCC)	0
2+808	36765	Medium trucks	-	873	-	40	none	-	-	Average (of DGAC and PCC)	0
2+808	36765	Heavy trucks	-	115	-	40	none	-	-	Average (of DGAC and PCC)	0
2+808	36765	Buses	-	17	-	40	none	-	-	Average (of DGAC and PCC)	0
2+808	36765	Motorcycles	-	16	-	40	none	-	-	Average (of DGAC and PCC)	0
2+808	36765	Auxiliary Vehicle	-	-	-	40	none	-	-	Average (of DGAC and PCC)	0
3+073	*30435*	*Total*	-	*2029*	-	-	*none*	-	-	*Average (of DGAC and PCC)*	*0*
3+073	30435	Automobiles	-	1184	-	40	none	-	-	Average (of DGAC and PCC)	0
3+073	30435	Medium trucks	-	723	-	40	none	-	-	Average (of DGAC and PCC)	0
3+073	30435	Heavy trucks	-	95	-	40	none	-	-	Average (of DGAC and PCC)	0
3+073	30435	Buses	-	14	-	40	none	-	-	Average (of DGAC and PCC)	0
3+073	30435	Motorcycles	-	13	-	40	none	-	-	Average (of DGAC and PCC)	0
3+073	30435	Auxiliary Vehicle	-	-	-	40	none	-	-	Average (of DGAC and PCC)	0
3+826	*30435*	*Total*	-	*2029*	-	-	*none*	-	-	*Average (of DGAC and PCC)*	*0*
3+826	30435	Automobiles	-	1184	-	40	none	-	-	Average (of DGAC and PCC)	0
3+826	30435	Medium trucks	-	723	-	40	none	-	-	Average (of DGAC and PCC)	0
3+826	30435	Heavy trucks	-	95	-	40	none	-	-	Average (of DGAC and PCC)	0
3+826	30435	Buses	-	14	-	40	none	-	-	Average (of DGAC and PCC)	0
3+826	30435	Motorcycles	-	13	-	40	none	-	-	Average (of DGAC and PCC)	0
3+826	30435	Auxiliary Vehicle	-	-	-	40	none	-	-	Average (of DGAC and PCC)	0
3+962	*37380*	*Total*	-	*2492*	-	-	*Traffic light*	*0*	-	*Average (of DGAC and PCC)*	*0*
3+962	37380	Automobiles	-	1454	-	64	Traffic light	0	-	Average (of DGAC and PCC)	0
3+962	37380	Medium trucks	-	888	-	64	Traffic light	0	-	Average (of DGAC and PCC)	0
3+962	37380	Heavy trucks	-	117	-	64	Traffic light	0	-	Average (of DGAC and PCC)	0
3+962	37380	Buses	-	17	-	64	Traffic light	0	-	Average (of DGAC and PCC)	0
3+962	37380	Motorcycles	-	16	-	64	Traffic light	0	-	Average (of DGAC and PCC)	0
3+962	37380	Auxiliary Vehicle	-	-	-	64	Traffic light	0	-	Average (of DGAC and PCC)	0
4+780	*37380*	*Total*	-	*2492*	-	-	*none*	-	-	*Average (of DGAC and PCC)*	*0*
4+780	37380	Automobiles	-	1454	-	64	none	-	-	Average (of DGAC and PCC)	0
4+780	37380	Medium trucks	-	888	-	64	none	-	-	Average (of DGAC and PCC)	0
4+780	37380	Heavy trucks	-	117	-	64	none	-	-	Average (of DGAC and PCC)	0
4+780	37380	Buses	-	17	-	64	none	-	-	Average (of DGAC and PCC)	0
4+780	37380	Motorcycles	-	16	-	64	none	-	-	Average (of DGAC and PCC)	0
4+780	37380	Auxiliary Vehicle	-	-	-	64	none	-	-	Average (of DGAC and PCC)	0
5+141	*36585*	*Total*	-	*2439*	-	-	*Traffic light*	*0*	-	*Average (of DGAC and PCC)*	*0*
5+141	36585	Automobiles	-	1423	-	64	Traffic light	0	-	Average (of DGAC and PCC)	0
5+141	36585	Medium trucks	-	869	-	64	Traffic light	0	-	Average (of DGAC and PCC)	0
5+141	36585	Heavy trucks	-	114	-	64	Traffic light	0	-	Average (of DGAC and PCC)	0
5+141	36585	Buses	-	17	-	64	Traffic light	0	-	Average (of DGAC and PCC)	0
5+141	36585	Motorcycles	-	16	-	64	Traffic light	0	-	Average (of DGAC and PCC)	0
5+141	36585	Auxiliary Vehicle	-	-	-	64	Traffic light	0	-	Average (of DGAC and PCC)	0
5+689	-					-	-	-	-	-	
0+000	*36585*	*Total*	-	*2439*	-	-	*none*	-	-	*Average (of DGAC and PCC)*	*0*
0+000	36585	Automobiles	-	1423	-	64	none	-	-	Average (of DGAC and PCC)	0
0+000	36585	Medium trucks	-	869	-	64	none	-	-	Average (of DGAC and PCC)	0
0+000	36585	Heavy trucks	-	114	-	64	none	-	-	Average (of DGAC and PCC)	0
0+000	36585	Buses	-	17	-	64	none	-	-	Average (of DGAC and PCC)	0
0+000	36585	Motorcycles	-	16	-	64	none	-	-	Average (of DGAC and PCC)	0
0+000	36585	Auxiliary Vehicle	-	-	-	64	none	-	-	Average (of DGAC and PCC)	0
Chico Ave SB	Traffic direction:	In entry direction									

2+808	*8430*	*Total*	-	*562*	-	-	*Traffic light*	*0*	-	*Average (of DGAC and PCC)*		*0*
2+808	8430	Automobiles	-	327	-		40 Traffic light	0	-	Average (of DGAC and PCC)		0
2+808	8430	Medium trucks	-	200	-		40 Traffic light	0	-	Average (of DGAC and PCC)		0
2+808	8430	Heavy trucks	-	27	-		40 Traffic light	0	-	Average (of DGAC and PCC)		0
2+808	8430	Buses	-	4	-		40 Traffic light	0	-	Average (of DGAC and PCC)		0
2+808	8430	Motorcycles	-	4	-		40 Traffic light	0	-	Average (of DGAC and PCC)		0
2+808	8430	Auxiliary Vehicle	-	-	-		40 Traffic light	0	-	Average (of DGAC and PCC)		0
3+422	-						-	-	-	-	-	
0+000	*8430*	*Total*	-	*562*	-	-	*none*	-	-	*Average (of DGAC and PCC)*		*0*
0+000	8430	Automobiles	-	327	-		40 none	-	-	Average (of DGAC and PCC)		0
0+000	8430	Medium trucks	-	200	-		40 none	-	-	Average (of DGAC and PCC)		0
0+000	8430	Heavy trucks	-	27	-		40 none	-	-	Average (of DGAC and PCC)		0
0+000	8430	Buses	-	4	-		40 none	-	-	Average (of DGAC and PCC)		0
0+000	8430	Motorcycles	-	4	-		40 none	-	-	Average (of DGAC and PCC)		0
0+000	8430	Auxiliary Vehicle	-	-	-		40 none	-	-	Average (of DGAC and PCC)		0
Merced Ave NB	Traffic direction:	In entry direction										
2+808	*480*	*Total*	-	*32*	-	-	*Traffic light*	*0*	-	*Average (of DGAC and PCC)*		*0*
2+808	480	Automobiles	-	17	-		56 Traffic light	0	-	Average (of DGAC and PCC)		0
2+808	480	Medium trucks	-	11	-		56 Traffic light	0	-	Average (of DGAC and PCC)		0
2+808	480	Heavy trucks	-	2	-		56 Traffic light	0	-	Average (of DGAC and PCC)		0
2+808	480	Buses	-	1	-		56 Traffic light	0	-	Average (of DGAC and PCC)		0
2+808	480	Motorcycles	-	1	-		56 Traffic light	0	-	Average (of DGAC and PCC)		0
2+808	480	Auxiliary Vehicle	-	-	-		56 Traffic light	0	-	Average (of DGAC and PCC)		0
3+415	-						-	-	-	-	-	
0+000	*480*	*Total*	-	*32*	-	-	*Traffic light*	*0*	-	*Average (of DGAC and PCC)*		*0*
0+000	480	Automobiles	-	17	-		56 Traffic light	0	-	Average (of DGAC and PCC)		0
0+000	480	Medium trucks	-	11	-		56 Traffic light	0	-	Average (of DGAC and PCC)		0
0+000	480	Heavy trucks	-	2	-		56 Traffic light	0	-	Average (of DGAC and PCC)		0
0+000	480	Buses	-	1	-		56 Traffic light	0	-	Average (of DGAC and PCC)		0
0+000	480	Motorcycles	-	1	-		56 Traffic light	0	-	Average (of DGAC and PCC)		0
0+000	480	Auxiliary Vehicle	-	-	-		56 Traffic light	0	-	Average (of DGAC and PCC)		0
Merced Ave SB	Traffic direction:	In entry direction										
2+808	*12990*	*Total*	-	*866*	-	-	*none*	-	-	*Average (of DGAC and PCC)*		*0*
2+808	12990	Automobiles	-	505	-		56 none	-	-	Average (of DGAC and PCC)		0
2+808	12990	Medium trucks	-	308	-		56 none	-	-	Average (of DGAC and PCC)		0
2+808	12990	Heavy trucks	-	41	-		56 none	-	-	Average (of DGAC and PCC)		0
2+808	12990	Buses	-	6	-		56 none	-	-	Average (of DGAC and PCC)		0
2+808	12990	Motorcycles	-	6	-		56 none	-	-	Average (of DGAC and PCC)		0
2+808	12990	Auxiliary Vehicle	-	-	-		56 none	-	-	Average (of DGAC and PCC)		0
3+429	*12990*	*Total*	-	*866*	-	-	*Traffic light*	*0*	-	*Average (of DGAC and PCC)*		*0*
3+429	12990	Automobiles	-	505	-		56 Traffic light	0	-	Average (of DGAC and PCC)		0
3+429	12990	Medium trucks	-	308	-		56 Traffic light	0	-	Average (of DGAC and PCC)		0
3+429	12990	Heavy trucks	-	41	-		56 Traffic light	0	-	Average (of DGAC and PCC)		0
3+429	12990	Buses	-	6	-		56 Traffic light	0	-	Average (of DGAC and PCC)		0
3+429	12990	Motorcycles	-	6	-		56 Traffic light	0	-	Average (of DGAC and PCC)		0
3+429	12990	Auxiliary Vehicle	-	-	-		56 Traffic light	0	-	Average (of DGAC and PCC)		0
3+934	-						-	-	-	-	-	
0+000	*12990*	*Total*	-	*866*	-	-	*none*	-	-	*Average (of DGAC and PCC)*		*0*
0+000	12990	Automobiles	-	505	-		56 none	-	-	Average (of DGAC and PCC)		0
0+000	12990	Medium trucks	-	308	-		56 none	-	-	Average (of DGAC and PCC)		0
0+000	12990	Heavy trucks	-	41	-		56 none	-	-	Average (of DGAC and PCC)		0
0+000	12990	Buses	-	6	-		56 none	-	-	Average (of DGAC and PCC)		0
0+000	12990	Motorcycles	-	6	-		56 none	-	-	Average (of DGAC and PCC)		0
0+000	12990	Auxiliary Vehicle	-	-	-		56 none	-	-	Average (of DGAC and PCC)		0
Merced Ave NB	Traffic direction:	In entry direction										
2+808	*9855*	*Total*	-	*657*	-	-	*none*	-	-	*Average (of DGAC and PCC)*		*0*
2+808	9855	Automobiles	-	382	-		56 none	-	-	Average (of DGAC and PCC)		0
2+808	9855	Medium trucks	-	234	-		56 none	-	-	Average (of DGAC and PCC)		0
2+808	9855	Heavy trucks	-	31	-		56 none	-	-	Average (of DGAC and PCC)		0
2+808	9855	Buses	-	5	-		56 none	-	-	Average (of DGAC and PCC)		0
2+808	9855	Motorcycles	-	5	-		56 none	-	-	Average (of DGAC and PCC)		0
2+808	9855	Auxiliary Vehicle	-	-	-		56 none	-	-	Average (of DGAC and PCC)		0

3+322	*9855*	*Total*	-	*657*	-	-	*Traffic light*	*0*	-	*Average (of DGAC and PCC)*		*0*
3+322	9855	Automobiles	-	382	-		56	Traffic light	0	-	Average (of DGAC and PCC)	0
3+322	9855	Medium trucks	-	234	-		56	Traffic light	0	-	Average (of DGAC and PCC)	0
3+322	9855	Heavy trucks	-	31	-		56	Traffic light	0	-	Average (of DGAC and PCC)	0
3+322	9855	Buses	-	5	-		56	Traffic light	0	-	Average (of DGAC and PCC)	0
3+322	9855	Motorcycles	-	5	-		56	Traffic light	0	-	Average (of DGAC and PCC)	0
3+322	9855	Auxiliary Vehicle	-	-	-		56	Traffic light	0	-	Average (of DGAC and PCC)	0
3+920	-						-	-	-	-	-	
0+000	*9855*	*Total*	-	*657*	-	-	*none*	-	-	*Average (of DGAC and PCC)*		*0*
0+000	9855	Automobiles	-	382	-		56	none	-	-	Average (of DGAC and PCC)	0
0+000	9855	Medium trucks	-	234	-		56	none	-	-	Average (of DGAC and PCC)	0
0+000	9855	Heavy trucks	-	31	-		56	none	-	-	Average (of DGAC and PCC)	0
0+000	9855	Buses	-	5	-		56	none	-	-	Average (of DGAC and PCC)	0
0+000	9855	Motorcycles	-	5	-		56	none	-	-	Average (of DGAC and PCC)	0
0+000	9855	Auxiliary Vehicle	-	-	-		56	none	-	-	Average (of DGAC and PCC)	0
Glendon Way EB	Traffic direction:	In entry direction										
2+808	*18870*	*Total*	-	*1258*	-	-	*none*	-	-	*Average (of DGAC and PCC)*		*0*
2+808	18870	Automobiles	-	734	-		48	none	-	-	Average (of DGAC and PCC)	0
2+808	18870	Medium trucks	-	448	-		48	none	-	-	Average (of DGAC and PCC)	0
2+808	18870	Heavy trucks	-	59	-		48	none	-	-	Average (of DGAC and PCC)	0
2+808	18870	Buses	-	9	-		48	none	-	-	Average (of DGAC and PCC)	0
2+808	18870	Motorcycles	-	8	-		48	none	-	-	Average (of DGAC and PCC)	0
2+808	18870	Auxiliary Vehicle	-	-	-		48	none	-	-	Average (of DGAC and PCC)	0
3+208	*18870*	*Total*	-	*1258*	-	-	*Traffic light*	*0*	-	*Average (of DGAC and PCC)*		*0*
3+208	18870	Automobiles	-	734	-		48	Traffic light	0	-	Average (of DGAC and PCC)	0
3+208	18870	Medium trucks	-	448	-		48	Traffic light	0	-	Average (of DGAC and PCC)	0
3+208	18870	Heavy trucks	-	59	-		48	Traffic light	0	-	Average (of DGAC and PCC)	0
3+208	18870	Buses	-	9	-		48	Traffic light	0	-	Average (of DGAC and PCC)	0
3+208	18870	Motorcycles	-	8	-		48	Traffic light	0	-	Average (of DGAC and PCC)	0
3+208	18870	Auxiliary Vehicle	-	-	-		48	Traffic light	0	-	Average (of DGAC and PCC)	0
3+410	-						-	-	-	-	-	
0+000	*18870*	*Total*	-	*1258*	-	-	*none*	-	-	*Average (of DGAC and PCC)*		*0*
0+000	18870	Automobiles	-	734	-		48	none	-	-	Average (of DGAC and PCC)	0
0+000	18870	Medium trucks	-	448	-		48	none	-	-	Average (of DGAC and PCC)	0
0+000	18870	Heavy trucks	-	59	-		48	none	-	-	Average (of DGAC and PCC)	0
0+000	18870	Buses	-	9	-		48	none	-	-	Average (of DGAC and PCC)	0
0+000	18870	Motorcycles	-	8	-		48	none	-	-	Average (of DGAC and PCC)	0
0+000	18870	Auxiliary Vehicle	-	-	-		48	none	-	-	Average (of DGAC and PCC)	0
Glendon Way WB	Traffic direction:	In entry direction										
3+410	*15330*	*Total*	-	*1022*	-	-	*none*	-	-	*Average (of DGAC and PCC)*		*0*
3+410	15330	Automobiles	-	596	-		48	none	-	-	Average (of DGAC and PCC)	0
3+410	15330	Medium trucks	-	364	-		48	none	-	-	Average (of DGAC and PCC)	0
3+410	15330	Heavy trucks	-	48	-		48	none	-	-	Average (of DGAC and PCC)	0
3+410	15330	Buses	-	7	-		48	none	-	-	Average (of DGAC and PCC)	0
3+410	15330	Motorcycles	-	7	-		48	none	-	-	Average (of DGAC and PCC)	0
3+410	15330	Auxiliary Vehicle	-	-	-		48	none	-	-	Average (of DGAC and PCC)	0
3+593	*15330*	*Total*	-	*1022*	-	-	*Traffic light*	*0*	-	*Average (of DGAC and PCC)*		*0*
3+593	15330	Automobiles	-	596	-		48	Traffic light	0	-	Average (of DGAC and PCC)	0
3+593	15330	Medium trucks	-	364	-		48	Traffic light	0	-	Average (of DGAC and PCC)	0
3+593	15330	Heavy trucks	-	48	-		48	Traffic light	0	-	Average (of DGAC and PCC)	0
3+593	15330	Buses	-	7	-		48	Traffic light	0	-	Average (of DGAC and PCC)	0
3+593	15330	Motorcycles	-	7	-		48	Traffic light	0	-	Average (of DGAC and PCC)	0
3+593	15330	Auxiliary Vehicle	-	-	-		48	Traffic light	0	-	Average (of DGAC and PCC)	0
4+011	-						-	-	-	-	-	
0+000	*15330*	*Total*	-	*1022*	-	-	*none*	-	-	*Average (of DGAC and PCC)*		*0*
0+000	15330	Automobiles	-	596	-		48	none	-	-	Average (of DGAC and PCC)	0
0+000	15330	Medium trucks	-	364	-		48	none	-	-	Average (of DGAC and PCC)	0
0+000	15330	Heavy trucks	-	48	-		48	none	-	-	Average (of DGAC and PCC)	0
0+000	15330	Buses	-	7	-		48	none	-	-	Average (of DGAC and PCC)	0
0+000	15330	Motorcycles	-	7	-		48	none	-	-	Average (of DGAC and PCC)	0
0+000	15330	Auxiliary Vehicle	-	-	-		48	none	-	-	Average (of DGAC and PCC)	0
Rush St EB	Traffic direction:	In entry direction										

3+410	*27315*	*Total*	-	*1821*	-	-	*none*	-	-	*Average (of DGAC and PCC)*		*0*
3+410	27315	Automobiles	-	1063	-		56 none	-	-	Average (of DGAC and PCC)		0
3+410	27315	Medium trucks	-	649	-		56 none	-	-	Average (of DGAC and PCC)		0
3+410	27315	Heavy trucks	-	85	-		56 none	-	-	Average (of DGAC and PCC)		0
3+410	27315	Buses	-	12	-		56 none	-	-	Average (of DGAC and PCC)		0
3+410	27315	Motorcycles	-	12	-		56 none	-	-	Average (of DGAC and PCC)		0
3+410	27315	Auxiliary Vehicle	-	-	-		56 none	-	-	Average (of DGAC and PCC)		0
3+836	*27315*	*Total*	-	*1821*	-	-	*Traffic light*	*0*	-	*Average (of DGAC and PCC)*		*0*
3+836	27315	Automobiles	-	1063	-		56 Traffic light	0	-	Average (of DGAC and PCC)		0
3+836	27315	Medium trucks	-	649	-		56 Traffic light	0	-	Average (of DGAC and PCC)		0
3+836	27315	Heavy trucks	-	85	-		56 Traffic light	0	-	Average (of DGAC and PCC)		0
3+836	27315	Buses	-	12	-		56 Traffic light	0	-	Average (of DGAC and PCC)		0
3+836	27315	Motorcycles	-	12	-		56 Traffic light	0	-	Average (of DGAC and PCC)		0
3+836	27315	Auxiliary Vehicle	-	-	-		56 Traffic light	0	-	Average (of DGAC and PCC)		0
4+734	-						-	-	-	-	-	
0+000	*27315*	*Total*	-	*1821*	-	-	*none*	-	-	*Average (of DGAC and PCC)*		*0*
0+000	27315	Automobiles	-	1063	-		56 none	-	-	Average (of DGAC and PCC)		0
0+000	27315	Medium trucks	-	649	-		56 none	-	-	Average (of DGAC and PCC)		0
0+000	27315	Heavy trucks	-	85	-		56 none	-	-	Average (of DGAC and PCC)		0
0+000	27315	Buses	-	12	-		56 none	-	-	Average (of DGAC and PCC)		0
0+000	27315	Motorcycles	-	12	-		56 none	-	-	Average (of DGAC and PCC)		0
0+000	27315	Auxiliary Vehicle	-	-	-		56 none	-	-	Average (of DGAC and PCC)		0
Rush St WB	Traffic direction:	In entry direction										
4+734	*8505*	*Total*	-	*567*	-	-	*none*	-	-	*Average (of DGAC and PCC)*		*0*
4+734	8505	Automobiles	-	330	-		56 none	-	-	Average (of DGAC and PCC)		0
4+734	8505	Medium trucks	-	202	-		56 none	-	-	Average (of DGAC and PCC)		0
4+734	8505	Heavy trucks	-	27	-		56 none	-	-	Average (of DGAC and PCC)		0
4+734	8505	Buses	-	4	-		56 none	-	-	Average (of DGAC and PCC)		0
4+734	8505	Motorcycles	-	4	-		56 none	-	-	Average (of DGAC and PCC)		0
4+734	8505	Auxiliary Vehicle	-	-	-		56 none	-	-	Average (of DGAC and PCC)		0
5+605	*8505*	*Total*	-	*567*	-	-	*Traffic light*	*0*	-	*Average (of DGAC and PCC)*		*0*
5+605	8505	Automobiles	-	330	-		56 Traffic light	0	-	Average (of DGAC and PCC)		0
5+605	8505	Medium trucks	-	202	-		56 Traffic light	0	-	Average (of DGAC and PCC)		0
5+605	8505	Heavy trucks	-	27	-		56 Traffic light	0	-	Average (of DGAC and PCC)		0
5+605	8505	Buses	-	4	-		56 Traffic light	0	-	Average (of DGAC and PCC)		0
5+605	8505	Motorcycles	-	4	-		56 Traffic light	0	-	Average (of DGAC and PCC)		0
5+605	8505	Auxiliary Vehicle	-	-	-		56 Traffic light	0	-	Average (of DGAC and PCC)		0
6+061	-						-	-	-	-	-	
0+000	*8505*	*Total*	-	*567*	-	-	*none*	-	-	*Average (of DGAC and PCC)*		*0*
0+000	8505	Automobiles	-	330	-		56 none	-	-	Average (of DGAC and PCC)		0
0+000	8505	Medium trucks	-	202	-		56 none	-	-	Average (of DGAC and PCC)		0
0+000	8505	Heavy trucks	-	27	-		56 none	-	-	Average (of DGAC and PCC)		0
0+000	8505	Buses	-	4	-		56 none	-	-	Average (of DGAC and PCC)		0
0+000	8505	Motorcycles	-	4	-		56 none	-	-	Average (of DGAC and PCC)		0
0+000	8505	Auxiliary Vehicle	-	-	-		56 none	-	-	Average (of DGAC and PCC)		0
Garvey Ave EB	Traffic direction:	In entry direction										
4+734	*43665*	*Total*	-	*2911*	-	-	*none*	-	-	*Average (of DGAC and PCC)*		*0*
4+734	43665	Automobiles	-	1699	-		56 none	-	-	Average (of DGAC and PCC)		0
4+734	43665	Medium trucks	-	1038	-		56 none	-	-	Average (of DGAC and PCC)		0
4+734	43665	Heavy trucks	-	136	-		56 none	-	-	Average (of DGAC and PCC)		0
4+734	43665	Buses	-	20	-		56 none	-	-	Average (of DGAC and PCC)		0
4+734	43665	Motorcycles	-	18	-		56 none	-	-	Average (of DGAC and PCC)		0
4+734	43665	Auxiliary Vehicle	-	-	-		56 none	-	-	Average (of DGAC and PCC)		0
5+192	*43665*	*Total*	-	*2911*	-	-	*Traffic light*	*0*	-	*Average (of DGAC and PCC)*		*0*
5+192	43665	Automobiles	-	1699	-		56 Traffic light	0	-	Average (of DGAC and PCC)		0
5+192	43665	Medium trucks	-	1038	-		56 Traffic light	0	-	Average (of DGAC and PCC)		0
5+192	43665	Heavy trucks	-	136	-		56 Traffic light	0	-	Average (of DGAC and PCC)		0
5+192	43665	Buses	-	20	-		56 Traffic light	0	-	Average (of DGAC and PCC)		0
5+192	43665	Motorcycles	-	18	-		56 Traffic light	0	-	Average (of DGAC and PCC)		0
5+192	43665	Auxiliary Vehicle	-	-	-		56 Traffic light	0	-	Average (of DGAC and PCC)		0
7+099	*41955*	*Total*	-	*2797*	-	-	*Traffic light*	*0*	-	*Average (of DGAC and PCC)*		*0*
7+099	41955	Automobiles	-	1632	-		56 Traffic light	0	-	Average (of DGAC and PCC)		0

7+099	41955	Medium trucks	-	997	-	56	Traffic light	0	-	Average (of DGAC and PCC)	0
7+099	41955	Heavy trucks	-	131	-	56	Traffic light	0	-	Average (of DGAC and PCC)	0
7+099	41955	Buses	-	19	-	56	Traffic light	0	-	Average (of DGAC and PCC)	0
7+099	41955	Motorcycles	-	18	-	56	Traffic light	0	-	Average (of DGAC and PCC)	0
7+099	41955	Auxiliary Vehicle	-	-	-	56	Traffic light	0	-	Average (of DGAC and PCC)	0
7+714	*41505*	*Total*	-	*2767*	-	-	*Traffic light*	*0*	-	*Average (of DGAC and PCC)*	*0*
7+714	41505	Automobiles	-	1615	-	56	Traffic light	0	-	Average (of DGAC and PCC)	0
7+714	41505	Medium trucks	-	986	-	56	Traffic light	0	-	Average (of DGAC and PCC)	0
7+714	41505	Heavy trucks	-	129	-	56	Traffic light	0	-	Average (of DGAC and PCC)	0
7+714	41505	Buses	-	19	-	56	Traffic light	0	-	Average (of DGAC and PCC)	0
7+714	41505	Motorcycles	-	18	-	56	Traffic light	0	-	Average (of DGAC and PCC)	0
7+714	41505	Auxiliary Vehicle	-	-	-	56	Traffic light	0	-	Average (of DGAC and PCC)	0
8+723	*36105*	*Total*	-	*2407*	-	-	*Traffic light*	*0*	-	*Average (of DGAC and PCC)*	*0*
8+723	36105	Automobiles	-	1405	-	56	Traffic light	0	-	Average (of DGAC and PCC)	0
8+723	36105	Medium trucks	-	858	-	56	Traffic light	0	-	Average (of DGAC and PCC)	0
8+723	36105	Heavy trucks	-	113	-	56	Traffic light	0	-	Average (of DGAC and PCC)	0
8+723	36105	Buses	-	16	-	56	Traffic light	0	-	Average (of DGAC and PCC)	0
8+723	36105	Motorcycles	-	15	-	56	Traffic light	0	-	Average (of DGAC and PCC)	0
8+723	36105	Auxiliary Vehicle	-	-	-	56	Traffic light	0	-	Average (of DGAC and PCC)	0
9+740	*34920*	*Total*	-	*2328*	-	-	*Traffic light*	*0*	-	*Average (of DGAC and PCC)*	*0*
9+740	34920	Automobiles	-	1358	-	56	Traffic light	0	-	Average (of DGAC and PCC)	0
9+740	34920	Medium trucks	-	830	-	56	Traffic light	0	-	Average (of DGAC and PCC)	0
9+740	34920	Heavy trucks	-	109	-	56	Traffic light	0	-	Average (of DGAC and PCC)	0
9+740	34920	Buses	-	16	-	56	Traffic light	0	-	Average (of DGAC and PCC)	0
9+740	34920	Motorcycles	-	15	-	56	Traffic light	0	-	Average (of DGAC and PCC)	0
9+740	34920	Auxiliary Vehicle	-	-	-	56	Traffic light	0	-	Average (of DGAC and PCC)	0
10+522	*36420*	*Total*	-	*2428*	-	-	*Traffic light*	*0*	-	*Average (of DGAC and PCC)*	*0*
10+522	36420	Automobiles	-	1417	-	56	Traffic light	0	-	Average (of DGAC and PCC)	0
10+522	36420	Medium trucks	-	866	-	56	Traffic light	0	-	Average (of DGAC and PCC)	0
10+522	36420	Heavy trucks	-	114	-	56	Traffic light	0	-	Average (of DGAC and PCC)	0
10+522	36420	Buses	-	16	-	56	Traffic light	0	-	Average (of DGAC and PCC)	0
10+522	36420	Motorcycles	-	15	-	56	Traffic light	0	-	Average (of DGAC and PCC)	0
10+522	36420	Auxiliary Vehicle	-	-	-	56	Traffic light	0	-	Average (of DGAC and PCC)	0
11+106	*29535*	*Total*	-	*1969*	-	-	*Traffic light*	*0*	-	*Average (of DGAC and PCC)*	*0*
11+106	29535	Automobiles	-	1149	-	56	Traffic light	0	-	Average (of DGAC and PCC)	0
11+106	29535	Medium trucks	-	702	-	56	Traffic light	0	-	Average (of DGAC and PCC)	0
11+106	29535	Heavy trucks	-	92	-	56	Traffic light	0	-	Average (of DGAC and PCC)	0
11+106	29535	Buses	-	13	-	56	Traffic light	0	-	Average (of DGAC and PCC)	0
11+106	29535	Motorcycles	-	13	-	56	Traffic light	0	-	Average (of DGAC and PCC)	0
11+106	29535	Auxiliary Vehicle	-	-	-	56	Traffic light	0	-	Average (of DGAC and PCC)	0
12+391	*28215*	*Total*	-	*1881*	-	-	*Traffic light*	*0*	-	*Average (of DGAC and PCC)*	*0*
12+391	28215	Automobiles	-	1098	-	56	Traffic light	0	-	Average (of DGAC and PCC)	0
12+391	28215	Medium trucks	-	670	-	56	Traffic light	0	-	Average (of DGAC and PCC)	0
12+391	28215	Heavy trucks	-	88	-	56	Traffic light	0	-	Average (of DGAC and PCC)	0
12+391	28215	Buses	-	13	-	56	Traffic light	0	-	Average (of DGAC and PCC)	0
12+391	28215	Motorcycles	-	12	-	56	Traffic light	0	-	Average (of DGAC and PCC)	0
12+391	28215	Auxiliary Vehicle	-	-	-	56	Traffic light	0	-	Average (of DGAC and PCC)	0
12+962	-						-	-	-	-	-
0+000	*28215*	*Total*	-	*1881*	-	-	*none*	-	-	*Average (of DGAC and PCC)*	*0*
0+000	28215	Automobiles	-	1098	-	56	none	-	-	Average (of DGAC and PCC)	0
0+000	28215	Medium trucks	-	670	-	56	none	-	-	Average (of DGAC and PCC)	0
0+000	28215	Heavy trucks	-	88	-	56	none	-	-	Average (of DGAC and PCC)	0
0+000	28215	Buses	-	13	-	56	none	-	-	Average (of DGAC and PCC)	0
0+000	28215	Motorcycles	-	12	-	56	none	-	-	Average (of DGAC and PCC)	0
0+000	28215	Auxiliary Vehicle	-	-	-	56	none	-	-	Average (of DGAC and PCC)	0
Garvey Ave WB	Traffic direction:	In entry direction									
4+734	*32085*	*Total*	-	*2139*	-	-	*none*	-	-	*Average (of DGAC and PCC)*	*0*
4+734	32085	Automobiles	-	1248	-	56	none	-	-	Average (of DGAC and PCC)	0
4+734	32085	Medium trucks	-	762	-	56	none	-	-	Average (of DGAC and PCC)	0
4+734	32085	Heavy trucks	-	100	-	56	none	-	-	Average (of DGAC and PCC)	0
4+734	32085	Buses	-	15	-	56	none	-	-	Average (of DGAC and PCC)	0
4+734	32085	Motorcycles	-	14	-	56	none	-	-	Average (of DGAC and PCC)	0

4+734		32085	Auxiliary Vehicle	-	-	-		56	none	-	-	Average (of DGAC and PCC)	0
5+289		*32085*	*Total*	-		*2139*	-	-	*none*	-	-	*Average (of DGAC and PCC)*	*0*
5+289		32085	Automobiles	-		1248	-		56	none	-	-	Average (of DGAC and PCC)	0
5+289		32085	Medium trucks	-		762	-		56	none	-	-	Average (of DGAC and PCC)	0
5+289		32085	Heavy trucks	-		100	-		56	none	-	-	Average (of DGAC and PCC)	0
5+289		32085	Buses	-		15	-		56	none	-	-	Average (of DGAC and PCC)	0
5+289		32085	Motorcycles	-		14	-		56	none	-	-	Average (of DGAC and PCC)	0
5+289		32085	Auxiliary Vehicle	-	-	-			56	none	-	-	Average (of DGAC and PCC)	0
6+571		*37935*	*Total*	-		*2529*	-	-	*Traffic light*		*0*	-	*Average (of DGAC and PCC)*	*0*
6+571		37935	Automobiles	-		1476	-		56	Traffic light		0	-	Average (of DGAC and PCC)	0
6+571		37935	Medium trucks	-		902	-		56	Traffic light		0	-	Average (of DGAC and PCC)	0
6+571		37935	Heavy trucks	-		118	-		56	Traffic light		0	-	Average (of DGAC and PCC)	0
6+571		37935	Buses	-		17	-		56	Traffic light		0	-	Average (of DGAC and PCC)	0
6+571		37935	Motorcycles	-		16	-		56	Traffic light		0	-	Average (of DGAC and PCC)	0
6+571		37935	Auxiliary Vehicle	-	-	-			56	Traffic light		0	-	Average (of DGAC and PCC)	0
7+167		*36465*	*Total*	-		*2431*	-	-	*Traffic light*		*0*	-	*Average (of DGAC and PCC)*	*0*
7+167		36465	Automobiles	-		1419	-		56	Traffic light		0	-	Average (of DGAC and PCC)	0
7+167		36465	Medium trucks	-		867	-		56	Traffic light		0	-	Average (of DGAC and PCC)	0
7+167		36465	Heavy trucks	-		114	-		56	Traffic light		0	-	Average (of DGAC and PCC)	0
7+167		36465	Buses	-		16	-		56	Traffic light		0	-	Average (of DGAC and PCC)	0
7+167		36465	Motorcycles	-		15	-		56	Traffic light		0	-	Average (of DGAC and PCC)	0
7+167		36465	Auxiliary Vehicle	-	-	-			56	Traffic light		0	-	Average (of DGAC and PCC)	0
7+933		*40710*	*Total*	-		*2714*	-	-	*Traffic light*		*0*	-	*Average (of DGAC and PCC)*	*0*
7+933		40710	Automobiles	-		1584	-		56	Traffic light		0	-	Average (of DGAC and PCC)	0
7+933		40710	Medium trucks	-		968	-		56	Traffic light		0	-	Average (of DGAC and PCC)	0
7+933		40710	Heavy trucks	-		127	-		56	Traffic light		0	-	Average (of DGAC and PCC)	0
7+933		40710	Buses	-		18	-		56	Traffic light		0	-	Average (of DGAC and PCC)	0
7+933		40710	Motorcycles	-		17	-		56	Traffic light		0	-	Average (of DGAC and PCC)	0
7+933		40710	Auxiliary Vehicle	-	-	-			56	Traffic light		0	-	Average (of DGAC and PCC)	0
8+957		*39165*	*Total*	-		*2611*	-	-	*Traffic light*		*0*	-	*Average (of DGAC and PCC)*	*0*
8+957		39165	Automobiles	-		1524	-		56	Traffic light		0	-	Average (of DGAC and PCC)	0
8+957		39165	Medium trucks	-		930	-		56	Traffic light		0	-	Average (of DGAC and PCC)	0
8+957		39165	Heavy trucks	-		122	-		56	Traffic light		0	-	Average (of DGAC and PCC)	0
8+957		39165	Buses	-		18	-		56	Traffic light		0	-	Average (of DGAC and PCC)	0
8+957		39165	Motorcycles	-		17	-		56	Traffic light		0	-	Average (of DGAC and PCC)	0
8+957		39165	Auxiliary Vehicle	-	-	-			56	Traffic light		0	-	Average (of DGAC and PCC)	0
9+957		*40905*	*Total*	-		*2727*	-	-	*Traffic light*		*0*	-	*Average (of DGAC and PCC)*	*0*
9+957		40905	Automobiles	-		1592	-		56	Traffic light		0	-	Average (of DGAC and PCC)	0
9+957		40905	Medium trucks	-		972	-		56	Traffic light		0	-	Average (of DGAC and PCC)	0
9+957		40905	Heavy trucks	-		128	-		56	Traffic light		0	-	Average (of DGAC and PCC)	0
9+957		40905	Buses	-		18	-		56	Traffic light		0	-	Average (of DGAC and PCC)	0
9+957		40905	Motorcycles	-		17	-		56	Traffic light		0	-	Average (of DGAC and PCC)	0
9+957		40905	Auxiliary Vehicle	-	-	-			56	Traffic light		0	-	Average (of DGAC and PCC)	0
10+579		*37215*	*Total*	-		*2481*	-	-	*Traffic light*		*0*	-	*Average (of DGAC and PCC)*	*0*
10+579		37215	Automobiles	-		1448	-		56	Traffic light		0	-	Average (of DGAC and PCC)	0
10+579		37215	Medium trucks	-		884	-		56	Traffic light		0	-	Average (of DGAC and PCC)	0
10+579		37215	Heavy trucks	-		116	-		56	Traffic light		0	-	Average (of DGAC and PCC)	0
10+579		37215	Buses	-		17	-		56	Traffic light		0	-	Average (of DGAC and PCC)	0
10+579		37215	Motorcycles	-		16	-		56	Traffic light		0	-	Average (of DGAC and PCC)	0
10+579		37215	Auxiliary Vehicle	-	-	-			56	Traffic light		0	-	Average (of DGAC and PCC)	0
12+470		*41745*	*Total*	-		*2783*	-	-	*Traffic light*		*0*	-	*Average (of DGAC and PCC)*	*0*
12+470		41745	Automobiles	-		1624	-		56	Traffic light		0	-	Average (of DGAC and PCC)	0
12+470		41745	Medium trucks	-		992	-		56	Traffic light		0	-	Average (of DGAC and PCC)	0
12+470		41745	Heavy trucks	-		130	-		56	Traffic light		0	-	Average (of DGAC and PCC)	0
12+470		41745	Buses	-		19	-		56	Traffic light		0	-	Average (of DGAC and PCC)	0
12+470		41745	Motorcycles	-		18	-		56	Traffic light		0	-	Average (of DGAC and PCC)	0
12+470		41745	Auxiliary Vehicle	-	-	-			56	Traffic light		0	-	Average (of DGAC and PCC)	0
12+959	-								-		-	-	-	-	
0+000		*41745*	*Total*	-		*2783*	-	-	*none*	-	-	*Average (of DGAC and PCC)*	*0*
0+000		41745	Automobiles	-		1624	-		56	none	-	-	Average (of DGAC and PCC)	0
0+000		41745	Medium trucks	-		992	-		56	none	-	-	Average (of DGAC and PCC)	0
0+000		41745	Heavy trucks	-		130	-		56	none	-	-	Average (of DGAC and PCC)	0

0+000	41745	Buses	-		19	-	56	none	-	-	Average (of DGAC and PCC)	0
0+000	41745	Motorcycles	-		18	-	56	none	-	-	Average (of DGAC and PCC)	0
0+000	41745	Auxiliary Vehicle	-	-	-		56	none	-	-	Average (of DGAC and PCC)	0
Las Tunas Dr EB	Traffic direction:	In entry direction										
2+808	*40065*	*Total*	-		*2671*	-	-	*none*	-	-	*Average (of DGAC and PCC)*	*0*
2+808	40065	Automobiles	-		1559	-	48	none	-	-	Average (of DGAC and PCC)	0
2+808	40065	Medium trucks	-		952	-	48	none	-	-	Average (of DGAC and PCC)	0
2+808	40065	Heavy trucks	-		125	-	48	none	-	-	Average (of DGAC and PCC)	0
2+808	40065	Buses	-		18	-	48	none	-	-	Average (of DGAC and PCC)	0
2+808	40065	Motorcycles	-		17	-	48	none	-	-	Average (of DGAC and PCC)	0
2+808	40065	Auxiliary Vehicle	-	-	-		48	none	-	-	Average (of DGAC and PCC)	0
3+588	*40065*	*Total*	-		*2671*	-	-	*none*	-	-	*Average (of DGAC and PCC)*	*0*
3+588	40065	Automobiles	-		1559	-	48	none	-	-	Average (of DGAC and PCC)	0
3+588	40065	Medium trucks	-		952	-	48	none	-	-	Average (of DGAC and PCC)	0
3+588	40065	Heavy trucks	-		125	-	48	none	-	-	Average (of DGAC and PCC)	0
3+588	40065	Buses	-		18	-	48	none	-	-	Average (of DGAC and PCC)	0
3+588	40065	Motorcycles	-		17	-	48	none	-	-	Average (of DGAC and PCC)	0
3+588	40065	Auxiliary Vehicle	-	-	-		48	none	-	-	Average (of DGAC and PCC)	0
3+744	*40065*	*Total*	-		*2671*	-	-	*Traffic light*	*0*	-	*Average (of DGAC and PCC)*	*0*
3+744	40065	Automobiles	-		1559	-	48	Traffic light	0	-	Average (of DGAC and PCC)	0
3+744	40065	Medium trucks	-		952	-	48	Traffic light	0	-	Average (of DGAC and PCC)	0
3+744	40065	Heavy trucks	-		125	-	48	Traffic light	0	-	Average (of DGAC and PCC)	0
3+744	40065	Buses	-		18	-	48	Traffic light	0	-	Average (of DGAC and PCC)	0
3+744	40065	Motorcycles	-		17	-	48	Traffic light	0	-	Average (of DGAC and PCC)	0
3+744	40065	Auxiliary Vehicle	-	-	-		48	Traffic light	0	-	Average (of DGAC and PCC)	0
3+954	*40065*	*Total*	-		*2671*	-	-	*none*	-	-	*Average (of DGAC and PCC)*	*0*
3+954	40065	Automobiles	-		1559	-	48	none	-	-	Average (of DGAC and PCC)	0
3+954	40065	Medium trucks	-		952	-	48	none	-	-	Average (of DGAC and PCC)	0
3+954	40065	Heavy trucks	-		125	-	48	none	-	-	Average (of DGAC and PCC)	0
3+954	40065	Buses	-		18	-	48	none	-	-	Average (of DGAC and PCC)	0
3+954	40065	Motorcycles	-		17	-	48	none	-	-	Average (of DGAC and PCC)	0
3+954	40065	Auxiliary Vehicle	-	-	-		48	none	-	-	Average (of DGAC and PCC)	0
4+215	*40065*	*Total*	-		*2671*	-	-	*none*	-	-	*Average (of DGAC and PCC)*	*0*
4+215	40065	Automobiles	-		1559	-	48	none	-	-	Average (of DGAC and PCC)	0
4+215	40065	Medium trucks	-		952	-	48	none	-	-	Average (of DGAC and PCC)	0
4+215	40065	Heavy trucks	-		125	-	48	none	-	-	Average (of DGAC and PCC)	0
4+215	40065	Buses	-		18	-	48	none	-	-	Average (of DGAC and PCC)	0
4+215	40065	Motorcycles	-		17	-	48	none	-	-	Average (of DGAC and PCC)	0
4+215	40065	Auxiliary Vehicle	-	-	-		48	none	-	-	Average (of DGAC and PCC)	0
4+861	-							-	-	-	-	-
0+000	*40065*	*Total*	-		*2671*	-	-	*none*	-	-	*Average (of DGAC and PCC)*	*0*
0+000	40065	Automobiles	-		1559	-	48	none	-	-	Average (of DGAC and PCC)	0
0+000	40065	Medium trucks	-		952	-	48	none	-	-	Average (of DGAC and PCC)	0
0+000	40065	Heavy trucks	-		125	-	48	none	-	-	Average (of DGAC and PCC)	0
0+000	40065	Buses	-		18	-	48	none	-	-	Average (of DGAC and PCC)	0
0+000	40065	Motorcycles	-		17	-	48	none	-	-	Average (of DGAC and PCC)	0
0+000	40065	Auxiliary Vehicle	-	-	-		48	none	-	-	Average (of DGAC and PCC)	0
Las Tunas Dr WB	Traffic direction:	In entry direction										
3+954	*38805*	*Total*	-		*2587*	-	-	*none*	-	-	*Average (of DGAC and PCC)*	*0*
3+954	38805	Automobiles	-		1510	-	48	none	-	-	Average (of DGAC and PCC)	0
3+954	38805	Medium trucks	-		922	-	48	none	-	-	Average (of DGAC and PCC)	0
3+954	38805	Heavy trucks	-		121	-	48	none	-	-	Average (of DGAC and PCC)	0
3+954	38805	Buses	-		18	-	48	none	-	-	Average (of DGAC and PCC)	0
3+954	38805	Motorcycles	-		16	-	48	none	-	-	Average (of DGAC and PCC)	0
3+954	38805	Auxiliary Vehicle	-	-	-		48	none	-	-	Average (of DGAC and PCC)	0
4+598	*38805*	*Total*	-		*2587*	-	-	*Traffic light*	*0*	-	*Average (of DGAC and PCC)*	*0*
4+598	38805	Automobiles	-		1510	-	48	Traffic light	0	-	Average (of DGAC and PCC)	0
4+598	38805	Medium trucks	-		922	-	48	Traffic light	0	-	Average (of DGAC and PCC)	0
4+598	38805	Heavy trucks	-		121	-	48	Traffic light	0	-	Average (of DGAC and PCC)	0
4+598	38805	Buses	-		18	-	48	Traffic light	0	-	Average (of DGAC and PCC)	0
4+598	38805	Motorcycles	-		16	-	48	Traffic light	0	-	Average (of DGAC and PCC)	0
4+598	38805	Auxiliary Vehicle	-	-	-		48	Traffic light	0	-	Average (of DGAC and PCC)	0

4+863	*38805*	*Total*	-	*2587*	-	-	*none*	-	-	*Average (of DGAC and PCC)*			*0*
4+863	38805	Automobiles	-	1510	-		48	none	-	-	Average (of DGAC and PCC)		0
4+863	38805	Medium trucks	-	922	-		48	none	-	-	Average (of DGAC and PCC)		0
4+863	38805	Heavy trucks	-	121	-		48	none	-	-	Average (of DGAC and PCC)		0
4+863	38805	Buses	-	18	-		48	none	-	-	Average (of DGAC and PCC)		0
4+863	38805	Motorcycles	-	16	-		48	none	-	-	Average (of DGAC and PCC)		0
4+863	38805	Auxiliary Vehicle	-	-	-		48	none	-	-	Average (of DGAC and PCC)		0
5+049	*38805*	*Total*	-	*2587*	-	-	*Traffic light*	*0*	-	*Average (of DGAC and PCC)*			*0*
5+049	38805	Automobiles	-	1510	-		48	Traffic light	0	-	Average (of DGAC and PCC)		0
5+049	38805	Medium trucks	-	922	-		48	Traffic light	0	-	Average (of DGAC and PCC)		0
5+049	38805	Heavy trucks	-	121	-		48	Traffic light	0	-	Average (of DGAC and PCC)		0
5+049	38805	Buses	-	18	-		48	Traffic light	0	-	Average (of DGAC and PCC)		0
5+049	38805	Motorcycles	-	16	-		48	Traffic light	0	-	Average (of DGAC and PCC)		0
5+049	38805	Auxiliary Vehicle	-	-	-		48	Traffic light	0	-	Average (of DGAC and PCC)		0
5+216	*38805*	*Total*	-	*2587*	-	-	*none*	-	-	*Average (of DGAC and PCC)*			*0*
5+216	38805	Automobiles	-	1510	-		48	none	-	-	Average (of DGAC and PCC)		0
5+216	38805	Medium trucks	-	922	-		48	none	-	-	Average (of DGAC and PCC)		0
5+216	38805	Heavy trucks	-	121	-		48	none	-	-	Average (of DGAC and PCC)		0
5+216	38805	Buses	-	18	-		48	none	-	-	Average (of DGAC and PCC)		0
5+216	38805	Motorcycles	-	16	-		48	none	-	-	Average (of DGAC and PCC)		0
5+216	38805	Auxiliary Vehicle	-	-	-		48	none	-	-	Average (of DGAC and PCC)		0
6+006	-						-	-	-	-		-	
0+000	*38805*	*Total*	-	*2587*	-	-	*none*	-	-	*Average (of DGAC and PCC)*			*0*
0+000	38805	Automobiles	-	1510	-		48	none	-	-	Average (of DGAC and PCC)		0
0+000	38805	Medium trucks	-	922	-		48	none	-	-	Average (of DGAC and PCC)		0
0+000	38805	Heavy trucks	-	121	-		48	none	-	-	Average (of DGAC and PCC)		0
0+000	38805	Buses	-	18	-		48	none	-	-	Average (of DGAC and PCC)		0
0+000	38805	Motorcycles	-	16	-		48	none	-	-	Average (of DGAC and PCC)		0
0+000	38805	Auxiliary Vehicle	-	-	-		48	none	-	-	Average (of DGAC and PCC)		0
Whitmore St	Traffic direction:	In entry direction											
4+911	*12510*	*Total*	-	*834*	-	-	*Traffic light*	*0*	*100*	*Average (of DGAC and PCC)*			*0*
4+911	12510	Automobiles	-	486	-		40	Traffic light	0	100	Average (of DGAC and PCC)		0
4+911	12510	Medium trucks	-	297	-		40	Traffic light	0	100	Average (of DGAC and PCC)		0
4+911	12510	Heavy trucks	-	39	-		40	Traffic light	0	100	Average (of DGAC and PCC)		0
4+911	12510	Buses	-	6	-		40	Traffic light	0	100	Average (of DGAC and PCC)		0
4+911	12510	Motorcycles	-	6	-		40	Traffic light	0	100	Average (of DGAC and PCC)		0
4+911	12510	Auxiliary Vehicle	-	-	-		40	Traffic light	0	100	Average (of DGAC and PCC)		0
5+219	-						-	-	-	-		-	
0+000	*12510*	*Total*	-	*834*	-	-	*none*	-	-	*Average (of DGAC and PCC)*			*0*
0+000	12510	Automobiles	-	486	-		40	none	-	-	Average (of DGAC and PCC)		0
0+000	12510	Medium trucks	-	297	-		40	none	-	-	Average (of DGAC and PCC)		0
0+000	12510	Heavy trucks	-	39	-		40	none	-	-	Average (of DGAC and PCC)		0
0+000	12510	Buses	-	6	-		40	none	-	-	Average (of DGAC and PCC)		0
0+000	12510	Motorcycles	-	6	-		40	none	-	-	Average (of DGAC and PCC)		0
0+000	12510	Auxiliary Vehicle	-	-	-		40	none	-	-	Average (of DGAC and PCC)		0
Telstar Ave EB	Traffic direction:	In entry direction											
4+911	*26145*	*Total*	-	*1743*	-	-	*Traffic light*	*0*	*100*	*Average (of DGAC and PCC)*			*0*
4+911	26145	Automobiles	-	1017	-		56	Traffic light	0	100	Average (of DGAC and PCC)		0
4+911	26145	Medium trucks	-	621	-		56	Traffic light	0	100	Average (of DGAC and PCC)		0
4+911	26145	Heavy trucks	-	82	-		56	Traffic light	0	100	Average (of DGAC and PCC)		0
4+911	26145	Buses	-	12	-		56	Traffic light	0	100	Average (of DGAC and PCC)		0
4+911	26145	Motorcycles	-	11	-		56	Traffic light	0	100	Average (of DGAC and PCC)		0
4+911	26145	Auxiliary Vehicle	-	-	-		56	Traffic light	0	100	Average (of DGAC and PCC)		0
5+021	*26145*	*Total*	-	*1743*	-	-	*none*	-	-	*Average (of DGAC and PCC)*			*0*
5+021	26145	Automobiles	-	1017	-		56	none	-	-	Average (of DGAC and PCC)		0
5+021	26145	Medium trucks	-	621	-		56	none	-	-	Average (of DGAC and PCC)		0
5+021	26145	Heavy trucks	-	82	-		56	none	-	-	Average (of DGAC and PCC)		0
5+021	26145	Buses	-	12	-		56	none	-	-	Average (of DGAC and PCC)		0
5+021	26145	Motorcycles	-	11	-		56	none	-	-	Average (of DGAC and PCC)		0
5+021	26145	Auxiliary Vehicle	-	-	-		56	none	-	-	Average (of DGAC and PCC)		0
5+045	*26145*	*Total*	-	*1743*	-	-	*none*	-	-	*Average (of DGAC and PCC)*			*0*
5+045	26145	Automobiles	-	1017	-		56	none	-	-	Average (of DGAC and PCC)		0

5+045	26145	Medium trucks	-		621	-		56	none	-	-	Average (of DGAC and PCC)	0
5+045	26145	Heavy trucks	-		82	-		56	none	-	-	Average (of DGAC and PCC)	0
5+045	26145	Buses	-		12	-		56	none	-	-	Average (of DGAC and PCC)	0
5+045	26145	Motorcycles	-		11	-		56	none	-	-	Average (of DGAC and PCC)	0
5+045	26145	Auxiliary Vehicle	-	-	-			56	none	-	-	Average (of DGAC and PCC)	0
5+156	*14355*	*Total*	-		*957*	-	-		*Traffic light*	*0*	-	*Average (of DGAC and PCC)*	*0*
5+156	14355	Automobiles	-		558	-		56	Traffic light	0	-	Average (of DGAC and PCC)	0
5+156	14355	Medium trucks	-		341	-		56	Traffic light	0	-	Average (of DGAC and PCC)	0
5+156	14355	Heavy trucks	-		45	-		56	Traffic light	0	-	Average (of DGAC and PCC)	0
5+156	14355	Buses	-		7	-		56	Traffic light	0	-	Average (of DGAC and PCC)	0
5+156	14355	Motorcycles	-		6	-		56	Traffic light	0	-	Average (of DGAC and PCC)	0
5+156	14355	Auxiliary Vehicle	-	-	-			56	Traffic light	0	-	Average (of DGAC and PCC)	0
5+647	*8370*	*Total*	-		*558*	-	-		*none*	-	-	*Average (of DGAC and PCC)*	*0*
5+647	8370	Automobiles	-		325	-		56	none	-	-	Average (of DGAC and PCC)	0
5+647	8370	Medium trucks	-		199	-		56	none	-	-	Average (of DGAC and PCC)	0
5+647	8370	Heavy trucks	-		26	-		56	none	-	-	Average (of DGAC and PCC)	0
5+647	8370	Buses	-		4	-		56	none	-	-	Average (of DGAC and PCC)	0
5+647	8370	Motorcycles	-		4	-		56	none	-	-	Average (of DGAC and PCC)	0
5+647	8370	Auxiliary Vehicle	-	-	-			56	none	-	-	Average (of DGAC and PCC)	0
5+970	*8370*	*Total*	-		*558*	-	-		*none*	-	-	*Average (of DGAC and PCC)*	*0*
5+970	8370	Automobiles	-		325	-		56	none	-	-	Average (of DGAC and PCC)	0
5+970	8370	Medium trucks	-		199	-		56	none	-	-	Average (of DGAC and PCC)	0
5+970	8370	Heavy trucks	-		26	-		56	none	-	-	Average (of DGAC and PCC)	0
5+970	8370	Buses	-		4	-		56	none	-	-	Average (of DGAC and PCC)	0
5+970	8370	Motorcycles	-		4	-		56	none	-	-	Average (of DGAC and PCC)	0
5+970	8370	Auxiliary Vehicle	-	-	-			56	none	-	-	Average (of DGAC and PCC)	0
6+158	*6765*	*Total*	-		*451*	-	-		*none*	-	-	*Average (of DGAC and PCC)*	*0*
6+158	6765	Automobiles	-		263	-		56	none	-	-	Average (of DGAC and PCC)	0
6+158	6765	Medium trucks	-		161	-		56	none	-	-	Average (of DGAC and PCC)	0
6+158	6765	Heavy trucks	-		21	-		56	none	-	-	Average (of DGAC and PCC)	0
6+158	6765	Buses	-		3	-		56	none	-	-	Average (of DGAC and PCC)	0
6+158	6765	Motorcycles	-		3	-		56	none	-	-	Average (of DGAC and PCC)	0
6+158	6765	Auxiliary Vehicle	-	-	-			56	none	-	-	Average (of DGAC and PCC)	0
6+454	*6765*	*Total*	-		*451*	-	-		*none*	-	-	*Average (of DGAC and PCC)*	*0*
6+454	6765	Automobiles	-		263	-		56	none	-	-	Average (of DGAC and PCC)	0
6+454	6765	Medium trucks	-		161	-		56	none	-	-	Average (of DGAC and PCC)	0
6+454	6765	Heavy trucks	-		21	-		56	none	-	-	Average (of DGAC and PCC)	0
6+454	6765	Buses	-		3	-		56	none	-	-	Average (of DGAC and PCC)	0
6+454	6765	Motorcycles	-		3	-		56	none	-	-	Average (of DGAC and PCC)	0
6+454	6765	Auxiliary Vehicle	-	-	-			56	none	-	-	Average (of DGAC and PCC)	0
6+524	*6765*	*Total*	-		*451*	-	-		*none*	-	-	*Average (of DGAC and PCC)*	*0*
6+524	6765	Automobiles	-		263	-		56	none	-	-	Average (of DGAC and PCC)	0
6+524	6765	Medium trucks	-		161	-		56	none	-	-	Average (of DGAC and PCC)	0
6+524	6765	Heavy trucks	-		21	-		56	none	-	-	Average (of DGAC and PCC)	0
6+524	6765	Buses	-		3	-		56	none	-	-	Average (of DGAC and PCC)	0
6+524	6765	Motorcycles	-		3	-		56	none	-	-	Average (of DGAC and PCC)	0
6+524	6765	Auxiliary Vehicle	-	-	-			56	none	-	-	Average (of DGAC and PCC)	0
6+743	-								-	-	-	-	-
0+000	-								-	-	-	-	0
Telstar Ave WB		Traffic direction:	In entry direction										
4+911	*6165*	*Total*	-		*411*	-	-		*none*	-	-	*Average (of DGAC and PCC)*	*0*
4+911	6165	Automobiles	-		239	-		56	none	-	-	Average (of DGAC and PCC)	0
4+911	6165	Medium trucks	-		146	-		56	none	-	-	Average (of DGAC and PCC)	0
4+911	6165	Heavy trucks	-		20	-		56	none	-	-	Average (of DGAC and PCC)	0
4+911	6165	Buses	-		3	-		56	none	-	-	Average (of DGAC and PCC)	0
4+911	6165	Motorcycles	-		3	-		56	none	-	-	Average (of DGAC and PCC)	0
4+911	6165	Auxiliary Vehicle	-	-	-			56	none	-	-	Average (of DGAC and PCC)	0
5+047	*6165*	*Total*	-		*411*	-	-		*none*	-	-	*Average (of DGAC and PCC)*	*0*
5+047	6165	Automobiles	-		239	-		56	none	-	-	Average (of DGAC and PCC)	0
5+047	6165	Medium trucks	-		146	-		56	none	-	-	Average (of DGAC and PCC)	0
5+047	6165	Heavy trucks	-		20	-		56	none	-	-	Average (of DGAC and PCC)	0
5+047	6165	Buses	-		3	-		56	none	-	-	Average (of DGAC and PCC)	0

5+047	6165	Motorcycles	-		3	-		56	none	-	-	Average (of DGAC and PCC)	0
5+047	6165	Auxiliary Vehicle	-	-	-			56	none	-	-	Average (of DGAC and PCC)	0
5+190	*6165*	*Total*	-		*411*	-	-		*none*	-	-	*Average (of DGAC and PCC)*	*0*
5+190	6165	Automobiles	-		239	-		56	none	-	-	Average (of DGAC and PCC)	0
5+190	6165	Medium trucks	-		146	-		56	none	-	-	Average (of DGAC and PCC)	0
5+190	6165	Heavy trucks	-		20	-		56	none	-	-	Average (of DGAC and PCC)	0
5+190	6165	Buses	-		3	-		56	none	-	-	Average (of DGAC and PCC)	0
5+190	6165	Motorcycles	-		3	-		56	none	-	-	Average (of DGAC and PCC)	0
5+190	6165	Auxiliary Vehicle	-	-	-			56	none	-	-	Average (of DGAC and PCC)	0
5+492	*7980*	*Total*	-		*532*	-	-		*none*	-	-	*Average (of DGAC and PCC)*	*0*
5+492	7980	Automobiles	-		310	-		56	none	-	-	Average (of DGAC and PCC)	0
5+492	7980	Medium trucks	-		189	-		56	none	-	-	Average (of DGAC and PCC)	0
5+492	7980	Heavy trucks	-		25	-		56	none	-	-	Average (of DGAC and PCC)	0
5+492	7980	Buses	-		4	-		56	none	-	-	Average (of DGAC and PCC)	0
5+492	7980	Motorcycles	-		4	-		56	none	-	-	Average (of DGAC and PCC)	0
5+492	7980	Auxiliary Vehicle	-	-	-			56	none	-	-	Average (of DGAC and PCC)	0
5+670	*7980*	*Total*	-		*532*	-	-		*none*	-	-	*Average (of DGAC and PCC)*	*0*
5+670	7980	Automobiles	-		310	-		56	none	-	-	Average (of DGAC and PCC)	0
5+670	7980	Medium trucks	-		189	-		56	none	-	-	Average (of DGAC and PCC)	0
5+670	7980	Heavy trucks	-		25	-		56	none	-	-	Average (of DGAC and PCC)	0
5+670	7980	Buses	-		4	-		56	none	-	-	Average (of DGAC and PCC)	0
5+670	7980	Motorcycles	-		4	-		56	none	-	-	Average (of DGAC and PCC)	0
5+670	7980	Auxiliary Vehicle	-	-	-			56	none	-	-	Average (of DGAC and PCC)	0
5+986	*10500*	*Total*	-		*700*	-	-		*none*	-	-	*Average (of DGAC and PCC)*	*0*
5+986	10500	Automobiles	-		408	-		56	none	-	-	Average (of DGAC and PCC)	0
5+986	10500	Medium trucks	-		249	-		56	none	-	-	Average (of DGAC and PCC)	0
5+986	10500	Heavy trucks	-		33	-		56	none	-	-	Average (of DGAC and PCC)	0
5+986	10500	Buses	-		5	-		56	none	-	-	Average (of DGAC and PCC)	0
5+986	10500	Motorcycles	-		5	-		56	none	-	-	Average (of DGAC and PCC)	0
5+986	10500	Auxiliary Vehicle	-	-	-			56	none	-	-	Average (of DGAC and PCC)	0
6+475	*20685*	*Total*	-		*1379*	-	-		*none*	-	-	*Average (of DGAC and PCC)*	*0*
6+475	20685	Automobiles	-		804	-		56	none	-	-	Average (of DGAC and PCC)	0
6+475	20685	Medium trucks	-		491	-		56	none	-	-	Average (of DGAC and PCC)	0
6+475	20685	Heavy trucks	-		65	-		56	none	-	-	Average (of DGAC and PCC)	0
6+475	20685	Buses	-		10	-		56	none	-	-	Average (of DGAC and PCC)	0
6+475	20685	Motorcycles	-		9	-		56	none	-	-	Average (of DGAC and PCC)	0
6+475	20685	Auxiliary Vehicle	-	-	-			56	none	-	-	Average (of DGAC and PCC)	0
6+596	*20685*	*Total*	-		*1379*	-	-		*none*	-	-	*Average (of DGAC and PCC)*	*0*
6+596	20685	Automobiles	-		804	-		56	none	-	-	Average (of DGAC and PCC)	0
6+596	20685	Medium trucks	-		491	-		56	none	-	-	Average (of DGAC and PCC)	0
6+596	20685	Heavy trucks	-		65	-		56	none	-	-	Average (of DGAC and PCC)	0
6+596	20685	Buses	-		10	-		56	none	-	-	Average (of DGAC and PCC)	0
6+596	20685	Motorcycles	-		9	-		56	none	-	-	Average (of DGAC and PCC)	0
6+596	20685	Auxiliary Vehicle	-	-	-			56	none	-	-	Average (of DGAC and PCC)	0
6+734	-								-	-	-	-	-
0+000	*20685*	*Total*	-		*1379*	-	-		*none*	-	-	*Average (of DGAC and PCC)*	*0*
0+000	20685	Automobiles	-		804	-		56	none	-	-	Average (of DGAC and PCC)	0
0+000	20685	Medium trucks	-		491	-		56	none	-	-	Average (of DGAC and PCC)	0
0+000	20685	Heavy trucks	-		65	-		56	none	-	-	Average (of DGAC and PCC)	0
0+000	20685	Buses	-		10	-		56	none	-	-	Average (of DGAC and PCC)	0
0+000	20685	Motorcycles	-		9	-		56	none	-	-	Average (of DGAC and PCC)	0
0+000	20685	Auxiliary Vehicle	-	-	-			56	none	-	-	Average (of DGAC and PCC)	0
Aerojet Ave SB	Traffic direction:	In entry direction											
5+492	*11040*	*Total*	-		*736*	-	-		*none*	-	-	*Average (of DGAC and PCC)*	*0*
5+492	11040	Automobiles	-		429	-		40	none	-	-	Average (of DGAC and PCC)	0
5+492	11040	Medium trucks	-		262	-		40	none	-	-	Average (of DGAC and PCC)	0
5+492	11040	Heavy trucks	-		35	-		40	none	-	-	Average (of DGAC and PCC)	0
5+492	11040	Buses	-		5	-		40	none	-	-	Average (of DGAC and PCC)	0
5+492	11040	Motorcycles	-		5	-		40	none	-	-	Average (of DGAC and PCC)	0
5+492	11040	Auxiliary Vehicle	-	-	-			40	none	-	-	Average (of DGAC and PCC)	0
5+900	-								-	-	-	-	-
0+000	*2115*	*Total*	-		*141*	-	-		*none*	-	-	*Average (of DGAC and PCC)*	*0*

0+000	2115	Automobiles	-	82	-	40	none	-	-	Average (of DGAC and PCC)		0
0+000	2115	Medium trucks	-	50	-	40	none	-	-	Average (of DGAC and PCC)		0
0+000	2115	Heavy trucks	-	7	-	40	none	-	-	Average (of DGAC and PCC)		0
0+000	2115	Buses	-	1	-	40	none	-	-	Average (of DGAC and PCC)		0
0+000	2115	Motorcycles	-	1	-	40	none	-	-	Average (of DGAC and PCC)		0
0+000	2115	Auxiliary Vehicle	-	-	-	40	none	-	-	Average (of DGAC and PCC)		0
Aerojet Ave NB	Traffic direction:	In entry direction										
5+900	*11805*	*Total*	-	*787*	-	-	*none*	-	-	*Average (of DGAC and PCC)*		*0*
5+900	11805	Automobiles	-	459	-	40	none	-	-	Average (of DGAC and PCC)		0
5+900	11805	Medium trucks	-	280	-	40	none	-	-	Average (of DGAC and PCC)		0
5+900	11805	Heavy trucks	-	37	-	40	none	-	-	Average (of DGAC and PCC)		0
5+900	11805	Buses	-	6	-	40	none	-	-	Average (of DGAC and PCC)		0
5+900	11805	Motorcycles	-	5	-	40	none	-	-	Average (of DGAC and PCC)		0
5+900	11805	Auxiliary Vehicle	-	-	-	40	none	-	-	Average (of DGAC and PCC)		0
6+310	-						-	-	-	-	-	
0+000	*16965*	*Total*	-	*1131*	-	-	*none*	-	-	*Average (of DGAC and PCC)*		*0*
0+000	16965	Automobiles	-	660	-	40	none	-	-	Average (of DGAC and PCC)		0
0+000	16965	Medium trucks	-	403	-	40	none	-	-	Average (of DGAC and PCC)		0
0+000	16965	Heavy trucks	-	53	-	40	none	-	-	Average (of DGAC and PCC)		0
0+000	16965	Buses	-	8	-	40	none	-	-	Average (of DGAC and PCC)		0
0+000	16965	Motorcycles	-	7	-	40	none	-	-	Average (of DGAC and PCC)		0
0+000	16965	Auxiliary Vehicle	-	-	-	40	none	-	-	Average (of DGAC and PCC)		0
Rio Hondo Ave SB	Traffic direction:	In entry direction										
5+900	*2805*	*Total*	-	*187*	-	-	*none*	-	-	*Average (of DGAC and PCC)*		*0*
5+900	2805	Automobiles	-	108	-	40	none	-	-	Average (of DGAC and PCC)		0
5+900	2805	Medium trucks	-	66	-	40	none	-	-	Average (of DGAC and PCC)		0
5+900	2805	Heavy trucks	-	9	-	40	none	-	-	Average (of DGAC and PCC)		0
5+900	2805	Buses	-	2	-	40	none	-	-	Average (of DGAC and PCC)		0
5+900	2805	Motorcycles	-	2	-	40	none	-	-	Average (of DGAC and PCC)		0
5+900	2805	Auxiliary Vehicle	-	-	-	40	none	-	-	Average (of DGAC and PCC)		0
6+326	-						-	-	-	-	-	
0+000	*570*	*Total*	-	*38*	-	-	*none*	-	-	*Average (of DGAC and PCC)*		*0*
0+000	570	Automobiles	-	21	-	40	none	-	-	Average (of DGAC and PCC)		0
0+000	570	Medium trucks	-	13	-	40	none	-	-	Average (of DGAC and PCC)		0
0+000	570	Heavy trucks	-	2	-	40	none	-	-	Average (of DGAC and PCC)		0
0+000	570	Buses	-	1	-	40	none	-	-	Average (of DGAC and PCC)		0
0+000	570	Motorcycles	-	1	-	40	none	-	-	Average (of DGAC and PCC)		0
0+000	570	Auxiliary Vehicle	-	-	-	40	none	-	-	Average (of DGAC and PCC)		0
Rio Hondo Ave NB	Traffic direction:	In entry direction										
5+900	*3030*	*Total*	-	*202*	-	-	*none*	-	-	*Average (of DGAC and PCC)*		*0*
5+900	3030	Automobiles	-	117	-	40	none	-	-	Average (of DGAC and PCC)		0
5+900	3030	Medium trucks	-	71	-	40	none	-	-	Average (of DGAC and PCC)		0
5+900	3030	Heavy trucks	-	10	-	40	none	-	-	Average (of DGAC and PCC)		0
5+900	3030	Buses	-	2	-	40	none	-	-	Average (of DGAC and PCC)		0
5+900	3030	Motorcycles	-	2	-	40	none	-	-	Average (of DGAC and PCC)		0
5+900	3030	Auxiliary Vehicle	-	-	-	40	none	-	-	Average (of DGAC and PCC)		0
6+319	-						-	-	-	-	-	
0+000	-						-	-	-	-		0
Fletcher Ave SB	Traffic direction:	In entry direction										
6+319	*1905*	*Total*	-	*127*	-	-	*none*	-	-	*Average (of DGAC and PCC)*		*0*
6+319	1905	Automobiles	-	74	-	40	none	-	-	Average (of DGAC and PCC)		0
6+319	1905	Medium trucks	-	45	-	40	none	-	-	Average (of DGAC and PCC)		0
6+319	1905	Heavy trucks	-	6	-	40	none	-	-	Average (of DGAC and PCC)		0
6+319	1905	Buses	-	1	-	40	none	-	-	Average (of DGAC and PCC)		0
6+319	1905	Motorcycles	-	1	-	40	none	-	-	Average (of DGAC and PCC)		0
6+319	1905	Auxiliary Vehicle	-	-	-	40	none	-	-	Average (of DGAC and PCC)		0
6+700	-						-	-	-	-	-	
0+000	*1080*	*Total*	-	*72*	-	-	*none*	-	-	*Average (of DGAC and PCC)*		*0*
0+000	1080	Automobiles	-	41	-	40	none	-	-	Average (of DGAC and PCC)		0
0+000	1080	Medium trucks	-	25	-	40	none	-	-	Average (of DGAC and PCC)		0
0+000	1080	Heavy trucks	-	4	-	40	none	-	-	Average (of DGAC and PCC)		0
0+000	1080	Buses	-	1	-	40	none	-	-	Average (of DGAC and PCC)		0

0+000		1080	Motorcycles	-		1	-		40	none	-	-	Average (of DGAC and PCC)		0
0+000		1080	Auxiliary Vehicle	-	-	-			40	none	-	-	Average (of DGAC and PCC)		0
Fletcher Ave NB	Traffic direction:	In entry direction													
6+319		*2160*	*Total*	-		*144*	-	-		*none*	-	-	*Average (of DGAC and PCC)*		*0*
6+319		2160	Automobiles	-		84	-		40	none	-	-	Average (of DGAC and PCC)		0
6+319		2160	Medium trucks	-		51	-		40	none	-	-	Average (of DGAC and PCC)		0
6+319		2160	Heavy trucks	-		7	-		40	none	-	-	Average (of DGAC and PCC)		0
6+319		2160	Buses	-		1	-		40	none	-	-	Average (of DGAC and PCC)		0
6+319		2160	Motorcycles	-		1	-		40	none	-	-	Average (of DGAC and PCC)		0
6+319		2160	Auxiliary Vehicle	-	-	-			40	none	-	-	Average (of DGAC and PCC)		0
6+694	-									-	-	-	-	-	
0+000	-									-	-	-	-		0
Flair Dr EB	Traffic direction:	In entry direction													
6+319		*11895*	*Total*	-		*793*	-	-		*none*	-	-	*Average (of DGAC and PCC)*		*0*
6+319		11895	Automobiles	-		462	-		40	none	-	-	Average (of DGAC and PCC)		0
6+319		11895	Medium trucks	-		283	-		40	none	-	-	Average (of DGAC and PCC)		0
6+319		11895	Heavy trucks	-		37	-		40	none	-	-	Average (of DGAC and PCC)		0
6+319		11895	Buses	-		6	-		40	none	-	-	Average (of DGAC and PCC)		0
6+319		11895	Motorcycles	-		5	-		40	none	-	-	Average (of DGAC and PCC)		0
6+319		11895	Auxiliary Vehicle	-	-	-			40	none	-	-	Average (of DGAC and PCC)		0
6+832		*8880*	*Total*	-		*592*	-	-		*none*	-	-	*Average (of DGAC and PCC)*		*0*
6+832		8880	Automobiles	-		345	-		40	none	-	-	Average (of DGAC and PCC)		0
6+832		8880	Medium trucks	-		211	-		40	none	-	-	Average (of DGAC and PCC)		0
6+832		8880	Heavy trucks	-		28	-		40	none	-	-	Average (of DGAC and PCC)		0
6+832		8880	Buses	-		4	-		40	none	-	-	Average (of DGAC and PCC)		0
6+832		8880	Motorcycles	-		4	-		40	none	-	-	Average (of DGAC and PCC)		0
6+832		8880	Auxiliary Vehicle	-	-	-			40	none	-	-	Average (of DGAC and PCC)		0
7+320		*9525*	*Total*	-		*635*	-	-		*none*	-	-	*Average (of DGAC and PCC)*		*0*
7+320		9525	Automobiles	-		370	-		40	none	-	-	Average (of DGAC and PCC)		0
7+320		9525	Medium trucks	-		226	-		40	none	-	-	Average (of DGAC and PCC)		0
7+320		9525	Heavy trucks	-		30	-		40	none	-	-	Average (of DGAC and PCC)		0
7+320		9525	Buses	-		5	-		40	none	-	-	Average (of DGAC and PCC)		0
7+320		9525	Motorcycles	-		4	-		40	none	-	-	Average (of DGAC and PCC)		0
7+320		9525	Auxiliary Vehicle	-	-	-			40	none	-	-	Average (of DGAC and PCC)		0
7+670		*12765*	*Total*	-		*851*	-	-		*none*	-	-	*Average (of DGAC and PCC)*		*0*
7+670		12765	Automobiles	-		496	-		40	none	-	-	Average (of DGAC and PCC)		0
7+670		12765	Medium trucks	-		303	-		40	none	-	-	Average (of DGAC and PCC)		0
7+670		12765	Heavy trucks	-		40	-		40	none	-	-	Average (of DGAC and PCC)		0
7+670		12765	Buses	-		6	-		40	none	-	-	Average (of DGAC and PCC)		0
7+670		12765	Motorcycles	-		6	-		40	none	-	-	Average (of DGAC and PCC)		0
7+670		12765	Auxiliary Vehicle	-	-	-			40	none	-	-	Average (of DGAC and PCC)		0
8+052	-									-	-	-	-	-	
0+000	-									-	-	-	-		0
Flair Dr WB	Traffic direction:	In entry direction													
6+319		*16665*	*Total*	-		*1111*	-	-		*none*	-	-	*Average (of DGAC and PCC)*		*0*
6+319		16665	Automobiles	-		648	-		40	none	-	-	Average (of DGAC and PCC)		0
6+319		16665	Medium trucks	-		396	-		40	none	-	-	Average (of DGAC and PCC)		0
6+319		16665	Heavy trucks	-		52	-		40	none	-	-	Average (of DGAC and PCC)		0
6+319		16665	Buses	-		8	-		40	none	-	-	Average (of DGAC and PCC)		0
6+319		16665	Motorcycles	-		7	-		40	none	-	-	Average (of DGAC and PCC)		0
6+319		16665	Auxiliary Vehicle	-	-	-			40	none	-	-	Average (of DGAC and PCC)		0
6+700		*8295*	*Total*	-		*553*	-	-		*none*	-	-	*Average (of DGAC and PCC)*		*0*
6+700		8295	Automobiles	-		322	-		40	none	-	-	Average (of DGAC and PCC)		0
6+700		8295	Medium trucks	-		197	-		40	none	-	-	Average (of DGAC and PCC)		0
6+700		8295	Heavy trucks	-		26	-		40	none	-	-	Average (of DGAC and PCC)		0
6+700		8295	Buses	-		4	-		40	none	-	-	Average (of DGAC and PCC)		0
6+700		8295	Motorcycles	-		4	-		40	none	-	-	Average (of DGAC and PCC)		0
6+700		8295	Auxiliary Vehicle	-	-	-			40	none	-	-	Average (of DGAC and PCC)		0
7+045		*8640*	*Total*	-		*576*	-	-		*none*	-	-	*Average (of DGAC and PCC)*		*0*
7+045		8640	Automobiles	-		336	-		40	none	-	-	Average (of DGAC and PCC)		0
7+045		8640	Medium trucks	-		205	-		40	none	-	-	Average (of DGAC and PCC)		0
7+045		8640	Heavy trucks	-		27	-		40	none	-	-	Average (of DGAC and PCC)		0

7+045	8640	Buses	-	4	-	40	none	-	-	Average (of DGAC and PCC)	0
7+045	8640	Motorcycles	-	4	-	40	none	-	-	Average (of DGAC and PCC)	0
7+045	8640	Auxiliary Vehicle	-	-	-	40	none	-	-	Average (of DGAC and PCC)	0
7+523	*9450*	*Total*	-	*630*	-	-	*none*	-	-	*Average (of DGAC and PCC)*	*0*
7+523	9450	Automobiles	-	367	-	40	none	-	-	Average (of DGAC and PCC)	0
7+523	9450	Medium trucks	-	224	-	40	none	-	-	Average (of DGAC and PCC)	0
7+523	9450	Heavy trucks	-	30	-	40	none	-	-	Average (of DGAC and PCC)	0
7+523	9450	Buses	-	5	-	40	none	-	-	Average (of DGAC and PCC)	0
7+523	9450	Motorcycles	-	4	-	40	none	-	-	Average (of DGAC and PCC)	0
7+523	9450	Auxiliary Vehicle	-	-	-	40	none	-	-	Average (of DGAC and PCC)	0
8+048	-						-	-	-	-	-
0+000	*5070*	*Total*	-	*338*	-	-	*none*	-	-	*Average (of DGAC and PCC)*	*0*
0+000	5070	Automobiles	-	196	-	40	none	-	-	Average (of DGAC and PCC)	0
0+000	5070	Medium trucks	-	120	-	40	none	-	-	Average (of DGAC and PCC)	0
0+000	5070	Heavy trucks	-	16	-	40	none	-	-	Average (of DGAC and PCC)	0
0+000	5070	Buses	-	3	-	40	none	-	-	Average (of DGAC and PCC)	0
0+000	5070	Motorcycles	-	3	-	40	none	-	-	Average (of DGAC and PCC)	0
0+000	5070	Auxiliary Vehicle	-	-	-	40	none	-	-	Average (of DGAC and PCC)	0
Baldwin Ave SB	Traffic direction:	In entry direction									
6+319	*25890*	*Total*	-	*1726*	-	-	*none*	-	-	*Average (of DGAC and PCC)*	*0*
6+319	25890	Automobiles	-	1007	-	56	none	-	-	Average (of DGAC and PCC)	0
6+319	25890	Medium trucks	-	615	-	56	none	-	-	Average (of DGAC and PCC)	0
6+319	25890	Heavy trucks	-	81	-	56	none	-	-	Average (of DGAC and PCC)	0
6+319	25890	Buses	-	12	-	56	none	-	-	Average (of DGAC and PCC)	0
6+319	25890	Motorcycles	-	11	-	56	none	-	-	Average (of DGAC and PCC)	0
6+319	25890	Auxiliary Vehicle	-	-	-	56	none	-	-	Average (of DGAC and PCC)	0
6+847	*25890*	*Total*	-	*1726*	-	-	*Traffic light*	*0*	-	*Average (of DGAC and PCC)*	*0*
6+847	25890	Automobiles	-	1007	-	56	Traffic light	0	-	Average (of DGAC and PCC)	0
6+847	25890	Medium trucks	-	615	-	56	Traffic light	0	-	Average (of DGAC and PCC)	0
6+847	25890	Heavy trucks	-	81	-	56	Traffic light	0	-	Average (of DGAC and PCC)	0
6+847	25890	Buses	-	12	-	56	Traffic light	0	-	Average (of DGAC and PCC)	0
6+847	25890	Motorcycles	-	11	-	56	Traffic light	0	-	Average (of DGAC and PCC)	0
6+847	25890	Auxiliary Vehicle	-	-	-	56	Traffic light	0	-	Average (of DGAC and PCC)	0
7+957	*25890*	*Total*	-	*1726*	-	-	*none*	-	-	*Average (of DGAC and PCC)*	*0*
7+957	25890	Automobiles	-	1007	-	56	none	-	-	Average (of DGAC and PCC)	0
7+957	25890	Medium trucks	-	615	-	56	none	-	-	Average (of DGAC and PCC)	0
7+957	25890	Heavy trucks	-	81	-	56	none	-	-	Average (of DGAC and PCC)	0
7+957	25890	Buses	-	12	-	56	none	-	-	Average (of DGAC and PCC)	0
7+957	25890	Motorcycles	-	11	-	56	none	-	-	Average (of DGAC and PCC)	0
7+957	25890	Auxiliary Vehicle	-	-	-	56	none	-	-	Average (of DGAC and PCC)	0
8+011	*25890*	*Total*	-	*1726*	-	-	*none*	-	-	*Average (of DGAC and PCC)*	*0*
8+011	25890	Automobiles	-	1007	-	56	none	-	-	Average (of DGAC and PCC)	0
8+011	25890	Medium trucks	-	615	-	56	none	-	-	Average (of DGAC and PCC)	0
8+011	25890	Heavy trucks	-	81	-	56	none	-	-	Average (of DGAC and PCC)	0
8+011	25890	Buses	-	12	-	56	none	-	-	Average (of DGAC and PCC)	0
8+011	25890	Motorcycles	-	11	-	56	none	-	-	Average (of DGAC and PCC)	0
8+011	25890	Auxiliary Vehicle	-	-	-	56	none	-	-	Average (of DGAC and PCC)	0
8+175	*33285*	*Total*	-	*2219*	-	-	*Traffic light*	*0*	-	*Average (of DGAC and PCC)*	*0*
8+175	33285	Automobiles	-	1295	-	56	Traffic light	0	-	Average (of DGAC and PCC)	0
8+175	33285	Medium trucks	-	791	-	56	Traffic light	0	-	Average (of DGAC and PCC)	0
8+175	33285	Heavy trucks	-	104	-	56	Traffic light	0	-	Average (of DGAC and PCC)	0
8+175	33285	Buses	-	15	-	56	Traffic light	0	-	Average (of DGAC and PCC)	0
8+175	33285	Motorcycles	-	14	-	56	Traffic light	0	-	Average (of DGAC and PCC)	0
8+175	33285	Auxiliary Vehicle	-	-	-	56	Traffic light	0	-	Average (of DGAC and PCC)	0
8+855	*33285*	*Total*	-	*2219*	-	-	*none*	-	-	*Average (of DGAC and PCC)*	*0*
8+855	33285	Automobiles	-	1295	-	56	none	-	-	Average (of DGAC and PCC)	0
8+855	33285	Medium trucks	-	791	-	56	none	-	-	Average (of DGAC and PCC)	0
8+855	33285	Heavy trucks	-	104	-	56	none	-	-	Average (of DGAC and PCC)	0
8+855	33285	Buses	-	15	-	56	none	-	-	Average (of DGAC and PCC)	0
8+855	33285	Motorcycles	-	14	-	56	none	-	-	Average (of DGAC and PCC)	0
8+855	33285	Auxiliary Vehicle	-	-	-	56	none	-	-	Average (of DGAC and PCC)	0
9+025	*33285*	*Total*	-	*2219*	-	-	*none*	-	-	*Average (of DGAC and PCC)*	*0*

9+025	33285	Automobiles	-	1295	-	56	none	-	-	Average (of DGAC and PCC)	0
9+025	33285	Medium trucks	-	791	-	56	none	-	-	Average (of DGAC and PCC)	0
9+025	33285	Heavy trucks	-	104	-	56	none	-	-	Average (of DGAC and PCC)	0
9+025	33285	Buses	-	15	-	56	none	-	-	Average (of DGAC and PCC)	0
9+025	33285	Motorcycles	-	14	-	56	none	-	-	Average (of DGAC and PCC)	0
9+025	33285	Auxiliary Vehicle	-	-	-	56	none	-	-	Average (of DGAC and PCC)	0
9+803	*34875*	*Total*	-	*2325*	-	-	*Traffic light*	*0*	-	*Average (of DGAC and PCC)*	*0*
9+803	34875	Automobiles	-	1357	-	56	Traffic light	0	-	Average (of DGAC and PCC)	0
9+803	34875	Medium trucks	-	828	-	56	Traffic light	0	-	Average (of DGAC and PCC)	0
9+803	34875	Heavy trucks	-	109	-	56	Traffic light	0	-	Average (of DGAC and PCC)	0
9+803	34875	Buses	-	16	-	56	Traffic light	0	-	Average (of DGAC and PCC)	0
9+803	34875	Motorcycles	-	15	-	56	Traffic light	0	-	Average (of DGAC and PCC)	0
9+803	34875	Auxiliary Vehicle	-	-	-	56	Traffic light	0	-	Average (of DGAC and PCC)	0
10+141	*34875*	*Total*	-	*2325*	-	-	*none*	-	-	*Average (of DGAC and PCC)*	*0*
10+141	34875	Automobiles	-	1357	-	56	none	-	-	Average (of DGAC and PCC)	0
10+141	34875	Medium trucks	-	828	-	56	none	-	-	Average (of DGAC and PCC)	0
10+141	34875	Heavy trucks	-	109	-	56	none	-	-	Average (of DGAC and PCC)	0
10+141	34875	Buses	-	16	-	56	none	-	-	Average (of DGAC and PCC)	0
10+141	34875	Motorcycles	-	15	-	56	none	-	-	Average (of DGAC and PCC)	0
10+141	34875	Auxiliary Vehicle	-	-	-	56	none	-	-	Average (of DGAC and PCC)	0
10+389	*41550*	*Total*	-	*2770*	-	-	*Traffic light*	*0*	-	*Average (of DGAC and PCC)*	*0*
10+389	41550	Automobiles	-	1616	-	56	Traffic light	0	-	Average (of DGAC and PCC)	0
10+389	41550	Medium trucks	-	987	-	56	Traffic light	0	-	Average (of DGAC and PCC)	0
10+389	41550	Heavy trucks	-	130	-	56	Traffic light	0	-	Average (of DGAC and PCC)	0
10+389	41550	Buses	-	19	-	56	Traffic light	0	-	Average (of DGAC and PCC)	0
10+389	41550	Motorcycles	-	18	-	56	Traffic light	0	-	Average (of DGAC and PCC)	0
10+389	41550	Auxiliary Vehicle	-	-	-	56	Traffic light	0	-	Average (of DGAC and PCC)	0
10+780	-						-	-	-	-	-
0+000	*33960*	*Total*	-	*2264*	-	-	*Traffic light*	*0*	-	*Average (of DGAC and PCC)*	*0*
0+000	33960	Automobiles	-	1322	-	56	Traffic light	0	-	Average (of DGAC and PCC)	0
0+000	33960	Medium trucks	-	807	-	56	Traffic light	0	-	Average (of DGAC and PCC)	0
0+000	33960	Heavy trucks	-	106	-	56	Traffic light	0	-	Average (of DGAC and PCC)	0
0+000	33960	Buses	-	15	-	56	Traffic light	0	-	Average (of DGAC and PCC)	0
0+000	33960	Motorcycles	-	14	-	56	Traffic light	0	-	Average (of DGAC and PCC)	0
0+000	33960	Auxiliary Vehicle	-	-	-	56	Traffic light	0	-	Average (of DGAC and PCC)	0
Baldwin Ave NB	Traffic direction:	In entry direction									
10+389	*41550*	*Total*	-	*2770*	-	-	*Traffic light*	*0*	-	*Average (of DGAC and PCC)*	*0*
10+389	41550	Automobiles	-	1616	-	56	Traffic light	0	-	Average (of DGAC and PCC)	0
10+389	41550	Medium trucks	-	987	-	56	Traffic light	0	-	Average (of DGAC and PCC)	0
10+389	41550	Heavy trucks	-	130	-	56	Traffic light	0	-	Average (of DGAC and PCC)	0
10+389	41550	Buses	-	19	-	56	Traffic light	0	-	Average (of DGAC and PCC)	0
10+389	41550	Motorcycles	-	18	-	56	Traffic light	0	-	Average (of DGAC and PCC)	0
10+389	41550	Auxiliary Vehicle	-	-	-	56	Traffic light	0	-	Average (of DGAC and PCC)	0
10+776	*33660*	*Total*	-	*2244*	-	-	*none*	-	-	*Average (of DGAC and PCC)*	*0*
10+776	33660	Automobiles	-	1310	-	40	none	-	-	Average (of DGAC and PCC)	0
10+776	33660	Medium trucks	-	800	-	40	none	-	-	Average (of DGAC and PCC)	0
10+776	33660	Heavy trucks	-	105	-	40	none	-	-	Average (of DGAC and PCC)	0
10+776	33660	Buses	-	15	-	40	none	-	-	Average (of DGAC and PCC)	0
10+776	33660	Motorcycles	-	14	-	40	none	-	-	Average (of DGAC and PCC)	0
10+776	33660	Auxiliary Vehicle	-	-	-	40	none	-	-	Average (of DGAC and PCC)	0
11+023	*33660*	*Total*	-	*2244*	-	-	*none*	-	-	*Average (of DGAC and PCC)*	*0*
11+023	33660	Automobiles	-	1310	-	56	none	-	-	Average (of DGAC and PCC)	0
11+023	33660	Medium trucks	-	800	-	56	none	-	-	Average (of DGAC and PCC)	0
11+023	33660	Heavy trucks	-	105	-	56	none	-	-	Average (of DGAC and PCC)	0
11+023	33660	Buses	-	15	-	56	none	-	-	Average (of DGAC and PCC)	0
11+023	33660	Motorcycles	-	14	-	56	none	-	-	Average (of DGAC and PCC)	0
11+023	33660	Auxiliary Vehicle	-	-	-	56	none	-	-	Average (of DGAC and PCC)	0
11+338	*32310*	*Total*	-	*2154*	-	-	*Traffic light*	*0*	-	*Average (of DGAC and PCC)*	*0*
11+338	32310	Automobiles	-	1257	-	56	Traffic light	0	-	Average (of DGAC and PCC)	0
11+338	32310	Medium trucks	-	767	-	56	Traffic light	0	-	Average (of DGAC and PCC)	0
11+338	32310	Heavy trucks	-	101	-	56	Traffic light	0	-	Average (of DGAC and PCC)	0
11+338	32310	Buses	-	15	-	56	Traffic light	0	-	Average (of DGAC and PCC)	0

11+338	32310	Motorcycles	-	14	-		56	Traffic light	0	-	Average (of DGAC and PCC)		0
11+338	32310	Auxiliary Vehicle	-	-	-		56	Traffic light	0	-	Average (of DGAC and PCC)		0
12+138	*32310*	*Total*	-	*2154*	-	-	*none*	-	-		*Average (of DGAC and PCC)*		*0*
12+138	32310	Automobiles	-	1257	-		56	none	-	-	Average (of DGAC and PCC)		0
12+138	32310	Medium trucks	-	767	-		56	none	-	-	Average (of DGAC and PCC)		0
12+138	32310	Heavy trucks	-	101	-		56	none	-	-	Average (of DGAC and PCC)		0
12+138	32310	Buses	-	15	-		56	none	-	-	Average (of DGAC and PCC)		0
12+138	32310	Motorcycles	-	14	-		56	none	-	-	Average (of DGAC and PCC)		0
12+138	32310	Auxiliary Vehicle	-	-	-		56	none	-	-	Average (of DGAC and PCC)		0
12+310	*32310*	*Total*	-	*2154*	-	-	*none*	-	-		*Average (of DGAC and PCC)*		*0*
12+310	32310	Automobiles	-	1257	-		56	none	-	-	Average (of DGAC and PCC)		0
12+310	32310	Medium trucks	-	767	-		56	none	-	-	Average (of DGAC and PCC)		0
12+310	32310	Heavy trucks	-	101	-		56	none	-	-	Average (of DGAC and PCC)		0
12+310	32310	Buses	-	15	-		56	none	-	-	Average (of DGAC and PCC)		0
12+310	32310	Motorcycles	-	14	-		56	none	-	-	Average (of DGAC and PCC)		0
12+310	32310	Auxiliary Vehicle	-	-	-		56	none	-	-	Average (of DGAC and PCC)		0
13+023	*36135*	*Total*	-	*2409*	-	-	*Traffic light*		*0*	-	*Average (of DGAC and PCC)*		*0*
13+023	36135	Automobiles	-	1406	-		56	Traffic light	0	-	Average (of DGAC and PCC)		0
13+023	36135	Medium trucks	-	859	-		56	Traffic light	0	-	Average (of DGAC and PCC)		0
13+023	36135	Heavy trucks	-	113	-		56	Traffic light	0	-	Average (of DGAC and PCC)		0
13+023	36135	Buses	-	16	-		56	Traffic light	0	-	Average (of DGAC and PCC)		0
13+023	36135	Motorcycles	-	15	-		56	Traffic light	0	-	Average (of DGAC and PCC)		0
13+023	36135	Auxiliary Vehicle	-	-	-		56	Traffic light	0	-	Average (of DGAC and PCC)		0
13+151	*36135*	*Total*	-	*2409*	-	-	*none*	-	-		*Average (of DGAC and PCC)*		*0*
13+151	36135	Automobiles	-	1406	-		56	none	-	-	Average (of DGAC and PCC)		0
13+151	36135	Medium trucks	-	859	-		56	none	-	-	Average (of DGAC and PCC)		0
13+151	36135	Heavy trucks	-	113	-		56	none	-	-	Average (of DGAC and PCC)		0
13+151	36135	Buses	-	16	-		56	none	-	-	Average (of DGAC and PCC)		0
13+151	36135	Motorcycles	-	15	-		56	none	-	-	Average (of DGAC and PCC)		0
13+151	36135	Auxiliary Vehicle	-	-	-		56	none	-	-	Average (of DGAC and PCC)		0
14+319	*28110*	*Total*	-	*1874*	-	-	*Traffic light*		*0*	-	*Average (of DGAC and PCC)*		*0*
14+319	28110	Automobiles	-	1093	-		56	Traffic light	0	-	Average (of DGAC and PCC)		0
14+319	28110	Medium trucks	-	668	-		56	Traffic light	0	-	Average (of DGAC and PCC)		0
14+319	28110	Heavy trucks	-	88	-		56	Traffic light	0	-	Average (of DGAC and PCC)		0
14+319	28110	Buses	-	13	-		56	Traffic light	0	-	Average (of DGAC and PCC)		0
14+319	28110	Motorcycles	-	12	-		56	Traffic light	0	-	Average (of DGAC and PCC)		0
14+319	28110	Auxiliary Vehicle	-	-	-		56	Traffic light	0	-	Average (of DGAC and PCC)		0
14+849	-						-		-	-	-	-	
0+000	*28110*	*Total*	-	*1874*	-	-	*none*	-	-		*Average (of DGAC and PCC)*		*0*
0+000	28110	Automobiles	-	1093	-		56	none	-	-	Average (of DGAC and PCC)		0
0+000	28110	Medium trucks	-	668	-		56	none	-	-	Average (of DGAC and PCC)		0
0+000	28110	Heavy trucks	-	88	-		56	none	-	-	Average (of DGAC and PCC)		0
0+000	28110	Buses	-	13	-		56	none	-	-	Average (of DGAC and PCC)		0
0+000	28110	Motorcycles	-	12	-		56	none	-	-	Average (of DGAC and PCC)		0
0+000	28110	Auxiliary Vehicle	-	-	-		56	none	-	-	Average (of DGAC and PCC)		0
Olive St EB	Traffic direction:	In entry direction											
8+855	*5115*	*Total*	-	*341*	-	-	*none*	-	-		*Average (of DGAC and PCC)*		*0*
8+855	5115	Automobiles	-	198	-		40	none	-	-	Average (of DGAC and PCC)		0
8+855	5115	Medium trucks	-	121	-		40	none	-	-	Average (of DGAC and PCC)		0
8+855	5115	Heavy trucks	-	16	-		40	none	-	-	Average (of DGAC and PCC)		0
8+855	5115	Buses	-	3	-		40	none	-	-	Average (of DGAC and PCC)		0
8+855	5115	Motorcycles	-	3	-		40	none	-	-	Average (of DGAC and PCC)		0
8+855	5115	Auxiliary Vehicle	-	-	-		40	none	-	-	Average (of DGAC and PCC)		0
9+518	*5115*	*Total*	-	*341*	-	-	*Traffic light*		*0*	-	*Average (of DGAC and PCC)*		*0*
9+518	5115	Automobiles	-	198	-		40	Traffic light	0	-	Average (of DGAC and PCC)		0
9+518	5115	Medium trucks	-	121	-		40	Traffic light	0	-	Average (of DGAC and PCC)		0
9+518	5115	Heavy trucks	-	16	-		40	Traffic light	0	-	Average (of DGAC and PCC)		0
9+518	5115	Buses	-	3	-		40	Traffic light	0	-	Average (of DGAC and PCC)		0
9+518	5115	Motorcycles	-	3	-		40	Traffic light	0	-	Average (of DGAC and PCC)		0
9+518	5115	Auxiliary Vehicle	-	-	-		40	Traffic light	0	-	Average (of DGAC and PCC)		0
10+058	-						-		-	-	-	-	
0+000	*5115*	*Total*	-	*341*	-	-	*none*	-	-		*Average (of DGAC and PCC)*		*0*

0+000	5115	Automobiles	-	198	-		40	none	-	-	Average (of DGAC and PCC)	0
0+000	5115	Medium trucks	-	121	-		40	none	-	-	Average (of DGAC and PCC)	0
0+000	5115	Heavy trucks	-	16	-		40	none	-	-	Average (of DGAC and PCC)	0
0+000	5115	Buses	-	3	-		40	none	-	-	Average (of DGAC and PCC)	0
0+000	5115	Motorcycles	-	3	-		40	none	-	-	Average (of DGAC and PCC)	0
0+000	5115	Auxiliary Vehicle	-	-	-		40	none	-	-	Average (of DGAC and PCC)	0
Olive St WB	Traffic direction:	In entry direction										
8+855	*4650*	*Total*	-	*310*	-	-		*none*	-	-	*Average (of DGAC and PCC)*	*0*
8+855	4650	Automobiles	-	180	-		40	none	-	-	Average (of DGAC and PCC)	0
8+855	4650	Medium trucks	-	110	-		40	none	-	-	Average (of DGAC and PCC)	0
8+855	4650	Heavy trucks	-	15	-		40	none	-	-	Average (of DGAC and PCC)	0
8+855	4650	Buses	-	3	-		40	none	-	-	Average (of DGAC and PCC)	0
8+855	4650	Motorcycles	-	2	-		40	none	-	-	Average (of DGAC and PCC)	0
8+855	4650	Auxiliary Vehicle	-	-	-		40	none	-	-	Average (of DGAC and PCC)	0
9+385	*4650*	*Total*	-	*310*	-	-		*Traffic light*	*0*	-	*Average (of DGAC and PCC)*	*0*
9+385	4650	Automobiles	-	180	-		40	Traffic light	0	-	Average (of DGAC and PCC)	0
9+385	4650	Medium trucks	-	110	-		40	Traffic light	0	-	Average (of DGAC and PCC)	0
9+385	4650	Heavy trucks	-	15	-		40	Traffic light	0	-	Average (of DGAC and PCC)	0
9+385	4650	Buses	-	3	-		40	Traffic light	0	-	Average (of DGAC and PCC)	0
9+385	4650	Motorcycles	-	2	-		40	Traffic light	0	-	Average (of DGAC and PCC)	0
9+385	4650	Auxiliary Vehicle	-	-	-		40	Traffic light	0	-	Average (of DGAC and PCC)	0
10+062	-							-	-	-	-	-
0+000	*4650*	*Total*	-	*310*	-	-		*none*	-	-	*Average (of DGAC and PCC)*	*0*
0+000	4650	Automobiles	-	180	-		40	none	-	-	Average (of DGAC and PCC)	0
0+000	4650	Medium trucks	-	110	-		40	none	-	-	Average (of DGAC and PCC)	0
0+000	4650	Heavy trucks	-	15	-		40	none	-	-	Average (of DGAC and PCC)	0
0+000	4650	Buses	-	3	-		40	none	-	-	Average (of DGAC and PCC)	0
0+000	4650	Motorcycles	-	2	-		40	none	-	-	Average (of DGAC and PCC)	0
0+000	4650	Auxiliary Vehicle	-	-	-		40	none	-	-	Average (of DGAC and PCC)	0
Lower Azusa Rd EB	Traffic direction:	In entry direction										
8+855	*23805*	*Total*	-	*1587*	-	-		*none*	-	-	*Average (of DGAC and PCC)*	*0*
8+855	23805	Automobiles	-	926	-		56	none	-	-	Average (of DGAC and PCC)	0
8+855	23805	Medium trucks	-	566	-		56	none	-	-	Average (of DGAC and PCC)	0
8+855	23805	Heavy trucks	-	74	-		56	none	-	-	Average (of DGAC and PCC)	0
8+855	23805	Buses	-	11	-		56	none	-	-	Average (of DGAC and PCC)	0
8+855	23805	Motorcycles	-	10	-		56	none	-	-	Average (of DGAC and PCC)	0
8+855	23805	Auxiliary Vehicle	-	-	-		56	none	-	-	Average (of DGAC and PCC)	0
8+995	*23805*	*Total*	-	*1587*	-	-		*Traffic light*	*0*	-	*Average (of DGAC and PCC)*	*0*
8+995	23805	Automobiles	-	926	-		56	Traffic light	0	-	Average (of DGAC and PCC)	0
8+995	23805	Medium trucks	-	566	-		56	Traffic light	0	-	Average (of DGAC and PCC)	0
8+995	23805	Heavy trucks	-	74	-		56	Traffic light	0	-	Average (of DGAC and PCC)	0
8+995	23805	Buses	-	11	-		56	Traffic light	0	-	Average (of DGAC and PCC)	0
8+995	23805	Motorcycles	-	10	-		56	Traffic light	0	-	Average (of DGAC and PCC)	0
8+995	23805	Auxiliary Vehicle	-	-	-		56	Traffic light	0	-	Average (of DGAC and PCC)	0
10+849	*37050*	*Total*	-	*2470*	-	-		*Traffic light*	*0*	-	*Average (of DGAC and PCC)*	*0*
10+849	37050	Automobiles	-	1441	-		56	Traffic light	0	-	Average (of DGAC and PCC)	0
10+849	37050	Medium trucks	-	880	-		56	Traffic light	0	-	Average (of DGAC and PCC)	0
10+849	37050	Heavy trucks	-	116	-		56	Traffic light	0	-	Average (of DGAC and PCC)	0
10+849	37050	Buses	-	17	-		56	Traffic light	0	-	Average (of DGAC and PCC)	0
10+849	37050	Motorcycles	-	16	-		56	Traffic light	0	-	Average (of DGAC and PCC)	0
10+849	37050	Auxiliary Vehicle	-	-	-		56	Traffic light	0	-	Average (of DGAC and PCC)	0
11+858	*37155*	*Total*	-	*2477*	-	-		*Traffic light*	*0*	-	*Average (of DGAC and PCC)*	*0*
11+858	37155	Automobiles	-	1445	-		56	Traffic light	0	-	Average (of DGAC and PCC)	0
11+858	37155	Medium trucks	-	883	-		56	Traffic light	0	-	Average (of DGAC and PCC)	0
11+858	37155	Heavy trucks	-	116	-		56	Traffic light	0	-	Average (of DGAC and PCC)	0
11+858	37155	Buses	-	17	-		56	Traffic light	0	-	Average (of DGAC and PCC)	0
11+858	37155	Motorcycles	-	16	-		56	Traffic light	0	-	Average (of DGAC and PCC)	0
11+858	37155	Auxiliary Vehicle	-	-	-		56	Traffic light	0	-	Average (of DGAC and PCC)	0
13+557	*37155*	*Total*	-	*2477*	-	-		*none*	-	-	*Average (of DGAC and PCC)*	*0*
13+557	37155	Automobiles	-	1445	-		56	none	-	-	Average (of DGAC and PCC)	0
13+557	37155	Medium trucks	-	883	-		56	none	-	-	Average (of DGAC and PCC)	0
13+557	37155	Heavy trucks	-	116	-		56	none	-	-	Average (of DGAC and PCC)	0

13+557	37155	Buses	-	17	-	56	none	-	-	Average (of DGAC and PCC)	0
13+557	37155	Motorcycles	-	16	-	56	none	-	-	Average (of DGAC and PCC)	0
13+557	37155	Auxiliary Vehicle	-	-	-	56	none	-	-	Average (of DGAC and PCC)	0
14+452	*35670*	*Total*	-	*2378*	-	-	*Traffic light*	*0*	-	*Average (of DGAC and PCC)*	*0*
14+452	35670	Automobiles	-	1388	-	56	Traffic light	0	-	Average (of DGAC and PCC)	0
14+452	35670	Medium trucks	-	848	-	56	Traffic light	0	-	Average (of DGAC and PCC)	0
14+452	35670	Heavy trucks	-	111	-	56	Traffic light	0	-	Average (of DGAC and PCC)	0
14+452	35670	Buses	-	16	-	56	Traffic light	0	-	Average (of DGAC and PCC)	0
14+452	35670	Motorcycles	-	15	-	56	Traffic light	0	-	Average (of DGAC and PCC)	0
14+452	35670	Auxiliary Vehicle	-	-	-	56	Traffic light	0	-	Average (of DGAC and PCC)	0
15+825	*33915*	*Total*	-	*2261*	-	-	*Traffic light*	*0*	-	*Average (of DGAC and PCC)*	*0*
15+825	33915	Automobiles	-	1320	-	56	Traffic light	0	-	Average (of DGAC and PCC)	0
15+825	33915	Medium trucks	-	806	-	56	Traffic light	0	-	Average (of DGAC and PCC)	0
15+825	33915	Heavy trucks	-	106	-	56	Traffic light	0	-	Average (of DGAC and PCC)	0
15+825	33915	Buses	-	15	-	56	Traffic light	0	-	Average (of DGAC and PCC)	0
15+825	33915	Motorcycles	-	14	-	56	Traffic light	0	-	Average (of DGAC and PCC)	0
15+825	33915	Auxiliary Vehicle	-	-	-	56	Traffic light	0	-	Average (of DGAC and PCC)	0
16+057	*33915*	*Total*	-	*2261*	-	-	*none*	-	-	*Average (of DGAC and PCC)*	*0*
16+057	33915	Automobiles	-	1320	-	56	none	-	-	Average (of DGAC and PCC)	0
16+057	33915	Medium trucks	-	806	-	56	none	-	-	Average (of DGAC and PCC)	0
16+057	33915	Heavy trucks	-	106	-	56	none	-	-	Average (of DGAC and PCC)	0
16+057	33915	Buses	-	15	-	56	none	-	-	Average (of DGAC and PCC)	0
16+057	33915	Motorcycles	-	14	-	56	none	-	-	Average (of DGAC and PCC)	0
16+057	33915	Auxiliary Vehicle	-	-	-	56	none	-	-	Average (of DGAC and PCC)	0
17+102	*33915*	*Total*	-	*2261*	-	-	*none*	-	-	*Average (of DGAC and PCC)*	*0*
17+102	33915	Automobiles	-	1320	-	56	none	-	-	Average (of DGAC and PCC)	0
17+102	33915	Medium trucks	-	806	-	56	none	-	-	Average (of DGAC and PCC)	0
17+102	33915	Heavy trucks	-	106	-	56	none	-	-	Average (of DGAC and PCC)	0
17+102	33915	Buses	-	15	-	56	none	-	-	Average (of DGAC and PCC)	0
17+102	33915	Motorcycles	-	14	-	56	none	-	-	Average (of DGAC and PCC)	0
17+102	33915	Auxiliary Vehicle	-	-	-	56	none	-	-	Average (of DGAC and PCC)	0
17+399	*39780*	*Total*	-	*2652*	-	-	*Traffic light*	*0*	-	*Average (of DGAC and PCC)*	*0*
17+399	39780	Automobiles	-	1548	-	56	Traffic light	0	-	Average (of DGAC and PCC)	0
17+399	39780	Medium trucks	-	945	-	56	Traffic light	0	-	Average (of DGAC and PCC)	0
17+399	39780	Heavy trucks	-	124	-	56	Traffic light	0	-	Average (of DGAC and PCC)	0
17+399	39780	Buses	-	18	-	56	Traffic light	0	-	Average (of DGAC and PCC)	0
17+399	39780	Motorcycles	-	17	-	56	Traffic light	0	-	Average (of DGAC and PCC)	0
17+399	39780	Auxiliary Vehicle	-	-	-	56	Traffic light	0	-	Average (of DGAC and PCC)	0
17+742	-						-	-	-	-	-
0+000	*39780*	*Total*	-	*2652*	-	-	*none*	-	-	*Average (of DGAC and PCC)*	*0*
0+000	39780	Automobiles	-	1548	-	56	none	-	-	Average (of DGAC and PCC)	0
0+000	39780	Medium trucks	-	945	-	56	none	-	-	Average (of DGAC and PCC)	0
0+000	39780	Heavy trucks	-	124	-	56	none	-	-	Average (of DGAC and PCC)	0
0+000	39780	Buses	-	18	-	56	none	-	-	Average (of DGAC and PCC)	0
0+000	39780	Motorcycles	-	17	-	56	none	-	-	Average (of DGAC and PCC)	0
0+000	39780	Auxiliary Vehicle	-	-	-	56	none	-	-	Average (of DGAC and PCC)	0
Lower Azusa Rd WB		Traffic direction:	In entry direction								
8+855	*36120*	*Total*	-	*2408*	-	-	*none*	-	-	*Average (of DGAC and PCC)*	*0*
8+855	36120	Automobiles	-	1347	-	56	none	-	-	Average (of DGAC and PCC)	0
8+855	36120	Medium trucks	-	922	-	56	none	-	-	Average (of DGAC and PCC)	0
8+855	36120	Heavy trucks	-	108	-	56	none	-	-	Average (of DGAC and PCC)	0
8+855	36120	Buses	-	16	-	56	none	-	-	Average (of DGAC and PCC)	0
8+855	36120	Motorcycles	-	15	-	56	none	-	-	Average (of DGAC and PCC)	0
8+855	36120	Auxiliary Vehicle	-	-	-	56	none	-	-	Average (of DGAC and PCC)	0
9+185	*34620*	*Total*	-	*2308*	-	-	*Traffic light*	*0*	-	*Average (of DGAC and PCC)*	*0*
9+185	34620	Automobiles	-	1347	-	56	Traffic light	0	-	Average (of DGAC and PCC)	0
9+185	34620	Medium trucks	-	822	-	56	Traffic light	0	-	Average (of DGAC and PCC)	0
9+185	34620	Heavy trucks	-	108	-	56	Traffic light	0	-	Average (of DGAC and PCC)	0
9+185	34620	Buses	-	16	-	56	Traffic light	0	-	Average (of DGAC and PCC)	0
9+185	34620	Motorcycles	-	15	-	56	Traffic light	0	-	Average (of DGAC and PCC)	0
9+185	34620	Auxiliary Vehicle	-	-	-	56	Traffic light	0	-	Average (of DGAC and PCC)	0
9+375	*34620*	*Total*	-	*2308*	-	-	*none*	-	-	*Average (of DGAC and PCC)*	*0*

9+375	34620	Automobiles	-	1347	-		56	none	-	-	Average (of DGAC and PCC)		0
9+375	34620	Medium trucks	-	822	-		56	none	-	-	Average (of DGAC and PCC)		0
9+375	34620	Heavy trucks	-	108	-		56	none	-	-	Average (of DGAC and PCC)		0
9+375	34620	Buses	-	16	-		56	none	-	-	Average (of DGAC and PCC)		0
9+375	34620	Motorcycles	-	15	-		56	none	-	-	Average (of DGAC and PCC)		0
9+375	34620	Auxiliary Vehicle	-	-	-		56	none	-	-	Average (of DGAC and PCC)		0
9+596	*34620*	*Total*	-	*2308*	-	-		*none*	-	-	*Average (of DGAC and PCC)*		*0*
9+596	34620	Automobiles	-	1347	-		56	none	-	-	Average (of DGAC and PCC)		0
9+596	34620	Medium trucks	-	822	-		56	none	-	-	Average (of DGAC and PCC)		0
9+596	34620	Heavy trucks	-	108	-		56	none	-	-	Average (of DGAC and PCC)		0
9+596	34620	Buses	-	16	-		56	none	-	-	Average (of DGAC and PCC)		0
9+596	34620	Motorcycles	-	15	-		56	none	-	-	Average (of DGAC and PCC)		0
9+596	34620	Auxiliary Vehicle	-	-	-		56	none	-	-	Average (of DGAC and PCC)		0
10+731	*35145*	*Total*	-	*2343*	-	-		*Traffic light*	*0*	-	*Average (of DGAC and PCC)*		*0*
10+731	35145	Automobiles	-	1367	-		56	Traffic light	0	-	Average (of DGAC and PCC)		0
10+731	35145	Medium trucks	-	835	-		56	Traffic light	0	-	Average (of DGAC and PCC)		0
10+731	35145	Heavy trucks	-	110	-		56	Traffic light	0	-	Average (of DGAC and PCC)		0
10+731	35145	Buses	-	16	-		56	Traffic light	0	-	Average (of DGAC and PCC)		0
10+731	35145	Motorcycles	-	15	-		56	Traffic light	0	-	Average (of DGAC and PCC)		0
10+731	35145	Auxiliary Vehicle	-	-	-		56	Traffic light	0	-	Average (of DGAC and PCC)		0
12+138	*31665*	*Total*	-	*2111*	-	-		*Traffic light*	*0*	-	*Average (of DGAC and PCC)*		*0*
12+138	31665	Automobiles	-	1232	-		56	Traffic light	0	-	Average (of DGAC and PCC)		0
12+138	31665	Medium trucks	-	753	-		56	Traffic light	0	-	Average (of DGAC and PCC)		0
12+138	31665	Heavy trucks	-	99	-		56	Traffic light	0	-	Average (of DGAC and PCC)		0
12+138	31665	Buses	-	14	-		56	Traffic light	0	-	Average (of DGAC and PCC)		0
12+138	31665	Motorcycles	-	13	-		56	Traffic light	0	-	Average (of DGAC and PCC)		0
12+138	31665	Auxiliary Vehicle	-	-	-		56	Traffic light	0	-	Average (of DGAC and PCC)		0
13+015	*31665*	*Total*	-	*2111*	-	-		*none*	-	-	*Average (of DGAC and PCC)*		*0*
13+015	31665	Automobiles	-	1232	-		56	none	-	-	Average (of DGAC and PCC)		0
13+015	31665	Medium trucks	-	753	-		56	none	-	-	Average (of DGAC and PCC)		0
13+015	31665	Heavy trucks	-	99	-		56	none	-	-	Average (of DGAC and PCC)		0
13+015	31665	Buses	-	14	-		56	none	-	-	Average (of DGAC and PCC)		0
13+015	31665	Motorcycles	-	13	-		56	none	-	-	Average (of DGAC and PCC)		0
13+015	31665	Auxiliary Vehicle	-	-	-		56	none	-	-	Average (of DGAC and PCC)		0
14+695	*36195*	*Total*	-	*2413*	-	-		*Traffic light*	*0*	-	*Average (of DGAC and PCC)*		*0*
14+695	36195	Automobiles	-	1409	-		56	Traffic light	0	-	Average (of DGAC and PCC)		0
14+695	36195	Medium trucks	-	860	-		56	Traffic light	0	-	Average (of DGAC and PCC)		0
14+695	36195	Heavy trucks	-	113	-		56	Traffic light	0	-	Average (of DGAC and PCC)		0
14+695	36195	Buses	-	16	-		56	Traffic light	0	-	Average (of DGAC and PCC)		0
14+695	36195	Motorcycles	-	15	-		56	Traffic light	0	-	Average (of DGAC and PCC)		0
14+695	36195	Auxiliary Vehicle	-	-	-		56	Traffic light	0	-	Average (of DGAC and PCC)		0
15+727	*26850*	*Total*	-	*1790*	-	-		*Traffic light*	*0*	-	*Average (of DGAC and PCC)*		*0*
15+727	26850	Automobiles	-	1044	-		56	Traffic light	0	-	Average (of DGAC and PCC)		0
15+727	26850	Medium trucks	-	638	-		56	Traffic light	0	-	Average (of DGAC and PCC)		0
15+727	26850	Heavy trucks	-	84	-		56	Traffic light	0	-	Average (of DGAC and PCC)		0
15+727	26850	Buses	-	12	-		56	Traffic light	0	-	Average (of DGAC and PCC)		0
15+727	26850	Motorcycles	-	12	-		56	Traffic light	0	-	Average (of DGAC and PCC)		0
15+727	26850	Auxiliary Vehicle	-	-	-		56	Traffic light	0	-	Average (of DGAC and PCC)		0
17+563	*735*	*Total*	-	*49*	-	-		*Traffic light*	*0*	-	*Average (of DGAC and PCC)*		*0*
17+563	735	Automobiles	-	27	-		56	Traffic light	0	-	Average (of DGAC and PCC)		0
17+563	735	Medium trucks	-	17	-		56	Traffic light	0	-	Average (of DGAC and PCC)		0
17+563	735	Heavy trucks	-	3	-		56	Traffic light	0	-	Average (of DGAC and PCC)		0
17+563	735	Buses	-	1	-		56	Traffic light	0	-	Average (of DGAC and PCC)		0
17+563	735	Motorcycles	-	1	-		56	Traffic light	0	-	Average (of DGAC and PCC)		0
17+563	735	Auxiliary Vehicle	-	-	-		56	Traffic light	0	-	Average (of DGAC and PCC)		0
17+718	-							-	-	-	-	-	
0+000	*735*	*Total*	-	*49*	-	-		*none*	-	-	*Average (of DGAC and PCC)*		*0*
0+000	735	Automobiles	-	27	-		56	none	-	-	Average (of DGAC and PCC)		0
0+000	735	Medium trucks	-	17	-		56	none	-	-	Average (of DGAC and PCC)		0
0+000	735	Heavy trucks	-	3	-		56	none	-	-	Average (of DGAC and PCC)		0
0+000	735	Buses	-	1	-		56	none	-	-	Average (of DGAC and PCC)		0
0+000	735	Motorcycles	-	1	-		56	none	-	-	Average (of DGAC and PCC)		0

0+000	735	Auxiliary Vehicle	-	-	-		56	none	-	-	Average (of DGAC and PCC)	0
Tyler Ave SB	Traffic direction:	In entry direction										
8+855	*44220*	*Total*	-		*2948*	-	-	*none*	-	-	*Average (of DGAC and PCC)*	*0*
8+855	44220	Automobiles	-		1720	-		40	none	-	-	Average (of DGAC and PCC)	0
8+855	44220	Medium trucks	-		1051	-		40	none	-	-	Average (of DGAC and PCC)	0
8+855	44220	Heavy trucks	-		138	-		40	none	-	-	Average (of DGAC and PCC)	0
8+855	44220	Buses	-		20	-		40	none	-	-	Average (of DGAC and PCC)	0
8+855	44220	Motorcycles	-		19	-		40	none	-	-	Average (of DGAC and PCC)	0
8+855	44220	Auxiliary Vehicle	-	-	-			40	none	-	-	Average (of DGAC and PCC)	0
9+080	*44220*	*Total*	-		*2948*	-	-	*none*	-	-	*Average (of DGAC and PCC)*	*0*
9+080	44220	Automobiles	-		1720	-		40	none	-	-	Average (of DGAC and PCC)	0
9+080	44220	Medium trucks	-		1051	-		40	none	-	-	Average (of DGAC and PCC)	0
9+080	44220	Heavy trucks	-		138	-		40	none	-	-	Average (of DGAC and PCC)	0
9+080	44220	Buses	-		20	-		40	none	-	-	Average (of DGAC and PCC)	0
9+080	44220	Motorcycles	-		19	-		40	none	-	-	Average (of DGAC and PCC)	0
9+080	44220	Auxiliary Vehicle	-	-	-			40	none	-	-	Average (of DGAC and PCC)	0
9+159	*44220*	*Total*	-		*2948*	-	-	*none*	-	-	*Average (of DGAC and PCC)*	*0*
9+159	44220	Automobiles	-		1720	-		40	none	-	-	Average (of DGAC and PCC)	0
9+159	44220	Medium trucks	-		1051	-		40	none	-	-	Average (of DGAC and PCC)	0
9+159	44220	Heavy trucks	-		138	-		40	none	-	-	Average (of DGAC and PCC)	0
9+159	44220	Buses	-		20	-		40	none	-	-	Average (of DGAC and PCC)	0
9+159	44220	Motorcycles	-		19	-		40	none	-	-	Average (of DGAC and PCC)	0
9+159	44220	Auxiliary Vehicle	-	-	-			40	none	-	-	Average (of DGAC and PCC)	0
9+219	*44220*	*Total*	-		*2948*	-	-	*none*	-	-	*Average (of DGAC and PCC)*	*0*
9+219	44220	Automobiles	-		1720	-		40	none	-	-	Average (of DGAC and PCC)	0
9+219	44220	Medium trucks	-		1051	-		40	none	-	-	Average (of DGAC and PCC)	0
9+219	44220	Heavy trucks	-		138	-		40	none	-	-	Average (of DGAC and PCC)	0
9+219	44220	Buses	-		20	-		40	none	-	-	Average (of DGAC and PCC)	0
9+219	44220	Motorcycles	-		19	-		40	none	-	-	Average (of DGAC and PCC)	0
9+219	44220	Auxiliary Vehicle	-	-	-			40	none	-	-	Average (of DGAC and PCC)	0
9+295	*44220*	*Total*	-		*2948*	-	-	*Traffic light*		*0*	- *Average (of DGAC and PCC)*	*0*
9+295	44220	Automobiles	-		1720	-		40	Traffic light		0	- Average (of DGAC and PCC)	0
9+295	44220	Medium trucks	-		1051	-		40	Traffic light		0	- Average (of DGAC and PCC)	0
9+295	44220	Heavy trucks	-		138	-		40	Traffic light		0	- Average (of DGAC and PCC)	0
9+295	44220	Buses	-		20	-		40	Traffic light		0	- Average (of DGAC and PCC)	0
9+295	44220	Motorcycles	-		19	-		40	Traffic light		0	- Average (of DGAC and PCC)	0
9+295	44220	Auxiliary Vehicle	-	-	-			40	Traffic light		0	- Average (of DGAC and PCC)	0
9+897	*44220*	*Total*	-		*2948*	-	-	*none*	-	-	*Average (of DGAC and PCC)*	*0*
9+897	44220	Automobiles	-		1720	-		40	none	-	-	Average (of DGAC and PCC)	0
9+897	44220	Medium trucks	-		1051	-		40	none	-	-	Average (of DGAC and PCC)	0
9+897	44220	Heavy trucks	-		138	-		40	none	-	-	Average (of DGAC and PCC)	0
9+897	44220	Buses	-		20	-		40	none	-	-	Average (of DGAC and PCC)	0
9+897	44220	Motorcycles	-		19	-		40	none	-	-	Average (of DGAC and PCC)	0
9+897	44220	Auxiliary Vehicle	-	-	-			40	none	-	-	Average (of DGAC and PCC)	0
9+989	*44220*	*Total*	-		*2948*	-	-	*none*	-	-	*Average (of DGAC and PCC)*	*0*
9+989	44220	Automobiles	-		1720	-		40	none	-	-	Average (of DGAC and PCC)	0
9+989	44220	Medium trucks	-		1051	-		40	none	-	-	Average (of DGAC and PCC)	0
9+989	44220	Heavy trucks	-		138	-		40	none	-	-	Average (of DGAC and PCC)	0
9+989	44220	Buses	-		20	-		40	none	-	-	Average (of DGAC and PCC)	0
9+989	44220	Motorcycles	-		19	-		40	none	-	-	Average (of DGAC and PCC)	0
9+989	44220	Auxiliary Vehicle	-	-	-			40	none	-	-	Average (of DGAC and PCC)	0
10+301	*44220*	*Total*	-		*2948*	-	-	*none*	-	-	*Average (of DGAC and PCC)*	*0*
10+301	44220	Automobiles	-		1720	-		40	none	-	-	Average (of DGAC and PCC)	0
10+301	44220	Medium trucks	-		1051	-		40	none	-	-	Average (of DGAC and PCC)	0
10+301	44220	Heavy trucks	-		138	-		40	none	-	-	Average (of DGAC and PCC)	0
10+301	44220	Buses	-		20	-		40	none	-	-	Average (of DGAC and PCC)	0
10+301	44220	Motorcycles	-		19	-		40	none	-	-	Average (of DGAC and PCC)	0
10+301	44220	Auxiliary Vehicle	-	-	-			40	none	-	-	Average (of DGAC and PCC)	0
10+443	*44220*	*Total*	-		*2948*	-	-	*none*	-	-	*Average (of DGAC and PCC)*	*0*
10+443	44220	Automobiles	-		1720	-		40	none	-	-	Average (of DGAC and PCC)	0
10+443	44220	Medium trucks	-		1051	-		40	none	-	-	Average (of DGAC and PCC)	0
10+443	44220	Heavy trucks	-		138	-		40	none	-	-	Average (of DGAC and PCC)	0

10+443	44220	Buses	-		20	-		40	none	-	-	Average (of DGAC and PCC)	0
10+443	44220	Motorcycles	-		19	-		40	none	-	-	Average (of DGAC and PCC)	0
10+443	44220	Auxiliary Vehicle	-	-	-			40	none	-	-	Average (of DGAC and PCC)	0
10+494	*44220*	*Total*	-		*2948*	-	-		*none*	-	-	*Average (of DGAC and PCC)*	*0*
10+494	44220	Automobiles	-		1720	-		40	none	-	-	Average (of DGAC and PCC)	0
10+494	44220	Medium trucks	-		1051	-		40	none	-	-	Average (of DGAC and PCC)	0
10+494	44220	Heavy trucks	-		138	-		40	none	-	-	Average (of DGAC and PCC)	0
10+494	44220	Buses	-		20	-		40	none	-	-	Average (of DGAC and PCC)	0
10+494	44220	Motorcycles	-		19	-		40	none	-	-	Average (of DGAC and PCC)	0
10+494	44220	Auxiliary Vehicle	-	-	-			40	none	-	-	Average (of DGAC and PCC)	0
10+960	*44220*	*Total*	-		*2948*	-	-		*none*	-	-	*Average (of DGAC and PCC)*	*0*
10+960	44220	Automobiles	-		1720	-		40	none	-	-	Average (of DGAC and PCC)	0
10+960	44220	Medium trucks	-		1051	-		40	none	-	-	Average (of DGAC and PCC)	0
10+960	44220	Heavy trucks	-		138	-		40	none	-	-	Average (of DGAC and PCC)	0
10+960	44220	Buses	-		20	-		40	none	-	-	Average (of DGAC and PCC)	0
10+960	44220	Motorcycles	-		19	-		40	none	-	-	Average (of DGAC and PCC)	0
10+960	44220	Auxiliary Vehicle	-	-	-			40	none	-	-	Average (of DGAC and PCC)	0
11+832	*15150*	*Total*	-		*1010*	-	-		*Traffic light*	*0*	-	*Average (of DGAC and PCC)*	*0*
11+832	15150	Automobiles	-		589	-		40	Traffic light	0	-	Average (of DGAC and PCC)	0
11+832	15150	Medium trucks	-		360	-		40	Traffic light	0	-	Average (of DGAC and PCC)	0
11+832	15150	Heavy trucks	-		47	-		40	Traffic light	0	-	Average (of DGAC and PCC)	0
11+832	15150	Buses	-		7	-		40	Traffic light	0	-	Average (of DGAC and PCC)	0
11+832	15150	Motorcycles	-		7	-		40	Traffic light	0	-	Average (of DGAC and PCC)	0
11+832	15150	Auxiliary Vehicle	-	-	-			40	Traffic light	0	-	Average (of DGAC and PCC)	0
12+140	*15150*	*Total*	-		*1010*	-	-		*none*	-	-	*Average (of DGAC and PCC)*	*0*
12+140	15150	Automobiles	-		589	-		40	none	-	-	Average (of DGAC and PCC)	0
12+140	15150	Medium trucks	-		360	-		40	none	-	-	Average (of DGAC and PCC)	0
12+140	15150	Heavy trucks	-		47	-		40	none	-	-	Average (of DGAC and PCC)	0
12+140	15150	Buses	-		7	-		40	none	-	-	Average (of DGAC and PCC)	0
12+140	15150	Motorcycles	-		7	-		40	none	-	-	Average (of DGAC and PCC)	0
12+140	15150	Auxiliary Vehicle	-	-	-			40	none	-	-	Average (of DGAC and PCC)	0
12+255	*14820*	*Total*	-		*988*	-	-		*Traffic light*	*0*	-	*Average (of DGAC and PCC)*	*0*
12+255	14820	Automobiles	-		576	-		40	Traffic light	0	-	Average (of DGAC and PCC)	0
12+255	14820	Medium trucks	-		352	-		40	Traffic light	0	-	Average (of DGAC and PCC)	0
12+255	14820	Heavy trucks	-		46	-		40	Traffic light	0	-	Average (of DGAC and PCC)	0
12+255	14820	Buses	-		7	-		40	Traffic light	0	-	Average (of DGAC and PCC)	0
12+255	14820	Motorcycles	-		7	-		40	Traffic light	0	-	Average (of DGAC and PCC)	0
12+255	14820	Auxiliary Vehicle	-	-	-			40	Traffic light	0	-	Average (of DGAC and PCC)	0
13+507	*27405*	*Total*	-		*1827*	-	-		*Traffic light*	*0*	-	*Average (of DGAC and PCC)*	*0*
13+507	27405	Automobiles	-		1065	-		40	Traffic light	0	-	Average (of DGAC and PCC)	0
13+507	27405	Medium trucks	-		651	-		40	Traffic light	0	-	Average (of DGAC and PCC)	0
13+507	27405	Heavy trucks	-		86	-		40	Traffic light	0	-	Average (of DGAC and PCC)	0
13+507	27405	Buses	-		13	-		40	Traffic light	0	-	Average (of DGAC and PCC)	0
13+507	27405	Motorcycles	-		12	-		40	Traffic light	0	-	Average (of DGAC and PCC)	0
13+507	27405	Auxiliary Vehicle	-	-	-			40	Traffic light	0	-	Average (of DGAC and PCC)	0
13+960	-								-	-	-	-	-
0+000	*27405*	*Total*	-		*1827*	-	-		*none*	-	-	*Average (of DGAC and PCC)*	*0*
0+000	27405	Automobiles	-		1065	-		40	none	-	-	Average (of DGAC and PCC)	0
0+000	27405	Medium trucks	-		651	-		40	none	-	-	Average (of DGAC and PCC)	0
0+000	27405	Heavy trucks	-		86	-		40	none	-	-	Average (of DGAC and PCC)	0
0+000	27405	Buses	-		13	-		40	none	-	-	Average (of DGAC and PCC)	0
0+000	27405	Motorcycles	-		12	-		40	none	-	-	Average (of DGAC and PCC)	0
0+000	27405	Auxiliary Vehicle	-	-	-			40	none	-	-	Average (of DGAC and PCC)	0
Tyler Ave NB	Traffic direction:	In entry direction											
8+855	*28410*	*Total*	-		*1894*	-	-		*none*	-	-	*Average (of DGAC and PCC)*	*0*
8+855	28410	Automobiles	-		1105	-		40	none	-	-	Average (of DGAC and PCC)	0
8+855	28410	Medium trucks	-		675	-		40	none	-	-	Average (of DGAC and PCC)	0
8+855	28410	Heavy trucks	-		89	-		40	none	-	-	Average (of DGAC and PCC)	0
8+855	28410	Buses	-		13	-		40	none	-	-	Average (of DGAC and PCC)	0
8+855	28410	Motorcycles	-		12	-		40	none	-	-	Average (of DGAC and PCC)	0
8+855	28410	Auxiliary Vehicle	-	-	-			40	none	-	-	Average (of DGAC and PCC)	0
9+289	*28410*	*Total*	-		*1894*	-	-		*Traffic light*	*0*	-	*Average (of DGAC and PCC)*	*0*

9+289	28410	Automobiles	-		1105	-		40	Traffic light	0	-	Average (of DGAC and PCC)	0
9+289	28410	Medium trucks	-		675	-		40	Traffic light	0	-	Average (of DGAC and PCC)	0
9+289	28410	Heavy trucks	-		89	-		40	Traffic light	0	-	Average (of DGAC and PCC)	0
9+289	28410	Buses	-		13	-		40	Traffic light	0	-	Average (of DGAC and PCC)	0
9+289	28410	Motorcycles	-		12	-		40	Traffic light	0	-	Average (of DGAC and PCC)	0
9+289	28410	Auxiliary Vehicle	-	-	-			40	Traffic light	0	-	Average (of DGAC and PCC)	0
10+554	*14280*	*Total*	-		*952*	-	-		*Traffic light*	*0*	-	*Average (of DGAC and PCC)*	*0*
10+554	14280	Automobiles	-		555	-		40	Traffic light	0	-	Average (of DGAC and PCC)	0
10+554	14280	Medium trucks	-		339	-		40	Traffic light	0	-	Average (of DGAC and PCC)	0
10+554	14280	Heavy trucks	-		45	-		40	Traffic light	0	-	Average (of DGAC and PCC)	0
10+554	14280	Buses	-		7	-		40	Traffic light	0	-	Average (of DGAC and PCC)	0
10+554	14280	Motorcycles	-		6	-		40	Traffic light	0	-	Average (of DGAC and PCC)	0
10+554	14280	Auxiliary Vehicle	-	-	-			40	Traffic light	0	-	Average (of DGAC and PCC)	0
10+667	*14280*	*Total*	-		*952*	-	-		*none*	-	-	*Average (of DGAC and PCC)*	*0*
10+667	14280	Automobiles	-		555	-		40	none	-	-	Average (of DGAC and PCC)	0
10+667	14280	Medium trucks	-		339	-		40	none	-	-	Average (of DGAC and PCC)	0
10+667	14280	Heavy trucks	-		45	-		40	none	-	-	Average (of DGAC and PCC)	0
10+667	14280	Buses	-		7	-		40	none	-	-	Average (of DGAC and PCC)	0
10+667	14280	Motorcycles	-		6	-		40	none	-	-	Average (of DGAC and PCC)	0
10+667	14280	Auxiliary Vehicle	-	-	-			40	none	-	-	Average (of DGAC and PCC)	0
10+952	*17670*	*Total*	-		*1178*	-	-		*Traffic light*	*0*	-	*Average (of DGAC and PCC)*	*0*
10+952	17670	Automobiles	-		687	-		40	Traffic light	0	-	Average (of DGAC and PCC)	0
10+952	17670	Medium trucks	-		420	-		40	Traffic light	0	-	Average (of DGAC and PCC)	0
10+952	17670	Heavy trucks	-		55	-		40	Traffic light	0	-	Average (of DGAC and PCC)	0
10+952	17670	Buses	-		8	-		40	Traffic light	0	-	Average (of DGAC and PCC)	0
10+952	17670	Motorcycles	-		8	-		40	Traffic light	0	-	Average (of DGAC and PCC)	0
10+952	17670	Auxiliary Vehicle	-	-	-			40	Traffic light	0	-	Average (of DGAC and PCC)	0
11+852	*17670*	*Total*	-		*1178*	-	-		*none*	-	-	*Average (of DGAC and PCC)*	*0*
11+852	17670	Automobiles	-		687	-		40	none	-	-	Average (of DGAC and PCC)	0
11+852	17670	Medium trucks	-		420	-		40	none	-	-	Average (of DGAC and PCC)	0
11+852	17670	Heavy trucks	-		55	-		40	none	-	-	Average (of DGAC and PCC)	0
11+852	17670	Buses	-		8	-		40	none	-	-	Average (of DGAC and PCC)	0
11+852	17670	Motorcycles	-		8	-		40	none	-	-	Average (of DGAC and PCC)	0
11+852	17670	Auxiliary Vehicle	-	-	-			40	none	-	-	Average (of DGAC and PCC)	0
12+309	*17670*	*Total*	-		*1178*	-	-		*none*	-	-	*Average (of DGAC and PCC)*	*0*
12+309	17670	Automobiles	-		687	-		40	none	-	-	Average (of DGAC and PCC)	0
12+309	17670	Medium trucks	-		420	-		40	none	-	-	Average (of DGAC and PCC)	0
12+309	17670	Heavy trucks	-		55	-		40	none	-	-	Average (of DGAC and PCC)	0
12+309	17670	Buses	-		8	-		40	none	-	-	Average (of DGAC and PCC)	0
12+309	17670	Motorcycles	-		8	-		40	none	-	-	Average (of DGAC and PCC)	0
12+309	17670	Auxiliary Vehicle	-	-	-			40	none	-	-	Average (of DGAC and PCC)	0
12+363	*17670*	*Total*	-		*1178*	-	-		*none*	-	-	*Average (of DGAC and PCC)*	*0*
12+363	17670	Automobiles	-		687	-		40	none	-	-	Average (of DGAC and PCC)	0
12+363	17670	Medium trucks	-		420	-		40	none	-	-	Average (of DGAC and PCC)	0
12+363	17670	Heavy trucks	-		55	-		40	none	-	-	Average (of DGAC and PCC)	0
12+363	17670	Buses	-		8	-		40	none	-	-	Average (of DGAC and PCC)	0
12+363	17670	Motorcycles	-		8	-		40	none	-	-	Average (of DGAC and PCC)	0
12+363	17670	Auxiliary Vehicle	-	-	-			40	none	-	-	Average (of DGAC and PCC)	0
12+649	*17670*	*Total*	-		*1178*	-	-		*none*	-	-	*Average (of DGAC and PCC)*	*0*
12+649	17670	Automobiles	-		687	-		40	none	-	-	Average (of DGAC and PCC)	0
12+649	17670	Medium trucks	-		420	-		40	none	-	-	Average (of DGAC and PCC)	0
12+649	17670	Heavy trucks	-		55	-		40	none	-	-	Average (of DGAC and PCC)	0
12+649	17670	Buses	-		8	-		40	none	-	-	Average (of DGAC and PCC)	0
12+649	17670	Motorcycles	-		8	-		40	none	-	-	Average (of DGAC and PCC)	0
12+649	17670	Auxiliary Vehicle	-	-	-			40	none	-	-	Average (of DGAC and PCC)	0
12+807	*17670*	*Total*	-		*1178*	-	-		*none*	-	-	*Average (of DGAC and PCC)*	*0*
12+807	17670	Automobiles	-		687	-		40	none	-	-	Average (of DGAC and PCC)	0
12+807	17670	Medium trucks	-		420	-		40	none	-	-	Average (of DGAC and PCC)	0
12+807	17670	Heavy trucks	-		55	-		40	none	-	-	Average (of DGAC and PCC)	0
12+807	17670	Buses	-		8	-		40	none	-	-	Average (of DGAC and PCC)	0
12+807	17670	Motorcycles	-		8	-		40	none	-	-	Average (of DGAC and PCC)	0
12+807	17670	Auxiliary Vehicle	-	-	-			40	none	-	-	Average (of DGAC and PCC)	0

13+494	*47145*	*Total*	-	*3143*	-	-	*Traffic light*	*0*	-	*Average (of DGAC and PCC)*		*0*
13+494	47145	Automobiles	-	1835	-		40 Traffic light	0	-	Average (of DGAC and PCC)		0
13+494	47145	Medium trucks	-	1120	-		40 Traffic light	0	-	Average (of DGAC and PCC)		0
13+494	47145	Heavy trucks	-	147	-		40 Traffic light	0	-	Average (of DGAC and PCC)		0
13+494	47145	Buses	-	21	-		40 Traffic light	0	-	Average (of DGAC and PCC)		0
13+494	47145	Motorcycles	-	20	-		40 Traffic light	0	-	Average (of DGAC and PCC)		0
13+494	47145	Auxiliary Vehicle	-	-	-		40 Traffic light	0	-	Average (of DGAC and PCC)		0
13+584	*47145*	*Total*	-	*3143*	-	-	*none*	-	-	*Average (of DGAC and PCC)*		*0*
13+584	47145	Automobiles	-	1835	-		40 none	-	-	Average (of DGAC and PCC)		0
13+584	47145	Medium trucks	-	1120	-		40 none	-	-	Average (of DGAC and PCC)		0
13+584	47145	Heavy trucks	-	147	-		40 none	-	-	Average (of DGAC and PCC)		0
13+584	47145	Buses	-	21	-		40 none	-	-	Average (of DGAC and PCC)		0
13+584	47145	Motorcycles	-	20	-		40 none	-	-	Average (of DGAC and PCC)		0
13+584	47145	Auxiliary Vehicle	-	-	-		40 none	-	-	Average (of DGAC and PCC)		0
13+717	*47145*	*Total*	-	*3143*	-	-	*none*	-	-	*Average (of DGAC and PCC)*		*0*
13+717	47145	Automobiles	-	1835	-		40 none	-	-	Average (of DGAC and PCC)		0
13+717	47145	Medium trucks	-	1120	-		40 none	-	-	Average (of DGAC and PCC)		0
13+717	47145	Heavy trucks	-	147	-		40 none	-	-	Average (of DGAC and PCC)		0
13+717	47145	Buses	-	21	-		40 none	-	-	Average (of DGAC and PCC)		0
13+717	47145	Motorcycles	-	20	-		40 none	-	-	Average (of DGAC and PCC)		0
13+717	47145	Auxiliary Vehicle	-	-	-		40 none	-	-	Average (of DGAC and PCC)		0
13+960	-						-	-	-	-	-	
0+000	*47145*	*Total*	-	*3143*	-	-	*none*	-	-	*Average (of DGAC and PCC)*		*0*
0+000	47145	Automobiles	-	1835	-		40 none	-	-	Average (of DGAC and PCC)		0
0+000	47145	Medium trucks	-	1120	-		40 none	-	-	Average (of DGAC and PCC)		0
0+000	47145	Heavy trucks	-	147	-		40 none	-	-	Average (of DGAC and PCC)		0
0+000	47145	Buses	-	21	-		40 none	-	-	Average (of DGAC and PCC)		0
0+000	47145	Motorcycles	-	20	-		40 none	-	-	Average (of DGAC and PCC)		0
0+000	47145	Auxiliary Vehicle	-	-	-		40 none	-	-	Average (of DGAC and PCC)		0
Loftus Dr EB	Traffic direction:	In entry direction										
9+289	*10605*	*Total*	-	*707*	-	-	*Traffic light*	*0*	-	*Average (of DGAC and PCC)*		*0*
9+289	10605	Automobiles	-	412	-		56 Traffic light	0	-	Average (of DGAC and PCC)		0
9+289	10605	Medium trucks	-	252	-		56 Traffic light	0	-	Average (of DGAC and PCC)		0
9+289	10605	Heavy trucks	-	33	-		56 Traffic light	0	-	Average (of DGAC and PCC)		0
9+289	10605	Buses	-	5	-		56 Traffic light	0	-	Average (of DGAC and PCC)		0
9+289	10605	Motorcycles	-	5	-		56 Traffic light	0	-	Average (of DGAC and PCC)		0
9+289	10605	Auxiliary Vehicle	-	-	-		56 Traffic light	0	-	Average (of DGAC and PCC)		0
9+811	*7320*	*Total*	-	*488*	-	-	*Traffic light*	*0*	-	*Average (of DGAC and PCC)*		*0*
9+811	7320	Automobiles	-	284	-		56 Traffic light	0	-	Average (of DGAC and PCC)		0
9+811	7320	Medium trucks	-	174	-		56 Traffic light	0	-	Average (of DGAC and PCC)		0
9+811	7320	Heavy trucks	-	23	-		56 Traffic light	0	-	Average (of DGAC and PCC)		0
9+811	7320	Buses	-	4	-		56 Traffic light	0	-	Average (of DGAC and PCC)		0
9+811	7320	Motorcycles	-	3	-		56 Traffic light	0	-	Average (of DGAC and PCC)		0
9+811	7320	Auxiliary Vehicle	-	-	-		56 Traffic light	0	-	Average (of DGAC and PCC)		0
10+045	-						-	-	-	-	-	
0+000	*7320*	*Total*	-	*488*	-	-	*none*	-	-	*Average (of DGAC and PCC)*		*0*
0+000	7320	Automobiles	-	284	-		56 none	-	-	Average (of DGAC and PCC)		0
0+000	7320	Medium trucks	-	174	-		56 none	-	-	Average (of DGAC and PCC)		0
0+000	7320	Heavy trucks	-	23	-		56 none	-	-	Average (of DGAC and PCC)		0
0+000	7320	Buses	-	4	-		56 none	-	-	Average (of DGAC and PCC)		0
0+000	7320	Motorcycles	-	3	-		56 none	-	-	Average (of DGAC and PCC)		0
0+000	7320	Auxiliary Vehicle	-	-	-		56 none	-	-	Average (of DGAC and PCC)		0
Loftus Dr WB	Traffic direction:	In entry direction										
9+289	*18900*	*Total*	-	*1260*	-	-	*none*	-	-	*Average (of DGAC and PCC)*		*0*
9+289	18900	Automobiles	-	735	-		56 none	-	-	Average (of DGAC and PCC)		0
9+289	18900	Medium trucks	-	449	-		56 none	-	-	Average (of DGAC and PCC)		0
9+289	18900	Heavy trucks	-	59	-		56 none	-	-	Average (of DGAC and PCC)		0
9+289	18900	Buses	-	9	-		56 none	-	-	Average (of DGAC and PCC)		0
9+289	18900	Motorcycles	-	8	-		56 none	-	-	Average (of DGAC and PCC)		0
9+289	18900	Auxiliary Vehicle	-	-	-		56 none	-	-	Average (of DGAC and PCC)		0
9+503	*18900*	*Total*	-	*1260*	-	-	*Traffic light*	*0*	-	*Average (of DGAC and PCC)*		*0*
9+503	18900	Automobiles	-	735	-		56 Traffic light	0	-	Average (of DGAC and PCC)		0

9+503	18900	Medium trucks	-	449	-		56	Traffic light	0	-	Average (of DGAC and PCC)	0
9+503	18900	Heavy trucks	-	59	-		56	Traffic light	0	-	Average (of DGAC and PCC)	0
9+503	18900	Buses	-	9	-		56	Traffic light	0	-	Average (of DGAC and PCC)	0
9+503	18900	Motorcycles	-	8	-		56	Traffic light	0	-	Average (of DGAC and PCC)	0
9+503	18900	Auxiliary Vehicle	-	-	-		56	Traffic light	0	-	Average (of DGAC and PCC)	0
10+045	-						-		-	-	-	-
0+000	*18900*	*Total*	-	*1260*	-	-	*none*		-	-	*Average (of DGAC and PCC)*	*0*
0+000	18900	Automobiles	-	735	-		56	none	-	-	Average (of DGAC and PCC)	0
0+000	18900	Medium trucks	-	449	-		56	none	-	-	Average (of DGAC and PCC)	0
0+000	18900	Heavy trucks	-	59	-		56	none	-	-	Average (of DGAC and PCC)	0
0+000	18900	Buses	-	9	-		56	none	-	-	Average (of DGAC and PCC)	0
0+000	18900	Motorcycles	-	8	-		56	none	-	-	Average (of DGAC and PCC)	0
0+000	18900	Auxiliary Vehicle	-	-	-		56	none	-	-	Average (of DGAC and PCC)	0
Santa Anita Ave SB	Traffic direction:	In entry direction										
10+304	*44220*	*Total*	-	*2948*	-	-	*none*		-	-	*Average (of DGAC and PCC)*	*0*
10+304	44220	Automobiles	-	1720	-		56	none	-	-	Average (of DGAC and PCC)	0
10+304	44220	Medium trucks	-	1051	-		56	none	-	-	Average (of DGAC and PCC)	0
10+304	44220	Heavy trucks	-	138	-		56	none	-	-	Average (of DGAC and PCC)	0
10+304	44220	Buses	-	20	-		56	none	-	-	Average (of DGAC and PCC)	0
10+304	44220	Motorcycles	-	19	-		56	none	-	-	Average (of DGAC and PCC)	0
10+304	44220	Auxiliary Vehicle	-	-	-		56	none	-	-	Average (of DGAC and PCC)	0
10+458	*44220*	*Total*	-	*2948*	-	-	*none*		-	-	*Average (of DGAC and PCC)*	*0*
10+458	44220	Automobiles	-	1720	-		56	none	-	-	Average (of DGAC and PCC)	0
10+458	44220	Medium trucks	-	1051	-		56	none	-	-	Average (of DGAC and PCC)	0
10+458	44220	Heavy trucks	-	138	-		56	none	-	-	Average (of DGAC and PCC)	0
10+458	44220	Buses	-	20	-		56	none	-	-	Average (of DGAC and PCC)	0
10+458	44220	Motorcycles	-	19	-		56	none	-	-	Average (of DGAC and PCC)	0
10+458	44220	Auxiliary Vehicle	-	-	-		56	none	-	-	Average (of DGAC and PCC)	0
12+144	*41175*	*Total*	-	*2745*	-	-	*Traffic light*		*0*	-	*Average (of DGAC and PCC)*	*0*
12+144	41175	Automobiles	-	1602	-		56	Traffic light	0	-	Average (of DGAC and PCC)	0
12+144	41175	Medium trucks	-	979	-		56	Traffic light	0	-	Average (of DGAC and PCC)	0
12+144	41175	Heavy trucks	-	128	-		56	Traffic light	0	-	Average (of DGAC and PCC)	0
12+144	41175	Buses	-	19	-		56	Traffic light	0	-	Average (of DGAC and PCC)	0
12+144	41175	Motorcycles	-	17	-		56	Traffic light	0	-	Average (of DGAC and PCC)	0
12+144	41175	Auxiliary Vehicle	-	-	-		56	Traffic light	0	-	Average (of DGAC and PCC)	0
12+291	*41175*	*Total*	-	*2745*	-	-	*Traffic light*		*0*	-	*Average (of DGAC and PCC)*	*0*
12+291	41175	Automobiles	-	1602	-		56	Traffic light	0	-	Average (of DGAC and PCC)	0
12+291	41175	Medium trucks	-	979	-		56	Traffic light	0	-	Average (of DGAC and PCC)	0
12+291	41175	Heavy trucks	-	128	-		56	Traffic light	0	-	Average (of DGAC and PCC)	0
12+291	41175	Buses	-	19	-		56	Traffic light	0	-	Average (of DGAC and PCC)	0
12+291	41175	Motorcycles	-	17	-		56	Traffic light	0	-	Average (of DGAC and PCC)	0
12+291	41175	Auxiliary Vehicle	-	-	-		56	Traffic light	0	-	Average (of DGAC and PCC)	0
12+780	*50415*	*Total*	-	*3361*	-	-	*Traffic light*		*0*	-	*Average (of DGAC and PCC)*	*0*
12+780	50415	Automobiles	-	1962	-		56	Traffic light	0	-	Average (of DGAC and PCC)	0
12+780	50415	Medium trucks	-	1198	-		56	Traffic light	0	-	Average (of DGAC and PCC)	0
12+780	50415	Heavy trucks	-	157	-		56	Traffic light	0	-	Average (of DGAC and PCC)	0
12+780	50415	Buses	-	23	-		56	Traffic light	0	-	Average (of DGAC and PCC)	0
12+780	50415	Motorcycles	-	21	-		56	Traffic light	0	-	Average (of DGAC and PCC)	0
12+780	50415	Auxiliary Vehicle	-	-	-		56	Traffic light	0	-	Average (of DGAC and PCC)	0
14+018	*35340*	*Total*	-	*2356*	-	-	*Traffic light*		*0*	-	*Average (of DGAC and PCC)*	*0*
14+018	35340	Automobiles	-	1375	-		56	Traffic light	0	-	Average (of DGAC and PCC)	0
14+018	35340	Medium trucks	-	840	-		56	Traffic light	0	-	Average (of DGAC and PCC)	0
14+018	35340	Heavy trucks	-	110	-		56	Traffic light	0	-	Average (of DGAC and PCC)	0
14+018	35340	Buses	-	16	-		56	Traffic light	0	-	Average (of DGAC and PCC)	0
14+018	35340	Motorcycles	-	15	-		56	Traffic light	0	-	Average (of DGAC and PCC)	0
14+018	35340	Auxiliary Vehicle	-	-	-		56	Traffic light	0	-	Average (of DGAC and PCC)	0
14+188	*35340*	*Total*	-	*2356*	-	-	*none*		-	-	*Average (of DGAC and PCC)*	*0*
14+188	35340	Automobiles	-	1375	-		56	none	-	-	Average (of DGAC and PCC)	0
14+188	35340	Medium trucks	-	840	-		56	none	-	-	Average (of DGAC and PCC)	0
14+188	35340	Heavy trucks	-	110	-		56	none	-	-	Average (of DGAC and PCC)	0
14+188	35340	Buses	-	16	-		56	none	-	-	Average (of DGAC and PCC)	0
14+188	35340	Motorcycles	-	15	-		56	none	-	-	Average (of DGAC and PCC)	0

14+188	35340	Auxiliary Vehicle	-	-	-		56	none	-	-	Average (of DGAC and PCC)	0
14+491	-							-	-	-	-	-
Santa Anita Ave NB	Traffic direction:	In entry direction										
10+304	*40905*	*Total*	-		*2727*	-	-	*none*	-	-	*Average (of DGAC and PCC)*	*0*
10+304	40905	Automobiles	-		1592	-		56	none	-	-	Average (of DGAC and PCC)	0
10+304	40905	Medium trucks	-		972	-		56	none	-	-	Average (of DGAC and PCC)	0
10+304	40905	Heavy trucks	-		128	-		56	none	-	-	Average (of DGAC and PCC)	0
10+304	40905	Buses	-		18	-		56	none	-	-	Average (of DGAC and PCC)	0
10+304	40905	Motorcycles	-		17	-		56	none	-	-	Average (of DGAC and PCC)	0
10+304	40905	Auxiliary Vehicle	-	-	-			56	none	-	-	Average (of DGAC and PCC)	0
10+577	*40905*	*Total*	-		*2727*	-	-	*none*	-	-	*Average (of DGAC and PCC)*	*0*
10+577	40905	Automobiles	-		1592	-		56	none	-	-	Average (of DGAC and PCC)	0
10+577	40905	Medium trucks	-		972	-		56	none	-	-	Average (of DGAC and PCC)	0
10+577	40905	Heavy trucks	-		128	-		56	none	-	-	Average (of DGAC and PCC)	0
10+577	40905	Buses	-		18	-		56	none	-	-	Average (of DGAC and PCC)	0
10+577	40905	Motorcycles	-		17	-		56	none	-	-	Average (of DGAC and PCC)	0
10+577	40905	Auxiliary Vehicle	-	-	-			56	none	-	-	Average (of DGAC and PCC)	0
10+741	*40905*	*Total*	-		*2727*	-	-	*none*	-	-	*Average (of DGAC and PCC)*	*0*
10+741	40905	Automobiles	-		1592	-		56	none	-	-	Average (of DGAC and PCC)	0
10+741	40905	Medium trucks	-		972	-		56	none	-	-	Average (of DGAC and PCC)	0
10+741	40905	Heavy trucks	-		128	-		56	none	-	-	Average (of DGAC and PCC)	0
10+741	40905	Buses	-		18	-		56	none	-	-	Average (of DGAC and PCC)	0
10+741	40905	Motorcycles	-		17	-		56	none	-	-	Average (of DGAC and PCC)	0
10+741	40905	Auxiliary Vehicle	-	-	-			56	none	-	-	Average (of DGAC and PCC)	0
12+002	*45660*	*Total*	-		*3044*	-	-	*Traffic light*	*0*	-	*Average (of DGAC and PCC)*	*0*
12+002	45660	Automobiles	-		1777	-		56	Traffic light	0	-	Average (of DGAC and PCC)	0
12+002	45660	Medium trucks	-		1085	-		56	Traffic light	0	-	Average (of DGAC and PCC)	0
12+002	45660	Heavy trucks	-		142	-		56	Traffic light	0	-	Average (of DGAC and PCC)	0
12+002	45660	Buses	-		21	-		56	Traffic light	0	-	Average (of DGAC and PCC)	0
12+002	45660	Motorcycles	-		19	-		56	Traffic light	0	-	Average (of DGAC and PCC)	0
12+002	45660	Auxiliary Vehicle	-	-	-			56	Traffic light	0	-	Average (of DGAC and PCC)	0
12+148	*45660*	*Total*	-		*3044*	-	-	*none*	-	-	*Average (of DGAC and PCC)*	*0*
12+148	45660	Automobiles	-		1777	-		56	none	-	-	Average (of DGAC and PCC)	0
12+148	45660	Medium trucks	-		1085	-		56	none	-	-	Average (of DGAC and PCC)	0
12+148	45660	Heavy trucks	-		142	-		56	none	-	-	Average (of DGAC and PCC)	0
12+148	45660	Buses	-		21	-		56	none	-	-	Average (of DGAC and PCC)	0
12+148	45660	Motorcycles	-		19	-		56	none	-	-	Average (of DGAC and PCC)	0
12+148	45660	Auxiliary Vehicle	-	-	-			56	none	-	-	Average (of DGAC and PCC)	0
12+285	*45660*	*Total*	-		*3044*	-	-	*none*	-	-	*Average (of DGAC and PCC)*	*0*
12+285	45660	Automobiles	-		1777	-		56	none	-	-	Average (of DGAC and PCC)	0
12+285	45660	Medium trucks	-		1085	-		56	none	-	-	Average (of DGAC and PCC)	0
12+285	45660	Heavy trucks	-		142	-		56	none	-	-	Average (of DGAC and PCC)	0
12+285	45660	Buses	-		21	-		56	none	-	-	Average (of DGAC and PCC)	0
12+285	45660	Motorcycles	-		19	-		56	none	-	-	Average (of DGAC and PCC)	0
12+285	45660	Auxiliary Vehicle	-	-	-			56	none	-	-	Average (of DGAC and PCC)	0
12+478	*45660*	*Total*	-		*3044*	-	-	*none*	-	-	*Average (of DGAC and PCC)*	*0*
12+478	45660	Automobiles	-		1777	-		56	none	-	-	Average (of DGAC and PCC)	0
12+478	45660	Medium trucks	-		1085	-		56	none	-	-	Average (of DGAC and PCC)	0
12+478	45660	Heavy trucks	-		142	-		56	none	-	-	Average (of DGAC and PCC)	0
12+478	45660	Buses	-		21	-		56	none	-	-	Average (of DGAC and PCC)	0
12+478	45660	Motorcycles	-		19	-		56	none	-	-	Average (of DGAC and PCC)	0
12+478	45660	Auxiliary Vehicle	-	-	-			56	none	-	-	Average (of DGAC and PCC)	0
12+627	*40320*	*Total*	-		*2688*	-	-	*Traffic light*	*0*	-	*Average (of DGAC and PCC)*	*0*
12+627	40320	Automobiles	-		1569	-		56	Traffic light	0	-	Average (of DGAC and PCC)	0
12+627	40320	Medium trucks	-		958	-		56	Traffic light	0	-	Average (of DGAC and PCC)	0
12+627	40320	Heavy trucks	-		126	-		56	Traffic light	0	-	Average (of DGAC and PCC)	0
12+627	40320	Buses	-		18	-		56	Traffic light	0	-	Average (of DGAC and PCC)	0
12+627	40320	Motorcycles	-		17	-		56	Traffic light	0	-	Average (of DGAC and PCC)	0
12+627	40320	Auxiliary Vehicle	-	-	-			56	Traffic light	0	-	Average (of DGAC and PCC)	0
13+037	*40320*	*Total*	-		*2688*	-	-	*none*	-	-	*Average (of DGAC and PCC)*	*0*
13+037	40320	Automobiles	-		1569	-		56	none	-	-	Average (of DGAC and PCC)	0
13+037	40320	Medium trucks	-		958	-		56	none	-	-	Average (of DGAC and PCC)	0

13+037	40320	Heavy trucks	-	126	-	-	56	none	-	-	Average (of DGAC and PCC)	0
13+037	40320	Buses	-	18	-	-	56	none	-	-	Average (of DGAC and PCC)	0
13+037	40320	Motorcycles	-	17	-	-	56	none	-	-	Average (of DGAC and PCC)	0
13+037	40320	Auxiliary Vehicle	-	-	-	-	56	none	-	-	Average (of DGAC and PCC)	0
13+185	*40320*	*Total*	-	*2688*	-	-	*none*		-	-	*Average (of DGAC and PCC)*	*0*
13+185	40320	Automobiles	-	1569	-	-	56	none	-	-	Average (of DGAC and PCC)	0
13+185	40320	Medium trucks	-	958	-	-	56	none	-	-	Average (of DGAC and PCC)	0
13+185	40320	Heavy trucks	-	126	-	-	56	none	-	-	Average (of DGAC and PCC)	0
13+185	40320	Buses	-	18	-	-	56	none	-	-	Average (of DGAC and PCC)	0
13+185	40320	Motorcycles	-	17	-	-	56	none	-	-	Average (of DGAC and PCC)	0
13+185	40320	Auxiliary Vehicle	-	-	-	-	56	none	-	-	Average (of DGAC and PCC)	0
14+121	*40320*	*Total*	-	*2688*	-	-	*none*		-	-	*Average (of DGAC and PCC)*	*0*
14+121	40320	Automobiles	-	1569	-	-	56	none	-	-	Average (of DGAC and PCC)	0
14+121	40320	Medium trucks	-	958	-	-	56	none	-	-	Average (of DGAC and PCC)	0
14+121	40320	Heavy trucks	-	126	-	-	56	none	-	-	Average (of DGAC and PCC)	0
14+121	40320	Buses	-	18	-	-	56	none	-	-	Average (of DGAC and PCC)	0
14+121	40320	Motorcycles	-	17	-	-	56	none	-	-	Average (of DGAC and PCC)	0
14+121	40320	Auxiliary Vehicle	-	-	-	-	56	none	-	-	Average (of DGAC and PCC)	0
14+203	*40320*	*Total*	-	*2688*	-	-	*none*		-	-	*Average (of DGAC and PCC)*	*0*
14+203	40320	Automobiles	-	1569	-	-	56	none	-	-	Average (of DGAC and PCC)	0
14+203	40320	Medium trucks	-	958	-	-	56	none	-	-	Average (of DGAC and PCC)	0
14+203	40320	Heavy trucks	-	126	-	-	56	none	-	-	Average (of DGAC and PCC)	0
14+203	40320	Buses	-	18	-	-	56	none	-	-	Average (of DGAC and PCC)	0
14+203	40320	Motorcycles	-	17	-	-	56	none	-	-	Average (of DGAC and PCC)	0
14+203	40320	Auxiliary Vehicle	-	-	-	-	56	none	-	-	Average (of DGAC and PCC)	0
14+325	*40320*	*Total*	-	*2688*	-	-	*none*		-	-	*Average (of DGAC and PCC)*	*0*
14+325	40320	Automobiles	-	1569	-	-	56	none	-	-	Average (of DGAC and PCC)	0
14+325	40320	Medium trucks	-	958	-	-	56	none	-	-	Average (of DGAC and PCC)	0
14+325	40320	Heavy trucks	-	126	-	-	56	none	-	-	Average (of DGAC and PCC)	0
14+325	40320	Buses	-	18	-	-	56	none	-	-	Average (of DGAC and PCC)	0
14+325	40320	Motorcycles	-	17	-	-	56	none	-	-	Average (of DGAC and PCC)	0
14+325	40320	Auxiliary Vehicle	-	-	-	-	56	none	-	-	Average (of DGAC and PCC)	0
14+463	-						-		-	-	-	-
0+000	*40320*	*Total*	-	*2688*	-	-	*none*		-	-	*Average (of DGAC and PCC)*	*0*
0+000	40320	Automobiles	-	1569	-	-	56	none	-	-	Average (of DGAC and PCC)	0
0+000	40320	Medium trucks	-	958	-	-	56	none	-	-	Average (of DGAC and PCC)	0
0+000	40320	Heavy trucks	-	126	-	-	56	none	-	-	Average (of DGAC and PCC)	0
0+000	40320	Buses	-	18	-	-	56	none	-	-	Average (of DGAC and PCC)	0
0+000	40320	Motorcycles	-	17	-	-	56	none	-	-	Average (of DGAC and PCC)	0
0+000	40320	Auxiliary Vehicle	-	-	-	-	56	none	-	-	Average (of DGAC and PCC)	0
Valley Mall SB	Traffic direction:	In entry direction										
10+304	*2190*	*Total*	-	*146*	-	-	*none*		-	-	*Average (of DGAC and PCC)*	*0*
10+304	2190	Automobiles	-	85	-	-	40	none	-	-	Average (of DGAC and PCC)	0
10+304	2190	Medium trucks	-	52	-	-	40	none	-	-	Average (of DGAC and PCC)	0
10+304	2190	Heavy trucks	-	7	-	-	40	none	-	-	Average (of DGAC and PCC)	0
10+304	2190	Buses	-	1	-	-	40	none	-	-	Average (of DGAC and PCC)	0
10+304	2190	Motorcycles	-	1	-	-	40	none	-	-	Average (of DGAC and PCC)	0
10+304	2190	Auxiliary Vehicle	-	-	-	-	40	none	-	-	Average (of DGAC and PCC)	0
10+378	*2190*	*Total*	-	*146*	-	-	*none*		-	-	*Average (of DGAC and PCC)*	*0*
10+378	2190	Automobiles	-	85	-	-	40	none	-	-	Average (of DGAC and PCC)	0
10+378	2190	Medium trucks	-	52	-	-	40	none	-	-	Average (of DGAC and PCC)	0
10+378	2190	Heavy trucks	-	7	-	-	40	none	-	-	Average (of DGAC and PCC)	0
10+378	2190	Buses	-	1	-	-	40	none	-	-	Average (of DGAC and PCC)	0
10+378	2190	Motorcycles	-	1	-	-	40	none	-	-	Average (of DGAC and PCC)	0
10+378	2190	Auxiliary Vehicle	-	-	-	-	40	none	-	-	Average (of DGAC and PCC)	0
10+931	*2190*	*Total*	-	*146*	-	-	*none*		-	-	*Average (of DGAC and PCC)*	*0*
10+931	2190	Automobiles	-	85	-	-	40	none	-	-	Average (of DGAC and PCC)	0
10+931	2190	Medium trucks	-	52	-	-	40	none	-	-	Average (of DGAC and PCC)	0
10+931	2190	Heavy trucks	-	7	-	-	40	none	-	-	Average (of DGAC and PCC)	0
10+931	2190	Buses	-	1	-	-	40	none	-	-	Average (of DGAC and PCC)	0
10+931	2190	Motorcycles	-	1	-	-	40	none	-	-	Average (of DGAC and PCC)	0
10+931	2190	Auxiliary Vehicle	-	-	-	-	40	none	-	-	Average (of DGAC and PCC)	0

11+490	-							-	-	-	-	-	
Ramona Blvd EB	Traffic direction:	In entry direction											
10+304	*13935*	*Total*	-	*929*	-	-	*Traffic light*	*0*	-	*Average (of DGAC and PCC)*		*0*	
10+304	13935	Automobiles	-	541	-		56 Traffic light	0	-	Average (of DGAC and PCC)		0	
10+304	13935	Medium trucks	-	331	-		56 Traffic light	0	-	Average (of DGAC and PCC)		0	
10+304	13935	Heavy trucks	-	44	-		56 Traffic light	0	-	Average (of DGAC and PCC)		0	
10+304	13935	Buses	-	7	-		56 Traffic light	0	-	Average (of DGAC and PCC)		0	
10+304	13935	Motorcycles	-	6	-		56 Traffic light	0	-	Average (of DGAC and PCC)		0	
10+304	13935	Auxiliary Vehicle	-	-	-		56 Traffic light	0	-	Average (of DGAC and PCC)		0	
11+003	*15705*	*Total*	-	*1047*	-	-	*Traffic light*	*0*	-	*Average (of DGAC and PCC)*		*0*	
11+003	15705	Automobiles	-	611	-		56 Traffic light	0	-	Average (of DGAC and PCC)		0	
11+003	15705	Medium trucks	-	373	-		56 Traffic light	0	-	Average (of DGAC and PCC)		0	
11+003	15705	Heavy trucks	-	49	-		56 Traffic light	0	-	Average (of DGAC and PCC)		0	
11+003	15705	Buses	-	7	-		56 Traffic light	0	-	Average (of DGAC and PCC)		0	
11+003	15705	Motorcycles	-	7	-		56 Traffic light	0	-	Average (of DGAC and PCC)		0	
11+003	15705	Auxiliary Vehicle	-	-	-		56 Traffic light	0	-	Average (of DGAC and PCC)		0	
11+209	*15705*	*Total*	-	*1047*	-	-	*none*	-	-	*Average (of DGAC and PCC)*		*0*	
11+209	15705	Automobiles	-	611	-		56 none	-	-	Average (of DGAC and PCC)		0	
11+209	15705	Medium trucks	-	373	-		56 none	-	-	Average (of DGAC and PCC)		0	
11+209	15705	Heavy trucks	-	49	-		56 none	-	-	Average (of DGAC and PCC)		0	
11+209	15705	Buses	-	7	-		56 none	-	-	Average (of DGAC and PCC)		0	
11+209	15705	Motorcycles	-	7	-		56 none	-	-	Average (of DGAC and PCC)		0	
11+209	15705	Auxiliary Vehicle	-	-	-		56 none	-	-	Average (of DGAC and PCC)		0	
11+417	*22215*	*Total*	-	*1481*	-	-	*Traffic light*	*0*	-	*Average (of DGAC and PCC)*		*0*	
11+417	22215	Automobiles	-	864	-		56 Traffic light	0	-	Average (of DGAC and PCC)		0	
11+417	22215	Medium trucks	-	528	-		56 Traffic light	0	-	Average (of DGAC and PCC)		0	
11+417	22215	Heavy trucks	-	69	-		56 Traffic light	0	-	Average (of DGAC and PCC)		0	
11+417	22215	Buses	-	10	-		56 Traffic light	0	-	Average (of DGAC and PCC)		0	
11+417	22215	Motorcycles	-	10	-		56 Traffic light	0	-	Average (of DGAC and PCC)		0	
11+417	22215	Auxiliary Vehicle	-	-	-		56 Traffic light	0	-	Average (of DGAC and PCC)		0	
11+683	*22215*	*Total*	-	*1481*	-	-	*none*	-	-	*Average (of DGAC and PCC)*		*0*	
11+683	22215	Automobiles	-	864	-		56 none	-	-	Average (of DGAC and PCC)		0	
11+683	22215	Medium trucks	-	528	-		56 none	-	-	Average (of DGAC and PCC)		0	
11+683	22215	Heavy trucks	-	69	-		56 none	-	-	Average (of DGAC and PCC)		0	
11+683	22215	Buses	-	10	-		56 none	-	-	Average (of DGAC and PCC)		0	
11+683	22215	Motorcycles	-	10	-		56 none	-	-	Average (of DGAC and PCC)		0	
11+683	22215	Auxiliary Vehicle	-	-	-		56 none	-	-	Average (of DGAC and PCC)		0	
12+563	*33090*	*Total*	-	*2206*	-	-	*Traffic light*	*0*	-	*Average (of DGAC and PCC)*		*0*	
12+563	33090	Automobiles	-	1288	-		56 Traffic light	0	-	Average (of DGAC and PCC)		0	
12+563	33090	Medium trucks	-	786	-		56 Traffic light	0	-	Average (of DGAC and PCC)		0	
12+563	33090	Heavy trucks	-	103	-		56 Traffic light	0	-	Average (of DGAC and PCC)		0	
12+563	33090	Buses	-	15	-		56 Traffic light	0	-	Average (of DGAC and PCC)		0	
12+563	33090	Motorcycles	-	14	-		56 Traffic light	0	-	Average (of DGAC and PCC)		0	
12+563	33090	Auxiliary Vehicle	-	-	-		56 Traffic light	0	-	Average (of DGAC and PCC)		0	
14+595	*36180*	*Total*	-	*2412*	-	-	*Traffic light*	*0*	-	*Average (of DGAC and PCC)*		*0*	
14+595	36180	Automobiles	-	1408	-		56 Traffic light	0	-	Average (of DGAC and PCC)		0	
14+595	36180	Medium trucks	-	860	-		56 Traffic light	0	-	Average (of DGAC and PCC)		0	
14+595	36180	Heavy trucks	-	113	-		56 Traffic light	0	-	Average (of DGAC and PCC)		0	
14+595	36180	Buses	-	16	-		56 Traffic light	0	-	Average (of DGAC and PCC)		0	
14+595	36180	Motorcycles	-	15	-		56 Traffic light	0	-	Average (of DGAC and PCC)		0	
14+595	36180	Auxiliary Vehicle	-	-	-		56 Traffic light	0	-	Average (of DGAC and PCC)		0	
15+120	*35745*	*Total*	-	*2383*	-	-	*Traffic light*	*0*	-	*Average (of DGAC and PCC)*		*0*	
15+120	35745	Automobiles	-	1391	-		56 Traffic light	0	-	Average (of DGAC and PCC)		0	
15+120	35745	Medium trucks	-	849	-		56 Traffic light	0	-	Average (of DGAC and PCC)		0	
15+120	35745	Heavy trucks	-	112	-		56 Traffic light	0	-	Average (of DGAC and PCC)		0	
15+120	35745	Buses	-	16	-		56 Traffic light	0	-	Average (of DGAC and PCC)		0	
15+120	35745	Motorcycles	-	15	-		56 Traffic light	0	-	Average (of DGAC and PCC)		0	
15+120	35745	Auxiliary Vehicle	-	-	-		56 Traffic light	0	-	Average (of DGAC and PCC)		0	
15+353	-							-	-	-	-	-	
0+000	*35745*	*Total*	-	*2383*	-	-	*Traffic light*	*0*	-	*Average (of DGAC and PCC)*		*0*	
0+000	35745	Automobiles	-	1391	-		56 Traffic light	0	-	Average (of DGAC and PCC)		0	
0+000	35745	Medium trucks	-	849	-		56 Traffic light	0	-	Average (of DGAC and PCC)		0	

0+000	35745	Heavy trucks	-	112	-	56	Traffic light	0	-	Average (of DGAC and PCC)	0
0+000	35745	Buses	-	16	-	56	Traffic light	0	-	Average (of DGAC and PCC)	0
0+000	35745	Motorcycles	-	15	-	56	Traffic light	0	-	Average (of DGAC and PCC)	0
0+000	35745	Auxiliary Vehicle	-	-	-	56	Traffic light	0	-	Average (of DGAC and PCC)	0
Ramona Blvd WB	Traffic direction:	In entry direction									
10+304	*34080*	*Total*	-	*2272*	-	-	*none*	-	-	*Average (of DGAC and PCC)*	*0*
10+304	34080	Automobiles	-	1327	-	56	none	-	-	Average (of DGAC and PCC)	0
10+304	34080	Medium trucks	-	810	-	56	none	-	-	Average (of DGAC and PCC)	0
10+304	34080	Heavy trucks	-	106	-	56	none	-	-	Average (of DGAC and PCC)	0
10+304	34080	Buses	-	15	-	56	none	-	-	Average (of DGAC and PCC)	0
10+304	34080	Motorcycles	-	14	-	56	none	-	-	Average (of DGAC and PCC)	0
10+304	34080	Auxiliary Vehicle	-	-	-	56	none	-	-	Average (of DGAC and PCC)	0
10+516	*34080*	*Total*	-	*2272*	-	-	*Traffic light*	*0*	-	*Average (of DGAC and PCC)*	*0*
10+516	34080	Automobiles	-	1327	-	56	Traffic light	0	-	Average (of DGAC and PCC)	0
10+516	34080	Medium trucks	-	810	-	56	Traffic light	0	-	Average (of DGAC and PCC)	0
10+516	34080	Heavy trucks	-	106	-	56	Traffic light	0	-	Average (of DGAC and PCC)	0
10+516	34080	Buses	-	15	-	56	Traffic light	0	-	Average (of DGAC and PCC)	0
10+516	34080	Motorcycles	-	14	-	56	Traffic light	0	-	Average (of DGAC and PCC)	0
10+516	34080	Auxiliary Vehicle	-	-	-	56	Traffic light	0	-	Average (of DGAC and PCC)	0
11+050	*32925*	*Total*	-	*2195*	-	-	*Traffic light*	*0*	-	*Average (of DGAC and PCC)*	*0*
11+050	32925	Automobiles	-	1281	-	56	Traffic light	0	-	Average (of DGAC and PCC)	0
11+050	32925	Medium trucks	-	782	-	56	Traffic light	0	-	Average (of DGAC and PCC)	0
11+050	32925	Heavy trucks	-	103	-	56	Traffic light	0	-	Average (of DGAC and PCC)	0
11+050	32925	Buses	-	15	-	56	Traffic light	0	-	Average (of DGAC and PCC)	0
11+050	32925	Motorcycles	-	14	-	56	Traffic light	0	-	Average (of DGAC and PCC)	0
11+050	32925	Auxiliary Vehicle	-	-	-	56	Traffic light	0	-	Average (of DGAC and PCC)	0
13+093	*26970*	*Total*	-	*1798*	-	-	*Traffic light*	*0*	-	*Average (of DGAC and PCC)*	*0*
13+093	26970	Automobiles	-	1049	-	56	Traffic light	0	-	Average (of DGAC and PCC)	0
13+093	26970	Medium trucks	-	641	-	56	Traffic light	0	-	Average (of DGAC and PCC)	0
13+093	26970	Heavy trucks	-	84	-	56	Traffic light	0	-	Average (of DGAC and PCC)	0
13+093	26970	Buses	-	12	-	56	Traffic light	0	-	Average (of DGAC and PCC)	0
13+093	26970	Motorcycles	-	12	-	56	Traffic light	0	-	Average (of DGAC and PCC)	0
13+093	26970	Auxiliary Vehicle	-	-	-	56	Traffic light	0	-	Average (of DGAC and PCC)	0
13+951	*26970*	*Total*	-	*1798*	-	-	*none*	-	-	*Average (of DGAC and PCC)*	*0*
13+951	26970	Automobiles	-	1049	-	56	none	-	-	Average (of DGAC and PCC)	0
13+951	26970	Medium trucks	-	641	-	56	none	-	-	Average (of DGAC and PCC)	0
13+951	26970	Heavy trucks	-	84	-	56	none	-	-	Average (of DGAC and PCC)	0
13+951	26970	Buses	-	12	-	56	none	-	-	Average (of DGAC and PCC)	0
13+951	26970	Motorcycles	-	12	-	56	none	-	-	Average (of DGAC and PCC)	0
13+951	26970	Auxiliary Vehicle	-	-	-	56	none	-	-	Average (of DGAC and PCC)	0
14+222	*16725*	*Total*	-	*1115*	-	-	*Traffic light*	*0*	-	*Average (of DGAC and PCC)*	*0*
14+222	16725	Automobiles	-	651	-	56	Traffic light	0	-	Average (of DGAC and PCC)	0
14+222	16725	Medium trucks	-	397	-	56	Traffic light	0	-	Average (of DGAC and PCC)	0
14+222	16725	Heavy trucks	-	52	-	56	Traffic light	0	-	Average (of DGAC and PCC)	0
14+222	16725	Buses	-	8	-	56	Traffic light	0	-	Average (of DGAC and PCC)	0
14+222	16725	Motorcycles	-	7	-	56	Traffic light	0	-	Average (of DGAC and PCC)	0
14+222	16725	Auxiliary Vehicle	-	-	-	56	Traffic light	0	-	Average (of DGAC and PCC)	0
14+437	*16725*	*Total*	-	*1115*	-	-	*none*	-	-	*Average (of DGAC and PCC)*	*0*
14+437	16725	Automobiles	-	651	-	56	none	-	-	Average (of DGAC and PCC)	0
14+437	16725	Medium trucks	-	397	-	56	none	-	-	Average (of DGAC and PCC)	0
14+437	16725	Heavy trucks	-	52	-	56	none	-	-	Average (of DGAC and PCC)	0
14+437	16725	Buses	-	8	-	56	none	-	-	Average (of DGAC and PCC)	0
14+437	16725	Motorcycles	-	7	-	56	none	-	-	Average (of DGAC and PCC)	0
14+437	16725	Auxiliary Vehicle	-	-	-	56	none	-	-	Average (of DGAC and PCC)	0
14+633	*15945*	*Total*	-	*1063*	-	-	*Traffic light*	*0*	-	*Average (of DGAC and PCC)*	*0*
14+633	15945	Automobiles	-	620	-	56	Traffic light	0	-	Average (of DGAC and PCC)	0
14+633	15945	Medium trucks	-	379	-	56	Traffic light	0	-	Average (of DGAC and PCC)	0
14+633	15945	Heavy trucks	-	50	-	56	Traffic light	0	-	Average (of DGAC and PCC)	0
14+633	15945	Buses	-	7	-	56	Traffic light	0	-	Average (of DGAC and PCC)	0
14+633	15945	Motorcycles	-	7	-	56	Traffic light	0	-	Average (of DGAC and PCC)	0
14+633	15945	Auxiliary Vehicle	-	-	-	56	Traffic light	0	-	Average (of DGAC and PCC)	0
15+348	-						-	-	-	-	-

0+000	*16680*	*Total*	-	*1112*	-	-	*Traffic light*	*0*	-	*Average (of DGAC and PCC)*	*0*
0+000	16680	Automobiles	-	649	-		56 Traffic light	0	-	Average (of DGAC and PCC)	0
0+000	16680	Medium trucks	-	396	-		56 Traffic light	0	-	Average (of DGAC and PCC)	0
0+000	16680	Heavy trucks	-	52	-		56 Traffic light	0	-	Average (of DGAC and PCC)	0
0+000	16680	Buses	-	8	-		56 Traffic light	0	-	Average (of DGAC and PCC)	0
0+000	16680	Motorcycles	-	7	-		56 Traffic light	0	-	Average (of DGAC and PCC)	0
0+000	16680	Auxiliary Vehicle	-	-	-		56 Traffic light	0	-	Average (of DGAC and PCC)	0
Peck Rd SB	Traffic direction:	In entry direction									
10+304	*39885*	*Total*	-	*2659*	-	-	*none*	-	-	*Average (of DGAC and PCC)*	*0*
10+304	39885	Automobiles	-	1552	-		56 none	-	-	Average (of DGAC and PCC)	0
10+304	39885	Medium trucks	-	948	-		56 none	-	-	Average (of DGAC and PCC)	0
10+304	39885	Heavy trucks	-	124	-		56 none	-	-	Average (of DGAC and PCC)	0
10+304	39885	Buses	-	18	-		56 none	-	-	Average (of DGAC and PCC)	0
10+304	39885	Motorcycles	-	17	-		56 none	-	-	Average (of DGAC and PCC)	0
10+304	39885	Auxiliary Vehicle	-	-	-		56 none	-	-	Average (of DGAC and PCC)	0
10+796	*39885*	*Total*	-	*2659*	-	-	*Traffic light*	*0*	-	*Average (of DGAC and PCC)*	*0*
10+796	39885	Automobiles	-	1552	-		56 Traffic light	0	-	Average (of DGAC and PCC)	0
10+796	39885	Medium trucks	-	948	-		56 Traffic light	0	-	Average (of DGAC and PCC)	0
10+796	39885	Heavy trucks	-	124	-		56 Traffic light	0	-	Average (of DGAC and PCC)	0
10+796	39885	Buses	-	18	-		56 Traffic light	0	-	Average (of DGAC and PCC)	0
10+796	39885	Motorcycles	-	17	-		56 Traffic light	0	-	Average (of DGAC and PCC)	0
10+796	39885	Auxiliary Vehicle	-	-	-		56 Traffic light	0	-	Average (of DGAC and PCC)	0
13+264	*45075*	*Total*	-	*3005*	-	-	*Traffic light*	*0*	-	*Average (of DGAC and PCC)*	*0*
13+264	45075	Automobiles	-	1754	-		56 Traffic light	0	-	Average (of DGAC and PCC)	0
13+264	45075	Medium trucks	-	1071	-		56 Traffic light	0	-	Average (of DGAC and PCC)	0
13+264	45075	Heavy trucks	-	141	-		56 Traffic light	0	-	Average (of DGAC and PCC)	0
13+264	45075	Buses	-	20	-		56 Traffic light	0	-	Average (of DGAC and PCC)	0
13+264	45075	Motorcycles	-	19	-		56 Traffic light	0	-	Average (of DGAC and PCC)	0
13+264	45075	Auxiliary Vehicle	-	-	-		56 Traffic light	0	-	Average (of DGAC and PCC)	0
13+395	*45075*	*Total*	-	*3005*	-	-	*none*	-	-	*Average (of DGAC and PCC)*	*0*
13+395	45075	Automobiles	-	1754	-		56 none	-	-	Average (of DGAC and PCC)	0
13+395	45075	Medium trucks	-	1071	-		56 none	-	-	Average (of DGAC and PCC)	0
13+395	45075	Heavy trucks	-	141	-		56 none	-	-	Average (of DGAC and PCC)	0
13+395	45075	Buses	-	20	-		56 none	-	-	Average (of DGAC and PCC)	0
13+395	45075	Motorcycles	-	19	-		56 none	-	-	Average (of DGAC and PCC)	0
13+395	45075	Auxiliary Vehicle	-	-	-		56 none	-	-	Average (of DGAC and PCC)	0
13+528	*45075*	*Total*	-	*3005*	-	-	*none*	-	-	*Average (of DGAC and PCC)*	*0*
13+528	45075	Automobiles	-	1754	-		56 none	-	-	Average (of DGAC and PCC)	0
13+528	45075	Medium trucks	-	1071	-		56 none	-	-	Average (of DGAC and PCC)	0
13+528	45075	Heavy trucks	-	141	-		56 none	-	-	Average (of DGAC and PCC)	0
13+528	45075	Buses	-	20	-		56 none	-	-	Average (of DGAC and PCC)	0
13+528	45075	Motorcycles	-	19	-		56 none	-	-	Average (of DGAC and PCC)	0
13+528	45075	Auxiliary Vehicle	-	-	-		56 none	-	-	Average (of DGAC and PCC)	0
14+172	*50985*	*Total*	-	*3399*	-	-	*Traffic light*	*0*	-	*Average (of DGAC and PCC)*	*0*
14+172	50985	Automobiles	-	1984	-		56 Traffic light	0	-	Average (of DGAC and PCC)	0
14+172	50985	Medium trucks	-	1212	-		56 Traffic light	0	-	Average (of DGAC and PCC)	0
14+172	50985	Heavy trucks	-	159	-		56 Traffic light	0	-	Average (of DGAC and PCC)	0
14+172	50985	Buses	-	23	-		56 Traffic light	0	-	Average (of DGAC and PCC)	0
14+172	50985	Motorcycles	-	21	-		56 Traffic light	0	-	Average (of DGAC and PCC)	0
14+172	50985	Auxiliary Vehicle	-	-	-		56 Traffic light	0	-	Average (of DGAC and PCC)	0
14+486	*50985*	*Total*	-	*3399*	-	-	*none*	-	-	*Average (of DGAC and PCC)*	*0*
14+486	50985	Automobiles	-	1984	-		56 none	-	-	Average (of DGAC and PCC)	0
14+486	50985	Medium trucks	-	1212	-		56 none	-	-	Average (of DGAC and PCC)	0
14+486	50985	Heavy trucks	-	159	-		56 none	-	-	Average (of DGAC and PCC)	0
14+486	50985	Buses	-	23	-		56 none	-	-	Average (of DGAC and PCC)	0
14+486	50985	Motorcycles	-	21	-		56 none	-	-	Average (of DGAC and PCC)	0
14+486	50985	Auxiliary Vehicle	-	-	-		56 none	-	-	Average (of DGAC and PCC)	0
14+669	*50985*	*Total*	-	*3399*	-	-	*none*	-	-	*Average (of DGAC and PCC)*	*0*
14+669	50985	Automobiles	-	1984	-		56 none	-	-	Average (of DGAC and PCC)	0
14+669	50985	Medium trucks	-	1212	-		56 none	-	-	Average (of DGAC and PCC)	0
14+669	50985	Heavy trucks	-	159	-		56 none	-	-	Average (of DGAC and PCC)	0
14+669	50985	Buses	-	23	-		56 none	-	-	Average (of DGAC and PCC)	0

14+669	50985	Motorcycles	-	21	-	56	none	-	-	Average (of DGAC and PCC)	0
14+669	50985	Auxiliary Vehicle	-	-	-	56	none	-	-	Average (of DGAC and PCC)	0
14+834	*50985*	*Total*	-	*3399*	-	-	*none*	-	-	*Average (of DGAC and PCC)*	*0*
14+834	50985	Automobiles	-	1984	-	56	none	-	-	Average (of DGAC and PCC)	0
14+834	50985	Medium trucks	-	1212	-	56	none	-	-	Average (of DGAC and PCC)	0
14+834	50985	Heavy trucks	-	159	-	56	none	-	-	Average (of DGAC and PCC)	0
14+834	50985	Buses	-	23	-	56	none	-	-	Average (of DGAC and PCC)	0
14+834	50985	Motorcycles	-	21	-	56	none	-	-	Average (of DGAC and PCC)	0
14+834	50985	Auxiliary Vehicle	-	-	-	56	none	-	-	Average (of DGAC and PCC)	0
15+091	*27870*	*Total*	-	*1858*	-	-	*Traffic light*	*0*	-	*Average (of DGAC and PCC)*	*0*
15+091	27870	Automobiles	-	1084	-	56	Traffic light	0	-	Average (of DGAC and PCC)	0
15+091	27870	Medium trucks	-	662	-	56	Traffic light	0	-	Average (of DGAC and PCC)	0
15+091	27870	Heavy trucks	-	87	-	56	Traffic light	0	-	Average (of DGAC and PCC)	0
15+091	27870	Buses	-	13	-	56	Traffic light	0	-	Average (of DGAC and PCC)	0
15+091	27870	Motorcycles	-	12	-	56	Traffic light	0	-	Average (of DGAC and PCC)	0
15+091	27870	Auxiliary Vehicle	-	-	-	56	Traffic light	0	-	Average (of DGAC and PCC)	0
15+669	-						-	-	-	-	-
0+000	*27870*	*Total*	-	*1858*	-	-	*none*	-	-	*Average (of DGAC and PCC)*	*0*
0+000	27870	Automobiles	-	1084	-	56	none	-	-	Average (of DGAC and PCC)	0
0+000	27870	Medium trucks	-	662	-	56	none	-	-	Average (of DGAC and PCC)	0
0+000	27870	Heavy trucks	-	87	-	56	none	-	-	Average (of DGAC and PCC)	0
0+000	27870	Buses	-	13	-	56	none	-	-	Average (of DGAC and PCC)	0
0+000	27870	Motorcycles	-	12	-	56	none	-	-	Average (of DGAC and PCC)	0
0+000	27870	Auxiliary Vehicle	-	-	-	56	none	-	-	Average (of DGAC and PCC)	0
Peck Rd NB	Traffic direction:	In entry direction									
10+304	*34560*	*Total*	-	*2304*	-	-	*none*	-	-	*Average (of DGAC and PCC)*	*0*
10+304	34560	Automobiles	-	1344	-	56	none	-	-	Average (of DGAC and PCC)	0
10+304	34560	Medium trucks	-	821	-	56	none	-	-	Average (of DGAC and PCC)	0
10+304	34560	Heavy trucks	-	108	-	56	none	-	-	Average (of DGAC and PCC)	0
10+304	34560	Buses	-	16	-	56	none	-	-	Average (of DGAC and PCC)	0
10+304	34560	Motorcycles	-	15	-	56	none	-	-	Average (of DGAC and PCC)	0
10+304	34560	Auxiliary Vehicle	-	-	-	56	none	-	-	Average (of DGAC and PCC)	0
10+866	*34545*	*Total*	-	*2303*	-	-	*Traffic light*	*0*	-	*Average (of DGAC and PCC)*	*0*
10+866	34545	Automobiles	-	1344	-	56	Traffic light	0	-	Average (of DGAC and PCC)	0
10+866	34545	Medium trucks	-	820	-	56	Traffic light	0	-	Average (of DGAC and PCC)	0
10+866	34545	Heavy trucks	-	108	-	56	Traffic light	0	-	Average (of DGAC and PCC)	0
10+866	34545	Buses	-	16	-	56	Traffic light	0	-	Average (of DGAC and PCC)	0
10+866	34545	Motorcycles	-	15	-	56	Traffic light	0	-	Average (of DGAC and PCC)	0
10+866	34545	Auxiliary Vehicle	-	-	-	56	Traffic light	0	-	Average (of DGAC and PCC)	0
11+164	*34560*	*Total*	-	*2304*	-	-	*none*	-	-	*Average (of DGAC and PCC)*	*0*
11+164	34560	Automobiles	-	1344	-	56	none	-	-	Average (of DGAC and PCC)	0
11+164	34560	Medium trucks	-	821	-	56	none	-	-	Average (of DGAC and PCC)	0
11+164	34560	Heavy trucks	-	108	-	56	none	-	-	Average (of DGAC and PCC)	0
11+164	34560	Buses	-	16	-	56	none	-	-	Average (of DGAC and PCC)	0
11+164	34560	Motorcycles	-	15	-	56	none	-	-	Average (of DGAC and PCC)	0
11+164	34560	Auxiliary Vehicle	-	-	-	56	none	-	-	Average (of DGAC and PCC)	0
11+298	*34560*	*Total*	-	*2304*	-	-	*none*	-	-	*Average (of DGAC and PCC)*	*0*
11+298	34560	Automobiles	-	1344	-	56	none	-	-	Average (of DGAC and PCC)	0
11+298	34560	Medium trucks	-	821	-	56	none	-	-	Average (of DGAC and PCC)	0
11+298	34560	Heavy trucks	-	108	-	56	none	-	-	Average (of DGAC and PCC)	0
11+298	34560	Buses	-	16	-	56	none	-	-	Average (of DGAC and PCC)	0
11+298	34560	Motorcycles	-	15	-	56	none	-	-	Average (of DGAC and PCC)	0
11+298	34560	Auxiliary Vehicle	-	-	-	56	none	-	-	Average (of DGAC and PCC)	0
11+487	*34560*	*Total*	-	*2304*	-	-	*none*	-	-	*Average (of DGAC and PCC)*	*0*
11+487	34560	Automobiles	-	1344	-	56	none	-	-	Average (of DGAC and PCC)	0
11+487	34560	Medium trucks	-	821	-	56	none	-	-	Average (of DGAC and PCC)	0
11+487	34560	Heavy trucks	-	108	-	56	none	-	-	Average (of DGAC and PCC)	0
11+487	34560	Buses	-	16	-	56	none	-	-	Average (of DGAC and PCC)	0
11+487	34560	Motorcycles	-	15	-	56	none	-	-	Average (of DGAC and PCC)	0
11+487	34560	Auxiliary Vehicle	-	-	-	56	none	-	-	Average (of DGAC and PCC)	0
11+756	*52335*	*Total*	-	*3489*	-	-	*Traffic light*	*0*	-	*Average (of DGAC and PCC)*	*0*
11+756	52335	Automobiles	-	2037	-	56	Traffic light	0	-	Average (of DGAC and PCC)	0

11+756	52335	Medium trucks	-	1244	-		56	Traffic light	0	-	Average (of DGAC and PCC)		0
11+756	52335	Heavy trucks	-	163	-		56	Traffic light	0	-	Average (of DGAC and PCC)		0
11+756	52335	Buses	-	23	-		56	Traffic light	0	-	Average (of DGAC and PCC)		0
11+756	52335	Motorcycles	-	22	-		56	Traffic light	0	-	Average (of DGAC and PCC)		0
11+756	52335	Auxiliary Vehicle	-	-	-		56	Traffic light	0	-	Average (of DGAC and PCC)		0
12+431	*52335*	*Total*	-	*3489*	-	-	*none*	-	-		*Average (of DGAC and PCC)*		*0*
12+431	52335	Automobiles	-	2037	-		56	none	-	-	Average (of DGAC and PCC)		0
12+431	52335	Medium trucks	-	1244	-		56	none	-	-	Average (of DGAC and PCC)		0
12+431	52335	Heavy trucks	-	163	-		56	none	-	-	Average (of DGAC and PCC)		0
12+431	52335	Buses	-	23	-		56	none	-	-	Average (of DGAC and PCC)		0
12+431	52335	Motorcycles	-	22	-		56	none	-	-	Average (of DGAC and PCC)		0
12+431	52335	Auxiliary Vehicle	-	-	-		56	none	-	-	Average (of DGAC and PCC)		0
12+568	*52335*	*Total*	-	*3489*	-	-	*none*	-	-		*Average (of DGAC and PCC)*		*0*
12+568	52335	Automobiles	-	2037	-		56	none	-	-	Average (of DGAC and PCC)		0
12+568	52335	Medium trucks	-	1244	-		56	none	-	-	Average (of DGAC and PCC)		0
12+568	52335	Heavy trucks	-	163	-		56	none	-	-	Average (of DGAC and PCC)		0
12+568	52335	Buses	-	23	-		56	none	-	-	Average (of DGAC and PCC)		0
12+568	52335	Motorcycles	-	22	-		56	none	-	-	Average (of DGAC and PCC)		0
12+568	52335	Auxiliary Vehicle	-	-	-		56	none	-	-	Average (of DGAC and PCC)		0
12+697	*49815*	*Total*	-	*3321*	-	-	*Traffic light*		*0*	-	*Average (of DGAC and PCC)*		*0*
12+697	49815	Automobiles	-	1939	-		56	Traffic light	0	-	Average (of DGAC and PCC)		0
12+697	49815	Medium trucks	-	1184	-		56	Traffic light	0	-	Average (of DGAC and PCC)		0
12+697	49815	Heavy trucks	-	155	-		56	Traffic light	0	-	Average (of DGAC and PCC)		0
12+697	49815	Buses	-	22	-		56	Traffic light	0	-	Average (of DGAC and PCC)		0
12+697	49815	Motorcycles	-	21	-		56	Traffic light	0	-	Average (of DGAC and PCC)		0
12+697	49815	Auxiliary Vehicle	-	-	-		56	Traffic light	0	-	Average (of DGAC and PCC)		0
15+162	*36870*	*Total*	-	*2458*	-	-	*Traffic light*		*0*	-	*Average (of DGAC and PCC)*		*0*
15+162	36870	Automobiles	-	1434	-		56	Traffic light	0	-	Average (of DGAC and PCC)		0
15+162	36870	Medium trucks	-	876	-		56	Traffic light	0	-	Average (of DGAC and PCC)		0
15+162	36870	Heavy trucks	-	115	-		56	Traffic light	0	-	Average (of DGAC and PCC)		0
15+162	36870	Buses	-	17	-		56	Traffic light	0	-	Average (of DGAC and PCC)		0
15+162	36870	Motorcycles	-	16	-		56	Traffic light	0	-	Average (of DGAC and PCC)		0
15+162	36870	Auxiliary Vehicle	-	-	-		56	Traffic light	0	-	Average (of DGAC and PCC)		0
15+669	-						-	-	-		-	-	
0+000	*36870*	*Total*	-	*2458*	-	-	*none*	-	-		*Average (of DGAC and PCC)*		*0*
0+000	36870	Automobiles	-	1434	-		56	none	-	-	Average (of DGAC and PCC)		0
0+000	36870	Medium trucks	-	876	-		56	none	-	-	Average (of DGAC and PCC)		0
0+000	36870	Heavy trucks	-	115	-		56	none	-	-	Average (of DGAC and PCC)		0
0+000	36870	Buses	-	17	-		56	none	-	-	Average (of DGAC and PCC)		0
0+000	36870	Motorcycles	-	16	-		56	none	-	-	Average (of DGAC and PCC)		0
0+000	36870	Auxiliary Vehicle	-	-	-		56	none	-	-	Average (of DGAC and PCC)		0
Roseglen St SB	Traffic direction:	In entry direction											
10+304	*1980*	*Total*	-	*132*	-	-	*none*	-	-		*Average (of DGAC and PCC)*		*0*
10+304	1980	Automobiles	-	76	-		48	none	-	-	Average (of DGAC and PCC)		0
10+304	1980	Medium trucks	-	47	-		48	none	-	-	Average (of DGAC and PCC)		0
10+304	1980	Heavy trucks	-	7	-		48	none	-	-	Average (of DGAC and PCC)		0
10+304	1980	Buses	-	1	-		48	none	-	-	Average (of DGAC and PCC)		0
10+304	1980	Motorcycles	-	1	-		48	none	-	-	Average (of DGAC and PCC)		0
10+304	1980	Auxiliary Vehicle	-	-	-		48	none	-	-	Average (of DGAC and PCC)		0
10+862	*1980*	*Total*	-	*132*	-	-	*none*	-	-		*Average (of DGAC and PCC)*		*0*
10+862	1980	Automobiles	-	76	-		48	none	-	-	Average (of DGAC and PCC)		0
10+862	1980	Medium trucks	-	47	-		48	none	-	-	Average (of DGAC and PCC)		0
10+862	1980	Heavy trucks	-	7	-		48	none	-	-	Average (of DGAC and PCC)		0
10+862	1980	Buses	-	1	-		48	none	-	-	Average (of DGAC and PCC)		0
10+862	1980	Motorcycles	-	1	-		48	none	-	-	Average (of DGAC and PCC)		0
10+862	1980	Auxiliary Vehicle	-	-	-		48	none	-	-	Average (of DGAC and PCC)		0
10+926	*1980*	*Total*	-	*132*	-	-	*none*	-	-		*Average (of DGAC and PCC)*		*0*
10+926	1980	Automobiles	-	76	-		48	none	-	-	Average (of DGAC and PCC)		0
10+926	1980	Medium trucks	-	47	-		48	none	-	-	Average (of DGAC and PCC)		0
10+926	1980	Heavy trucks	-	7	-		48	none	-	-	Average (of DGAC and PCC)		0
10+926	1980	Buses	-	1	-		48	none	-	-	Average (of DGAC and PCC)		0
10+926	1980	Motorcycles	-	1	-		48	none	-	-	Average (of DGAC and PCC)		0

10+926	1980	Auxiliary Vehicle	-	-	-		48	none	-	-	Average (of DGAC and PCC)		0
11+048	-							-	-	-	-	-	
0+000	*1980*	*Total*	-		*132*	-	-	*Traffic light*	*0*	-	*Average (of DGAC and PCC)*		*0*
0+000	1980	Automobiles	-		76	-		48	Traffic light	0	-	Average (of DGAC and PCC)	0
0+000	1980	Medium trucks	-		47	-		48	Traffic light	0	-	Average (of DGAC and PCC)	0
0+000	1980	Heavy trucks	-		7	-		48	Traffic light	0	-	Average (of DGAC and PCC)	0
0+000	1980	Buses	-		1	-		48	Traffic light	0	-	Average (of DGAC and PCC)	0
0+000	1980	Motorcycles	-		1	-		48	Traffic light	0	-	Average (of DGAC and PCC)	0
0+000	1980	Auxiliary Vehicle	-	-	-		48	Traffic light	0	-	Average (of DGAC and PCC)		0
Roseglen St NB	Traffic direction:	In entry direction											
10+304	*5835*	*Total*	-		*389*	-	-	*Traffic light*	*0*	-	*Average (of DGAC and PCC)*		*0*
10+304	5835	Automobiles	-		226	-		48	Traffic light	0	-	Average (of DGAC and PCC)	0
10+304	5835	Medium trucks	-		138	-		48	Traffic light	0	-	Average (of DGAC and PCC)	0
10+304	5835	Heavy trucks	-		19	-		48	Traffic light	0	-	Average (of DGAC and PCC)	0
10+304	5835	Buses	-		3	-		48	Traffic light	0	-	Average (of DGAC and PCC)	0
10+304	5835	Motorcycles	-		3	-		48	Traffic light	0	-	Average (of DGAC and PCC)	0
10+304	5835	Auxiliary Vehicle	-	-	-		48	Traffic light	0	-	Average (of DGAC and PCC)		0
10+430	*5835*	*Total*	-		*389*	-	-	*none*	-	-	*Average (of DGAC and PCC)*		*0*
10+430	5835	Automobiles	-		226	-		48	none	-	-	Average (of DGAC and PCC)	0
10+430	5835	Medium trucks	-		138	-		48	none	-	-	Average (of DGAC and PCC)	0
10+430	5835	Heavy trucks	-		19	-		48	none	-	-	Average (of DGAC and PCC)	0
10+430	5835	Buses	-		3	-		48	none	-	-	Average (of DGAC and PCC)	0
10+430	5835	Motorcycles	-		3	-		48	none	-	-	Average (of DGAC and PCC)	0
10+430	5835	Auxiliary Vehicle	-	-	-		48	none	-	-	Average (of DGAC and PCC)		0
10+489	*5835*	*Total*	-		*389*	-	-	*none*	-	-	*Average (of DGAC and PCC)*		*0*
10+489	5835	Automobiles	-		226	-		48	none	-	-	Average (of DGAC and PCC)	0
10+489	5835	Medium trucks	-		138	-		48	none	-	-	Average (of DGAC and PCC)	0
10+489	5835	Heavy trucks	-		19	-		48	none	-	-	Average (of DGAC and PCC)	0
10+489	5835	Buses	-		3	-		48	none	-	-	Average (of DGAC and PCC)	0
10+489	5835	Motorcycles	-		3	-		48	none	-	-	Average (of DGAC and PCC)	0
10+489	5835	Auxiliary Vehicle	-	-	-		48	none	-	-	Average (of DGAC and PCC)		0
11+054	-							-	-	-	-	-	
0+000	*5835*	*Total*	-		*389*	-	-	*none*	-	-	*Average (of DGAC and PCC)*		*0*
0+000	5835	Automobiles	-		226	-		48	none	-	-	Average (of DGAC and PCC)	0
0+000	5835	Medium trucks	-		138	-		48	none	-	-	Average (of DGAC and PCC)	0
0+000	5835	Heavy trucks	-		19	-		48	none	-	-	Average (of DGAC and PCC)	0
0+000	5835	Buses	-		3	-		48	none	-	-	Average (of DGAC and PCC)	0
0+000	5835	Motorcycles	-		3	-		48	none	-	-	Average (of DGAC and PCC)	0
0+000	5835	Auxiliary Vehicle	-	-	-		48	none	-	-	Average (of DGAC and PCC)		0
Roseglen St NB1	Traffic direction:	In entry direction											
10+304	*1980*	*Total*	-		*132*	-	-	*Traffic light*	*0*	-	*Average (of DGAC and PCC)*		*0*
10+304	1980	Automobiles	-		76	-		48	Traffic light	0	-	Average (of DGAC and PCC)	0
10+304	1980	Medium trucks	-		47	-		48	Traffic light	0	-	Average (of DGAC and PCC)	0
10+304	1980	Heavy trucks	-		7	-		48	Traffic light	0	-	Average (of DGAC and PCC)	0
10+304	1980	Buses	-		1	-		48	Traffic light	0	-	Average (of DGAC and PCC)	0
10+304	1980	Motorcycles	-		1	-		48	Traffic light	0	-	Average (of DGAC and PCC)	0
10+304	1980	Auxiliary Vehicle	-	-	-		48	Traffic light	0	-	Average (of DGAC and PCC)		0
10+644	*1980*	*Total*	-		*132*	-	-	*none*	-	-	*Average (of DGAC and PCC)*		*0*
10+644	1980	Automobiles	-		76	-		48	none	-	-	Average (of DGAC and PCC)	0
10+644	1980	Medium trucks	-		47	-		48	none	-	-	Average (of DGAC and PCC)	0
10+644	1980	Heavy trucks	-		7	-		48	none	-	-	Average (of DGAC and PCC)	0
10+644	1980	Buses	-		1	-		48	none	-	-	Average (of DGAC and PCC)	0
10+644	1980	Motorcycles	-		1	-		48	none	-	-	Average (of DGAC and PCC)	0
10+644	1980	Auxiliary Vehicle	-	-	-		48	none	-	-	Average (of DGAC and PCC)		0
10+734	*1980*	*Total*	-		*132*	-	-	*none*	-	-	*Average (of DGAC and PCC)*		*0*
10+734	1980	Automobiles	-		76	-		48	none	-	-	Average (of DGAC and PCC)	0
10+734	1980	Medium trucks	-		47	-		48	none	-	-	Average (of DGAC and PCC)	0
10+734	1980	Heavy trucks	-		7	-		48	none	-	-	Average (of DGAC and PCC)	0
10+734	1980	Buses	-		1	-		48	none	-	-	Average (of DGAC and PCC)	0
10+734	1980	Motorcycles	-		1	-		48	none	-	-	Average (of DGAC and PCC)	0
10+734	1980	Auxiliary Vehicle	-	-	-		48	none	-	-	Average (of DGAC and PCC)		0
11+141	-							-	-	-	-	-	

0+000	*1980*	*Total*	-	*132*	-	-	*none*	-	-	*Average (of DGAC and PCC)*		*0*
0+000	1980	Automobiles	-	76	-		48 none	-	-	Average (of DGAC and PCC)		0
0+000	1980	Medium trucks	-	47	-		48 none	-	-	Average (of DGAC and PCC)		0
0+000	1980	Heavy trucks	-	7	-		48 none	-	-	Average (of DGAC and PCC)		0
0+000	1980	Buses	-	1	-		48 none	-	-	Average (of DGAC and PCC)		0
0+000	1980	Motorcycles	-	1	-		48 none	-	-	Average (of DGAC and PCC)		0
0+000	1980	Auxiliary Vehicle	-	-	-		48 none	-	-	Average (of DGAC and PCC)		0
Durfee Ave NB	Traffic direction:	In entry direction										
10+304	*5835*	*Total*	-	*389*	-	-	*none*	-	-	*Average (of DGAC and PCC)*		*0*
10+304	5835	Automobiles	-	226	-		48 none	-	-	Average (of DGAC and PCC)		0
10+304	5835	Medium trucks	-	138	-		48 none	-	-	Average (of DGAC and PCC)		0
10+304	5835	Heavy trucks	-	19	-		48 none	-	-	Average (of DGAC and PCC)		0
10+304	5835	Buses	-	3	-		48 none	-	-	Average (of DGAC and PCC)		0
10+304	5835	Motorcycles	-	3	-		48 none	-	-	Average (of DGAC and PCC)		0
10+304	5835	Auxiliary Vehicle	-	-	-		48 none	-	-	Average (of DGAC and PCC)		0
10+709	*5835*	*Total*	-	*389*	-	-	*none*	-	-	*Average (of DGAC and PCC)*		*0*
10+709	5835	Automobiles	-	226	-		48 none	-	-	Average (of DGAC and PCC)		0
10+709	5835	Medium trucks	-	138	-		48 none	-	-	Average (of DGAC and PCC)		0
10+709	5835	Heavy trucks	-	19	-		48 none	-	-	Average (of DGAC and PCC)		0
10+709	5835	Buses	-	3	-		48 none	-	-	Average (of DGAC and PCC)		0
10+709	5835	Motorcycles	-	3	-		48 none	-	-	Average (of DGAC and PCC)		0
10+709	5835	Auxiliary Vehicle	-	-	-		48 none	-	-	Average (of DGAC and PCC)		0
10+819	*5835*	*Total*	-	*389*	-	-	*none*	-	-	*Average (of DGAC and PCC)*		*0*
10+819	5835	Automobiles	-	226	-		48 none	-	-	Average (of DGAC and PCC)		0
10+819	5835	Medium trucks	-	138	-		48 none	-	-	Average (of DGAC and PCC)		0
10+819	5835	Heavy trucks	-	19	-		48 none	-	-	Average (of DGAC and PCC)		0
10+819	5835	Buses	-	3	-		48 none	-	-	Average (of DGAC and PCC)		0
10+819	5835	Motorcycles	-	3	-		48 none	-	-	Average (of DGAC and PCC)		0
10+819	5835	Auxiliary Vehicle	-	-	-		48 none	-	-	Average (of DGAC and PCC)		0
11+146	-						-	-	-	-	-	
0+000	*5835*	*Total*	-	*389*	-	-	*Traffic light*	*0*	-	*Average (of DGAC and PCC)*		*0*
0+000	5835	Automobiles	-	226	-		48 Traffic light	0	-	Average (of DGAC and PCC)		0
0+000	5835	Medium trucks	-	138	-		48 Traffic light	0	-	Average (of DGAC and PCC)		0
0+000	5835	Heavy trucks	-	19	-		48 Traffic light	0	-	Average (of DGAC and PCC)		0
0+000	5835	Buses	-	3	-		48 Traffic light	0	-	Average (of DGAC and PCC)		0
0+000	5835	Motorcycles	-	3	-		48 Traffic light	0	-	Average (of DGAC and PCC)		0
0+000	5835	Auxiliary Vehicle	-	-	-		48 Traffic light	0	-	Average (of DGAC and PCC)		0
Durfee Ave SB (South)	Traffic direction:	In entry direction										
10+304	*7530*	*Total*	-	*502*	-	-	*none*	-	-	*Average (of DGAC and PCC)*		*0*
10+304	7530	Automobiles	-	292	-		40 none	-	-	Average (of DGAC and PCC)		0
10+304	7530	Medium trucks	-	178	-		40 none	-	-	Average (of DGAC and PCC)		0
10+304	7530	Heavy trucks	-	24	-		40 none	-	-	Average (of DGAC and PCC)		0
10+304	7530	Buses	-	4	-		40 none	-	-	Average (of DGAC and PCC)		0
10+304	7530	Motorcycles	-	4	-		40 none	-	-	Average (of DGAC and PCC)		0
10+304	7530	Auxiliary Vehicle	-	-	-		40 none	-	-	Average (of DGAC and PCC)		0
11+006	-						-	-	-	-	-	
0+000	*7530*	*Total*	-	*502*	-	-	*none*	-	-	*Average (of DGAC and PCC)*		*0*
0+000	7530	Automobiles	-	292	-		40 none	-	-	Average (of DGAC and PCC)		0
0+000	7530	Medium trucks	-	178	-		40 none	-	-	Average (of DGAC and PCC)		0
0+000	7530	Heavy trucks	-	24	-		40 none	-	-	Average (of DGAC and PCC)		0
0+000	7530	Buses	-	4	-		40 none	-	-	Average (of DGAC and PCC)		0
0+000	7530	Motorcycles	-	4	-		40 none	-	-	Average (of DGAC and PCC)		0
0+000	7530	Auxiliary Vehicle	-	-	-		40 none	-	-	Average (of DGAC and PCC)		0
Durfee Ave NB (South)	Traffic direction:	In entry direction										
10+304	-						-	-	-	-		0
11+002	-						-	-	-	-	-	
0+000	-						-	-	-	-		0
Gilman Rd SB	Traffic direction:	In entry direction										
10+304	*7050*	*Total*	-	*470*	-	-	*Traffic light*	*0*	-	*Average (of DGAC and PCC)*		*0*
10+304	7050	Automobiles	-	274	-		40 Traffic light	0	-	Average (of DGAC and PCC)		0
10+304	7050	Medium trucks	-	167	-		40 Traffic light	0	-	Average (of DGAC and PCC)		0
10+304	7050	Heavy trucks	-	22	-		40 Traffic light	0	-	Average (of DGAC and PCC)		0

10+304	7050	Buses	-	4	-		40	Traffic light	0	-	Average (of DGAC and PCC)		0
10+304	7050	Motorcycles	-	3	-		40	Traffic light	0	-	Average (of DGAC and PCC)		0
10+304	7050	Auxiliary Vehicle	-	-	-		40	Traffic light	0	-	Average (of DGAC and PCC)		0
11+254	-							-	-	-	-	-	
0+000	*7050*	*Total*	-	*470*	-	-		*none*	-	-	*Average (of DGAC and PCC)*		*0*
0+000	7050	Automobiles	-	274	-		40	none	-	-	Average (of DGAC and PCC)		0
0+000	7050	Medium trucks	-	167	-		40	none	-	-	Average (of DGAC and PCC)		0
0+000	7050	Heavy trucks	-	22	-		40	none	-	-	Average (of DGAC and PCC)		0
0+000	7050	Buses	-	4	-		40	none	-	-	Average (of DGAC and PCC)		0
0+000	7050	Motorcycles	-	3	-		40	none	-	-	Average (of DGAC and PCC)		0
0+000	7050	Auxiliary Vehicle	-	-	-		40	none	-	-	Average (of DGAC and PCC)		0
Gilman Rd NB	Traffic direction:	In entry direction											
10+304	*2310*	*Total*	-	*154*	-	-		*none*	-	-	*Average (of DGAC and PCC)*		*0*
10+304	2310	Automobiles	-	89	-		40	none	-	-	Average (of DGAC and PCC)		0
10+304	2310	Medium trucks	-	55	-		40	none	-	-	Average (of DGAC and PCC)		0
10+304	2310	Heavy trucks	-	8	-		40	none	-	-	Average (of DGAC and PCC)		0
10+304	2310	Buses	-	1	-		40	none	-	-	Average (of DGAC and PCC)		0
10+304	2310	Motorcycles	-	1	-		40	none	-	-	Average (of DGAC and PCC)		0
10+304	2310	Auxiliary Vehicle	-	-	-		40	none	-	-	Average (of DGAC and PCC)		0
11+260	-							-	-	-	-	-	
0+000	*2310*	*Total*	-	*154*	-	-		*Traffic light*	*0*	-	*Average (of DGAC and PCC)*		*0*
0+000	2310	Automobiles	-	89	-		40	Traffic light	0	-	Average (of DGAC and PCC)		0
0+000	2310	Medium trucks	-	55	-		40	Traffic light	0	-	Average (of DGAC and PCC)		0
0+000	2310	Heavy trucks	-	8	-		40	Traffic light	0	-	Average (of DGAC and PCC)		0
0+000	2310	Buses	-	1	-		40	Traffic light	0	-	Average (of DGAC and PCC)		0
0+000	2310	Motorcycles	-	1	-		40	Traffic light	0	-	Average (of DGAC and PCC)		0
0+000	2310	Auxiliary Vehicle	-	-	-		40	Traffic light	0	-	Average (of DGAC and PCC)		0
I-10 EB	Traffic direction:	In entry direction											
10+304	*132240*	*Total*	-	*8816*	-	-		*none*	-	-	*Average (of DGAC and PCC)*		*0*
10+304	132240	Automobiles	-	5147	-		105	none	-	-	Average (of DGAC and PCC)		0
10+304	132240	Medium trucks	-	3143	-		105	none	-	-	Average (of DGAC and PCC)		0
10+304	132240	Heavy trucks	-	412	-		105	none	-	-	Average (of DGAC and PCC)		0
10+304	132240	Buses	-	59	-		105	none	-	-	Average (of DGAC and PCC)		0
10+304	132240	Motorcycles	-	55	-		105	none	-	-	Average (of DGAC and PCC)		0
10+304	132240	Auxiliary Vehicle	-	-	-		105	none	-	-	Average (of DGAC and PCC)		0
12+635	*166215*	*Total*	-	*11081*	-	-		*none*	-	-	*Average (of DGAC and PCC)*		*0*
12+635	166215	Automobiles	-	6471	-		105	none	-	-	Average (of DGAC and PCC)		0
12+635	166215	Medium trucks	-	3951	-		105	none	-	-	Average (of DGAC and PCC)		0
12+635	166215	Heavy trucks	-	517	-		105	none	-	-	Average (of DGAC and PCC)		0
12+635	166215	Buses	-	73	-		105	none	-	-	Average (of DGAC and PCC)		0
12+635	166215	Motorcycles	-	69	-		105	none	-	-	Average (of DGAC and PCC)		0
12+635	166215	Auxiliary Vehicle	-	-	-		105	none	-	-	Average (of DGAC and PCC)		0
17+769	*127830*	*Total*	-	*8522*	-	-		*none*	-	-	*Average (of DGAC and PCC)*		*0*
17+769	127830	Automobiles	-	4976	-		105	none	-	-	Average (of DGAC and PCC)		0
17+769	127830	Medium trucks	-	3038	-		105	none	-	-	Average (of DGAC and PCC)		0
17+769	127830	Heavy trucks	-	398	-		105	none	-	-	Average (of DGAC and PCC)		0
17+769	127830	Buses	-	57	-		105	none	-	-	Average (of DGAC and PCC)		0
17+769	127830	Motorcycles	-	53	-		105	none	-	-	Average (of DGAC and PCC)		0
17+769	127830	Auxiliary Vehicle	-	-	-		105	none	-	-	Average (of DGAC and PCC)		0
18+525	*127830*	*Total*	-	*8522*	-	-		*none*	-	-	*Average (of DGAC and PCC)*		*0*
18+525	127830	Automobiles	-	4976	-		105	none	-	-	Average (of DGAC and PCC)		0
18+525	127830	Medium trucks	-	3038	-		105	none	-	-	Average (of DGAC and PCC)		0
18+525	127830	Heavy trucks	-	398	-		105	none	-	-	Average (of DGAC and PCC)		0
18+525	127830	Buses	-	57	-		105	none	-	-	Average (of DGAC and PCC)		0
18+525	127830	Motorcycles	-	53	-		105	none	-	-	Average (of DGAC and PCC)		0
18+525	127830	Auxiliary Vehicle	-	-	-		105	none	-	-	Average (of DGAC and PCC)		0
19+393	*127830*	*Total*	-	*8522*	-	-		*none*	-	-	*Average (of DGAC and PCC)*		*0*
19+393	127830	Automobiles	-	4976	-		105	none	-	-	Average (of DGAC and PCC)		0
19+393	127830	Medium trucks	-	3038	-		105	none	-	-	Average (of DGAC and PCC)		0
19+393	127830	Heavy trucks	-	398	-		105	none	-	-	Average (of DGAC and PCC)		0
19+393	127830	Buses	-	57	-		105	none	-	-	Average (of DGAC and PCC)		0
19+393	127830	Motorcycles	-	53	-		105	none	-	-	Average (of DGAC and PCC)		0

19+393	127830	Auxiliary Vehicle	-	-	-	105	none	-	-	Average (of DGAC and PCC)		0
20+123	-						-	-	-	-	-	
I-10 WB	Traffic direction:	In entry direction										
10+304	*138645*	*Total*	-	*9243*	-	-	*none*	-	-	*Average (of DGAC and PCC)*		*0*
10+304	138645	Automobiles	-	5397	-	105	none	-	-	Average (of DGAC and PCC)		0
10+304	138645	Medium trucks	-	3296	-	105	none	-	-	Average (of DGAC and PCC)		0
10+304	138645	Heavy trucks	-	432	-	105	none	-	-	Average (of DGAC and PCC)		0
10+304	138645	Buses	-	61	-	105	none	-	-	Average (of DGAC and PCC)		0
10+304	138645	Motorcycles	-	57	-	105	none	-	-	Average (of DGAC and PCC)		0
10+304	138645	Auxiliary Vehicle	-	-	-	105	none	-	-	Average (of DGAC and PCC)		0
12+623	*147285*	*Total*	-	*9819*	-	-	*none*	-	-	*Average (of DGAC and PCC)*		*0*
12+623	147285	Automobiles	-	5734	-	105	none	-	-	Average (of DGAC and PCC)		0
12+623	147285	Medium trucks	-	3501	-	105	none	-	-	Average (of DGAC and PCC)		0
12+623	147285	Heavy trucks	-	458	-	105	none	-	-	Average (of DGAC and PCC)		0
12+623	147285	Buses	-	65	-	105	none	-	-	Average (of DGAC and PCC)		0
12+623	147285	Motorcycles	-	61	-	105	none	-	-	Average (of DGAC and PCC)		0
12+623	147285	Auxiliary Vehicle	-	-	-	105	none	-	-	Average (of DGAC and PCC)		0
15+597	*129600*	*Total*	-	*8640*	-	-	*none*	-	-	*Average (of DGAC and PCC)*		*0*
15+597	129600	Automobiles	-	5045	-	105	none	-	-	Average (of DGAC and PCC)		0
15+597	129600	Medium trucks	-	3081	-	105	none	-	-	Average (of DGAC and PCC)		0
15+597	129600	Heavy trucks	-	403	-	105	none	-	-	Average (of DGAC and PCC)		0
15+597	129600	Buses	-	57	-	105	none	-	-	Average (of DGAC and PCC)		0
15+597	129600	Motorcycles	-	54	-	105	none	-	-	Average (of DGAC and PCC)		0
15+597	129600	Auxiliary Vehicle	-	-	-	105	none	-	-	Average (of DGAC and PCC)		0
20+122	-						-	-	-	-	-	
0+000	*129600*	*Total*	-	*8640*	-	-	*none*	-	-	*Average (of DGAC and PCC)*		*0*
0+000	129600	Automobiles	-	5045	-	105	none	-	-	Average (of DGAC and PCC)		0
0+000	129600	Medium trucks	-	3081	-	105	none	-	-	Average (of DGAC and PCC)		0
0+000	129600	Heavy trucks	-	403	-	105	none	-	-	Average (of DGAC and PCC)		0
0+000	129600	Buses	-	57	-	105	none	-	-	Average (of DGAC and PCC)		0
0+000	129600	Motorcycles	-	54	-	105	none	-	-	Average (of DGAC and PCC)		0
0+000	129600	Auxiliary Vehicle	-	-	-	105	none	-	-	Average (of DGAC and PCC)		0
Valley Blvd EB	Traffic direction:	In entry direction										
2+808	*42915*	*Total*	-	*2861*	-	-	*none*	-	-	*Average (of DGAC and PCC)*		*0*
2+808	42915	Automobiles	-	1671	-	56	none	-	-	Average (of DGAC and PCC)		0
2+808	42915	Medium trucks	-	1020	-	56	none	-	-	Average (of DGAC and PCC)		0
2+808	42915	Heavy trucks	-	134	-	56	none	-	-	Average (of DGAC and PCC)		0
2+808	42915	Buses	-	19	-	56	none	-	-	Average (of DGAC and PCC)		0
2+808	42915	Motorcycles	-	17	-	56	none	-	-	Average (of DGAC and PCC)		0
2+808	42915	Auxiliary Vehicle	-	-	-	56	none	-	-	Average (of DGAC and PCC)		0
3+202	*42915*	*Total*	-	*2861*	-	-	*Traffic light*	*0*	-	*Average (of DGAC and PCC)*		*0*
3+202	42915	Automobiles	-	1670	-	56	Traffic light	0	-	Average (of DGAC and PCC)		0
3+202	42915	Medium trucks	-	1020	-	56	Traffic light	0	-	Average (of DGAC and PCC)		0
3+202	42915	Heavy trucks	-	134	-	56	Traffic light	0	-	Average (of DGAC and PCC)		0
3+202	42915	Buses	-	19	-	56	Traffic light	0	-	Average (of DGAC and PCC)		0
3+202	42915	Motorcycles	-	18	-	56	Traffic light	0	-	Average (of DGAC and PCC)		0
3+202	42915	Auxiliary Vehicle	-	-	-	56	Traffic light	0	-	Average (of DGAC and PCC)		0
4+173	*39180*	*Total*	-	*2612*	-	-	*Traffic light*	*0*	-	*Average (of DGAC and PCC)*		*0*
4+173	39180	Automobiles	-	1524	-	56	Traffic light	0	-	Average (of DGAC and PCC)		0
4+173	39180	Medium trucks	-	931	-	56	Traffic light	0	-	Average (of DGAC and PCC)		0
4+173	39180	Heavy trucks	-	122	-	56	Traffic light	0	-	Average (of DGAC and PCC)		0
4+173	39180	Buses	-	18	-	56	Traffic light	0	-	Average (of DGAC and PCC)		0
4+173	39180	Motorcycles	-	17	-	56	Traffic light	0	-	Average (of DGAC and PCC)		0
4+173	39180	Auxiliary Vehicle	-	-	-	56	Traffic light	0	-	Average (of DGAC and PCC)		0
5+211	*29010*	*Total*	-	*1934*	-	-	*Traffic light*	*0*	-	*Average (of DGAC and PCC)*		*0*
5+211	29010	Automobiles	-	1129	-	56	Traffic light	0	-	Average (of DGAC and PCC)		0
5+211	29010	Medium trucks	-	689	-	56	Traffic light	0	-	Average (of DGAC and PCC)		0
5+211	29010	Heavy trucks	-	91	-	56	Traffic light	0	-	Average (of DGAC and PCC)		0
5+211	29010	Buses	-	13	-	56	Traffic light	0	-	Average (of DGAC and PCC)		0
5+211	29010	Motorcycles	-	12	-	56	Traffic light	0	-	Average (of DGAC and PCC)		0
5+211	29010	Auxiliary Vehicle	-	-	-	56	Traffic light	0	-	Average (of DGAC and PCC)		0
6+870	*29010*	*Total*	-	*1934*	-	-	*none*	-	-	*Average (of DGAC and PCC)*		*0*

6+870	29010	Automobiles	-		1129	-		56	none	-	-	Average (of DGAC and PCC)	0
6+870	29010	Medium trucks	-		689	-		56	none	-	-	Average (of DGAC and PCC)	0
6+870	29010	Heavy trucks	-		91	-		56	none	-	-	Average (of DGAC and PCC)	0
6+870	29010	Buses	-		13	-		56	none	-	-	Average (of DGAC and PCC)	0
6+870	29010	Motorcycles	-		12	-		56	none	-	-	Average (of DGAC and PCC)	0
6+870	29010	Auxiliary Vehicle	-	-	-			56	none	-	-	Average (of DGAC and PCC)	0
6+923	*41565*	*Total*	-		*2771*	-	-		*Traffic light*	*0*	-	*Average (of DGAC and PCC)*	*0*
6+923	41565	Automobiles	-		1617	-		56	Traffic light	0	-	Average (of DGAC and PCC)	0
6+923	41565	Medium trucks	-		987	-		56	Traffic light	0	-	Average (of DGAC and PCC)	0
6+923	41565	Heavy trucks	-		130	-		56	Traffic light	0	-	Average (of DGAC and PCC)	0
6+923	41565	Buses	-		19	-		56	Traffic light	0	-	Average (of DGAC and PCC)	0
6+923	41565	Motorcycles	-		18	-		56	Traffic light	0	-	Average (of DGAC and PCC)	0
6+923	41565	Auxiliary Vehicle	-	-	-			56	Traffic light	0	-	Average (of DGAC and PCC)	0
7+613	*39885*	*Total*	-		*2659*	-	-		*Traffic light*	*0*	-	*Average (of DGAC and PCC)*	*0*
7+613	39885	Automobiles	-		1552	-		56	Traffic light	0	-	Average (of DGAC and PCC)	0
7+613	39885	Medium trucks	-		948	-		56	Traffic light	0	-	Average (of DGAC and PCC)	0
7+613	39885	Heavy trucks	-		124	-		56	Traffic light	0	-	Average (of DGAC and PCC)	0
7+613	39885	Buses	-		18	-		56	Traffic light	0	-	Average (of DGAC and PCC)	0
7+613	39885	Motorcycles	-		17	-		56	Traffic light	0	-	Average (of DGAC and PCC)	0
7+613	39885	Auxiliary Vehicle	-	-	-			56	Traffic light	0	-	Average (of DGAC and PCC)	0
8+136	*39885*	*Total*	-		*2659*	-	-		*none*	-	-	*Average (of DGAC and PCC)*	*0*
8+136	39885	Automobiles	-		1552	-		56	none	-	-	Average (of DGAC and PCC)	0
8+136	39885	Medium trucks	-		948	-		56	none	-	-	Average (of DGAC and PCC)	0
8+136	39885	Heavy trucks	-		124	-		56	none	-	-	Average (of DGAC and PCC)	0
8+136	39885	Buses	-		18	-		56	none	-	-	Average (of DGAC and PCC)	0
8+136	39885	Motorcycles	-		17	-		56	none	-	-	Average (of DGAC and PCC)	0
8+136	39885	Auxiliary Vehicle	-	-	-			56	none	-	-	Average (of DGAC and PCC)	0
8+496	*39885*	*Total*	-		*2659*	-	-		*none*	-	-	*Average (of DGAC and PCC)*	*0*
8+496	39885	Automobiles	-		1552	-		56	none	-	-	Average (of DGAC and PCC)	0
8+496	39885	Medium trucks	-		948	-		56	none	-	-	Average (of DGAC and PCC)	0
8+496	39885	Heavy trucks	-		124	-		56	none	-	-	Average (of DGAC and PCC)	0
8+496	39885	Buses	-		18	-		56	none	-	-	Average (of DGAC and PCC)	0
8+496	39885	Motorcycles	-		17	-		56	none	-	-	Average (of DGAC and PCC)	0
8+496	39885	Auxiliary Vehicle	-	-	-			56	none	-	-	Average (of DGAC and PCC)	0
8+965	*39885*	*Total*	-		*2659*	-	-		*none*	-	-	*Average (of DGAC and PCC)*	*0*
8+965	39885	Automobiles	-		1552	-		40	none	-	-	Average (of DGAC and PCC)	0
8+965	39885	Medium trucks	-		948	-		40	none	-	-	Average (of DGAC and PCC)	0
8+965	39885	Heavy trucks	-		124	-		40	none	-	-	Average (of DGAC and PCC)	0
8+965	39885	Buses	-		18	-		40	none	-	-	Average (of DGAC and PCC)	0
8+965	39885	Motorcycles	-		17	-		40	none	-	-	Average (of DGAC and PCC)	0
8+965	39885	Auxiliary Vehicle	-	-	-			40	none	-	-	Average (of DGAC and PCC)	0
9+092	*31050*	*Total*	-		*2070*	-	-		*Traffic light*	*0*	-	*Average (of DGAC and PCC)*	*0*
9+092	31050	Automobiles	-		1208	-		56	Traffic light	0	-	Average (of DGAC and PCC)	0
9+092	31050	Medium trucks	-		738	-		56	Traffic light	0	-	Average (of DGAC and PCC)	0
9+092	31050	Heavy trucks	-		97	-		56	Traffic light	0	-	Average (of DGAC and PCC)	0
9+092	31050	Buses	-		14	-		56	Traffic light	0	-	Average (of DGAC and PCC)	0
9+092	31050	Motorcycles	-		13	-		56	Traffic light	0	-	Average (of DGAC and PCC)	0
9+092	31050	Auxiliary Vehicle	-	-	-			56	Traffic light	0	-	Average (of DGAC and PCC)	0
9+209	*31050*	*Total*	-		*2070*	-	-		*none*	-	-	*Average (of DGAC and PCC)*	*0*
9+209	31050	Automobiles	-		1208	-		56	none	-	-	Average (of DGAC and PCC)	0
9+209	31050	Medium trucks	-		738	-		56	none	-	-	Average (of DGAC and PCC)	0
9+209	31050	Heavy trucks	-		97	-		56	none	-	-	Average (of DGAC and PCC)	0
9+209	31050	Buses	-		14	-		56	none	-	-	Average (of DGAC and PCC)	0
9+209	31050	Motorcycles	-		13	-		56	none	-	-	Average (of DGAC and PCC)	0
9+209	31050	Auxiliary Vehicle	-	-	-			56	none	-	-	Average (of DGAC and PCC)	0
9+800	*32955*	*Total*	-		*2197*	-	-		*Traffic light*	*0*	-	*Average (of DGAC and PCC)*	*0*
9+800	32955	Automobiles	-		1282	-		56	Traffic light	0	-	Average (of DGAC and PCC)	0
9+800	32955	Medium trucks	-		783	-		56	Traffic light	0	-	Average (of DGAC and PCC)	0
9+800	32955	Heavy trucks	-		103	-		56	Traffic light	0	-	Average (of DGAC and PCC)	0
9+800	32955	Buses	-		15	-		56	Traffic light	0	-	Average (of DGAC and PCC)	0
9+800	32955	Motorcycles	-		14	-		56	Traffic light	0	-	Average (of DGAC and PCC)	0
9+800	32955	Auxiliary Vehicle	-	-	-			56	Traffic light	0	-	Average (of DGAC and PCC)	0

9+998	*32955*	*Total*	-	*2197*	-	-	*none*	-	-	*Average (of DGAC and PCC)*		*0*
9+998	32955	Automobiles	-	1282	-		56 none	-	-	Average (of DGAC and PCC)		0
9+998	32955	Medium trucks	-	783	-		56 none	-	-	Average (of DGAC and PCC)		0
9+998	32955	Heavy trucks	-	103	-		56 none	-	-	Average (of DGAC and PCC)		0
9+998	32955	Buses	-	15	-		56 none	-	-	Average (of DGAC and PCC)		0
9+998	32955	Motorcycles	-	14	-		56 none	-	-	Average (of DGAC and PCC)		0
9+998	32955	Auxiliary Vehicle	-	-	-		56 none	-	-	Average (of DGAC and PCC)		0
10+063	*32955*	*Total*	-	*2197*	-	-	*none*	-	-	*Average (of DGAC and PCC)*		*0*
10+063	32955	Automobiles	-	1282	-		56 none	-	-	Average (of DGAC and PCC)		0
10+063	32955	Medium trucks	-	783	-		56 none	-	-	Average (of DGAC and PCC)		0
10+063	32955	Heavy trucks	-	103	-		56 none	-	-	Average (of DGAC and PCC)		0
10+063	32955	Buses	-	15	-		56 none	-	-	Average (of DGAC and PCC)		0
10+063	32955	Motorcycles	-	14	-		56 none	-	-	Average (of DGAC and PCC)		0
10+063	32955	Auxiliary Vehicle	-	-	-		56 none	-	-	Average (of DGAC and PCC)		0
10+231	*26520*	*Total*	-	*1768*	-	-	*Traffic light*	*0*	-	*Average (of DGAC and PCC)*		*0*
10+231	26520	Automobiles	-	1032	-		56 Traffic light	0	-	Average (of DGAC and PCC)		0
10+231	26520	Medium trucks	-	630	-		56 Traffic light	0	-	Average (of DGAC and PCC)		0
10+231	26520	Heavy trucks	-	83	-		56 Traffic light	0	-	Average (of DGAC and PCC)		0
10+231	26520	Buses	-	12	-		56 Traffic light	0	-	Average (of DGAC and PCC)		0
10+231	26520	Motorcycles	-	11	-		56 Traffic light	0	-	Average (of DGAC and PCC)		0
10+231	26520	Auxiliary Vehicle	-	-	-		56 Traffic light	0	-	Average (of DGAC and PCC)		0
10+389	*26520*	*Total*	-	*1768*	-	-	*none*	-	-	*Average (of DGAC and PCC)*		*0*
10+389	26520	Automobiles	-	1032	-		56 none	-	-	Average (of DGAC and PCC)		0
10+389	26520	Medium trucks	-	630	-		56 none	-	-	Average (of DGAC and PCC)		0
10+389	26520	Heavy trucks	-	83	-		56 none	-	-	Average (of DGAC and PCC)		0
10+389	26520	Buses	-	12	-		56 none	-	-	Average (of DGAC and PCC)		0
10+389	26520	Motorcycles	-	11	-		56 none	-	-	Average (of DGAC and PCC)		0
10+389	26520	Auxiliary Vehicle	-	-	-		56 none	-	-	Average (of DGAC and PCC)		0
10+931	*38625*	*Total*	-	*2575*	-	-	*Traffic light*	*0*	-	*Average (of DGAC and PCC)*		*0*
10+931	38625	Automobiles	-	1503	-		56 Traffic light	0	-	Average (of DGAC and PCC)		0
10+931	38625	Medium trucks	-	918	-		56 Traffic light	0	-	Average (of DGAC and PCC)		0
10+931	38625	Heavy trucks	-	121	-		56 Traffic light	0	-	Average (of DGAC and PCC)		0
10+931	38625	Buses	-	17	-		56 Traffic light	0	-	Average (of DGAC and PCC)		0
10+931	38625	Motorcycles	-	16	-		56 Traffic light	0	-	Average (of DGAC and PCC)		0
10+931	38625	Auxiliary Vehicle	-	-	-		56 Traffic light	0	-	Average (of DGAC and PCC)		0
12+220	*35940*	*Total*	-	*2396*	-	-	*Traffic light*	*0*	-	*Average (of DGAC and PCC)*		*0*
12+220	35940	Automobiles	-	1399	-		56 Traffic light	0	-	Average (of DGAC and PCC)		0
12+220	35940	Medium trucks	-	854	-		56 Traffic light	0	-	Average (of DGAC and PCC)		0
12+220	35940	Heavy trucks	-	112	-		56 Traffic light	0	-	Average (of DGAC and PCC)		0
12+220	35940	Buses	-	16	-		56 Traffic light	0	-	Average (of DGAC and PCC)		0
12+220	35940	Motorcycles	-	15	-		56 Traffic light	0	-	Average (of DGAC and PCC)		0
12+220	35940	Auxiliary Vehicle	-	-	-		56 Traffic light	0	-	Average (of DGAC and PCC)		0
12+785	-						-	-	-	-	-	
0+000	*35940*	*Total*	-	*2396*	-	-	*none*	-	-	*Average (of DGAC and PCC)*		*0*
0+000	35940	Automobiles	-	1399	-		56 none	-	-	Average (of DGAC and PCC)		0
0+000	35940	Medium trucks	-	854	-		56 none	-	-	Average (of DGAC and PCC)		0
0+000	35940	Heavy trucks	-	112	-		56 none	-	-	Average (of DGAC and PCC)		0
0+000	35940	Buses	-	16	-		56 none	-	-	Average (of DGAC and PCC)		0
0+000	35940	Motorcycles	-	15	-		56 none	-	-	Average (of DGAC and PCC)		0
0+000	35940	Auxiliary Vehicle	-	-	-		56 none	-	-	Average (of DGAC and PCC)		0
Valley Mall NB	Traffic direction:	In entry direction										
2+808	*3795*	*Total*	-	*253*	-	-	*none*	-	-	*Average (of DGAC and PCC)*		*0*
2+808	3795	Automobiles	-	147	-		40 none	-	-	Average (of DGAC and PCC)		0
2+808	3795	Medium trucks	-	90	-		40 none	-	-	Average (of DGAC and PCC)		0
2+808	3795	Heavy trucks	-	12	-		40 none	-	-	Average (of DGAC and PCC)		0
2+808	3795	Buses	-	2	-		40 none	-	-	Average (of DGAC and PCC)		0
2+808	3795	Motorcycles	-	2	-		40 none	-	-	Average (of DGAC and PCC)		0
2+808	3795	Auxiliary Vehicle	-	-	-		40 none	-	-	Average (of DGAC and PCC)		0
3+305	*3795*	*Total*	-	*253*	-	-	*none*	-	-	*Average (of DGAC and PCC)*		*0*
3+305	3795	Automobiles	-	147	-		40 none	-	-	Average (of DGAC and PCC)		0
3+305	3795	Medium trucks	-	90	-		40 none	-	-	Average (of DGAC and PCC)		0
3+305	3795	Heavy trucks	-	12	-		40 none	-	-	Average (of DGAC and PCC)		0

3+305		3795	Buses	-		2	-		40	none	-	-	Average (of DGAC and PCC)	0
3+305		3795	Motorcycles	-		2	-		40	none	-	-	Average (of DGAC and PCC)	0
3+305		3795	Auxiliary Vehicle	-	-	-			40	none	-	-	Average (of DGAC and PCC)	0
3+829		*3795*	*Total*	-		*253*	-	-		*none*	-	-	*Average (of DGAC and PCC)*	*0*
3+829		3795	Automobiles	-		147	-		40	none	-	-	Average (of DGAC and PCC)	0
3+829		3795	Medium trucks	-		90	-		40	none	-	-	Average (of DGAC and PCC)	0
3+829		3795	Heavy trucks	-		12	-		40	none	-	-	Average (of DGAC and PCC)	0
3+829		3795	Buses	-		2	-		40	none	-	-	Average (of DGAC and PCC)	0
3+829		3795	Motorcycles	-		2	-		40	none	-	-	Average (of DGAC and PCC)	0
3+829		3795	Auxiliary Vehicle	-	-	-			40	none	-	-	Average (of DGAC and PCC)	0
3+974	-									-	-	-	-	-
I-10 EB Ramp		Traffic direction:	In entry direction											
7+811		*13995*	*Total*	-		*933*	-	-		*On ramp*	*0*	-	*Average (of DGAC and PCC)*	*0*
7+811		13995	Automobiles	-		544	-		64	On ramp	0	-	Average (of DGAC and PCC)	0
7+811		13995	Medium trucks	-		332	-		64	On ramp	0	-	Average (of DGAC and PCC)	0
7+811		13995	Heavy trucks	-		44	-		64	On ramp	0	-	Average (of DGAC and PCC)	0
7+811		13995	Buses	-		7	-		64	On ramp	0	-	Average (of DGAC and PCC)	0
7+811		13995	Motorcycles	-		6	-		64	On ramp	0	-	Average (of DGAC and PCC)	0
7+811		13995	Auxiliary Vehicle	-	-	-			64	On ramp	0	-	Average (of DGAC and PCC)	0
7+915		*13065*	*Total*	-		*871*	-	-		*On ramp*	*0*	-	*Average (of DGAC and PCC)*	*0*
7+915		13065	Automobiles	-		508	-		64	On ramp	0	-	Average (of DGAC and PCC)	0
7+915		13065	Medium trucks	-		310	-		64	On ramp	0	-	Average (of DGAC and PCC)	0
7+915		13065	Heavy trucks	-		41	-		64	On ramp	0	-	Average (of DGAC and PCC)	0
7+915		13065	Buses	-		6	-		64	On ramp	0	-	Average (of DGAC and PCC)	0
7+915		13065	Motorcycles	-		6	-		64	On ramp	0	-	Average (of DGAC and PCC)	0
7+915		13065	Auxiliary Vehicle	-	-	-			64	On ramp	0	-	Average (of DGAC and PCC)	0
8+028		*13995*	*Total*	-		*933*	-	-		*On ramp*	*0*	-	*Average (of DGAC and PCC)*	*0*
8+028		13995	Automobiles	-		544	-		64	On ramp	0	-	Average (of DGAC and PCC)	0
8+028		13995	Medium trucks	-		332	-		64	On ramp	0	-	Average (of DGAC and PCC)	0
8+028		13995	Heavy trucks	-		44	-		64	On ramp	0	-	Average (of DGAC and PCC)	0
8+028		13995	Buses	-		7	-		64	On ramp	0	-	Average (of DGAC and PCC)	0
8+028		13995	Motorcycles	-		6	-		64	On ramp	0	-	Average (of DGAC and PCC)	0
8+028		13995	Auxiliary Vehicle	-	-	-			64	On ramp	0	-	Average (of DGAC and PCC)	0
8+109	-									-	-	-	-	-
I-10 EB Ramp 2		Traffic direction:	In entry direction											
7+811		*21480*	*Total*	-		*1432*	-	-		*On ramp*	*0*	-	*Average (of DGAC and PCC)*	*0*
7+811		21480	Automobiles	-		836	-		64	On ramp	0	-	Average (of DGAC and PCC)	0
7+811		21480	Medium trucks	-		510	-		64	On ramp	0	-	Average (of DGAC and PCC)	0
7+811		21480	Heavy trucks	-		67	-		64	On ramp	0	-	Average (of DGAC and PCC)	0
7+811		21480	Buses	-		10	-		64	On ramp	0	-	Average (of DGAC and PCC)	0
7+811		21480	Motorcycles	-		9	-		64	On ramp	0	-	Average (of DGAC and PCC)	0
7+811		21480	Auxiliary Vehicle	-	-	-			64	On ramp	0	-	Average (of DGAC and PCC)	0
7+936		*20970*	*Total*	-		*1398*	-	-		*On ramp*	*0*	-	*Average (of DGAC and PCC)*	*0*
7+936		20970	Automobiles	-		815	-		64	On ramp	0	-	Average (of DGAC and PCC)	0
7+936		20970	Medium trucks	-		498	-		64	On ramp	0	-	Average (of DGAC and PCC)	0
7+936		20970	Heavy trucks	-		66	-		64	On ramp	0	-	Average (of DGAC and PCC)	0
7+936		20970	Buses	-		10	-		64	On ramp	0	-	Average (of DGAC and PCC)	0
7+936		20970	Motorcycles	-		9	-		64	On ramp	0	-	Average (of DGAC and PCC)	0
7+936		20970	Auxiliary Vehicle	-	-	-			64	On ramp	0	-	Average (of DGAC and PCC)	0
8+134	-									-	-	-	-	-
Olney St WB		Traffic direction:	In entry direction											
7+811		*1665*	*Total*	-		*111*	-	-		*none*	-	-	*Average (of DGAC and PCC)*	*0*
7+811		1665	Automobiles	-		64	-		40	none	-	-	Average (of DGAC and PCC)	0
7+811		1665	Medium trucks	-		39	-		40	none	-	-	Average (of DGAC and PCC)	0
7+811		1665	Heavy trucks	-		6	-		40	none	-	-	Average (of DGAC and PCC)	0
7+811		1665	Buses	-		1	-		40	none	-	-	Average (of DGAC and PCC)	0
7+811		1665	Motorcycles	-		1	-		40	none	-	-	Average (of DGAC and PCC)	0
7+811		1665	Auxiliary Vehicle	-	-	-			40	none	-	-	Average (of DGAC and PCC)	0
7+923	-									-	-	-	-	-
I-10 WB Ramp		Traffic direction:	In entry direction											
7+811		*525*	*Total*	-		*35*	-	-		*On ramp*	*0*	*100*	*Average (of DGAC and PCC)*	*0*
7+811		525	Automobiles	-		19	-		56	On ramp	0	100	Average (of DGAC and PCC)	0

7+811		525	Medium trucks	-		12	-	56	On ramp	0	100	Average (of DGAC and PCC)	0
7+811		525	Heavy trucks	-		2	-	56	On ramp	0	100	Average (of DGAC and PCC)	0
7+811		525	Buses	-		1	-	56	On ramp	0	100	Average (of DGAC and PCC)	0
7+811		525	Motorcycles	-		1	-	56	On ramp	0	100	Average (of DGAC and PCC)	0
7+811		525	Auxiliary Vehicle	-	-	-		56	On ramp	0	100	Average (of DGAC and PCC)	0
7+903	-							-	-	-	-	-	

05360 Flair Spectrum Specific Plan
Year 2035 No Project Buildout
Receiver Spectra

No.	Name	Floor	Time slice	50 Hz	63 Hz	80 Hz	100 Hz	125 Hz	160 Hz	200 Hz	250 Hz	315 Hz	400 Hz	500 Hz	630 Hz	800 Hz	1 kHz	1 kHz	2 kHz	2 kHz	2 kHz	3 kHz	4 kHz	5 kHz	6 kHz	8 kHz	10 kHz
1	SE of Rosemead Boulevard at I-10	GF	Day	40.7	47.9	52.4	55	56.7	58.2	58.7	55	52.1	50.6	53.1	55.3	55.1	56.6	56.6	57.4	57.2	57.7	57.8	55.3	52.9	50.3	47	42.2
1	SE of Rosemead Boulevard at I-10	GF	Night	0	0	0	0	0	0	0	0	0	0	0	0	0	0	0	0	0	0	0	0	0	0	0	0
2	NE corner of Aerojet and Telstar	GF	Day	41.4	47.5	51.6	53.9	55.5	56.8	57.1	53.3	51.5	50.2	50.7	52.3	52.2	53.4	52.4	53.3	52.9	53.5	54.4	53.5	52.1	49	45.8	41.2
2	NE corner of Aerojet and Telstar	GF	Night	0	0	0	0	0	0	0	0	0	0	0	0	0	0	0	0	0	0	0	0	0	0	0	0
3	NE corner of Peck and Garvey	GF	Day	42.5	48	51.6	53.8	55.3	56.5	57	55	53.4	51.5	51.7	53.4	53.3	54.8	54.1	54.6	53.6	53.7	53.9	51.9	50.5	46.7	43.7	39.6
3	NE corner of Peck and Garvey	GF	Night	0	0	0	0	0	0	0	0	0	0	0	0	0	0	0	0	0	0	0	0	0	0	0	0
4	NE corner of Peck and Ramona	GF	Day	41.7	47.2	50.7	52.8	54.2	55.4	55.9	53.8	51.9	49.4	49.6	51.5	51.6	53.2	52.9	53.6	52.7	52.4	53.1	51.2	49.2	45.7	42.7	38.7
4	NE corner of Peck and Ramona	GF	Night	0	0	0	0	0	0	0	0	0	0	0	0	0	0	0	0	0	0	0	0	0	0	0	0
5	NE corner of Roseglen and Lower Azusa	GF	Day	37.8	43.1	46.5	48.5	49.8	51	51.4	49.7	47.3	43.8	43.3	45.6	46.3	48.3	48.3	49.4	48.8	48.4	48.4	47.5	45	41.9	38.9	35.1
5	NE corner of Roseglen and Lower Azusa	GF	Night	0	0	0	0	0	0	0	0	0	0	0	0	0	0	0	0	0	0	0	0	0	0	0	0
6	NE corner of Rosemead and Lower Azusa	GF	Day	41.6	47.3	51	53.2	54.6	55.9	56.5	55.3	53.7	51.5	51.2	53.2	53.6	55.3	54.6	55.3	54.1	53.9	53.5	51.6	49.8	46.1	43.1	39.2
6	NE corner of Rosemead and Lower Azusa	GF	Night	0	0	0	0	0	0	0	0	0	0	0	0	0	0	0	0	0	0	0	0	0	0	0	0
7	NE corner of Rosemead and Rush	GF	Day	40.3	46.1	49.8	52	53.5	54.7	55.2	53.4	51.2	48.1	47.9	50.2	50.8	52.8	52.7	53.7	52.9	52.5	52.6	50.9	49.1	45.6	42.6	38.6
7	NE corner of Rosemead and Rush	GF	Night	0	0	0	0	0	0	0	0	0	0	0	0	0	0	0	0	0	0	0	0	0	0	0	0
8	NE corner of Santa Anita and Valley	GF	Day	42.4	48.2	52	54.2	55.7	56.9	57.4	55.9	54.1	52.1	52.2	53.8	54	55.5	54.8	55.4	54.5	54.7	54.7	52.3	50.9	47.3	44.3	40.2
8	NE corner of Santa Anita and Valley	GF	Night	0	0	0	0	0	0	0	0	0	0	0	0	0	0	0	0	0	0	0	0	0	0	0	0
9	NE corner of Tyler and Valley	GF	Day	41.3	46.7	50.4	52.7	54.2	55.3	55.7	52.8	50.5	47.9	48.3	50.1	50.1	51.6	51.6	52.4	52	51.9	52.7	51.7	49.2	46	43	38.8
9	NE corner of Tyler and Valley	GF	Night	0	0	0	0	0	0	0	0	0	0	0	0	0	0	0	0	0	0	0	0	0	0	0	0
10	NE corner of Walnut Grove and Garvey	GF	Day	40.2	45.9	49.6	51.8	53.2	54.4	54.8	52.1	49.6	46.2	46.3	48.6	49.1	51	51.1	52.2	51.7	51.5	51.5	50.4	48.5	45.4	42.4	38.3
10	NE corner of Walnut Grove and Garvey	GF	Night	0	0	0	0	0	0	0	0	0	0	0	0	0	0	0	0	0	0	0	0	0	0	0	0
11	NE corner of Walnut Grove and Valley	GF	Day	40.6	46.3	49.9	52.1	53.5	54.7	55.1	52.6	50.3	47.3	47.4	49.5	49.9	51.8	51.7	52.6	51.9	51.6	52	50.6	48.6	45.4	42.4	38.3
11	NE corner of Walnut Grove and Valley	GF	Night	0	0	0	0	0	0	0	0	0	0	0	0	0	0	0	0	0	0	0	0	0	0	0	0
12	NE of San Gabriel at I-10	GF	Day	40.8	47.4	51.6	54.1	55.9	57.4	58.2	56.1	54	52.1	53.9	56.2	56.3	57.9	57.6	58.3	57.5	57.2	56.5	54.2	52.6	48.9	45.6	41.1
12	NE of San Gabriel at I-10	GF	Night	0	0	0	0	0	0	0	0	0	0	0	0	0	0	0	0	0	0	0	0	0	0	0	0
13	NW Corner of Aerojet and Telstar	GF	Day	42.8	48.9	53	55.5	57	58.3	58.8	56.4	54.9	53.8	54.4	55.9	55.5	56.5	55.3	56.1	55.3	55.5	56.2	54.9	53.3	50.4	47.2	42.8
13	NW Corner of Aerojet and Telstar	GF	Night	0	0	0	0	0	0	0	0	0	0	0	0	0	0	0	0	0	0	0	0	0	0	0	0
14	NW corner of Baldwin and Olive	GF	Day	37.4	42.6	46	48	49.3	50.4	50.7	48.1	45.4	41.8	41.9	44.2	44.6	46.5	46.7	47.8	47.5	47.4	47.3	46.7	44.5	41.5	38.5	34.6
14	NW corner of Baldwin and Olive	GF	Night	0	0	0	0	0	0	0	0	0	0	0	0	0	0	0	0	0	0	0	0	0	0	0	0
15	NW corner of Glendon and Rosemead	GF	Day	43.6	49.6	53.6	55.9	57.5	58.8	59.5	57.9	56.7	55.4	55.9	57.5	57.4	58.7	57.6	58.1	57.2	56.7	56.6	55.2	53.4	50.1	47	42.6
15	NW corner of Glendon and Rosemead	GF	Night	0	0	0	0	0	0	0	0	0	0	0	0	0	0	0	0	0	0	0	0	0	0	0	0
16	NW corner of Merced and Garvey	GF	Day	39.2	44.9	48.6	50.7	52.2	53.4	53.7	49.3	46.5	43.2	43.6	45.8	46.1	48	48.1	49.3	49.2	49.5	49.5	48.1	47.1	43.7	40.7	36.5
16	NW corner of Merced and Garvey	GF	Night	0	0	0	0	0	0	0	0	0	0	0	0	0	0	0	0	0	0	0	0	0	0	0	0
17	NW corner of Peck and Lower Azusa	GF	Day	40.2	45.5	48.9	50.9	52.3	53.4	53.8	51.7	49.1	45.9	46.3	48.4	48.6	50.4	50.5	51.6	51.2	51	50.7	50.3	48	44.9	41.9	38
17	NW corner of Peck and Lower Azusa	GF	Night	0	0	0	0	0	0	0	0	0	0	0	0	0	0	0	0	0	0	0	0	0	0	0	0
18	NW corner of Rio Hondo and Telstar	GF	Day	40.6	46.5	50.5	52.8	54.4	55.7	56.2	52.6	51.9	51.3	52	53.4	52.8	53.7	52.3	52.4	51	51.4	52.3	51.4	50.5	47.4	44.2	39.9
18	NW corner of Rio Hondo and Telstar	GF	Night	0	0	0	0	0	0	0	0	0	0	0	0	0	0	0	0	0	0	0	0	0	0	0	0
19	NW corner of San Gabriel and Valley	GF	Day	42.2	47.6	51.1	53.2	54.6	55.8	56.4	55.2	53.5	51.3	51.1	52.9	53.1	54.8	54	54.7	53.9	53.5	53.2	51.4	50.2	46.2	43.3	39.5
19	NW corner of San Gabriel and Valley	GF	Night	0	0	0	0	0	0	0	0	0	0	0	0	0	0	0	0	0	0	0	0	0	0	0	0
20	NW corner of Tyler and Garvey	GF	Day	42.5	47.6	51	53.1	54.6	55.7	56.1	53.3	51.3	49	49.2	50.9	50.9	52.4	51.9	52.6	51.9	52.1	52.6	51.2	49.8	46.2	43.2	39.1
20	NW corner of Tyler and Garvey	GF	Night	0	0	0	0	0	0	0	0	0	0	0	0	0	0	0	0	0	0	0	0	0	0	0	0
21	NW corner of Tyler and Ramona	GF	Day	41.1	46.5	50.2	52.3	53.8	55	55.3	50.8	49	47.5	48.5	50	49.3	50.4	49.8	50.4	49.9	50.6	51.8	50.5	49.5	46.1	42.9	38.5
21	NW corner of Tyler and Ramona	GF	Night	0	0	0	0	0	0	0	0	0	0	0	0	0	0	0	0	0	0	0	0	0	0	0	0
22	NW corner of Valley and Garvey	GF	Day	41.4	47	50.7	52.9	54.4	55.7	56.1	53.5	51.7	49.6	49.6	51.4	51.7	53.3	52.6	53.4	52.8	52.8	52.7	51.3	50.4	46.7	43.6	39.3
22	NW corner of Valley and Garvey	GF	Night	0	0	0	0	0	0	0	0	0	0	0	0	0	0	0	0	0	0	0	0	0	0	0	0
23	NW of Santa Anita at I-10	GF	Day	42.6	49.3	53.6	56.1	58	59.6	60.4	58.8	57.3	56	57.7	59.8	59.7	61.2	60.8	61.2	60.1	59.3	58.3	56.3	54.7	51	47.6	43.1
23	NW of Santa Anita at I-10	GF	Night	0	0	0	0	0	0	0	0	0	0	0	0	0	0	0	0	0	0	0	0	0	0	0	0
24	SE corner of Aerojet and Flair	GF	Day	41.8	48.5	52.9	55.5	57.3	58.9	59.7	57.8	56.4	55.7	57.8	59.8	59.2	60.4	60	60.2	59.2	58.4	57.4	55.6	54	50.6	47.2	42.5
24	SE corner of Aerojet and Flair	GF	Night	0	0	0	0	0	0	0	0	0	0	0	0	0	0	0	0	0	0	0	0	0	0	0	0
25	SE corner of Baldwin and Valley	GF	Day	41.1	47.2	51.2	53.6	55.1	56.3	56.7	53.9	51.5	48.6	48.6	50.7	51.2	52.9	52.9	53.9	53.5	53.5	53.9	52.1	50.7	47	43.9	39.6
25	SE corner of Baldwin and Valley	GF	Night	0	0	0	0	0	0	0	0	0	0	0	0	0	0	0	0	0	0	0	0	0	0	0	0
26	SE corner of Chico and Garvey	GF	Day	40.4	46	49.6	51.7	53.1	54.3	54.8	52.3	50.5	48	47.9	49.7	50	51.7	51.2	51.8	50.8	50.9	51.3	49.2	47.7	44.2	41.2	37.2
26	SE corner of Chico and Garvey	GF	Night	0	0	0	0	0	0	0	0	0	0	0	0	0	0	0	0	0	0	0	0	0	0	0	0
27	SE corner of Rosemead and Garvey	GF	Day	42.1	47.8	51.6	53.8	55.3	56.5	57	54.8	52.8	50.4	50.6	52.5	52.7	54.3	53.9	54.7	54.2	54.4	54.1	52.3	51.1	47.5	44.5	40.4
27	SE corner of Rosemead and Garvey	GF	Night	0	0	0	0	0	0	0	0	0	0	0	0	0	0	0	0	0	0	0	0	0	0	0	0
28	SE corner of Temple City at Loftus	GF	Day	42.6	48.3	52.2	54.5	56.1	57.5	58.1	55.2	53.5	52.6	54.1	55.9	55.2	56.3	55.5	55.8	55.3	55.6	56	54	52.3	48.9	45.6	41.1
28	SE corner of Temple City at Loftus	GF	Night	0	0	0	0	0	0	0	0	0	0	0	0	0	0	0	0	0	0	0	0	0	0	0	0
29	SE corner of Temple City at Valley	GF	Day	41	46.9	50.8	53	54.5	55.7	56	53.4	51.1	48.2	48.3	50.4	50.7	52.4	52.4	53.4	53	52.8	53.1	51.9	50	46.7	43.6	39.3
29	SE corner of Temple City at Valley	GF	Night	0	0	0	0	0	0	0	0	0	0	0	0	0	0	0	0	0	0	0	0	0	0	0	0

30	South of Santa Anita at Tyler	GF	Day	42.5	47.4	50.6	52.5	53.9	55	55.4	53.6	51.4	48.5	48.3	50.2	50.6	52.3	52	52.9	52	52	52.6	50.8	48.6	45.2	42.4	38.7
30	South of Santa Anita at Tyler	GF	Night	0	0	0	0	0	0	0	0	0	0	0	0	0	0	0	0	0	0	0	0	0	0	0	0
31	SW corner of Baldwin and Lower Azusa	GF	Day	41.5	47	50.5	52.6	54	55.2	55.7	54.1	52.1	49.4	49.1	51.1	51.7	53.5	53.1	53.8	52.7	52.6	53.1	50.9	49.1	45.5	42.5	38.5
31	SW corner of Baldwin and Lower Azusa	GF	Night	0	0	0	0	0	0	0	0	0	0	0	0	0	0	0	0	0	0	0	0	0	0	0	0
32	SW corner of Durfee and Ramona	GF	Day	39	44.3	47.7	49.8	51.2	52.4	52.9	51.1	49.2	46.5	46.1	48.1	48.6	50.4	50	50.7	49.7	49.7	50	47.8	46.1	42.7	39.8	35.9
32	SW corner of Durfee and Ramona	GF	Night	0	0	0	0	0	0	0	0	0	0	0	0	0	0	0	0	0	0	0	0	0	0	0	0
33	SW corner of Fletcher and Flair	GF	Day	42.7	49.3	53.7	56.3	58.2	59.9	60.9	60.1	59.7	59.5	61.4	63.2	62.4	63.4	62.6	62.4	61	59.6	58.6	56.5	54	51	47.7	43.3
33	SW corner of Fletcher and Flair	GF	Night	0	0	0	0	0	0	0	0	0	0	0	0	0	0	0	0	0	0	0	0	0	0	0	0
34	SW corner of Gilman and Ramona	GF	Day	39.5	44.7	48.2	50.2	51.6	52.8	53.4	52.3	50.5	48	47.5	49.4	49.9	51.7	51	51.7	50.6	50.6	50.4	48.3	46.7	42.8	39.9	36.2
34	SW corner of Gilman and Ramona	GF	Night	0	0	0	0	0	0	0	0	0	0	0	0	0	0	0	0	0	0	0	0	0	0	0	0
35	SW corner of Merced and Garvey	GF	Day	39.1	44.7	48.3	50.5	51.9	53.1	53.4	49.5	46.8	43.7	44.1	46.2	46.4	48.2	48.3	49.4	49.2	49.4	49.4	47.9	46.9	43.4	40.4	36.4
35	SW corner of Merced and Garvey	GF	Night	0	0	0	0	0	0	0	0	0	0	0	0	0	0	0	0	0	0	0	0	0	0	0	0
36	SW corner of Peck and Garvey	GF	Day	42.3	47.8	51.4	53.5	54.9	56.2	56.7	54.9	53.5	51.7	52	53.6	53.5	54.8	54	54.5	53.5	53.4	53.3	51.5	50.1	46.4	43.4	39.5
36	SW corner of Peck and Garvey	GF	Night	0	0	0	0	0	0	0	0	0	0	0	0	0	0	0	0	0	0	0	0	0	0	0	0
37	SW corner of Rio Hondo and Flair	GF	Day	41.1	47.8	52.3	54.8	56.7	58.3	59.1	56.9	55.4	54.8	57.2	59.1	58.5	59.6	59.2	59.4	58.5	57.8	56.8	54.7	53.4	49.8	46.4	41.8
37	SW corner of Rio Hondo and Flair	GF	Night	0	0	0	0	0	0	0	0	0	0	0	0	0	0	0	0	0	0	0	0	0	0	0	0
38	SW corner of Rosemead and Las Tunas Dr	GF	Day	40.9	46.3	49.8	51.9	53.3	54.4	54.9	53.2	50.8	47.8	47.9	50.1	50.5	52.3	52.3	53.3	52.6	52.3	52.3	51.3	48.9	45.8	42.8	38.9
38	SW corner of Rosemead and Las Tunas Dr	GF	Night	0	0	0	0	0	0	0	0	0	0	0	0	0	0	0	0	0	0	0	0	0	0	0	0
39	SW corner of Rosemead and Valley	GF	Day	43.3	49.1	52.8	54.9	56.4	57.7	58.4	57.3	56.1	54.3	54.3	56	56.2	57.7	56.6	57.2	56.1	55.6	55.1	53.1	51.6	47.9	45	41
39	SW corner of Rosemead and Valley	GF	Night	0	0	0	0	0	0	0	0	0	0	0	0	0	0	0	0	0	0	0	0	0	0	0	0
40	SW corner of Santa Anita and Garvey	GF	Day	41.6	47.1	50.6	52.8	54.2	55.4	55.9	53.5	51.4	48.9	49.2	51	51.1	52.7	52.5	53.2	52.4	52.1	52.7	51.1	49	45.6	42.6	38.6
40	SW corner of Santa Anita and Garvey	GF	Night	0	0	0	0	0	0	0	0	0	0	0	0	0	0	0	0	0	0	0	0	0	0	0	0
41	SW corner of Santa Anita and Lower Azusa	GF	Day	42.1	46.9	50.2	52.1	53.4	54.5	55	53.4	51.3	48.6	48.3	50.2	50.6	52.4	51.9	52.7	51.9	52.1	52.1	50.6	48.6	45.1	42.2	38.5
41	SW corner of Santa Anita and Lower Azusa	GF	Night	0	0	0	0	0	0	0	0	0	0	0	0	0	0	0	0	0	0	0	0	0	0	0	0
42	SW corner of Telstar and Flair	GF	Day	43.1	49.6	53.9	56.4	58.3	60	61	60	59.4	59.2	61	62.8	62.1	63.1	62.3	62.2	60.8	59.5	58.5	56.6	54.2	51.1	47.8	43.4
42	SW corner of Telstar and Flair	GF	Night	0	0	0	0	0	0	0	0	0	0	0	0	0	0	0	0	0	0	0	0	0	0	0	0
43	SW corner of Temple City and Lower Azusa	GF	Day	39.5	45.4	49.3	51.6	53.1	54.3	54.6	51.8	49.1	45.7	46	48.2	48.7	50.6	50.8	52	51.9	52	51.9	50.6	49.3	45.8	42.7	38.4
43	SW corner of Temple City and Lower Azusa	GF	Night	0	0	0	0	0	0	0	0	0	0	0	0	0	0	0	0	0	0	0	0	0	0	0	0
44	SW of Peck at I-10	GF	Day	41.9	48.6	52.9	55.5	57.3	58.9	59.7	57.7	56	54.7	56.5	58.7	58.5	60	59.8	60.3	59.3	58.6	57.6	55.9	54.1	50.6	47.3	42.7
44	SW of Peck at I-10	GF	Night	0	0	0	0	0	0	0	0	0	0	0	0	0	0	0	0	0	0	0	0	0	0	0	0
45	SW of Santa Anita at I-10	GF	Day	41.5	48.1	52.4	54.9	56.6	58.2	58.9	56.2	54.2	53	55.2	57.3	56.9	58.3	58.1	58.6	57.9	57.7	57	54.8	53	49.6	46.3	41.7
45	SW of Santa Anita at I-10	GF	Night	0	0	0	0	0	0	0	0	0	0	0	0	0	0	0	0	0	0	0	0	0	0	0	0

05360 Flair Spectrum Specific Plan
Year 2035 No Project Buildout
Receivers

No.	Receiver name	Floor	Level Day dB(A)
1	SE of Rosemead Boulevard at I-10	GF	68.9
2	NE corner of Aerojet and Telstar	GF	66.6
3	NE corner of Peck and Garvey	GF	66.9
4	NE corner of Peck and Ramona	GF	65.7
5	NE corner of Roseglen and Lower Azusa	GF	61.2
6	NE corner of Rosemead and Lower Azusa	GF	66.8
7	NE corner of Rosemead and Rush	GF	65.2
8	NE corner of Santa Anita and Valley	GF	67.5
9	NE corner of Tyler and Valley	GF	65.1
10	NE corner of Walnut Grove and Garvey	GF	64.3
11	NE corner of Walnut Grove and Valley	GF	64.7
12	NE of San Gabriel at I-10	GF	69
13	NW Corner of Aerojet and Telstar	GF	68.8
14	NW corner of Baldwin and Olive	GF	60.2
15	NW corner of Glendon and Rosemead	GF	70
16	NW corner of Merced and Garvey	GF	62.4
17	NW corner of Peck and Lower Azusa	GF	63.6
18	NW corner of Rio Hondo and Telstar	GF	65.8
19	NW corner of San Gabriel and Valley	GF	66.6
20	NW corner of Tyler and Garvey	GF	65.5
21	NW corner of Tyler and Ramona	GF	64.3
22	NW corner of Valley and Garvey	GF	65.8
23	NW of Santa Anita at I-10	GF	71.7
24	SE corner of Aerojet and Flair	GF	71
25	SE corner of Baldwin and Valley	GF	66.1
26	SE corner of Chico and Garvey	GF	64.3
27	SE corner of Rosemead and Garvey	GF	66.8
28	SE corner of Temple City at Loftus	GF	68.2
29	SE corner of Temple City at Valley	GF	65.6
30	South of Santa Anita at Tyler	GF	65.1
31	SW corner of Baldwin and Lower Azusa	GF	65.7
32	SW corner of Durfee and Ramona	GF	62.7
33	SW corner of Fletcher and Flair	GF	73.3
34	SW corner of Gilman and Ramona	GF	63.5
35	SW corner of Merced and Garvey	GF	62.3
36	SW corner of Peck and Garvey	GF	66.8

37	SW corner of Rio Hondo and Flair	GF	70.3
38	SW corner of Rosemead and Las Tunas Dr	GF	64.9
39	SW corner of Rosemead and Valley	GF	68.9
40	SW corner of Santa Anita and Garvey	GF	65.5
41	SW corner of Santa Anita and Lower Azusa	GF	64.9
42	SW corner of Telstar and Flair	GF	73.1
43	SW corner of Temple City and Lower Azusa	GF	64.2
44	SW of Peck at I-10	GF	70.8
45	SW of Santa Anita at I-10	GF	69.6

05360 Flair Spectrum Specific Plan
Year 2035 Plus Project Buildout
Contributions

Source name			Level Day dB(A)
SE of Rosemead Boulevard at I-10	GF	69.1	
Aerojet Ave NB			43.5
Aerojet Ave SB			43.6
Baldwin Ave NB			36
Baldwin Ave SB			34.9
Chico Ave SB			24.3
Durfee Ave NB			0
Durfee Ave NB (South)			0
Durfee Ave SB (South)			0
Flair Dr EB			41.3
Flair Dr WB			40.6
Fletcher Ave NB			10.4
Fletcher Ave SB			8.9
Garvey Ave EB			42.6
Garvey Ave WB			42.4
Gilman Rd NB			0
Gilman Rd SB			0
Glendon Way EB			41.7
Glendon Way WB			39.8
I-10 EB			64.8
I-10 EB Ramp			44.7
I-10 EB Ramp 2			54.2
I-10 WB			63.2
I-10 WB Ramp			19
Las Tunas Dr EB			26.7
Las Tunas Dr WB			26.5
Loftus Dr EB			27.5
Loftus Dr WB			30
Lower Azusa Rd EB			33.5
Lower Azusa Rd WB			33.6
Merced Ave NB			12.5
Merced Ave NB			24.7
Merced Ave SB			26
Olive St EB			15.9
Olive St WB			15.5
Olney St WB			13.4

Peck Rd NB			21.9
Peck Rd SB			22.6
Ramona Blvd EB			17.7
Ramona Blvd WB			17
Rio Hondo Ave NB			36.7
Rio Hondo Ave SB			31.7
Roseglen St NB			0
Roseglen St NB1			0
Roseglen St SB			0
Rosemead Blvd NB			60.7
Rosemead Blvd SB			60
Rush St EB			29
Rush St WB			24
San Gabriel Blvd NB			34.7
San Gabriel Blvd SB			35.3
Santa Anita Ave NB			31.5
Santa Anita Ave SB			31.6
Telstar Ave EB			53.2
Telstar Ave WB			46.5
Temple City Blvd NB			37.5
Temple City Blvd SB			36.6
Tyler Ave NB			25.6
Tyler Ave SB			27.6
Valley Blvd EB			41.1
Valley Blvd WB			41.5
Valley Mall NB			14.4
Valley Mall SB			12
Walnut Grove NB			40.9
Walnut Grove SB			40.4
Whitmore St			38.2
NE corner of Aerojet and Telstar	GF	67.9	
Aerojet Ave NB			55
Aerojet Ave SB			53.9
Baldwin Ave NB			35.2
Baldwin Ave SB			33.4
Chico Ave SB			26.7
Durfee Ave NB			0
Durfee Ave NB (South)			0
Durfee Ave SB (South)			0
Flair Dr EB			42.2
Flair Dr WB			41.3
Fletcher Ave NB			17.3
Fletcher Ave SB			16.1

Garvey Ave EB	44.4
Garvey Ave WB	44.3
Gilman Rd NB	0
Gilman Rd SB	0
Glendon Way EB	35.4
Glendon Way WB	33.7
I-10 EB	57.4
I-10 EB Ramp	34.4
I-10 EB Ramp 2	38.8
I-10 WB	56.1
I-10 WB Ramp	7
Las Tunas Dr EB	23.2
Las Tunas Dr WB	22.3
Loftus Dr EB	21.6
Loftus Dr WB	23.7
Lower Azusa Rd EB	33
Lower Azusa Rd WB	33.2
Merced Ave NB	15
Merced Ave NB	26.4
Merced Ave SB	27.8
Olive St EB	15.7
Olive St WB	15.3
Olney St WB	5.5
Peck Rd NB	27.5
Peck Rd SB	27.9
Ramona Blvd EB	21.8
Ramona Blvd WB	20.9
Rio Hondo Ave NB	41
Rio Hondo Ave SB	37.4
Roseglen St NB	0
Roseglen St NB1	0
Roseglen St SB	0
Rosemead Blvd NB	57.1
Rosemead Blvd SB	56.9
Rush St EB	30.3
Rush St WB	25.4
San Gabriel Blvd NB	33.2
San Gabriel Blvd SB	33.8
Santa Anita Ave NB	31
Santa Anita Ave SB	31.6
Telstar Ave EB	62.5
Telstar Ave WB	62.1
Temple City Blvd NB	37.2

Temple City Blvd SB			35.9
Tyler Ave NB			27.1
Tyler Ave SB			25.5
Valley Blvd EB			39.4
Valley Blvd WB			39.9
Valley Mall NB			-0.5
Valley Mall SB			-0.3
Walnut Grove NB			38.9
Walnut Grove SB			38.4
Whitmore St			44.7
NE corner of Peck and Garvey	GF	67.0	
Aerojet Ave NB			13.2
Aerojet Ave SB			13
Baldwin Ave NB			33
Baldwin Ave SB			32.6
Chico Ave SB			18
Durfee Ave NB			15.5
Durfee Ave NB (South)			0
Durfee Ave SB (South)			19.6
Flair Dr EB			24
Flair Dr WB			24.4
Fletcher Ave NB			9.7
Fletcher Ave SB			8.2
Garvey Ave EB			58.9
Garvey Ave WB			60.5
Gilman Rd NB			14.5
Gilman Rd SB			19.2
Glendon Way EB			1.1
Glendon Way WB			0
I-10 EB			54.9
I-10 EB Ramp			0
I-10 EB Ramp 2			10
I-10 WB			54.4
I-10 WB Ramp			9.1
Las Tunas Dr EB			0
Las Tunas Dr WB			0
Loftus Dr EB			21.3
Loftus Dr WB			24
Lower Azusa Rd EB			33.2
Lower Azusa Rd WB			33.1
Merced Ave NB			6.3
Merced Ave NB			25
Merced Ave SB			26.2

Olive St EB			0
Olive St WB			0
Olney St WB			3.4
Peck Rd NB			60.4
Peck Rd SB			60.9
Ramona Blvd EB			38.4
Ramona Blvd WB			38.8
Rio Hondo Ave NB			14.6
Rio Hondo Ave SB			10.9
Roseglen St NB			14.2
Roseglen St NB1			10.9
Roseglen St SB			9.7
Rosemead Blvd NB			33.7
Rosemead Blvd SB			33.3
Rush St EB			25.2
Rush St WB			20.2
San Gabriel Blvd NB			0
San Gabriel Blvd SB			0
Santa Anita Ave NB			40.1
Santa Anita Ave SB			40
Telstar Ave EB			27.4
Telstar Ave WB			23.9
Temple City Blvd NB			30.4
Temple City Blvd SB			28.9
Tyler Ave NB			43.1
Tyler Ave SB			42
Valley Blvd EB			45.5
Valley Blvd WB			44.6
Valley Mall NB			24.7
Valley Mall SB			22.5
Walnut Grove NB			0
Walnut Grove SB			0
Whitmore St			21
NE corner of Peck and Ramona	GF	65.7	
Aerojet Ave NB			0
Aerojet Ave SB			0
Baldwin Ave NB			33
Baldwin Ave SB			32
Chico Ave SB			14.5
Durfee Ave NB			20.7
Durfee Ave NB (South)			0
Durfee Ave SB (South)			25.1
Flair Dr EB			22

Flair Dr WB	22.3
Fletcher Ave NB	7.4
Fletcher Ave SB	5.9
Garvey Ave EB	37.9
Garvey Ave WB	38.3
Gilman Rd NB	18.9
Gilman Rd SB	23.7
Glendon Way EB	0
Glendon Way WB	0
I-10 EB	50.4
I-10 EB Ramp	0
I-10 EB Ramp 2	0
I-10 WB	50.6
I-10 WB Ramp	7.2
Las Tunas Dr EB	0
Las Tunas Dr WB	0
Loftus Dr EB	20.3
Loftus Dr WB	22.6
Lower Azusa Rd EB	37.6
Lower Azusa Rd WB	37.3
Merced Ave NB	2.8
Merced Ave NB	20.6
Merced Ave SB	21.8
Olive St EB	15.5
Olive St WB	15.1
Olney St WB	1.5
Peck Rd NB	61
Peck Rd SB	59.4
Ramona Blvd EB	57.7
Ramona Blvd WB	58.4
Rio Hondo Ave NB	11.8
Rio Hondo Ave SB	8.1
Roseglen St NB	19.3
Roseglen St NB1	16.1
Roseglen St SB	14.7
Rosemead Blvd NB	0
Rosemead Blvd SB	0
Rush St EB	0
Rush St WB	0
San Gabriel Blvd NB	0
San Gabriel Blvd SB	0
Santa Anita Ave NB	38.4
Santa Anita Ave SB	38.4

Telstar Ave EB			19.2
Telstar Ave WB			18.4
Temple City Blvd NB			30.5
Temple City Blvd SB			28.9
Tyler Ave NB			38
Tyler Ave SB			40
Valley Blvd EB			43
Valley Blvd WB			42.2
Valley Mall NB			24.5
Valley Mall SB			22.2
Walnut Grove NB			0
Walnut Grove SB			0
Whitmore St			0
NE corner of Roseglen and Lower Azusa	GF	61.1	
Aerojet Ave NB			0
Aerojet Ave SB			0
Baldwin Ave NB			0
Baldwin Ave SB			0
Chico Ave SB			0
Durfee Ave NB			40.8
Durfee Ave NB (South)			0
Durfee Ave SB (South)			23
Flair Dr EB			0
Flair Dr WB			0
Fletcher Ave NB			0
Fletcher Ave SB			0
Garvey Ave EB			26.1
Garvey Ave WB			26.6
Gilman Rd NB			19.9
Gilman Rd SB			24.6
Glendon Way EB			0
Glendon Way WB			0
I-10 EB			37.7
I-10 EB Ramp			0
I-10 EB Ramp 2			0
I-10 WB			38.3
I-10 WB Ramp			0
Las Tunas Dr EB			0
Las Tunas Dr WB			0
Loftus Dr EB			0
Loftus Dr WB			0
Lower Azusa Rd EB			57.2
Lower Azusa Rd WB			57.9

Merced Ave NB			0
Merced Ave NB			0
Merced Ave SB			0
Olive St EB			0
Olive St WB			0
Olney St WB			0
Peck Rd NB			38.8
Peck Rd SB			38.2
Ramona Blvd EB			36.5
Ramona Blvd WB			36.5
Rio Hondo Ave NB			0
Rio Hondo Ave SB			0
Roseglen St NB			49.1
Roseglen St NB1			36.1
Roseglen St SB			43.4
Rosemead Blvd NB			0
Rosemead Blvd SB			0
Rush St EB			0
Rush St WB			0
San Gabriel Blvd NB			0
San Gabriel Blvd SB			0
Santa Anita Ave NB			28.7
Santa Anita Ave SB			28.8
Telstar Ave EB			0
Telstar Ave WB			0
Temple City Blvd NB			0
Temple City Blvd SB			0
Tyler Ave NB			30.5
Tyler Ave SB			32.7
Valley Blvd EB			31.2
Valley Blvd WB			30.2
Valley Mall NB			14.6
Valley Mall SB			12.2
Walnut Grove NB			0
Walnut Grove SB			0
Whitmore St			0
NE corner of Rosemead and Lower Azusa	GF	66.9	
Aerojet Ave NB			21.7
Aerojet Ave SB			21.6
Baldwin Ave NB			36.5
Baldwin Ave SB			35.8
Chico Ave SB			15.5
Durfee Ave NB			0

Durfee Ave NB (South)	0
Durfee Ave SB (South)	0
Flair Dr EB	28.6
Flair Dr WB	28.3
Fletcher Ave NB	12.4
Fletcher Ave SB	10.9
Garvey Ave EB	33.2
Garvey Ave WB	33.1
Gilman Rd NB	0
Gilman Rd SB	0
Glendon Way EB	28.3
Glendon Way WB	26.7
I-10 EB	45.6
I-10 EB Ramp	22.5
I-10 EB Ramp 2	24.1
I-10 WB	45
I-10 WB Ramp	12.5
Las Tunas Dr EB	33.5
Las Tunas Dr WB	33.3
Loftus Dr EB	23.6
Loftus Dr WB	26.1
Lower Azusa Rd EB	55.8
Lower Azusa Rd WB	56.3
Merced Ave NB	3.3
Merced Ave NB	19.6
Merced Ave SB	20.9
Olive St EB	20.5
Olive St WB	20.1
Olney St WB	7
Peck Rd NB	0
Peck Rd SB	0
Ramona Blvd EB	20.2
Ramona Blvd WB	20.8
Rio Hondo Ave NB	23.4
Rio Hondo Ave SB	19.6
Roseglen St NB	0
Roseglen St NB1	0
Roseglen St SB	0
Rosemead Blvd NB	63.6
Rosemead Blvd SB	62.1
Rush St EB	20
Rush St WB	15
San Gabriel Blvd NB	33.7

San Gabriel Blvd SB			34.3
Santa Anita Ave NB			31.5
Santa Anita Ave SB			31.4
Telstar Ave EB			32.2
Telstar Ave WB			27.7
Temple City Blvd NB			39.1
Temple City Blvd SB			37.3
Tyler Ave NB			24.7
Tyler Ave SB			27.3
Valley Blvd EB			43
Valley Blvd WB			43.7
Valley Mall NB			14.8
Valley Mall SB			12.5
Walnut Grove NB			38
Walnut Grove SB			38
Whitmore St			24.2
NE corner of Rosemead and Rush	GF	65.4	
Aerojet Ave NB			21.9
Aerojet Ave SB			21.7
Baldwin Ave NB			31.1
Baldwin Ave SB			29.8
Chico Ave SB			30.3
Durfee Ave NB			0
Durfee Ave NB (South)			0
Durfee Ave SB (South)			0
Flair Dr EB			27.7
Flair Dr WB			27.5
Fletcher Ave NB			13.7
Fletcher Ave SB			12.3
Garvey Ave EB			41.8
Garvey Ave WB			41.5
Gilman Rd NB			0
Gilman Rd SB			0
Glendon Way EB			23.3
Glendon Way WB			21.6
I-10 EB			44.7
I-10 EB Ramp			19.9
I-10 EB Ramp 2			22.3
I-10 WB			44
I-10 WB Ramp			11.9
Las Tunas Dr EB			0
Las Tunas Dr WB			0
Loftus Dr EB			22

Loftus Dr WB			24.6
Lower Azusa Rd EB			23.8
Lower Azusa Rd WB			23.6
Merced Ave NB			18.6
Merced Ave NB			27.3
Merced Ave SB			28.7
Olive St EB			0
Olive St WB			0
Olney St WB			6.1
Peck Rd NB			28
Peck Rd SB			28.4
Ramona Blvd EB			23.7
Ramona Blvd WB			24.2
Rio Hondo Ave NB			24.4
Rio Hondo Ave SB			20.5
Roseglen St NB			0
Roseglen St NB1			0
Roseglen St SB			0
Rosemead Blvd NB			62.5
Rosemead Blvd SB			60.4
Rush St EB			54.6
Rush St WB			50.8
San Gabriel Blvd NB			28.2
San Gabriel Blvd SB			28.8
Santa Anita Ave NB			33
Santa Anita Ave SB			33
Telstar Ave EB			34.4
Telstar Ave WB			30.3
Temple City Blvd NB			30.9
Temple City Blvd SB			29.7
Tyler Ave NB			28.1
Tyler Ave SB			28
Valley Blvd EB			34.7
Valley Blvd WB			34.6
Valley Mall NB			15.3
Valley Mall SB			13.1
Walnut Grove NB			33.9
Walnut Grove SB			33.4
Whitmore St			30.5
NE corner of Santa Anita and Valley	GF	67.7	
Aerojet Ave NB			15.3
Aerojet Ave SB			15.2
Baldwin Ave NB			40.6

Baldwin Ave SB	39.1
Chico Ave SB	18.8
Durfee Ave NB	15.2
Durfee Ave NB (South)	0
Durfee Ave SB (South)	17.1
Flair Dr EB	29.4
Flair Dr WB	29.5
Fletcher Ave NB	13.4
Fletcher Ave SB	11.9
Garvey Ave EB	38.5
Garvey Ave WB	38.8
Gilman Rd NB	12.1
Gilman Rd SB	16.8
Glendon Way EB	20.8
Glendon Way WB	19.2
I-10 EB	51.2
I-10 EB Ramp	16.3
I-10 EB Ramp 2	18.9
I-10 WB	50.7
I-10 WB Ramp	13.7
Las Tunas Dr EB	10.7
Las Tunas Dr WB	0
Loftus Dr EB	27.6
Loftus Dr WB	30.5
Lower Azusa Rd EB	38.5
Lower Azusa Rd WB	38.3
Merced Ave NB	7.1
Merced Ave NB	25.8
Merced Ave SB	27
Olive St EB	19.2
Olive St WB	18.8
Olney St WB	8.1
Peck Rd NB	39.4
Peck Rd SB	39.2
Ramona Blvd EB	40.4
Ramona Blvd WB	41.1
Rio Hondo Ave NB	14.7
Rio Hondo Ave SB	11.1
Roseglen St NB	14.7
Roseglen St NB1	10.6
Roseglen St SB	10.1
Rosemead Blvd NB	37
Rosemead Blvd SB	36.7

Rush St EB			24.4
Rush St WB			19.5
San Gabriel Blvd NB			0
San Gabriel Blvd SB			0
Santa Anita Ave NB			61
Santa Anita Ave SB			60.7
Telstar Ave EB			24.8
Telstar Ave WB			24.2
Temple City Blvd NB			37
Temple City Blvd SB			35.3
Tyler Ave NB			42.7
Tyler Ave SB			45
Valley Blvd EB			62.4
Valley Blvd WB			61
Valley Mall NB			42
Valley Mall SB			39.5
Walnut Grove NB			26.9
Walnut Grove SB			26.6
Whitmore St			23.1
NE corner of Tyler and Valley	GF	65.2	
Aerojet Ave NB			11.7
Aerojet Ave SB			11.7
Baldwin Ave NB			37.3
Baldwin Ave SB			36.1
Chico Ave SB			17.6
Durfee Ave NB			16.6
Durfee Ave NB (South)			0
Durfee Ave SB (South)			19.1
Flair Dr EB			27.1
Flair Dr WB			27.1
Fletcher Ave NB			11.3
Fletcher Ave SB			9.8
Garvey Ave EB			39.1
Garvey Ave WB			39.4
Gilman Rd NB			14
Gilman Rd SB			18.7
Glendon Way EB			19.1
Glendon Way WB			17.5
I-10 EB			52
I-10 EB Ramp			14.9
I-10 EB Ramp 2			17.4
I-10 WB			51.6
I-10 WB Ramp			11.3

Las Tunas Dr EB			0
Las Tunas Dr WB			0
Loftus Dr EB			24.7
Loftus Dr WB			27.7
Lower Azusa Rd EB			37.6
Lower Azusa Rd WB			37.4
Merced Ave NB			6
Merced Ave NB			24.6
Merced Ave SB			25.8
Olive St EB			17.7
Olive St WB			17.3
Olney St WB			5.6
Peck Rd NB			43.1
Peck Rd SB			43
Ramona Blvd EB			46.3
Ramona Blvd WB			47
Rio Hondo Ave NB			14.6
Rio Hondo Ave SB			11
Roseglen St NB			16
Roseglen St NB1			12.1
Roseglen St SB			11.4
Rosemead Blvd NB			35.3
Rosemead Blvd SB			35
Rush St EB			23.8
Rush St WB			18.8
San Gabriel Blvd NB			0
San Gabriel Blvd SB			0
Santa Anita Ave NB			46.4
Santa Anita Ave SB			45.9
Telstar Ave EB			24
Telstar Ave WB			23.3
Temple City Blvd NB			34.3
Temple City Blvd SB			32.8
Tyler Ave NB			54.5
Tyler Ave SB			57
Valley Blvd EB			60.7
Valley Blvd WB			58.6
Valley Mall NB			42
Valley Mall SB			39.4
Walnut Grove NB			0
Walnut Grove SB			0
Whitmore St			21.6
NE corner of Walnut Grove and Garvey	GF	64.4	

Aerojet Ave NB	25.4
Aerojet Ave SB	25.3
Baldwin Ave NB	29.4
Baldwin Ave SB	27.7
Chico Ave SB	21.7
Durfee Ave NB	0
Durfee Ave NB (South)	0
Durfee Ave SB (South)	0
Flair Dr EB	26.1
Flair Dr WB	26
Fletcher Ave NB	9.1
Fletcher Ave SB	7.7
Garvey Ave EB	58.1
Garvey Ave WB	59.1
Gilman Rd NB	0
Gilman Rd SB	0
Glendon Way EB	29.7
Glendon Way WB	28
I-10 EB	49
I-10 EB Ramp	26.9
I-10 EB Ramp 2	28.5
I-10 WB	48.5
I-10 WB Ramp	-0.8
Las Tunas Dr EB	0
Las Tunas Dr WB	0
Loftus Dr EB	17.5
Loftus Dr WB	20
Lower Azusa Rd EB	28.3
Lower Azusa Rd WB	28.2
Merced Ave NB	9.9
Merced Ave NB	21.6
Merced Ave SB	22.9
Olive St EB	0
Olive St WB	0
Olney St WB	-1.7
Peck Rd NB	0
Peck Rd SB	0
Ramona Blvd EB	14.6
Ramona Blvd WB	15.2
Rio Hondo Ave NB	25.3
Rio Hondo Ave SB	21.5
Roseglen St NB	0
Roseglen St NB1	0

Roseglen St SB			0
Rosemead Blvd NB			45
Rosemead Blvd SB			45
Rush St EB			29.6
Rush St WB			24.7
San Gabriel Blvd NB			38
San Gabriel Blvd SB			38.5
Santa Anita Ave NB			28.7
Santa Anita Ave SB			28.5
Telstar Ave EB			38.1
Telstar Ave WB			32.5
Temple City Blvd NB			31.7
Temple City Blvd SB			30.3
Tyler Ave NB			0
Tyler Ave SB			0
Valley Blvd EB			36.5
Valley Blvd WB			36.8
Valley Mall NB			8
Valley Mall SB			0
Walnut Grove NB			58
Walnut Grove SB			55.8
Whitmore St			31.2
NE corner of Walnut Grove and Valley	GF	64.7	
Aerojet Ave NB			23.4
Aerojet Ave SB			23.3
Baldwin Ave NB			33.6
Baldwin Ave SB			32.7
Chico Ave SB			17.4
Durfee Ave NB			0
Durfee Ave NB (South)			0
Durfee Ave SB (South)			0
Flair Dr EB			28.6
Flair Dr WB			28.3
Fletcher Ave NB			10.1
Fletcher Ave SB			8.6
Garvey Ave EB			35.2
Garvey Ave WB			35
Gilman Rd NB			0
Gilman Rd SB			0
Glendon Way EB			32.4
Glendon Way WB			30.8
I-10 EB			48.9
I-10 EB Ramp			25.2

I-10 EB Ramp 2	27
I-10 WB	48.7
I-10 WB Ramp	11.8
Las Tunas Dr EB	30.1
Las Tunas Dr WB	29.9
Loftus Dr EB	22.1
Loftus Dr WB	24.7
Lower Azusa Rd EB	35.8
Lower Azusa Rd WB	35.4
Merced Ave NB	5.7
Merced Ave NB	16.1
Merced Ave SB	17.4
Olive St EB	16.6
Olive St WB	16.2
Olney St WB	6.2
Peck Rd NB	0
Peck Rd SB	0
Ramona Blvd EB	14.4
Ramona Blvd WB	15.1
Rio Hondo Ave NB	23.9
Rio Hondo Ave SB	20.1
Roseglen St NB	0
Roseglen St NB1	0
Roseglen St SB	0
Rosemead Blvd NB	46.6
Rosemead Blvd SB	46.5
Rush St EB	23.9
Rush St WB	18.9
San Gabriel Blvd NB	40.5
San Gabriel Blvd SB	40.9
Santa Anita Ave NB	28.8
Santa Anita Ave SB	28.6
Telstar Ave EB	34
Telstar Ave WB	29
Temple City Blvd NB	35.1
Temple City Blvd SB	33.6
Tyler Ave NB	0
Tyler Ave SB	0
Valley Blvd EB	58.4
Valley Blvd WB	59.1
Valley Mall NB	8.5
Valley Mall SB	8.7
Walnut Grove NB	58.4

Walnut Grove SB			56.8
Whitmore St			25.7
NE of San Gabriel at I-10	GF	69.1	
Aerojet Ave NB			21.7
Aerojet Ave SB			21.6
Baldwin Ave NB			29.1
Baldwin Ave SB			27.7
Chico Ave SB			17
Durfee Ave NB			0
Durfee Ave NB (South)			0
Durfee Ave SB (South)			0
Flair Dr EB			26.7
Flair Dr WB			26.3
Fletcher Ave NB			4.7
Fletcher Ave SB			3.1
Garvey Ave EB			37.3
Garvey Ave WB			37
Gilman Rd NB			0
Gilman Rd SB			0
Glendon Way EB			28.9
Glendon Way WB			27.3
I-10 EB			63.8
I-10 EB Ramp			24.2
I-10 EB Ramp 2			25.9
I-10 WB			65.8
I-10 WB Ramp			9.4
Las Tunas Dr EB			25.8
Las Tunas Dr WB			25.6
Loftus Dr EB			19.6
Loftus Dr WB			22.1
Lower Azusa Rd EB			29.4
Lower Azusa Rd WB			29.5
Merced Ave NB			5.3
Merced Ave NB			18.3
Merced Ave SB			19.6
Olive St EB			0
Olive St WB			0
Olney St WB			3.7
Peck Rd NB			0
Peck Rd SB			0
Ramona Blvd EB			0
Ramona Blvd WB			0
Rio Hondo Ave NB			22.1

Rio Hondo Ave SB			18.3
Roseglen St NB			0
Roseglen St NB1			0
Roseglen St SB			0
Rosemead Blvd NB			42.1
Rosemead Blvd SB			41.8
Rush St EB			24.5
Rush St WB			19.5
San Gabriel Blvd NB			59.9
San Gabriel Blvd SB			58.6
Santa Anita Ave NB			0
Santa Anita Ave SB			0
Telstar Ave EB			33.1
Telstar Ave WB			27.9
Temple City Blvd NB			31.5
Temple City Blvd SB			30
Tyler Ave NB			0
Tyler Ave SB			0
Valley Blvd EB			42.6
Valley Blvd WB			42.7
Valley Mall NB			0
Valley Mall SB			0
Walnut Grove NB			43.2
Walnut Grove SB			43.1
Whitmore St			25.1
NW Corner of Aerojet and Telstar	GF	70.0	
Aerojet Ave NB			55.2
Aerojet Ave SB			56.1
Baldwin Ave NB			35
Baldwin Ave SB			33.5
Chico Ave SB			26.3
Durfee Ave NB			0
Durfee Ave NB (South)			0
Durfee Ave SB (South)			0
Flair Dr EB			41.1
Flair Dr WB			40.2
Fletcher Ave NB			16.2
Fletcher Ave SB			15
Garvey Ave EB			44.5
Garvey Ave WB			44.3
Gilman Rd NB			0
Gilman Rd SB			0
Glendon Way EB			36.1

Glendon Way WB	34.4
I-10 EB	57.3
I-10 EB Ramp	36
I-10 EB Ramp 2	40.6
I-10 WB	56.1
I-10 WB Ramp	6.7
Las Tunas Dr EB	23.2
Las Tunas Dr WB	22.3
Loftus Dr EB	23.9
Loftus Dr WB	26.3
Lower Azusa Rd EB	32.9
Lower Azusa Rd WB	33.1
Merced Ave NB	14.5
Merced Ave NB	26
Merced Ave SB	27.3
Olive St EB	15.6
Olive St WB	15.2
Olney St WB	6.9
Peck Rd NB	27.2
Peck Rd SB	27
Ramona Blvd EB	19.5
Ramona Blvd WB	18.5
Rio Hondo Ave NB	38.7
Rio Hondo Ave SB	35.1
Roseglen St NB	0
Roseglen St NB1	0
Roseglen St SB	0
Rosemead Blvd NB	59.6
Rosemead Blvd SB	59.3
Rush St EB	30.2
Rush St WB	25.3
San Gabriel Blvd NB	33.6
San Gabriel Blvd SB	34.1
Santa Anita Ave NB	30.8
Santa Anita Ave SB	31.4
Telstar Ave EB	65.2
Telstar Ave WB	64.8
Temple City Blvd NB	37
Temple City Blvd SB	35.9
Tyler Ave NB	26.8
Tyler Ave SB	25.3
Valley Blvd EB	39.5
Valley Blvd WB	40

Valley Mall NB			1.7
Valley Mall SB			-0.7
Walnut Grove NB			39.5
Walnut Grove SB			38.9
Whitmore St			44.1
NW corner of Baldwin and Olive	GF	61.0	
Aerojet Ave NB			15.2
Aerojet Ave SB			15
Baldwin Ave NB			56.1
Baldwin Ave SB			57.9
Chico Ave SB			0
Durfee Ave NB			0
Durfee Ave NB (South)			0
Durfee Ave SB (South)			0
Flair Dr EB			23.8
Flair Dr WB			23.7
Fletcher Ave NB			8
Fletcher Ave SB			6.5
Garvey Ave EB			0
Garvey Ave WB			0
Gilman Rd NB			0
Gilman Rd SB			0
Glendon Way EB			19.5
Glendon Way WB			17.9
I-10 EB			40.1
I-10 EB Ramp			14.1
I-10 EB Ramp 2			16.5
I-10 WB			39.4
I-10 WB Ramp			8.3
Las Tunas Dr EB			33.5
Las Tunas Dr WB			33.4
Loftus Dr EB			20.6
Loftus Dr WB			23.3
Lower Azusa Rd EB			40.1
Lower Azusa Rd WB			40.2
Merced Ave NB			0
Merced Ave NB			15.2
Merced Ave SB			16.7
Olive St EB			48.6
Olive St WB			49
Olney St WB			2.8
Peck Rd NB			30.5
Peck Rd SB			29.9

Ramona Blvd EB			25.7
Ramona Blvd WB			26.3
Rio Hondo Ave NB			14.9
Rio Hondo Ave SB			11.6
Roseglen St NB			0
Roseglen St NB1			0
Roseglen St SB			0
Rosemead Blvd NB			37.7
Rosemead Blvd SB			37.6
Rush St EB			0
Rush St WB			0
San Gabriel Blvd NB			0
San Gabriel Blvd SB			0
Santa Anita Ave NB			32.7
Santa Anita Ave SB			32.9
Telstar Ave EB			26.2
Telstar Ave WB			22.1
Temple City Blvd NB			38.6
Temple City Blvd SB			36.6
Tyler Ave NB			30.7
Tyler Ave SB			33
Valley Blvd EB			35.7
Valley Blvd WB			35.9
Valley Mall NB			16.2
Valley Mall SB			13.9
Walnut Grove NB			25.4
Walnut Grove SB			25.5
Whitmore St			0
NW corner of Glendon and Rosemead	GF	70.2	
Aerojet Ave NB			33.1
Aerojet Ave SB			33
Baldwin Ave NB			35.8
Baldwin Ave SB			34.7
Chico Ave SB			21.6
Durfee Ave NB			0
Durfee Ave NB (South)			0
Durfee Ave SB (South)			0
Flair Dr EB			36.2
Flair Dr WB			35.7
Fletcher Ave NB			14.1
Fletcher Ave SB			12.5
Garvey Ave EB			39.6
Garvey Ave WB			39.3

Gilman Rd NB	0
Gilman Rd SB	0
Glendon Way EB	57.3
Glendon Way WB	57
I-10 EB	60.2
I-10 EB Ramp	40.2
I-10 EB Ramp 2	42.3
I-10 WB	59.8
I-10 WB Ramp	16.7
Las Tunas Dr EB	28
Las Tunas Dr WB	27.8
Loftus Dr EB	26.4
Loftus Dr WB	28.8
Lower Azusa Rd EB	34.9
Lower Azusa Rd WB	34.9
Merced Ave NB	9.9
Merced Ave NB	20
Merced Ave SB	21.3
Olive St EB	16.5
Olive St WB	16.1
Olney St WB	11.2
Peck Rd NB	0
Peck Rd SB	0
Ramona Blvd EB	23.1
Ramona Blvd WB	23.7
Rio Hondo Ave NB	31
Rio Hondo Ave SB	27.3
Roseglen St NB	0
Roseglen St NB1	0
Roseglen St SB	0
Rosemead Blvd NB	65.5
Rosemead Blvd SB	65.8
Rush St EB	27.1
Rush St WB	22.1
San Gabriel Blvd NB	36.2
San Gabriel Blvd SB	36.7
Santa Anita Ave NB	31.4
Santa Anita Ave SB	31.2
Telstar Ave EB	42.9
Telstar Ave WB	37
Temple City Blvd NB	37.4
Temple City Blvd SB	36.2
Tyler Ave NB	26

Tyler Ave SB			27
Valley Blvd EB			44.1
Valley Blvd WB			44.4
Valley Mall NB			15.5
Valley Mall SB			13.3
Walnut Grove NB			42.7
Walnut Grove SB			42.2
Whitmore St			32.5
NW corner of Merced and Garvey	GF	62.5	
Aerojet Ave NB			23.2
Aerojet Ave SB			23
Baldwin Ave NB			38
Baldwin Ave SB			37
Chico Ave SB			30.4
Durfee Ave NB			0
Durfee Ave NB (South)			0
Durfee Ave SB (South)			0
Flair Dr EB			33.6
Flair Dr WB			33.7
Fletcher Ave NB			19.9
Fletcher Ave SB			18.4
Garvey Ave EB			56.4
Garvey Ave WB			57
Gilman Rd NB			0
Gilman Rd SB			0
Glendon Way EB			23
Glendon Way WB			21.1
I-10 EB			51.4
I-10 EB Ramp			20.2
I-10 EB Ramp 2			22.9
I-10 WB			50.6
I-10 WB Ramp			18.1
Las Tunas Dr EB			0
Las Tunas Dr WB			0
Loftus Dr EB			28.9
Loftus Dr WB			31.5
Lower Azusa Rd EB			32.3
Lower Azusa Rd WB			32.2
Merced Ave NB			19
Merced Ave NB			52.2
Merced Ave SB			54.2
Olive St EB			15.1
Olive St WB			14.7

Olney St WB			12.2
Peck Rd NB			34.4
Peck Rd SB			34.5
Ramona Blvd EB			32
Ramona Blvd WB			32.4
Rio Hondo Ave NB			23.8
Rio Hondo Ave SB			20.1
Roseglen St NB			0
Roseglen St NB1			0
Roseglen St SB			0
Rosemead Blvd NB			42.9
Rosemead Blvd SB			42.7
Rush St EB			32.4
Rush St WB			27.5
San Gabriel Blvd NB			26.8
San Gabriel Blvd SB			27.4
Santa Anita Ave NB			41.5
Santa Anita Ave SB			41.6
Telstar Ave EB			36.3
Telstar Ave WB			33.5
Temple City Blvd NB			36
Temple City Blvd SB			35.1
Tyler Ave NB			34.9
Tyler Ave SB			35.1
Valley Blvd EB			39.5
Valley Blvd WB			39.3
Valley Mall NB			21.7
Valley Mall SB			19.4
Walnut Grove NB			31.2
Walnut Grove SB			30.7
Whitmore St			30.7
NW corner of Peck and Lower Azusa	GF	63.6	
Aerojet Ave NB			0
Aerojet Ave SB			0
Baldwin Ave NB			31.6
Baldwin Ave SB			30.8
Chico Ave SB			0
Durfee Ave NB			24.4
Durfee Ave NB (South)			0
Durfee Ave SB (South)			20.9
Flair Dr EB			0
Flair Dr WB			0
Fletcher Ave NB			0

Fletcher Ave SB	0
Garvey Ave EB	28.9
Garvey Ave WB	29.3
Gilman Rd NB	16.5
Gilman Rd SB	21.2
Glendon Way EB	0
Glendon Way WB	0
I-10 EB	40.4
I-10 EB Ramp	0
I-10 EB Ramp 2	0
I-10 WB	40.3
I-10 WB Ramp	0
Las Tunas Dr EB	0
Las Tunas Dr WB	0
Loftus Dr EB	12.7
Loftus Dr WB	16
Lower Azusa Rd EB	57
Lower Azusa Rd WB	57.6
Merced Ave NB	0
Merced Ave NB	0
Merced Ave SB	0
Olive St EB	16.9
Olive St WB	16.5
Olney St WB	0
Peck Rd NB	57.4
Peck Rd SB	58
Ramona Blvd EB	35.5
Ramona Blvd WB	35.6
Rio Hondo Ave NB	0
Rio Hondo Ave SB	0
Roseglen St NB	27.4
Roseglen St NB1	19.9
Roseglen St SB	22.9
Rosemead Blvd NB	0
Rosemead Blvd SB	0
Rush St EB	0
Rush St WB	0
San Gabriel Blvd NB	0
San Gabriel Blvd SB	0
Santa Anita Ave NB	34.3
Santa Anita Ave SB	34.4
Telstar Ave EB	0
Telstar Ave WB	0

Temple City Blvd NB			26.6
Temple City Blvd SB			24.6
Tyler Ave NB			37.1
Tyler Ave SB			39.1
Valley Blvd EB			34.4
Valley Blvd WB			33.5
Valley Mall NB			17.5
Valley Mall SB			15.2
Walnut Grove NB			0
Walnut Grove SB			0
Whitmore St			0
NW corner of Rio Hondo and Telstar	GF	68.2	
Aerojet Ave NB			38.5
Aerojet Ave SB			38.2
Baldwin Ave NB			19.7
Baldwin Ave SB			20.1
Chico Ave SB			28.5
Durfee Ave NB			0
Durfee Ave NB (South)			0
Durfee Ave SB (South)			0
Flair Dr EB			42.7
Flair Dr WB			41.7
Fletcher Ave NB			24.6
Fletcher Ave SB			23.4
Garvey Ave EB			44.9
Garvey Ave WB			44.8
Gilman Rd NB			0
Gilman Rd SB			0
Glendon Way EB			32.4
Glendon Way WB			30.7
I-10 EB			56.4
I-10 EB Ramp			29.4
I-10 EB Ramp 2			33
I-10 WB			55.1
I-10 WB Ramp			-1.8
Las Tunas Dr EB			20.1
Las Tunas Dr WB			0
Loftus Dr EB			7.2
Loftus Dr WB			9.7
Lower Azusa Rd EB			31
Lower Azusa Rd WB			30.8
Merced Ave NB			16.8
Merced Ave NB			29.8

Merced Ave SB			31.1
Olive St EB			10.1
Olive St WB			9.8
Olney St WB			-7.9
Peck Rd NB			29.2
Peck Rd SB			29.4
Ramona Blvd EB			26.6
Ramona Blvd WB			27.3
Rio Hondo Ave NB			58.6
Rio Hondo Ave SB			56.3
Roseglen St NB			0
Roseglen St NB1			0
Roseglen St SB			0
Rosemead Blvd NB			51.8
Rosemead Blvd SB			51.6
Rush St EB			30.7
Rush St WB			25.7
San Gabriel Blvd NB			31.9
San Gabriel Blvd SB			32.4
Santa Anita Ave NB			34
Santa Anita Ave SB			33.8
Telstar Ave EB			62.7
Telstar Ave WB			63.7
Temple City Blvd NB			29.6
Temple City Blvd SB			28
Tyler Ave NB			28.9
Tyler Ave SB			28.1
Valley Blvd EB			38.8
Valley Blvd WB			39.3
Valley Mall NB			16.8
Valley Mall SB			14.6
Walnut Grove NB			37.1
Walnut Grove SB			36.6
Whitmore St			43.9
NW corner of San Gabriel and Valley	GF	66.7	
Aerojet Ave NB			19.7
Aerojet Ave SB			19.6
Baldwin Ave NB			29.5
Baldwin Ave SB			27.8
Chico Ave SB			15.3
Durfee Ave NB			0
Durfee Ave NB (South)			0
Durfee Ave SB (South)			0

Flair Dr EB	25
Flair Dr WB	24.7
Fletcher Ave NB	5.6
Fletcher Ave SB	4
Garvey Ave EB	33.7
Garvey Ave WB	33.3
Gilman Rd NB	0
Gilman Rd SB	0
Glendon Way EB	26.9
Glendon Way WB	25.3
I-10 EB	47.7
I-10 EB Ramp	21.1
I-10 EB Ramp 2	22.9
I-10 WB	47.6
I-10 WB Ramp	8.3
Las Tunas Dr EB	28.7
Las Tunas Dr WB	28.5
Loftus Dr EB	18.8
Loftus Dr WB	21.4
Lower Azusa Rd EB	30.4
Lower Azusa Rd WB	30.4
Merced Ave NB	3.5
Merced Ave NB	1.7
Merced Ave SB	3.2
Olive St EB	9.5
Olive St WB	9.2
Olney St WB	2.7
Peck Rd NB	0
Peck Rd SB	0
Ramona Blvd EB	0
Ramona Blvd WB	0
Rio Hondo Ave NB	20.4
Rio Hondo Ave SB	16.6
Roseglen St NB	0
Roseglen St NB1	0
Roseglen St SB	0
Rosemead Blvd NB	41.1
Rosemead Blvd SB	40.9
Rush St EB	19.9
Rush St WB	15
San Gabriel Blvd NB	56.7
San Gabriel Blvd SB	59
Santa Anita Ave NB	0

Santa Anita Ave SB			0
Telstar Ave EB			30.7
Telstar Ave WB			25.8
Temple City Blvd NB			31.5
Temple City Blvd SB			30
Tyler Ave NB			0
Tyler Ave SB			0
Valley Blvd EB			60.6
Valley Blvd WB			63.1
Valley Mall NB			0
Valley Mall SB			0
Walnut Grove NB			40.7
Walnut Grove SB			40.8
Whitmore St			22.9
NW corner of Tyler and Garvey	GF	65.6	
Aerojet Ave NB			15.4
Aerojet Ave SB			15.3
Baldwin Ave NB			34.5
Baldwin Ave SB			33.3
Chico Ave SB			20.3
Durfee Ave NB			11.4
Durfee Ave NB (South)			0
Durfee Ave SB (South)			17.5
Flair Dr EB			26.3
Flair Dr WB			26.6
Fletcher Ave NB			11.9
Fletcher Ave SB			10.4
Garvey Ave EB			58
Garvey Ave WB			59.4
Gilman Rd NB			12.6
Gilman Rd SB			17.4
Glendon Way EB			13.1
Glendon Way WB			11.6
I-10 EB			54.9
I-10 EB Ramp			14.2
I-10 EB Ramp 2			15.9
I-10 WB			54.1
I-10 WB Ramp			11.3
Las Tunas Dr EB			0
Las Tunas Dr WB			0
Loftus Dr EB			23.6
Loftus Dr WB			26.3
Lower Azusa Rd EB			33.2

Lower Azusa Rd WB			33.1
Merced Ave NB			8.7
Merced Ave NB			28.4
Merced Ave SB			29.6
Olive St EB			0
Olive St WB			0
Olney St WB			5.5
Peck Rd NB			44.6
Peck Rd SB			45.1
Ramona Blvd EB			37.8
Ramona Blvd WB			38.1
Rio Hondo Ave NB			16.7
Rio Hondo Ave SB			13
Roseglen St NB			0
Roseglen St NB1			6.9
Roseglen St SB			0
Rosemead Blvd NB			36.1
Rosemead Blvd SB			35.9
Rush St EB			27
Rush St WB			22.1
San Gabriel Blvd NB			0
San Gabriel Blvd SB			0
Santa Anita Ave NB			45
Santa Anita Ave SB			45.1
Telstar Ave EB			29.4
Telstar Ave WB			26
Temple City Blvd NB			32.3
Temple City Blvd SB			30.9
Tyler Ave NB			58.9
Tyler Ave SB			57.6
Valley Blvd EB			42.7
Valley Blvd WB			41.8
Valley Mall NB			25.8
Valley Mall SB			23.5
Walnut Grove NB			0
Walnut Grove SB			0
Whitmore St			23
NW corner of Tyler and Ramona	GF	64.4	
Aerojet Ave NB			11.4
Aerojet Ave SB			11.2
Baldwin Ave NB			37.7
Baldwin Ave SB			36.4
Chico Ave SB			19

Durfee Ave NB	15.6
Durfee Ave NB (South)	0
Durfee Ave SB (South)	18.2
Flair Dr EB	28.5
Flair Dr WB	28.5
Fletcher Ave NB	12.5
Fletcher Ave SB	11
Garvey Ave EB	40.8
Garvey Ave WB	41.1
Gilman Rd NB	13.1
Gilman Rd SB	17.8
Glendon Way EB	19.9
Glendon Way WB	18.2
I-10 EB	55.9
I-10 EB Ramp	13.7
I-10 EB Ramp 2	15.1
I-10 WB	55.3
I-10 WB Ramp	12.5
Las Tunas Dr EB	0
Las Tunas Dr WB	0
Loftus Dr EB	25.6
Loftus Dr WB	28.4
Lower Azusa Rd EB	36.6
Lower Azusa Rd WB	36.4
Merced Ave NB	7.4
Merced Ave NB	26.5
Merced Ave SB	27.7
Olive St EB	17.2
Olive St WB	16.8
Olney St WB	6.8
Peck Rd NB	42.3
Peck Rd SB	42.5
Ramona Blvd EB	55
Ramona Blvd WB	56.5
Rio Hondo Ave NB	16.5
Rio Hondo Ave SB	12.8
Roseglen St NB	14.8
Roseglen St NB1	11
Roseglen St SB	10.3
Rosemead Blvd NB	36.4
Rosemead Blvd SB	36.2
Rush St EB	25
Rush St WB	20

San Gabriel Blvd NB			0
San Gabriel Blvd SB			0
Santa Anita Ave NB			48.7
Santa Anita Ave SB			47.3
Telstar Ave EB			29.4
Telstar Ave WB			26.3
Temple City Blvd NB			34.7
Temple City Blvd SB			33.2
Tyler Ave NB			55.4
Tyler Ave SB			55.7
Valley Blvd EB			52.7
Valley Blvd WB			50.3
Valley Mall NB			42
Valley Mall SB			40
Walnut Grove NB			0
Walnut Grove SB			0
Whitmore St			22.7
NW corner of Valley and Garvey	GF	65.8	
Aerojet Ave NB			0
Aerojet Ave SB			0
Baldwin Ave NB			30.5
Baldwin Ave SB			29
Chico Ave SB			15.4
Durfee Ave NB			17.2
Durfee Ave NB (South)			0
Durfee Ave SB (South)			22.7
Flair Dr EB			21.5
Flair Dr WB			22
Fletcher Ave NB			7.3
Fletcher Ave SB			5.8
Garvey Ave EB			59.3
Garvey Ave WB			61.1
Gilman Rd NB			17.4
Gilman Rd SB			22.1
Glendon Way EB			0
Glendon Way WB			0
I-10 EB			55.3
I-10 EB Ramp			0
I-10 EB Ramp 2			0
I-10 WB			55
I-10 WB Ramp			6.7
Las Tunas Dr EB			0
Las Tunas Dr WB			0

Loftus Dr EB			18.9
Loftus Dr WB			21.6
Lower Azusa Rd EB			32.8
Lower Azusa Rd WB			32.5
Merced Ave NB			3.8
Merced Ave NB			21.8
Merced Ave SB			22.9
Olive St EB			0
Olive St WB			0
Olney St WB			1.2
Peck Rd NB			43.5
Peck Rd SB			43.5
Ramona Blvd EB			38.7
Ramona Blvd WB			38.9
Rio Hondo Ave NB			12.4
Rio Hondo Ave SB			8.4
Roseglen St NB			15.5
Roseglen St NB1			12.6
Roseglen St SB			10.9
Rosemead Blvd NB			26
Rosemead Blvd SB			25.5
Rush St EB			21.8
Rush St WB			16.7
San Gabriel Blvd NB			0
San Gabriel Blvd SB			0
Santa Anita Ave NB			36.5
Santa Anita Ave SB			36.4
Telstar Ave EB			17.9
Telstar Ave WB			17.4
Temple City Blvd NB			25.9
Temple City Blvd SB			24.9
Tyler Ave NB			36.5
Tyler Ave SB			36.7
Valley Blvd EB			57.4
Valley Blvd WB			55.7
Valley Mall NB			21.8
Valley Mall SB			19.5
Walnut Grove NB			0
Walnut Grove SB			0
Whitmore St			0
NW of Santa Anita at I-10	GF	71.8	
Aerojet Ave NB			15.5
Aerojet Ave SB			15.3

Baldwin Ave NB	39.6
Baldwin Ave SB	38.4
Chico Ave SB	22
Durfee Ave NB	4.3
Durfee Ave NB (South)	0
Durfee Ave SB (South)	16.1
Flair Dr EB	31.4
Flair Dr WB	31.8
Fletcher Ave NB	15.7
Fletcher Ave SB	14.2
Garvey Ave EB	43.3
Garvey Ave WB	43.6
Gilman Rd NB	11.3
Gilman Rd SB	16
Glendon Way EB	21.8
Glendon Way WB	20.2
I-10 EB	67.7
I-10 EB Ramp	11.8
I-10 EB Ramp 2	14.2
I-10 WB	68.1
I-10 WB Ramp	16
Las Tunas Dr EB	0
Las Tunas Dr WB	0
Loftus Dr EB	28.9
Loftus Dr WB	31.7
Lower Azusa Rd EB	35.4
Lower Azusa Rd WB	35.3
Merced Ave NB	10.4
Merced Ave NB	31.6
Merced Ave SB	32.7
Olive St EB	16.8
Olive St WB	16.4
Olney St WB	10.5
Peck Rd NB	39
Peck Rd SB	39.2
Ramona Blvd EB	43.3
Ramona Blvd WB	43.8
Rio Hondo Ave NB	19.5
Rio Hondo Ave SB	15.8
Roseglen St NB	0
Roseglen St NB1	-0.5
Roseglen St SB	0
Rosemead Blvd NB	38.6

Rosemead Blvd SB			38.3
Rush St EB			27.2
Rush St WB			22.3
San Gabriel Blvd NB			0
San Gabriel Blvd SB			0
Santa Anita Ave NB			60.3
Santa Anita Ave SB			61.8
Telstar Ave EB			32
Telstar Ave WB			29.2
Temple City Blvd NB			36.3
Temple City Blvd SB			35
Tyler Ave NB			41.8
Tyler Ave SB			41.3
Valley Blvd EB			45.4
Valley Blvd WB			44.6
Valley Mall NB			30.5
Valley Mall SB			28.4
Walnut Grove NB			28.9
Walnut Grove SB			28.6
Whitmore St			25.3
SE corner of Aerojet and Flair	GF	71.2	
Aerojet Ave NB			52.6
Aerojet Ave SB			51.7
Baldwin Ave NB			37.8
Baldwin Ave SB			36.7
Chico Ave SB			25.2
Durfee Ave NB			0
Durfee Ave NB (South)			0
Durfee Ave SB (South)			0
Flair Dr EB			56.2
Flair Dr WB			54.7
Fletcher Ave NB			15.3
Fletcher Ave SB			13.6
Garvey Ave EB			42.1
Garvey Ave WB			41.9
Gilman Rd NB			0
Gilman Rd SB			0
Glendon Way EB			38
Glendon Way WB			36.3
I-10 EB			68.4
I-10 EB Ramp			35.1
I-10 EB Ramp 2			40
I-10 WB			66.6

I-10 WB Ramp	22.5
Las Tunas Dr EB	26.8
Las Tunas Dr WB	26.6
Loftus Dr EB	29.9
Loftus Dr WB	32.3
Lower Azusa Rd EB	34.2
Lower Azusa Rd WB	34.4
Merced Ave NB	13.5
Merced Ave NB	23.8
Merced Ave SB	25.1
Olive St EB	16.4
Olive St WB	16
Olney St WB	16.8
Peck Rd NB	17.6
Peck Rd SB	18.7
Ramona Blvd EB	16.5
Ramona Blvd WB	16.4
Rio Hondo Ave NB	42.5
Rio Hondo Ave SB	38.2
Roseglen St NB	0
Roseglen St NB1	0
Roseglen St SB	0
Rosemead Blvd NB	53.4
Rosemead Blvd SB	52.9
Rush St EB	29.1
Rush St WB	24.2
San Gabriel Blvd NB	33.5
San Gabriel Blvd SB	34
Santa Anita Ave NB	32.1
Santa Anita Ave SB	31.5
Telstar Ave EB	50.9
Telstar Ave WB	47
Temple City Blvd NB	39.3
Temple City Blvd SB	38.7
Tyler Ave NB	25
Tyler Ave SB	28.1
Valley Blvd EB	41.4
Valley Blvd WB	41.9
Valley Mall NB	16.6
Valley Mall SB	14.2
Walnut Grove NB	38.9
Walnut Grove SB	38.4
Whitmore St	39

SE corner of Baldwin and Valley	GF	66.3
Aerojet Ave NB		22.8
Aerojet Ave SB		22.7
Baldwin Ave NB		62.5
Baldwin Ave SB		58.5
Chico Ave SB		21.4
Durfee Ave NB		0
Durfee Ave NB (South)		0
Durfee Ave SB (South)		0
Flair Dr EB		36.9
Flair Dr WB		37.2
Fletcher Ave NB		20
Fletcher Ave SB		18.5
Garvey Ave EB		38.1
Garvey Ave WB		38.2
Gilman Rd NB		0
Gilman Rd SB		0
Glendon Way EB		25.4
Glendon Way WB		23.8
I-10 EB		53.3
I-10 EB Ramp		20.6
I-10 EB Ramp 2		23.3
I-10 WB		52.7
I-10 WB Ramp		22
Las Tunas Dr EB		27.4
Las Tunas Dr WB		27.2
Loftus Dr EB		40.5
Loftus Dr WB		43.9
Lower Azusa Rd EB		38.8
Lower Azusa Rd WB		38.9
Merced Ave NB		9.8
Merced Ave NB		27.5
Merced Ave SB		28.7
Olive St EB		20.2
Olive St WB		19.8
Olney St WB		16.6
Peck Rd NB		34.5
Peck Rd SB		34.3
Ramona Blvd EB		32.6
Ramona Blvd WB		33.1
Rio Hondo Ave NB		20.6
Rio Hondo Ave SB		17.1
Roseglen St NB		0

Roseglen St NB1			0
Roseglen St SB			0
Rosemead Blvd NB			40.9
Rosemead Blvd SB			40.6
Rush St EB			26
Rush St WB			21
San Gabriel Blvd NB			28.3
San Gabriel Blvd SB			28.9
Santa Anita Ave NB			41.2
Santa Anita Ave SB			40.7
Telstar Ave EB			34.2
Telstar Ave WB			30.7
Temple City Blvd NB			45.7
Temple City Blvd SB			44.2
Tyler Ave NB			34.6
Tyler Ave SB			36.1
Valley Blvd EB			58
Valley Blvd WB			57.4
Valley Mall NB			24.7
Valley Mall SB			22.3
Walnut Grove NB			31.7
Walnut Grove SB			31.4
Whitmore St			22.7
SE corner of Chico and Garvey	GF	64.4	
Aerojet Ave NB			26.3
Aerojet Ave SB			26.1
Baldwin Ave NB			36.5
Baldwin Ave SB			35.3
Chico Ave SB			50
Durfee Ave NB			0
Durfee Ave NB (South)			0
Durfee Ave SB (South)			0
Flair Dr EB			33.6
Flair Dr WB			33.5
Fletcher Ave NB			21.2
Fletcher Ave SB			19.9
Garvey Ave EB			61
Garvey Ave WB			59.9
Gilman Rd NB			0
Gilman Rd SB			0
Glendon Way EB			26.1
Glendon Way WB			24.5
I-10 EB			49.3

I-10 EB Ramp	22.7
I-10 EB Ramp 2	25.6
I-10 WB	48.4
I-10 WB Ramp	18.2
Las Tunas Dr EB	0
Las Tunas Dr WB	0
Loftus Dr EB	27.6
Loftus Dr WB	30.1
Lower Azusa Rd EB	30.3
Lower Azusa Rd WB	30.2
Merced Ave NB	40.7
Merced Ave NB	34.3
Merced Ave SB	35.7
Olive St EB	0
Olive St WB	0
Olney St WB	12.3
Peck Rd NB	31.2
Peck Rd SB	31.4
Ramona Blvd EB	28.3
Ramona Blvd WB	28.8
Rio Hondo Ave NB	28.4
Rio Hondo Ave SB	24.9
Roseglen St NB	0
Roseglen St NB1	0
Roseglen St SB	0
Rosemead Blvd NB	49
Rosemead Blvd SB	48.7
Rush St EB	35.4
Rush St WB	30.6
San Gabriel Blvd NB	29.3
San Gabriel Blvd SB	29.9
Santa Anita Ave NB	37
Santa Anita Ave SB	37
Telstar Ave EB	39.3
Telstar Ave WB	36.3
Temple City Blvd NB	35.6
Temple City Blvd SB	34.8
Tyler Ave NB	31.5
Tyler Ave SB	31.7
Valley Blvd EB	38
Valley Blvd WB	37.8
Valley Mall NB	18.7
Valley Mall SB	16.4

Walnut Grove NB			34.2
Walnut Grove SB			33.7
Whitmore St			36.4
SE corner of Rosemead and Garvey	GF	66.9	
Aerojet Ave NB			28.8
Aerojet Ave SB			28.6
Baldwin Ave NB			35.3
Baldwin Ave SB			34.1
Chico Ave SB			38.2
Durfee Ave NB			0
Durfee Ave NB (South)			0
Durfee Ave SB (South)			0
Flair Dr EB			33.5
Flair Dr WB			33.2
Fletcher Ave NB			20.6
Fletcher Ave SB			19.2
Garvey Ave EB			61.6
Garvey Ave WB			60.8
Gilman Rd NB			0
Gilman Rd SB			0
Glendon Way EB			27.8
Glendon Way WB			26.1
I-10 EB			49
I-10 EB Ramp			24.9
I-10 EB Ramp 2			27.8
I-10 WB			48.2
I-10 WB Ramp			17.5
Las Tunas Dr EB			0
Las Tunas Dr WB			0
Loftus Dr EB			26.6
Loftus Dr WB			29.1
Lower Azusa Rd EB			29.8
Lower Azusa Rd WB			29.8
Merced Ave NB			26.4
Merced Ave NB			29.8
Merced Ave SB			31.2
Olive St EB			0
Olive St WB			0
Olney St WB			11.7
Peck Rd NB			29.1
Peck Rd SB			29.2
Ramona Blvd EB			26
Ramona Blvd WB			26.7

Rio Hondo Ave NB			32.1
Rio Hondo Ave SB			28.3
Roseglen St NB			0
Roseglen St NB1			0
Roseglen St SB			0
Rosemead Blvd NB			60.5
Rosemead Blvd SB			59.6
Rush St EB			35.6
Rush St WB			30.7
San Gabriel Blvd NB			30.7
San Gabriel Blvd SB			31.3
Santa Anita Ave NB			35
Santa Anita Ave SB			35.1
Telstar Ave EB			41.8
Telstar Ave WB			38.1
Temple City Blvd NB			34.7
Temple City Blvd SB			33.9
Tyler Ave NB			29.7
Tyler Ave SB			30
Valley Blvd EB			37.5
Valley Blvd WB			37.5
Valley Mall NB			17.3
Valley Mall SB			15
Walnut Grove NB			36.1
Walnut Grove SB			35.7
Whitmore St			42.2
SE corner of Temple City at Loftus	GF	68.5	
Aerojet Ave NB			27
Aerojet Ave SB			26.9
Baldwin Ave NB			47.6
Baldwin Ave SB			47
Chico Ave SB			24.3
Durfee Ave NB			0
Durfee Ave NB (South)			0
Durfee Ave SB (South)			0
Flair Dr EB			46.5
Flair Dr WB			46.9
Fletcher Ave NB			30
Fletcher Ave SB			28.4
Garvey Ave EB			39.7
Garvey Ave WB			39.7
Gilman Rd NB			0
Gilman Rd SB			0

Glendon Way EB	28.6
Glendon Way WB	27.2
I-10 EB	63.1
I-10 EB Ramp	24.4
I-10 EB Ramp 2	27.2
I-10 WB	61.8
I-10 WB Ramp	38.5
Las Tunas Dr EB	27
Las Tunas Dr WB	26.8
Loftus Dr EB	56.3
Loftus Dr WB	57.3
Lower Azusa Rd EB	36.6
Lower Azusa Rd WB	36.7
Merced Ave NB	12.7
Merced Ave NB	29.1
Merced Ave SB	30.4
Olive St EB	18.5
Olive St WB	18.1
Olney St WB	33.2
Peck Rd NB	32.7
Peck Rd SB	32.9
Ramona Blvd EB	30.3
Ramona Blvd WB	30.8
Rio Hondo Ave NB	27.6
Rio Hondo Ave SB	24.1
Roseglen St NB	0
Roseglen St NB1	0
Roseglen St SB	0
Rosemead Blvd NB	43.3
Rosemead Blvd SB	42.9
Rush St EB	27.8
Rush St WB	22.9
San Gabriel Blvd NB	29.9
San Gabriel Blvd SB	30.5
Santa Anita Ave NB	38.6
Santa Anita Ave SB	39.5
Telstar Ave EB	39.2
Telstar Ave WB	38.2
Temple City Blvd NB	60.4
Temple City Blvd SB	60.2
Tyler Ave NB	32.8
Tyler Ave SB	34
Valley Blvd EB	44.9

Valley Blvd WB			45.2
Valley Mall NB			21.4
Valley Mall SB			19.1
Walnut Grove NB			33.6
Walnut Grove SB			33.2
Whitmore St			21.7
SE corner of Temple City at Valley	GF	65.6	
Aerojet Ave NB			23.5
Aerojet Ave SB			23.4
Baldwin Ave NB			48.2
Baldwin Ave SB			46.2
Chico Ave SB			20
Durfee Ave NB			0
Durfee Ave NB (South)			0
Durfee Ave SB (South)			0
Flair Dr EB			34.4
Flair Dr WB			34.4
Fletcher Ave NB			18.4
Fletcher Ave SB			16.9
Garvey Ave EB			36.4
Garvey Ave WB			36.5
Gilman Rd NB			0
Gilman Rd SB			0
Glendon Way EB			26.8
Glendon Way WB			25.2
I-10 EB			49.9
I-10 EB Ramp			21.4
I-10 EB Ramp 2			24.1
I-10 WB			49.1
I-10 WB Ramp			20.1
Las Tunas Dr EB			29.2
Las Tunas Dr WB			29
Loftus Dr EB			33.8
Loftus Dr WB			36.4
Lower Azusa Rd EB			41.3
Lower Azusa Rd WB			41.5
Merced Ave NB			8.3
Merced Ave NB			24.6
Merced Ave SB			25.9
Olive St EB			21.7
Olive St WB			21.3
Olney St WB			14.8
Peck Rd NB			32.5

Peck Rd SB			32.4
Ramona Blvd EB			29.8
Ramona Blvd WB			30.3
Rio Hondo Ave NB			23
Rio Hondo Ave SB			19.7
Roseglen St NB			0
Roseglen St NB1			0
Roseglen St SB			0
Rosemead Blvd NB			42.3
Rosemead Blvd SB			42
Rush St EB			24.9
Rush St WB			20
San Gabriel Blvd NB			29.4
San Gabriel Blvd SB			30
Santa Anita Ave NB			37.7
Santa Anita Ave SB			37.5
Telstar Ave EB			34.3
Telstar Ave WB			30.5
Temple City Blvd NB			60.1
Temple City Blvd SB			56.8
Tyler Ave NB			32.5
Tyler Ave SB			34.2
Valley Blvd EB			59
Valley Blvd WB			59.6
Valley Mall NB			21.1
Valley Mall SB			18.8
Walnut Grove NB			33.2
Walnut Grove SB			32.9
Whitmore St			21.8
South of Santa Anita at Tyler	GF	65.2	
Aerojet Ave NB			13.7
Aerojet Ave SB			13.6
Baldwin Ave NB			37.6
Baldwin Ave SB			36.6
Chico Ave SB			15.3
Durfee Ave NB			17.9
Durfee Ave NB (South)			0
Durfee Ave SB (South)			18.9
Flair Dr EB			25
Flair Dr WB			25.1
Fletcher Ave NB			9.3
Fletcher Ave SB			7.8
Garvey Ave EB			34.8

Garvey Ave WB	35.1
Gilman Rd NB	13.9
Gilman Rd SB	18.6
Glendon Way EB	18.2
Glendon Way WB	16.6
I-10 EB	46.1
I-10 EB Ramp	0
I-10 EB Ramp 2	15.9
I-10 WB	45.8
I-10 WB Ramp	9.5
Las Tunas Dr EB	0
Las Tunas Dr WB	1.5
Loftus Dr EB	22.5
Loftus Dr WB	25.3
Lower Azusa Rd EB	42.2
Lower Azusa Rd WB	41.8
Merced Ave NB	3.6
Merced Ave NB	21.2
Merced Ave SB	22.4
Olive St EB	20
Olive St WB	19.7
Olney St WB	3.9
Peck Rd NB	41.3
Peck Rd SB	40.8
Ramona Blvd EB	37.7
Ramona Blvd WB	38.2
Rio Hondo Ave NB	10.6
Rio Hondo Ave SB	7
Roseglen St NB	17.9
Roseglen St NB1	13.3
Roseglen St SB	13.3
Rosemead Blvd NB	32.7
Rosemead Blvd SB	33
Rush St EB	0
Rush St WB	0
San Gabriel Blvd NB	0
San Gabriel Blvd SB	0
Santa Anita Ave NB	59.4
Santa Anita Ave SB	59.3
Telstar Ave EB	20.8
Telstar Ave WB	20.3
Temple City Blvd NB	34.3
Temple City Blvd SB	32.6

Tyler Ave NB			54.9
Tyler Ave SB			60.2
Valley Blvd EB			42.1
Valley Blvd WB			41.1
Valley Mall NB			26.4
Valley Mall SB			24
Walnut Grove NB			0
Walnut Grove SB			0
Whitmore St			19.8
SW corner of Baldwin and Lower Azusa	GF	65.6	
Aerojet Ave NB			18.2
Aerojet Ave SB			18.1
Baldwin Ave NB			59.7
Baldwin Ave SB			60.1
Chico Ave SB			16.2
Durfee Ave NB			0
Durfee Ave NB (South)			0
Durfee Ave SB (South)			0
Flair Dr EB			27.9
Flair Dr WB			27.8
Fletcher Ave NB			12
Fletcher Ave SB			10.5
Garvey Ave EB			33.2
Garvey Ave WB			33.3
Gilman Rd NB			0
Gilman Rd SB			0
Glendon Way EB			22
Glendon Way WB			20.4
I-10 EB			44.9
I-10 EB Ramp			16.7
I-10 EB Ramp 2			19.2
I-10 WB			44.4
I-10 WB Ramp			12.6
Las Tunas Dr EB			30.3
Las Tunas Dr WB			30.1
Loftus Dr EB			25.7
Loftus Dr WB			28.5
Lower Azusa Rd EB			59
Lower Azusa Rd WB			58.2
Merced Ave NB			4.5
Merced Ave NB			21.1
Merced Ave SB			22.4
Olive St EB			27.8

Olive St WB			27.4
Olney St WB			7.1
Peck Rd NB			33.8
Peck Rd SB			33.4
Ramona Blvd EB			30.3
Ramona Blvd WB			30.7
Rio Hondo Ave NB			16.4
Rio Hondo Ave SB			13
Roseglen St NB			0
Roseglen St NB1			0
Roseglen St SB			0
Rosemead Blvd NB			38.9
Rosemead Blvd SB			38.5
Rush St EB			0
Rush St WB			0
San Gabriel Blvd NB			23.1
San Gabriel Blvd SB			23.7
Santa Anita Ave NB			37.6
Santa Anita Ave SB			37.6
Telstar Ave EB			29.2
Telstar Ave WB			24.8
Temple City Blvd NB			44.7
Temple City Blvd SB			42.5
Tyler Ave NB			33.9
Tyler Ave SB			36.1
Valley Blvd EB			40.7
Valley Blvd WB			40.9
Valley Mall NB			20.8
Valley Mall SB			18.4
Walnut Grove NB			28.7
Walnut Grove SB			28.7
Whitmore St			16.4
SW corner of Durfee and Ramona	GF	62.8	
Aerojet Ave NB			0
Aerojet Ave SB			0
Baldwin Ave NB			0
Baldwin Ave SB			0
Chico Ave SB			0
Durfee Ave NB			27.3
Durfee Ave NB (South)			0
Durfee Ave SB (South)			48.6
Flair Dr EB			0
Flair Dr WB			0

Fletcher Ave NB	0
Fletcher Ave SB	0
Garvey Ave EB	33.6
Garvey Ave WB	34
Gilman Rd NB	32.4
Gilman Rd SB	37.2
Glendon Way EB	0
Glendon Way WB	0
I-10 EB	44.9
I-10 EB Ramp	0
I-10 EB Ramp 2	0
I-10 WB	45.3
I-10 WB Ramp	0
Las Tunas Dr EB	0
Las Tunas Dr WB	0
Loftus Dr EB	0
Loftus Dr WB	0
Lower Azusa Rd EB	37.6
Lower Azusa Rd WB	37.3
Merced Ave NB	0
Merced Ave NB	0
Merced Ave SB	0
Olive St EB	0
Olive St WB	0
Olney St WB	0
Peck Rd NB	40.3
Peck Rd SB	39.5
Ramona Blvd EB	59.9
Ramona Blvd WB	58.6
Rio Hondo Ave NB	0
Rio Hondo Ave SB	0
Roseglen St NB	22.9
Roseglen St NB1	22.8
Roseglen St SB	18.3
Rosemead Blvd NB	0
Rosemead Blvd SB	0
Rush St EB	0
Rush St WB	0
San Gabriel Blvd NB	0
San Gabriel Blvd SB	0
Santa Anita Ave NB	32.8
Santa Anita Ave SB	32.8
Telstar Ave EB	0

Telstar Ave WB			0
Temple City Blvd NB			0
Temple City Blvd SB			0
Tyler Ave NB			32.3
Tyler Ave SB			34.1
Valley Blvd EB			36.2
Valley Blvd WB			35.5
Valley Mall NB			17.4
Valley Mall SB			15.1
Walnut Grove NB			0
Walnut Grove SB			0
Whitmore St			0
SW corner of Fletcher and Flair	GF	73.5	
Aerojet Ave NB			22.1
Aerojet Ave SB			21.9
Baldwin Ave NB			43.2
Baldwin Ave SB			42.4
Chico Ave SB			26.6
Durfee Ave NB			0
Durfee Ave NB (South)			0
Durfee Ave SB (South)			0
Flair Dr EB			61.1
Flair Dr WB			58.9
Fletcher Ave NB			49.7
Fletcher Ave SB			49
Garvey Ave EB			41.2
Garvey Ave WB			41.1
Gilman Rd NB			0
Gilman Rd SB			0
Glendon Way EB			30.4
Glendon Way WB			28.9
I-10 EB			70.9
I-10 EB Ramp			22.5
I-10 EB Ramp 2			25
I-10 WB			68.8
I-10 WB Ramp			38.7
Las Tunas Dr EB			26.5
Las Tunas Dr WB			26.3
Loftus Dr EB			38.6
Loftus Dr WB			40.8
Lower Azusa Rd EB			35.2
Lower Azusa Rd WB			35.2
Merced Ave NB			15

Merced Ave NB			29.7
Merced Ave SB			31
Olive St EB			17.3
Olive St WB			16.9
Olney St WB			32
Peck Rd NB			31.8
Peck Rd SB			31.9
Ramona Blvd EB			29.7
Ramona Blvd WB			29.6
Rio Hondo Ave NB			31.7
Rio Hondo Ave SB			27.8
Roseglen St NB			0
Roseglen St NB1			0
Roseglen St SB			0
Rosemead Blvd NB			43.9
Rosemead Blvd SB			43.1
Rush St EB			29.2
Rush St WB			24.3
San Gabriel Blvd NB			29.5
San Gabriel Blvd SB			30.1
Santa Anita Ave NB			37.7
Santa Anita Ave SB			37.6
Telstar Ave EB			43.4
Telstar Ave WB			43
Temple City Blvd NB			47
Temple City Blvd SB			48.6
Tyler Ave NB			32.4
Tyler Ave SB			33.1
Valley Blvd EB			42.5
Valley Blvd WB			42.8
Valley Mall NB			20.2
Valley Mall SB			17.9
Walnut Grove NB			32.9
Walnut Grove SB			32.6
Whitmore St			11.7
SW corner of Gilman and Ramona	GF	63.6	
Aerojet Ave NB			0
Aerojet Ave SB			0
Baldwin Ave NB			0
Baldwin Ave SB			0
Chico Ave SB			0
Durfee Ave NB			29.7
Durfee Ave NB (South)			0

Durfee Ave SB (South)	36.7
Flair Dr EB	0
Flair Dr WB	0
Fletcher Ave NB	0
Fletcher Ave SB	0
Garvey Ave EB	31.5
Garvey Ave WB	31.9
Gilman Rd NB	45.9
Gilman Rd SB	51.3
Glendon Way EB	0
Glendon Way WB	0
I-10 EB	42.5
I-10 EB Ramp	0
I-10 EB Ramp 2	0
I-10 WB	42.8
I-10 WB Ramp	0
Las Tunas Dr EB	0
Las Tunas Dr WB	0
Loftus Dr EB	0
Loftus Dr WB	0
Lower Azusa Rd EB	37.5
Lower Azusa Rd WB	37.3
Merced Ave NB	0
Merced Ave NB	0
Merced Ave SB	0
Olive St EB	0
Olive St WB	0
Olney St WB	0
Peck Rd NB	38.2
Peck Rd SB	37.5
Ramona Blvd EB	60.8
Ramona Blvd WB	59.1
Rio Hondo Ave NB	0
Rio Hondo Ave SB	0
Roseglen St NB	23.7
Roseglen St NB1	25.1
Roseglen St SB	19.1
Rosemead Blvd NB	0
Rosemead Blvd SB	0
Rush St EB	0
Rush St WB	0
San Gabriel Blvd NB	0
San Gabriel Blvd SB	0

Santa Anita Ave NB			31.1
Santa Anita Ave SB			31.1
Telstar Ave EB			0
Telstar Ave WB			0
Temple City Blvd NB			0
Temple City Blvd SB			0
Tyler Ave NB			30.8
Tyler Ave SB			32.6
Valley Blvd EB			34.2
Valley Blvd WB			33.2
Valley Mall NB			15.9
Valley Mall SB			13.7
Walnut Grove NB			0
Walnut Grove SB			0
Whitmore St			0
SW corner of Merced and Garvey	GF	62.4	
Aerojet Ave NB			21.9
Aerojet Ave SB			21.7
Baldwin Ave NB			36.6
Baldwin Ave SB			35.5
Chico Ave SB			29.4
Durfee Ave NB			0
Durfee Ave NB (South)			0
Durfee Ave SB (South)			0
Flair Dr EB			31.4
Flair Dr WB			31.5
Fletcher Ave NB			17.6
Fletcher Ave SB			16.2
Garvey Ave EB			56.9
Garvey Ave WB			56.4
Gilman Rd NB			0
Gilman Rd SB			0
Glendon Way EB			23
Glendon Way WB			21.4
I-10 EB			50.2
I-10 EB Ramp			19.1
I-10 EB Ramp 2			21.8
I-10 WB			49.5
I-10 WB Ramp			16.1
Las Tunas Dr EB			0
Las Tunas Dr WB			0
Loftus Dr EB			27.1
Loftus Dr WB			29.8

Lower Azusa Rd EB			31.7
Lower Azusa Rd WB			31.6
Merced Ave NB			17.9
Merced Ave NB			53.7
Merced Ave SB			53.8
Olive St EB			0
Olive St WB			0
Olney St WB			10.3
Peck Rd NB			34.9
Peck Rd SB			34.9
Ramona Blvd EB			31.9
Ramona Blvd WB			32.4
Rio Hondo Ave NB			22.2
Rio Hondo Ave SB			18.6
Roseglen St NB			0
Roseglen St NB1			0
Roseglen St SB			0
Rosemead Blvd NB			42.1
Rosemead Blvd SB			41.8
Rush St EB			32.9
Rush St WB			28
San Gabriel Blvd NB			25
San Gabriel Blvd SB			25.6
Santa Anita Ave NB			42.1
Santa Anita Ave SB			42.4
Telstar Ave EB			34.7
Telstar Ave WB			31.6
Temple City Blvd NB			34.7
Temple City Blvd SB			33.7
Tyler Ave NB			35.3
Tyler Ave SB			35.2
Valley Blvd EB			39
Valley Blvd WB			38.6
Valley Mall NB			21.4
Valley Mall SB			19.1
Walnut Grove NB			30.8
Walnut Grove SB			30.3
Whitmore St			29.4
SW corner of Peck and Garvey	GF	66.8	
Aerojet Ave NB			13.8
Aerojet Ave SB			13.7
Baldwin Ave NB			32.7
Baldwin Ave SB			31.4

Chico Ave SB	18.5
Durfee Ave NB	15
Durfee Ave NB (South)	0
Durfee Ave SB (South)	18.9
Flair Dr EB	24.2
Flair Dr WB	24.6
Fletcher Ave NB	9.9
Fletcher Ave SB	8.4
Garvey Ave EB	59.8
Garvey Ave WB	58.8
Gilman Rd NB	13.9
Gilman Rd SB	18.7
Glendon Way EB	-0.8
Glendon Way WB	-0.9
I-10 EB	53.1
I-10 EB Ramp	8.4
I-10 EB Ramp 2	14.5
I-10 WB	52.8
I-10 WB Ramp	9.3
Las Tunas Dr EB	0
Las Tunas Dr WB	0
Loftus Dr EB	21.6
Loftus Dr WB	24.4
Lower Azusa Rd EB	32.8
Lower Azusa Rd WB	32.5
Merced Ave NB	6.8
Merced Ave NB	25.5
Merced Ave SB	26.7
Olive St EB	0
Olive St WB	0
Olney St WB	3.6
Peck Rd NB	60.8
Peck Rd SB	61.1
Ramona Blvd EB	37.5
Ramona Blvd WB	37.9
Rio Hondo Ave NB	14.9
Rio Hondo Ave SB	11.2
Roseglen St NB	13.7
Roseglen St NB1	10.4
Roseglen St SB	9.1
Rosemead Blvd NB	34.1
Rosemead Blvd SB	34
Rush St EB	25.7

Rush St WB			20.7
San Gabriel Blvd NB			0
San Gabriel Blvd SB			0
Santa Anita Ave NB			40.4
Santa Anita Ave SB			40.4
Telstar Ave EB			27.7
Telstar Ave WB			24.2
Temple City Blvd NB			30.4
Temple City Blvd SB			29
Tyler Ave NB			44.7
Tyler Ave SB			43.6
Valley Blvd EB			43.9
Valley Blvd WB			43
Valley Mall NB			24.1
Valley Mall SB			21.9
Walnut Grove NB			0
Walnut Grove SB			0
Whitmore St			21.2
SW corner of Rio Hondo and Flair	GF	70.8	
Aerojet Ave NB			40.5
Aerojet Ave SB			40.2
Baldwin Ave NB			38.3
Baldwin Ave SB			36.9
Chico Ave SB			26.3
Durfee Ave NB			0
Durfee Ave NB (South)			0
Durfee Ave SB (South)			0
Flair Dr EB			55.6
Flair Dr WB			54.1
Fletcher Ave NB			18.8
Fletcher Ave SB			17.3
Garvey Ave EB			42.3
Garvey Ave WB			42.1
Gilman Rd NB			0
Gilman Rd SB			0
Glendon Way EB			36.3
Glendon Way WB			34.7
I-10 EB			67.8
I-10 EB Ramp			32.3
I-10 EB Ramp 2			35.9
I-10 WB			66.1
I-10 WB Ramp			19.3
Las Tunas Dr EB			26.6

Las Tunas Dr WB			26.4
Loftus Dr EB			32
Loftus Dr WB			34.2
Lower Azusa Rd EB			34.6
Lower Azusa Rd WB			34.7
Merced Ave NB			14.5
Merced Ave NB			14.9
Merced Ave SB			16.1
Olive St EB			16.8
Olive St WB			16.4
Olney St WB			17.2
Peck Rd NB			20.7
Peck Rd SB			21.3
Ramona Blvd EB			13.9
Ramona Blvd WB			14.4
Rio Hondo Ave NB			57.6
Rio Hondo Ave SB			54.4
Roseglen St NB			0
Roseglen St NB1			0
Roseglen St SB			0
Rosemead Blvd NB			51.6
Rosemead Blvd SB			51.2
Rush St EB			29.4
Rush St WB			24.4
San Gabriel Blvd NB			34.6
San Gabriel Blvd SB			35.2
Santa Anita Ave NB			29.2
Santa Anita Ave SB			29.9
Telstar Ave EB			49.7
Telstar Ave WB			47.3
Temple City Blvd NB			41
Temple City Blvd SB			40.6
Tyler Ave NB			24.4
Tyler Ave SB			26.9
Valley Blvd EB			41.1
Valley Blvd WB			41.8
Valley Mall NB			9.2
Valley Mall SB			6.7
Walnut Grove NB			39.4
Walnut Grove SB			38.9
Whitmore St			40.7
SW corner of Rosemead and Las Tunas Dr	GF	65.0	
Aerojet Ave NB			15.1

Aerojet Ave SB	15
Baldwin Ave NB	33.7
Baldwin Ave SB	33.4
Chico Ave SB	0
Durfee Ave NB	0
Durfee Ave NB (South)	0
Durfee Ave SB (South)	0
Flair Dr EB	22.5
Flair Dr WB	22.3
Fletcher Ave NB	6.6
Fletcher Ave SB	5.1
Garvey Ave EB	0
Garvey Ave WB	0
Gilman Rd NB	0
Gilman Rd SB	0
Glendon Way EB	20.5
Glendon Way WB	18.9
I-10 EB	38.6
I-10 EB Ramp	14.9
I-10 EB Ramp 2	17.2
I-10 WB	38
I-10 WB Ramp	6.6
Las Tunas Dr EB	57.3
Las Tunas Dr WB	56.1
Loftus Dr EB	18.1
Loftus Dr WB	20.7
Lower Azusa Rd EB	34
Lower Azusa Rd WB	34.2
Merced Ave NB	0
Merced Ave NB	0
Merced Ave SB	0
Olive St EB	21.4
Olive St WB	21
Olney St WB	1.1
Peck Rd NB	0
Peck Rd SB	0
Ramona Blvd EB	0
Ramona Blvd WB	0
Rio Hondo Ave NB	17.1
Rio Hondo Ave SB	13.3
Roseglen St NB	0
Roseglen St NB1	0
Roseglen St SB	0

Rosemead Blvd NB			59.9
Rosemead Blvd SB			60.8
Rush St EB			0
Rush St WB			0
San Gabriel Blvd NB			28.5
San Gabriel Blvd SB			28.9
Santa Anita Ave NB			0
Santa Anita Ave SB			0
Telstar Ave EB			26.1
Telstar Ave WB			21.7
Temple City Blvd NB			34
Temple City Blvd SB			32.2
Tyler Ave NB			0
Tyler Ave SB			0
Valley Blvd EB			34.2
Valley Blvd WB			34.7
Valley Mall NB			0
Valley Mall SB			0
Walnut Grove NB			29.8
Walnut Grove SB			29.8
Whitmore St			0
SW corner of Rosemead and Valley	GF	68.5	
Aerojet Ave NB			26.9
Aerojet Ave SB			26.8
Baldwin Ave NB			36.2
Baldwin Ave SB			35.1
Chico Ave SB			19.3
Durfee Ave NB			0
Durfee Ave NB (South)			0
Durfee Ave SB (South)			0
Flair Dr EB			32.3
Flair Dr WB			32
Fletcher Ave NB			14.2
Fletcher Ave SB			12.6
Garvey Ave EB			36.4
Garvey Ave WB			36.2
Gilman Rd NB			0
Gilman Rd SB			0
Glendon Way EB			36.4
Glendon Way WB			35
I-10 EB			50.6
I-10 EB Ramp			28.2
I-10 EB Ramp 2			30.9

I-10 WB	50
I-10 WB Ramp	15.2
Las Tunas Dr EB	30
Las Tunas Dr WB	29.8
Loftus Dr EB	25.4
Loftus Dr WB	27.9
Lower Azusa Rd EB	38.7
Lower Azusa Rd WB	38.5
Merced Ave NB	7.5
Merced Ave NB	19.1
Merced Ave SB	20.3
Olive St EB	18
Olive St WB	17.6
Olney St WB	9.7
Peck Rd NB	0
Peck Rd SB	0
Ramona Blvd EB	21.9
Ramona Blvd WB	22.5
Rio Hondo Ave NB	27.4
Rio Hondo Ave SB	23.6
Roseglen St NB	0
Roseglen St NB1	0
Roseglen St SB	0
Rosemead Blvd NB	63.7
Rosemead Blvd SB	64
Rush St EB	25
Rush St WB	20.1
San Gabriel Blvd NB	36
San Gabriel Blvd SB	36.5
Santa Anita Ave NB	32
Santa Anita Ave SB	32
Telstar Ave EB	36.8
Telstar Ave WB	31.9
Temple City Blvd NB	38.4
Temple City Blvd SB	37
Tyler Ave NB	26.2
Tyler Ave SB	27.3
Valley Blvd EB	60.3
Valley Blvd WB	59.1
Valley Mall NB	15.3
Valley Mall SB	13
Walnut Grove NB	42.1
Walnut Grove SB	41.8

Whitmore St			28.6
SW corner of Santa Anita and Garvey	GF	65.5	
Aerojet Ave NB			18.7
Aerojet Ave SB			18.6
Baldwin Ave NB			35.6
Baldwin Ave SB			34.4
Chico Ave SB			23.9
Durfee Ave NB			0
Durfee Ave NB (South)			0
Durfee Ave SB (South)			15.4
Flair Dr EB			28.6
Flair Dr WB			28.9
Fletcher Ave NB			14.4
Fletcher Ave SB			12.9
Garvey Ave EB			59.9
Garvey Ave WB			58.9
Gilman Rd NB			8.2
Gilman Rd SB			12.9
Glendon Way EB			14.5
Glendon Way WB			11.6
I-10 EB			52
I-10 EB Ramp			16.8
I-10 EB Ramp 2			19.4
I-10 WB			51.3
I-10 WB Ramp			13.5
Las Tunas Dr EB			0
Las Tunas Dr WB			0
Loftus Dr EB			25.3
Loftus Dr WB			28.1
Lower Azusa Rd EB			32.1
Lower Azusa Rd WB			32.1
Merced Ave NB			12.3
Merced Ave NB			34.4
Merced Ave SB			35.5
Olive St EB			0
Olive St WB			0
Olney St WB			7.7
Peck Rd NB			38.4
Peck Rd SB			38.6
Ramona Blvd EB			35
Ramona Blvd WB			35.4
Rio Hondo Ave NB			19.1
Rio Hondo Ave SB			15.4

Roseglen St NB			0
Roseglen St NB1			0
Roseglen St SB			0
Rosemead Blvd NB			38.8
Rosemead Blvd SB			38.6
Rush St EB			29.9
Rush St WB			24.9
San Gabriel Blvd NB			0
San Gabriel Blvd SB			0
Santa Anita Ave NB			58.3
Santa Anita Ave SB			58.8
Telstar Ave EB			31.7
Telstar Ave WB			28.4
Temple City Blvd NB			33.4
Temple City Blvd SB			32.2
Tyler Ave NB			40.6
Tyler Ave SB			39.8
Valley Blvd EB			40.3
Valley Blvd WB			39.7
Valley Mall NB			23.8
Valley Mall SB			21.5
Walnut Grove NB			28.1
Walnut Grove SB			27.6
Whitmore St			25.5
SW corner of Santa Anita and Lower Azusa	GF	65.0	
Aerojet Ave NB			0
Aerojet Ave SB			0
Baldwin Ave NB			35.8
Baldwin Ave SB			35.2
Chico Ave SB			0
Durfee Ave NB			19
Durfee Ave NB (South)			0
Durfee Ave SB (South)			18.3
Flair Dr EB			21.3
Flair Dr WB			21.9
Fletcher Ave NB			6.8
Fletcher Ave SB			5.3
Garvey Ave EB			31
Garvey Ave WB			31.4
Gilman Rd NB			13.6
Gilman Rd SB			18.3
Glendon Way EB			0
Glendon Way WB			0

I-10 EB	42.3
I-10 EB Ramp	0
I-10 EB Ramp 2	0
I-10 WB	42.1
I-10 WB Ramp	7
Las Tunas Dr EB	18.4
Las Tunas Dr WB	18.2
Loftus Dr EB	19.6
Loftus Dr WB	22.3
Lower Azusa Rd EB	60.8
Lower Azusa Rd WB	59.3
Merced Ave NB	0
Merced Ave NB	18.2
Merced Ave SB	19.5
Olive St EB	20.8
Olive St WB	20.5
Olney St WB	1.3
Peck Rd NB	40.7
Peck Rd SB	40.1
Ramona Blvd EB	34.5
Ramona Blvd WB	34.8
Rio Hondo Ave NB	7.8
Rio Hondo Ave SB	0
Roseglen St NB	19.9
Roseglen St NB1	14.4
Roseglen St SB	15.3
Rosemead Blvd NB	0
Rosemead Blvd SB	0
Rush St EB	0
Rush St WB	0
San Gabriel Blvd NB	0
San Gabriel Blvd SB	0
Santa Anita Ave NB	39.7
Santa Anita Ave SB	40
Telstar Ave EB	14.2
Telstar Ave WB	14.1
Temple City Blvd NB	32.5
Temple City Blvd SB	30.7
Tyler Ave NB	55.1
Tyler Ave SB	58.1
Valley Blvd EB	37
Valley Blvd WB	36.4
Valley Mall NB	20.4

Valley Mall SB			18
Walnut Grove NB			0
Walnut Grove SB			0
Whitmore St			0
SW corner of Telstar and Flair	GF	73.4	
Aerojet Ave NB			20.1
Aerojet Ave SB			20
Baldwin Ave NB			47.2
Baldwin Ave SB			46.8
Chico Ave SB			26.4
Durfee Ave NB			0
Durfee Ave NB (South)			0
Durfee Ave SB (South)			0
Flair Dr EB			61.1
Flair Dr WB			59.7
Fletcher Ave NB			34.2
Fletcher Ave SB			32.6
Garvey Ave EB			42
Garvey Ave WB			41.9
Gilman Rd NB			0
Gilman Rd SB			0
Glendon Way EB			28.4
Glendon Way WB			26.8
I-10 EB			70.5
I-10 EB Ramp			20.2
I-10 EB Ramp 2			22.6
I-10 WB			68.5
I-10 WB Ramp			38.2
Las Tunas Dr EB			25.1
Las Tunas Dr WB			25
Loftus Dr EB			41.9
Loftus Dr WB			43.9
Lower Azusa Rd EB			35.5
Lower Azusa Rd WB			35.5
Merced Ave NB			14.7
Merced Ave NB			31.5
Merced Ave SB			32.8
Olive St EB			17.5
Olive St WB			17.1
Olney St WB			30.9
Peck Rd NB			32.7
Peck Rd SB			32.7
Ramona Blvd EB			31.6

Ramona Blvd WB			31.3
Rio Hondo Ave NB			26
Rio Hondo Ave SB			22.3
Roseglen St NB			0
Roseglen St NB1			0
Roseglen St SB			0
Rosemead Blvd NB			43.6
Rosemead Blvd SB			43.1
Rush St EB			29
Rush St WB			24.1
San Gabriel Blvd NB			28.7
San Gabriel Blvd SB			29.3
Santa Anita Ave NB			39
Santa Anita Ave SB			38.8
Telstar Ave EB			55.8
Telstar Ave WB			57
Temple City Blvd NB			48.4
Temple City Blvd SB			49.6
Tyler Ave NB			33.1
Tyler Ave SB			34
Valley Blvd EB			43.2
Valley Blvd WB			43.4
Valley Mall NB			21.6
Valley Mall SB			19.3
Walnut Grove NB			32.2
Walnut Grove SB			31.9
Whitmore St			33
SW corner of Temple City and Lower Azusa	GF	64.1	
Aerojet Ave NB			20.5
Aerojet Ave SB			20.3
Baldwin Ave NB			44
Baldwin Ave SB			43
Chico Ave SB			17.1
Durfee Ave NB			0
Durfee Ave NB (South)			0
Durfee Ave SB (South)			0
Flair Dr EB			29.9
Flair Dr WB			29.5
Fletcher Ave NB			13.6
Fletcher Ave SB			12.1
Garvey Ave EB			33.8
Garvey Ave WB			33.8
Gilman Rd NB			0

Gilman Rd SB	0
Glendon Way EB	24.8
Glendon Way WB	23.2
I-10 EB	45.8
I-10 EB Ramp	19.2
I-10 EB Ramp 2	21.7
I-10 WB	45.1
I-10 WB Ramp	14.4
Las Tunas Dr EB	31.9
Las Tunas Dr WB	31.7
Loftus Dr EB	26.9
Loftus Dr WB	29.5
Lower Azusa Rd EB	57.2
Lower Azusa Rd WB	57
Merced Ave NB	5.4
Merced Ave NB	21.4
Merced Ave SB	22.6
Olive St EB	25.6
Olive St WB	25.2
Olney St WB	8.9
Peck Rd NB	31.4
Peck Rd SB	31.2
Ramona Blvd EB	27.4
Ramona Blvd WB	28
Rio Hondo Ave NB	21.5
Rio Hondo Ave SB	18.1
Roseglen St NB	0
Roseglen St NB1	0
Roseglen St SB	0
Rosemead Blvd NB	42
Rosemead Blvd SB	41.7
Rush St EB	21.6
Rush St WB	16.6
San Gabriel Blvd NB	29
San Gabriel Blvd SB	29.6
Santa Anita Ave NB	35.4
Santa Anita Ave SB	35.3
Telstar Ave EB	31.3
Telstar Ave WB	27.3
Temple City Blvd NB	59.1
Temple City Blvd SB	57.2
Tyler Ave NB	31.4
Tyler Ave SB	33.3

Valley Blvd EB			42.4
Valley Blvd WB			43.1
Valley Mall NB			18.7
Valley Mall SB			16.4
Walnut Grove NB			32.3
Walnut Grove SB			32.1
Whitmore St			23.5
SW of Peck at I-10	GF	70.9	
Aerojet Ave NB			12.7
Aerojet Ave SB			12.5
Baldwin Ave NB			34
Baldwin Ave SB			32.8
Chico Ave SB			18
Durfee Ave NB			16.1
Durfee Ave NB (South)			0
Durfee Ave SB (South)			19.9
Flair Dr EB			25.1
Flair Dr WB			25.7
Fletcher Ave NB			10.6
Fletcher Ave SB			9.2
Garvey Ave EB			46.1
Garvey Ave WB			46.7
Gilman Rd NB			14.7
Gilman Rd SB			19.4
Glendon Way EB			0
Glendon Way WB			0
I-10 EB			68
I-10 EB Ramp			4.5
I-10 EB Ramp 2			7.1
I-10 WB			66.1
I-10 WB Ramp			10
Las Tunas Dr EB			0
Las Tunas Dr WB			0
Loftus Dr EB			22.2
Loftus Dr WB			25
Lower Azusa Rd EB			34.5
Lower Azusa Rd WB			34.4
Merced Ave NB			6.3
Merced Ave NB			25.1
Merced Ave SB			26.3
Olive St EB			12
Olive St WB			11.6
Olney St WB			4.4

Peck Rd NB			57.7
Peck Rd SB			59.7
Ramona Blvd EB			41.9
Ramona Blvd WB			42.3
Rio Hondo Ave NB			15
Rio Hondo Ave SB			11.2
Roseglen St NB			14.9
Roseglen St NB1			11.5
Roseglen St SB			10.3
Rosemead Blvd NB			34.1
Rosemead Blvd SB			33.9
Rush St EB			24.8
Rush St WB			19.8
San Gabriel Blvd NB			0
San Gabriel Blvd SB			0
Santa Anita Ave NB			41.5
Santa Anita Ave SB			41.5
Telstar Ave EB			27.9
Telstar Ave WB			24.5
Temple City Blvd NB			31.7
Temple City Blvd SB			30.3
Tyler Ave NB			44.7
Tyler Ave SB			43.2
Valley Blvd EB			50.2
Valley Blvd WB			49.1
Valley Mall NB			28.4
Valley Mall SB			26.2
Walnut Grove NB			0
Walnut Grove SB			0
Whitmore St			21.3
SW of Santa Anita at I-10	GF	69.7	
Aerojet Ave NB			16.9
Aerojet Ave SB			16.7
Baldwin Ave NB			38.6
Baldwin Ave SB			37.5
Chico Ave SB			22.8
Durfee Ave NB			0
Durfee Ave NB (South)			0
Durfee Ave SB (South)			15.9
Flair Dr EB			30.8
Flair Dr WB			31
Fletcher Ave NB			15.7
Fletcher Ave SB			14.2

Garvey Ave EB	45.6
Garvey Ave WB	46
Gilman Rd NB	11.1
Gilman Rd SB	15.8
Glendon Way EB	18.7
Glendon Way WB	17.8
I-10 EB	66.3
I-10 EB Ramp	4.5
I-10 EB Ramp 2	7.9
I-10 WB	64.9
I-10 WB Ramp	15.3
Las Tunas Dr EB	0
Las Tunas Dr WB	0
Loftus Dr EB	28.4
Loftus Dr WB	31.2
Lower Azusa Rd EB	34.6
Lower Azusa Rd WB	34.5
Merced Ave NB	11.2
Merced Ave NB	33.1
Merced Ave SB	34.2
Olive St EB	16.1
Olive St WB	15.7
Olney St WB	9.6
Peck Rd NB	38.9
Peck Rd SB	39.1
Ramona Blvd EB	39.4
Ramona Blvd WB	39.8
Rio Hondo Ave NB	19.7
Rio Hondo Ave SB	15.9
Roseglen St NB	0
Roseglen St NB1	0
Roseglen St SB	0
Rosemead Blvd NB	38.7
Rosemead Blvd SB	38.5
Rush St EB	28
Rush St WB	23.1
San Gabriel Blvd NB	0
San Gabriel Blvd SB	0
Santa Anita Ave NB	58.4
Santa Anita Ave SB	59.9
Telstar Ave EB	32.3
Telstar Ave WB	29.3
Temple City Blvd NB	35.5

Temple City Blvd SB	34.3
Tyler Ave NB	41.6
Tyler Ave SB	40.8
Valley Blvd EB	43.6
Valley Blvd WB	42.9
Valley Mall NB	28.1
Valley Mall SB	25.9
Walnut Grove NB	28.9
Walnut Grove SB	28.5
Whitmore St	25.6

05360 Flair Spectrum Specific Plan
Year 2035 Plus Project Buildout
Road Emission Table

Stationing km	ADT Veh/24h	Traffic values Vehicles type	Vehicle name	day Veh/h	night Veh/h	Speed km/h	Control device	Constr. Speed km/h	Affect. veh. %	Road surface	Gradient Min / Max %
San Gabriel Blvd SB	Traffic direction:	In entry direction									
2+808	*43485*	*Total*	-	*2899*	-	-	*Traffic light*	*0*	-	*Average (of DGAC and PCC)*	*0*
2+808	43485	Automobiles	-	1692	-	56	Traffic light	0	-	Average (of DGAC and PCC)	0
2+808	43485	Medium trucks	-	1033	-	56	Traffic light	0	-	Average (of DGAC and PCC)	0
2+808	43485	Heavy trucks	-	136	-	56	Traffic light	0	-	Average (of DGAC and PCC)	0
2+808	43485	Buses	-	20	-	56	Traffic light	0	-	Average (of DGAC and PCC)	0
2+808	43485	Motorcycles	-	18	-	56	Traffic light	0	-	Average (of DGAC and PCC)	0
2+808	43485	Auxiliary Vehicle	-	-	-	56	Traffic light	0	-	Average (of DGAC and PCC)	0
3+411	*43485*	*Total*	-	*2899*	-	-	*Traffic light*	*0*	-	*Average (of DGAC and PCC)*	*0*
3+411	43485	Automobiles	-	1692	-	56	Traffic light	0	-	Average (of DGAC and PCC)	0
3+411	43485	Medium trucks	-	1033	-	56	Traffic light	0	-	Average (of DGAC and PCC)	0
3+411	43485	Heavy trucks	-	136	-	56	Traffic light	0	-	Average (of DGAC and PCC)	0
3+411	43485	Buses	-	20	-	56	Traffic light	0	-	Average (of DGAC and PCC)	0
3+411	43485	Motorcycles	-	18	-	56	Traffic light	0	-	Average (of DGAC and PCC)	0
3+411	43485	Auxiliary Vehicle	-	-	-	56	Traffic light	0	-	Average (of DGAC and PCC)	0
5+357	-						-	-	-	-	-
0+000	*43485*	*Total*	-	*2899*	-	-	*Traffic light*	*0*	-	*Average (of DGAC and PCC)*	*0*
0+000	43485	Automobiles	-	1692	-	56	Traffic light	0	-	Average (of DGAC and PCC)	0
0+000	43485	Medium trucks	-	1033	-	56	Traffic light	0	-	Average (of DGAC and PCC)	0
0+000	43485	Heavy trucks	-	136	-	56	Traffic light	0	-	Average (of DGAC and PCC)	0
0+000	43485	Buses	-	20	-	56	Traffic light	0	-	Average (of DGAC and PCC)	0
0+000	43485	Motorcycles	-	18	-	56	Traffic light	0	-	Average (of DGAC and PCC)	0
0+000	43485	Auxiliary Vehicle	-	-	-	56	Traffic light	0	-	Average (of DGAC and PCC)	0
San Gabriel Blvd NB	Traffic direction:	In entry direction									
2+808	*38100*	*Total*	-	*2540*	-	-	*Traffic light*	*0*	-	*Average (of DGAC and PCC)*	*0*
2+808	38100	Automobiles	-	1483	-	56	Traffic light	0	-	Average (of DGAC and PCC)	0
2+808	38100	Medium trucks	-	905	-	56	Traffic light	0	-	Average (of DGAC and PCC)	0
2+808	38100	Heavy trucks	-	119	-	56	Traffic light	0	-	Average (of DGAC and PCC)	0
2+808	38100	Buses	-	17	-	56	Traffic light	0	-	Average (of DGAC and PCC)	0
2+808	38100	Motorcycles	-	16	-	56	Traffic light	0	-	Average (of DGAC and PCC)	0
2+808	38100	Auxiliary Vehicle	-	-	-	56	Traffic light	0	-	Average (of DGAC and PCC)	0
4+792	*38100*	*Total*	-	*2540*	-	-	*Traffic light*	*0*	-	*Average (of DGAC and PCC)*	*0*
4+792	38100	Automobiles	-	1483	-	56	Traffic light	0	-	Average (of DGAC and PCC)	0
4+792	38100	Medium trucks	-	905	-	56	Traffic light	0	-	Average (of DGAC and PCC)	0
4+792	38100	Heavy trucks	-	119	-	56	Traffic light	0	-	Average (of DGAC and PCC)	0
4+792	38100	Buses	-	17	-	56	Traffic light	0	-	Average (of DGAC and PCC)	0
4+792	38100	Motorcycles	-	16	-	56	Traffic light	0	-	Average (of DGAC and PCC)	0
4+792	38100	Auxiliary Vehicle	-	-	-	56	Traffic light	0	-	Average (of DGAC and PCC)	0
5+314	-						-	-	-	-	-
0+000	*38100*	*Total*	-	*2540*	-	-	*Traffic light*	*0*	-	*Average (of DGAC and PCC)*	*0*
0+000	38100	Automobiles	-	1483	-	56	Traffic light	0	-	Average (of DGAC and PCC)	0
0+000	38100	Medium trucks	-	905	-	56	Traffic light	0	-	Average (of DGAC and PCC)	0
0+000	38100	Heavy trucks	-	119	-	56	Traffic light	0	-	Average (of DGAC and PCC)	0
0+000	38100	Buses	-	17	-	56	Traffic light	0	-	Average (of DGAC and PCC)	0
0+000	38100	Motorcycles	-	16	-	56	Traffic light	0	-	Average (of DGAC and PCC)	0
0+000	38100	Auxiliary Vehicle	-	-	-	56	Traffic light	0	-	Average (of DGAC and PCC)	0
Walnut Grove SB	Traffic direction:	In entry direction									
2+808	32055	Total	-	2137	-	-	Traffic light	0	-	Average (of DGAC and PCC)	0
2+808	32055	Automobiles	-	1247	-	64	Traffic light	0	-	Average (of DGAC and PCC)	0
2+808	32055	Medium trucks	-	761	-	64	Traffic light	0	-	Average (of DGAC and PCC)	0
2+808	32055	Heavy trucks	-	100	-	64	Traffic light	0	-	Average (of DGAC and PCC)	0

2+808	32055	Buses	-	15	-	64	Traffic light	0	-	Average (of DGAC and PCC)	0
2+808	32055	Motorcycles	-	14	-	64	Traffic light	0	-	Average (of DGAC and PCC)	0
2+808	32055	Auxiliary Vehicle	-	-	-	64	Traffic light	0	-	Average (of DGAC and PCC)	0
3+511	*32055*	*Total*	-	*2137*	-	-	*Traffic light*	*0*	-	*Average (of DGAC and PCC)*	*0*
3+511	32055	Automobiles	-	1247	-	64	Traffic light	0	-	Average (of DGAC and PCC)	0
3+511	32055	Medium trucks	-	761	-	64	Traffic light	0	-	Average (of DGAC and PCC)	0
3+511	32055	Heavy trucks	-	100	-	64	Traffic light	0	-	Average (of DGAC and PCC)	0
3+511	32055	Buses	-	15	-	64	Traffic light	0	-	Average (of DGAC and PCC)	0
3+511	32055	Motorcycles	-	14	-	64	Traffic light	0	-	Average (of DGAC and PCC)	0
3+511	32055	Auxiliary Vehicle	-	-	-	64	Traffic light	0	-	Average (of DGAC and PCC)	0
5+905	*31050*	*Total*	-	*2070*	-	-	*Traffic light*	*0*	-	*Average (of DGAC and PCC)*	*0*
5+905	31050	Automobiles	-	1208	-	64	Traffic light	0	-	Average (of DGAC and PCC)	0
5+905	31050	Medium trucks	-	738	-	64	Traffic light	0	-	Average (of DGAC and PCC)	0
5+905	31050	Heavy trucks	-	97	-	64	Traffic light	0	-	Average (of DGAC and PCC)	0
5+905	31050	Buses	-	14	-	64	Traffic light	0	-	Average (of DGAC and PCC)	0
5+905	31050	Motorcycles	-	13	-	64	Traffic light	0	-	Average (of DGAC and PCC)	0
5+905	31050	Auxiliary Vehicle	-	-	-	64	Traffic light	0	-	Average (of DGAC and PCC)	0
6+606	-						-	-	-	-	-
0+000	*31050*	*Total*	-	*2070*	-	-	*Traffic light*	*0*	-	*Average (of DGAC and PCC)*	*0*
0+000	31050	Automobiles	-	1208	-	64	Traffic light	0	-	Average (of DGAC and PCC)	0
0+000	31050	Medium trucks	-	738	-	64	Traffic light	0	-	Average (of DGAC and PCC)	0
0+000	31050	Heavy trucks	-	97	-	64	Traffic light	0	-	Average (of DGAC and PCC)	0
0+000	31050	Buses	-	14	-	64	Traffic light	0	-	Average (of DGAC and PCC)	0
0+000	31050	Motorcycles	-	13	-	64	Traffic light	0	-	Average (of DGAC and PCC)	0
0+000	31050	Auxiliary Vehicle	-	-	-	64	Traffic light	0	-	Average (of DGAC and PCC)	0
Walnut Grove NB	Traffic direction:	In entry direction									
2+808	*35565*	*Total*	-	*2371*	-	-	*Traffic light*	*0*	-	*Average (of DGAC and PCC)*	*0*
2+808	35565	Automobiles	-	1384	-	64	Traffic light	0	-	Average (of DGAC and PCC)	0
2+808	35565	Medium trucks	-	845	-	64	Traffic light	0	-	Average (of DGAC and PCC)	0
2+808	35565	Heavy trucks	-	111	-	64	Traffic light	0	-	Average (of DGAC and PCC)	0
2+808	35565	Buses	-	16	-	64	Traffic light	0	-	Average (of DGAC and PCC)	0
2+808	35565	Motorcycles	-	15	-	64	Traffic light	0	-	Average (of DGAC and PCC)	0
2+808	35565	Auxiliary Vehicle	-	-	-	64	Traffic light	0	-	Average (of DGAC and PCC)	0
3+507	*35565*	*Total*	-	*2371*	-	-	*Traffic light*	*0*	-	*Average (of DGAC and PCC)*	*0*
3+507	35565	Automobiles	-	1384	-	64	Traffic light	0	-	Average (of DGAC and PCC)	0
3+507	35565	Medium trucks	-	845	-	64	Traffic light	0	-	Average (of DGAC and PCC)	0
3+507	35565	Heavy trucks	-	111	-	64	Traffic light	0	-	Average (of DGAC and PCC)	0
3+507	35565	Buses	-	16	-	64	Traffic light	0	-	Average (of DGAC and PCC)	0
3+507	35565	Motorcycles	-	15	-	64	Traffic light	0	-	Average (of DGAC and PCC)	0
3+507	35565	Auxiliary Vehicle	-	-	-	64	Traffic light	0	-	Average (of DGAC and PCC)	0
5+919	*27765*	*Total*	-	*1851*	-	-	*Traffic light*	*0*	-	*Average (of DGAC and PCC)*	*0*
5+919	27765	Automobiles	-	1079	-	64	Traffic light	0	-	Average (of DGAC and PCC)	0
5+919	27765	Medium trucks	-	659	-	64	Traffic light	0	-	Average (of DGAC and PCC)	0
5+919	27765	Heavy trucks	-	87	-	64	Traffic light	0	-	Average (of DGAC and PCC)	0
5+919	27765	Buses	-	14	-	64	Traffic light	0	-	Average (of DGAC and PCC)	0
5+919	27765	Motorcycles	-	12	-	64	Traffic light	0	-	Average (of DGAC and PCC)	0
5+919	27765	Auxiliary Vehicle	-	-	-	64	Traffic light	0	-	Average (of DGAC and PCC)	0
6+589	-						-	-	-	-	-
0+000	*27750*	*Total*	-	*1850*	-	-	*Traffic light*	*0*	-	*Average (of DGAC and PCC)*	*0*
0+000	27750	Automobiles	-	1079	-	64	Traffic light	0	-	Average (of DGAC and PCC)	0
0+000	27750	Medium trucks	-	659	-	64	Traffic light	0	-	Average (of DGAC and PCC)	0
0+000	27750	Heavy trucks	-	87	-	64	Traffic light	0	-	Average (of DGAC and PCC)	0
0+000	27750	Buses	-	13	-	64	Traffic light	0	-	Average (of DGAC and PCC)	0
0+000	27750	Motorcycles	-	12	-	64	Traffic light	0	-	Average (of DGAC and PCC)	0
0+000	27750	Auxiliary Vehicle	-	-	-	64	Traffic light	0	-	Average (of DGAC and PCC)	0
Valley Blvd WB	Traffic direction:	In entry direction									
2+808	*32340*	*Total*	-	*2156*	-	-	*none*	-	-	*Average (of DGAC and PCC)*	*0*
2+808	32340	Automobiles	-	1258	-	56	none	-	-	Average (of DGAC and PCC)	0

2+808	32340	Medium trucks	-		768	-		56	none	-	-	Average (of DGAC and PCC)	0
2+808	32340	Heavy trucks	-		101	-		56	none	-	-	Average (of DGAC and PCC)	0
2+808	32340	Buses	-		15	-		56	none	-	-	Average (of DGAC and PCC)	0
2+808	32340	Motorcycles	-		14	-		56	none	-	-	Average (of DGAC and PCC)	0
2+808	32340	Auxiliary Vehicle	-	-	-			56	none	-	-	Average (of DGAC and PCC)	0
3+368	*32340*	*Total*	-		*2156*	-	-		*Traffic light*	*0*	-	*Average (of DGAC and PCC)*	*0*
3+368	32340	Automobiles	-		1258	-		56	Traffic light	0	-	Average (of DGAC and PCC)	0
3+368	32340	Medium trucks	-		768	-		56	Traffic light	0	-	Average (of DGAC and PCC)	0
3+368	32340	Heavy trucks	-		101	-		56	Traffic light	0	-	Average (of DGAC and PCC)	0
3+368	32340	Buses	-		15	-		56	Traffic light	0	-	Average (of DGAC and PCC)	0
3+368	32340	Motorcycles	-		14	-		56	Traffic light	0	-	Average (of DGAC and PCC)	0
3+368	32340	Auxiliary Vehicle	-	-	-			56	Traffic light	0	-	Average (of DGAC and PCC)	0
4+654	*37125*	*Total*	-		*2475*	-	-		*Traffic light*	*0*	-	*Average (of DGAC and PCC)*	*0*
4+654	37125	Automobiles	-		1444	-		56	Traffic light	0	-	Average (of DGAC and PCC)	0
4+654	37125	Medium trucks	-		882	-		56	Traffic light	0	-	Average (of DGAC and PCC)	0
4+654	37125	Heavy trucks	-		116	-		56	Traffic light	0	-	Average (of DGAC and PCC)	0
4+654	37125	Buses	-		17	-		56	Traffic light	0	-	Average (of DGAC and PCC)	0
4+654	37125	Motorcycles	-		16	-		56	Traffic light	0	-	Average (of DGAC and PCC)	0
4+654	37125	Auxiliary Vehicle	-	-	-			56	Traffic light	0	-	Average (of DGAC and PCC)	0
5+206	*37125*	*Total*	-		*2475*	-	-		*none*	-	-	*Average (of DGAC and PCC)*	*0*
5+206	37125	Automobiles	-		1444	-		56	none	-	-	Average (of DGAC and PCC)	0
5+206	37125	Medium trucks	-		882	-		56	none	-	-	Average (of DGAC and PCC)	0
5+206	37125	Heavy trucks	-		116	-		56	none	-	-	Average (of DGAC and PCC)	0
5+206	37125	Buses	-		17	-		56	none	-	-	Average (of DGAC and PCC)	0
5+206	37125	Motorcycles	-		16	-		56	none	-	-	Average (of DGAC and PCC)	0
5+206	37125	Auxiliary Vehicle	-	-	-			56	none	-	-	Average (of DGAC and PCC)	0
5+358	*30600*	*Total*	-		*2040*	-	-		*Traffic light*	*0*	-	*Average (of DGAC and PCC)*	*0*
5+358	30600	Automobiles	-		1190	-		56	Traffic light	0	-	Average (of DGAC and PCC)	0
5+358	30600	Medium trucks	-		727	-		56	Traffic light	0	-	Average (of DGAC and PCC)	0
5+358	30600	Heavy trucks	-		96	-		56	Traffic light	0	-	Average (of DGAC and PCC)	0
5+358	30600	Buses	-		14	-		56	Traffic light	0	-	Average (of DGAC and PCC)	0
5+358	30600	Motorcycles	-		13	-		56	Traffic light	0	-	Average (of DGAC and PCC)	0
5+358	30600	Auxiliary Vehicle	-	-	-			56	Traffic light	0	-	Average (of DGAC and PCC)	0
5+436	*30600*	*Total*	-		*2040*	-	-		*none*	-	-	*Average (of DGAC and PCC)*	*0*
5+436	30600	Automobiles	-		1190	-		56	none	-	-	Average (of DGAC and PCC)	0
5+436	30600	Medium trucks	-		727	-		56	none	-	-	Average (of DGAC and PCC)	0
5+436	30600	Heavy trucks	-		96	-		56	none	-	-	Average (of DGAC and PCC)	0
5+436	30600	Buses	-		14	-		56	none	-	-	Average (of DGAC and PCC)	0
5+436	30600	Motorcycles	-		13	-		56	none	-	-	Average (of DGAC and PCC)	0
5+436	30600	Auxiliary Vehicle	-	-	-			56	none	-	-	Average (of DGAC and PCC)	0
5+512	*30600*	*Total*	-		*2040*	-	-		*none*	-	-	*Average (of DGAC and PCC)*	*0*
5+512	30600	Automobiles	-		1190	-		56	none	-	-	Average (of DGAC and PCC)	0
5+512	30600	Medium trucks	-		727	-		56	none	-	-	Average (of DGAC and PCC)	0
5+512	30600	Heavy trucks	-		96	-		56	none	-	-	Average (of DGAC and PCC)	0
5+512	30600	Buses	-		14	-		56	none	-	-	Average (of DGAC and PCC)	0
5+512	30600	Motorcycles	-		13	-		56	none	-	-	Average (of DGAC and PCC)	0
5+512	30600	Auxiliary Vehicle	-	-	-			56	none	-	-	Average (of DGAC and PCC)	0
5+651	*30600*	*Total*	-		*2040*	-	-		*none*	-	-	*Average (of DGAC and PCC)*	*0*
5+651	30600	Automobiles	-		1190	-		56	none	-	-	Average (of DGAC and PCC)	0
5+651	30600	Medium trucks	-		727	-		56	none	-	-	Average (of DGAC and PCC)	0
5+651	30600	Heavy trucks	-		96	-		56	none	-	-	Average (of DGAC and PCC)	0
5+651	30600	Buses	-		14	-		56	none	-	-	Average (of DGAC and PCC)	0
5+651	30600	Motorcycles	-		13	-		56	none	-	-	Average (of DGAC and PCC)	0
5+651	30600	Auxiliary Vehicle	-	-	-			56	none	-	-	Average (of DGAC and PCC)	0
5+812	*34575*	*Total*	-		*2305*	-	-		*Traffic light*	*0*	-	*Average (of DGAC and PCC)*	*0*
5+812	34575	Automobiles	-		1345	-		56	Traffic light	0	-	Average (of DGAC and PCC)	0
5+812	34575	Medium trucks	-		821	-		56	Traffic light	0	-	Average (of DGAC and PCC)	0
5+812	34575	Heavy trucks	-		108	-		56	Traffic light	0	-	Average (of DGAC and PCC)	0

5+812	34575	Buses	-		16	-		56	Traffic light	0	-	Average (of DGAC and PCC)	0
5+812	34575	Motorcycles	-		15	-		56	Traffic light	0	-	Average (of DGAC and PCC)	0
5+812	34575	Auxiliary Vehicle	-	-	-			56	Traffic light	0	-	Average (of DGAC and PCC)	0
6+392	*34575*	*Total*	-		*2305*	-	-		*none*	-	-	*Average (of DGAC and PCC)*	*0*
6+392	34575	Automobiles	-		1345	-		56	none	-	-	Average (of DGAC and PCC)	0
6+392	34575	Medium trucks	-		821	-		56	none	-	-	Average (of DGAC and PCC)	0
6+392	34575	Heavy trucks	-		108	-		56	none	-	-	Average (of DGAC and PCC)	0
6+392	34575	Buses	-		16	-		56	none	-	-	Average (of DGAC and PCC)	0
6+392	34575	Motorcycles	-		15	-		56	none	-	-	Average (of DGAC and PCC)	0
6+392	34575	Auxiliary Vehicle	-	-	-			56	none	-	-	Average (of DGAC and PCC)	0
6+509	*47025*	*Total*	-		*3135*	-	-		*Traffic light*	*0*	-	*Average (of DGAC and PCC)*	*0*
6+509	47025	Automobiles	-		1830	-		56	Traffic light	0	-	Average (of DGAC and PCC)	0
6+509	47025	Medium trucks	-		1117	-		56	Traffic light	0	-	Average (of DGAC and PCC)	0
6+509	47025	Heavy trucks	-		147	-		56	Traffic light	0	-	Average (of DGAC and PCC)	0
6+509	47025	Buses	-		21	-		56	Traffic light	0	-	Average (of DGAC and PCC)	0
6+509	47025	Motorcycles	-		20	-		56	Traffic light	0	-	Average (of DGAC and PCC)	0
6+509	47025	Auxiliary Vehicle	-	-	-			56	Traffic light	0	-	Average (of DGAC and PCC)	0
6+641	*47025*	*Total*	-		*3135*	-	-		*none*	-	-	*Average (of DGAC and PCC)*	*0*
6+641	47025	Automobiles	-		1830	-		56	none	-	-	Average (of DGAC and PCC)	0
6+641	47025	Medium trucks	-		1117	-		56	none	-	-	Average (of DGAC and PCC)	0
6+641	47025	Heavy trucks	-		147	-		56	none	-	-	Average (of DGAC and PCC)	0
6+641	47025	Buses	-		21	-		56	none	-	-	Average (of DGAC and PCC)	0
6+641	47025	Motorcycles	-		20	-		56	none	-	-	Average (of DGAC and PCC)	0
6+641	47025	Auxiliary Vehicle	-	-	-			56	none	-	-	Average (of DGAC and PCC)	0
8+001	*39075*	*Total*	-		*2605*	-	-		*Traffic light*	*0*	-	*Average (of DGAC and PCC)*	*0*
8+001	39075	Automobiles	-		1520	-		56	Traffic light	0	-	Average (of DGAC and PCC)	0
8+001	39075	Medium trucks	-		928	-		56	Traffic light	0	-	Average (of DGAC and PCC)	0
8+001	39075	Heavy trucks	-		122	-		56	Traffic light	0	-	Average (of DGAC and PCC)	0
8+001	39075	Buses	-		18	-		56	Traffic light	0	-	Average (of DGAC and PCC)	0
8+001	39075	Motorcycles	-		17	-		56	Traffic light	0	-	Average (of DGAC and PCC)	0
8+001	39075	Auxiliary Vehicle	-	-	-			56	Traffic light	0	-	Average (of DGAC and PCC)	0
8+681	*42240*	*Total*	-		*2816*	-	-		*Traffic light*	*0*	-	*Average (of DGAC and PCC)*	*0*
8+681	42240	Automobiles	-		1643	-		56	Traffic light	0	-	Average (of DGAC and PCC)	0
8+681	42240	Medium trucks	-		1004	-		56	Traffic light	0	-	Average (of DGAC and PCC)	0
8+681	42240	Heavy trucks	-		132	-		56	Traffic light	0	-	Average (of DGAC and PCC)	0
8+681	42240	Buses	-		19	-		56	Traffic light	0	-	Average (of DGAC and PCC)	0
8+681	42240	Motorcycles	-		18	-		56	Traffic light	0	-	Average (of DGAC and PCC)	0
8+681	42240	Auxiliary Vehicle	-	-	-			56	Traffic light	0	-	Average (of DGAC and PCC)	0
10+386	*37500*	*Total*	-		*2500*	-	-		*Traffic light*	*0*	-	*Average (of DGAC and PCC)*	*0*
10+386	37500	Automobiles	-		1459	-		56	Traffic light	0	-	Average (of DGAC and PCC)	0
10+386	37500	Medium trucks	-		891	-		56	Traffic light	0	-	Average (of DGAC and PCC)	0
10+386	37500	Heavy trucks	-		117	-		56	Traffic light	0	-	Average (of DGAC and PCC)	0
10+386	37500	Buses	-		17	-		56	Traffic light	0	-	Average (of DGAC and PCC)	0
10+386	37500	Motorcycles	-		16	-		56	Traffic light	0	-	Average (of DGAC and PCC)	0
10+386	37500	Auxiliary Vehicle	-	-	-			56	Traffic light	0	-	Average (of DGAC and PCC)	0
11+398	*44490*	*Total*	-		*2966*	-	-		*Traffic light*	*0*	-	*Average (of DGAC and PCC)*	*0*
11+398	44490	Automobiles	-		1731	-		56	Traffic light	0	-	Average (of DGAC and PCC)	0
11+398	44490	Medium trucks	-		1057	-		56	Traffic light	0	-	Average (of DGAC and PCC)	0
11+398	44490	Heavy trucks	-		139	-		56	Traffic light	0	-	Average (of DGAC and PCC)	0
11+398	44490	Buses	-		20	-		56	Traffic light	0	-	Average (of DGAC and PCC)	0
11+398	44490	Motorcycles	-		19	-		56	Traffic light	0	-	Average (of DGAC and PCC)	0
11+398	44490	Auxiliary Vehicle	-	-	-			56	Traffic light	0	-	Average (of DGAC and PCC)	0
12+369	*50550*	*Total*	-		*3370*	-	-		*Traffic light*	*0*	-	*Average (of DGAC and PCC)*	*0*
12+369	50550	Automobiles	-		1967	-		56	Traffic light	0	-	Average (of DGAC and PCC)	0
12+369	50550	Medium trucks	-		1201	-		56	Traffic light	0	-	Average (of DGAC and PCC)	0
12+369	50550	Heavy trucks	-		158	-		56	Traffic light	0	-	Average (of DGAC and PCC)	0
12+369	50550	Buses	-		23	-		56	Traffic light	0	-	Average (of DGAC and PCC)	0
12+369	50550	Motorcycles	-		21	-		56	Traffic light	0	-	Average (of DGAC and PCC)	0

12+369	50550	Auxiliary Vehicle	-	-	-	56	Traffic light	0	-	Average (of DGAC and PCC)	0
12+792	-						-	-	-	-	-
0+000	*50550*	*Total*	-	*3370*	-	-	*none*	-	-	*Average (of DGAC and PCC)*	*0*
0+000	50550	Automobiles	-	1967	-	56	none	-	-	Average (of DGAC and PCC)	0
0+000	50550	Medium trucks	-	1201	-	56	none	-	-	Average (of DGAC and PCC)	0
0+000	50550	Heavy trucks	-	158	-	56	none	-	-	Average (of DGAC and PCC)	0
0+000	50550	Buses	-	23	-	56	none	-	-	Average (of DGAC and PCC)	0
0+000	50550	Motorcycles	-	21	-	56	none	-	-	Average (of DGAC and PCC)	0
0+000	50550	Auxiliary Vehicle	-	-	-	56	none	-	-	Average (of DGAC and PCC)	0
Rosemead Blvd SB	Traffic direction:	In entry direction									
2+808	*52005*	*Total*	-	*3467*	-	-	*none*	-	-	*Average (of DGAC and PCC)*	*0*
2+808	52005	Automobiles	-	2024	-	64	none	-	-	Average (of DGAC and PCC)	0
2+808	52005	Medium trucks	-	1236	-	64	none	-	-	Average (of DGAC and PCC)	0
2+808	52005	Heavy trucks	-	162	-	64	none	-	-	Average (of DGAC and PCC)	0
2+808	52005	Buses	-	23	-	64	none	-	-	Average (of DGAC and PCC)	0
2+808	52005	Motorcycles	-	22	-	64	none	-	-	Average (of DGAC and PCC)	0
2+808	52005	Auxiliary Vehicle	-	-	-	64	none	-	-	Average (of DGAC and PCC)	0
3+287	*52005*	*Total*	-	*3467*	-	-	*Traffic light*	*0*	-	*Average (of DGAC and PCC)*	*0*
3+287	52005	Automobiles	-	2024	-	64	Traffic light	0	-	Average (of DGAC and PCC)	0
3+287	52005	Medium trucks	-	1236	-	64	Traffic light	0	-	Average (of DGAC and PCC)	0
3+287	52005	Heavy trucks	-	162	-	64	Traffic light	0	-	Average (of DGAC and PCC)	0
3+287	52005	Buses	-	23	-	64	Traffic light	0	-	Average (of DGAC and PCC)	0
3+287	52005	Motorcycles	-	22	-	64	Traffic light	0	-	Average (of DGAC and PCC)	0
3+287	52005	Auxiliary Vehicle	-	-	-	64	Traffic light	0	-	Average (of DGAC and PCC)	0
5+711	*60810*	*Total*	-	*4054*	-	-	*Traffic light*	*0*	-	*Average (of DGAC and PCC)*	*0*
5+711	60810	Automobiles	-	2367	-	64	Traffic light	0	-	Average (of DGAC and PCC)	0
5+711	60810	Medium trucks	-	1445	-	64	Traffic light	0	-	Average (of DGAC and PCC)	0
5+711	60810	Heavy trucks	-	190	-	64	Traffic light	0	-	Average (of DGAC and PCC)	0
5+711	60810	Buses	-	27	-	64	Traffic light	0	-	Average (of DGAC and PCC)	0
5+711	60810	Motorcycles	-	25	-	64	Traffic light	0	-	Average (of DGAC and PCC)	0
5+711	60810	Auxiliary Vehicle	-	-	-	64	Traffic light	0	-	Average (of DGAC and PCC)	0
6+547	*57900*	*Total*	-	*3860*	-	-	*Traffic light*	*0*	-	*Average (of DGAC and PCC)*	*0*
6+547	57900	Automobiles	-	2254	-	64	Traffic light	0	-	Average (of DGAC and PCC)	0
6+547	57900	Medium trucks	-	1376	-	64	Traffic light	0	-	Average (of DGAC and PCC)	0
6+547	57900	Heavy trucks	-	180	-	64	Traffic light	0	-	Average (of DGAC and PCC)	0
6+547	57900	Buses	-	26	-	64	Traffic light	0	-	Average (of DGAC and PCC)	0
6+547	57900	Motorcycles	-	24	-	64	Traffic light	0	-	Average (of DGAC and PCC)	0
6+547	57900	Auxiliary Vehicle	-	-	-	64	Traffic light	0	-	Average (of DGAC and PCC)	0
7+477	*79980*	*Total*	-	*5332*	-	-	*Traffic light*	*0*	-	*Average (of DGAC and PCC)*	*0*
7+477	79980	Automobiles	-	3113	-	64	Traffic light	0	-	Average (of DGAC and PCC)	0
7+477	79980	Medium trucks	-	1901	-	64	Traffic light	0	-	Average (of DGAC and PCC)	0
7+477	79980	Heavy trucks	-	249	-	64	Traffic light	0	-	Average (of DGAC and PCC)	0
7+477	79980	Buses	-	36	-	64	Traffic light	0	-	Average (of DGAC and PCC)	0
7+477	79980	Motorcycles	-	33	-	64	Traffic light	0	-	Average (of DGAC and PCC)	0
7+477	79980	Auxiliary Vehicle	-	-	-	64	Traffic light	0	-	Average (of DGAC and PCC)	0
7+811	*79980*	*Total*	-	*5332*	-	-	*Traffic light*	*0*	-	*Average (of DGAC and PCC)*	*0*
7+811	79980	Automobiles	-	3113	-	64	Traffic light	0	-	Average (of DGAC and PCC)	0
7+811	79980	Medium trucks	-	1901	-	64	Traffic light	0	-	Average (of DGAC and PCC)	0
7+811	79980	Heavy trucks	-	249	-	64	Traffic light	0	-	Average (of DGAC and PCC)	0
7+811	79980	Buses	-	36	-	64	Traffic light	0	-	Average (of DGAC and PCC)	0
7+811	79980	Motorcycles	-	33	-	64	Traffic light	0	-	Average (of DGAC and PCC)	0
7+811	79980	Auxiliary Vehicle	-	-	-	64	Traffic light	0	-	Average (of DGAC and PCC)	0
7+919	*79980*	*Total*	-	*5332*	-	-	*Traffic light*	*0*	-	*Average (of DGAC and PCC)*	*0*
7+919	79980	Automobiles	-	3113	-	72	Traffic light	0	-	Average (of DGAC and PCC)	0
7+919	79980	Medium trucks	-	1901	-	72	Traffic light	0	-	Average (of DGAC and PCC)	0
7+919	79980	Heavy trucks	-	249	-	72	Traffic light	0	-	Average (of DGAC and PCC)	0
7+919	79980	Buses	-	36	-	72	Traffic light	0	-	Average (of DGAC and PCC)	0
7+919	79980	Motorcycles	-	33	-	72	Traffic light	0	-	Average (of DGAC and PCC)	0

7+919	79980	Auxiliary Vehicle	-	-	-	72	Traffic light	0	-	Average (of DGAC and PCC)	0
8+050	*86835*	*Total*	-	*5789*	-	-	*none*	-	-	*Average (of DGAC and PCC)*	*0*
8+050	86835	Automobiles	-	3380	-	72	none	-	-	Average (of DGAC and PCC)	0
8+050	86835	Medium trucks	-	2064	-	72	none	-	-	Average (of DGAC and PCC)	0
8+050	86835	Heavy trucks	-	270	-	72	none	-	-	Average (of DGAC and PCC)	0
8+050	86835	Buses	-	39	-	72	none	-	-	Average (of DGAC and PCC)	0
8+050	86835	Motorcycles	-	36	-	72	none	-	-	Average (of DGAC and PCC)	0
8+050	86835	Auxiliary Vehicle	-	-	-	72	none	-	-	Average (of DGAC and PCC)	0
8+350	*80985*	*Total*	-	*5399*	-	-	*Traffic light*	*0*	-	*Average (of DGAC and PCC)*	*0*
8+350	80985	Automobiles	-	3152	-	72	Traffic light	0	-	Average (of DGAC and PCC)	0
8+350	80985	Medium trucks	-	1925	-	72	Traffic light	0	-	Average (of DGAC and PCC)	0
8+350	80985	Heavy trucks	-	252	-	72	Traffic light	0	-	Average (of DGAC and PCC)	0
8+350	80985	Buses	-	36	-	72	Traffic light	0	-	Average (of DGAC and PCC)	0
8+350	80985	Motorcycles	-	34	-	72	Traffic light	0	-	Average (of DGAC and PCC)	0
8+350	80985	Auxiliary Vehicle	-	-	-	72	Traffic light	0	-	Average (of DGAC and PCC)	0
8+819	*77265*	*Total*	-	*5151*	-	-	*Traffic light*	*0*	-	*Average (of DGAC and PCC)*	*0*
8+819	77265	Automobiles	-	3008	-	72	Traffic light	0	-	Average (of DGAC and PCC)	0
8+819	77265	Medium trucks	-	1836	-	72	Traffic light	0	-	Average (of DGAC and PCC)	0
8+819	77265	Heavy trucks	-	241	-	72	Traffic light	0	-	Average (of DGAC and PCC)	0
8+819	77265	Buses	-	34	-	72	Traffic light	0	-	Average (of DGAC and PCC)	0
8+819	77265	Motorcycles	-	32	-	72	Traffic light	0	-	Average (of DGAC and PCC)	0
8+819	77265	Auxiliary Vehicle	-	-	-	72	Traffic light	0	-	Average (of DGAC and PCC)	0
9+167	*77265*	*Total*	-	*5151*	-	-	*Traffic light*	*0*	-	*Average (of DGAC and PCC)*	*0*
9+167	77265	Automobiles	-	3008	-	72	Traffic light	0	-	Average (of DGAC and PCC)	0
9+167	77265	Medium trucks	-	1836	-	72	Traffic light	0	-	Average (of DGAC and PCC)	0
9+167	77265	Heavy trucks	-	241	-	72	Traffic light	0	-	Average (of DGAC and PCC)	0
9+167	77265	Buses	-	34	-	72	Traffic light	0	-	Average (of DGAC and PCC)	0
9+167	77265	Motorcycles	-	32	-	72	Traffic light	0	-	Average (of DGAC and PCC)	0
9+167	77265	Auxiliary Vehicle	-	-	-	72	Traffic light	0	-	Average (of DGAC and PCC)	0
9+309	*65775*	*Total*	-	*4385*	-	-	*Traffic light*	*0*	-	*Average (of DGAC and PCC)*	*0*
9+309	65775	Automobiles	-	2560	-	64	Traffic light	0	-	Average (of DGAC and PCC)	0
9+309	65775	Medium trucks	-	1563	-	64	Traffic light	0	-	Average (of DGAC and PCC)	0
9+309	65775	Heavy trucks	-	205	-	64	Traffic light	0	-	Average (of DGAC and PCC)	0
9+309	65775	Buses	-	29	-	64	Traffic light	0	-	Average (of DGAC and PCC)	0
9+309	65775	Motorcycles	-	28	-	64	Traffic light	0	-	Average (of DGAC and PCC)	0
9+309	65775	Auxiliary Vehicle	-	-	-	64	Traffic light	0	-	Average (of DGAC and PCC)	0
9+623	*65775*	*Total*	-	*4385*	-	-	*Traffic light*	*0*	-	*Average (of DGAC and PCC)*	*0*
9+623	65775	Automobiles	-	2560	-	64	Traffic light	0	-	Average (of DGAC and PCC)	0
9+623	65775	Medium trucks	-	1563	-	64	Traffic light	0	-	Average (of DGAC and PCC)	0
9+623	65775	Heavy trucks	-	205	-	64	Traffic light	0	-	Average (of DGAC and PCC)	0
9+623	65775	Buses	-	29	-	64	Traffic light	0	-	Average (of DGAC and PCC)	0
9+623	65775	Motorcycles	-	28	-	64	Traffic light	0	-	Average (of DGAC and PCC)	0
9+623	65775	Auxiliary Vehicle	-	-	-	64	Traffic light	0	-	Average (of DGAC and PCC)	0
9+692	*65775*	*Total*	-	*4385*	-	-	*Traffic light*	*0*	-	*Average (of DGAC and PCC)*	*0*
9+692	65775	Automobiles	-	2560	-	64	Traffic light	0	-	Average (of DGAC and PCC)	0
9+692	65775	Medium trucks	-	1563	-	64	Traffic light	0	-	Average (of DGAC and PCC)	0
9+692	65775	Heavy trucks	-	205	-	64	Traffic light	0	-	Average (of DGAC and PCC)	0
9+692	65775	Buses	-	29	-	64	Traffic light	0	-	Average (of DGAC and PCC)	0
9+692	65775	Motorcycles	-	28	-	64	Traffic light	0	-	Average (of DGAC and PCC)	0
9+692	65775	Auxiliary Vehicle	-	-	-	64	Traffic light	0	-	Average (of DGAC and PCC)	0
10+750	*67185*	*Total*	-	*4479*	-	-	*Traffic light*	*0*	-	*Average (of DGAC and PCC)*	*0*
10+750	67185	Automobiles	-	2615	-	64	Traffic light	0	-	Average (of DGAC and PCC)	0
10+750	67185	Medium trucks	-	1597	-	64	Traffic light	0	-	Average (of DGAC and PCC)	0
10+750	67185	Heavy trucks	-	209	-	64	Traffic light	0	-	Average (of DGAC and PCC)	0
10+750	67185	Buses	-	30	-	64	Traffic light	0	-	Average (of DGAC and PCC)	0
10+750	67185	Motorcycles	-	28	-	64	Traffic light	0	-	Average (of DGAC and PCC)	0
10+750	67185	Auxiliary Vehicle	-	-	-	64	Traffic light	0	-	Average (of DGAC and PCC)	0
11+048	-						-	-	-	-	-

0+000	*67185*	*Total*	-		*4479*	-	-	*Traffic light*	*0*	-	*Average (of DGAC and PCC)*	*0*
0+000	67185	Automobiles	-		2615	-		64 Traffic light	0	-	Average (of DGAC and PCC)	0
0+000	67185	Medium trucks	-		1597	-		64 Traffic light	0	-	Average (of DGAC and PCC)	0
0+000	67185	Heavy trucks	-		209	-		64 Traffic light	0	-	Average (of DGAC and PCC)	0
0+000	67185	Buses	-		30	-		64 Traffic light	0	-	Average (of DGAC and PCC)	0
0+000	67185	Motorcycles	-		28	-		64 Traffic light	0	-	Average (of DGAC and PCC)	0
0+000	67185	Auxiliary Vehicle	-	-	-			64 Traffic light	0	-	Average (of DGAC and PCC)	0
Rosemead Blvd NB	Traffic direction:	In entry direction										
2+808	*68415*	*Total*	-		*4561*	-	-	*Traffic light*	*0*	-	*Average (of DGAC and PCC)*	*0*
2+808	68415	Automobiles	-		2561	-		64 Traffic light	0	-	Average (of DGAC and PCC)	0
2+808	68415	Medium trucks	-		1564	-		64 Traffic light	0	-	Average (of DGAC and PCC)	0
2+808	68415	Heavy trucks	-		203	-		64 Traffic light	0	-	Average (of DGAC and PCC)	0
2+808	68415	Buses	-		205	-		64 Traffic light	0	-	Average (of DGAC and PCC)	0
2+808	68415	Motorcycles	-		28	-		64 Traffic light	0	-	Average (of DGAC and PCC)	0
2+808	68415	Auxiliary Vehicle	-	-	-			64 Traffic light	0	-	Average (of DGAC and PCC)	0
4+148	*65805*	*Total*	-		*4387*	-	-	*Traffic light*	*0*	-	*Average (of DGAC and PCC)*	*0*
4+148	65805	Automobiles	-		2561	-		64 Traffic light	0	-	Average (of DGAC and PCC)	0
4+148	65805	Medium trucks	-		1564	-		64 Traffic light	0	-	Average (of DGAC and PCC)	0
4+148	65805	Heavy trucks	-		205	-		64 Traffic light	0	-	Average (of DGAC and PCC)	0
4+148	65805	Buses	-		29	-		64 Traffic light	0	-	Average (of DGAC and PCC)	0
4+148	65805	Motorcycles	-		28	-		64 Traffic light	0	-	Average (of DGAC and PCC)	0
4+148	65805	Auxiliary Vehicle	-	-	-			64 Traffic light	0	-	Average (of DGAC and PCC)	0
4+544	*76695*	*Total*	-		*5113*	-	-	*Traffic light*	*0*	-	*Average (of DGAC and PCC)*	*0*
4+544	76695	Automobiles	-		2985	-		72 Traffic light	0	-	Average (of DGAC and PCC)	0
4+544	76695	Medium trucks	-		1823	-		72 Traffic light	0	-	Average (of DGAC and PCC)	0
4+544	76695	Heavy trucks	-		239	-		72 Traffic light	0	-	Average (of DGAC and PCC)	0
4+544	76695	Buses	-		34	-		72 Traffic light	0	-	Average (of DGAC and PCC)	0
4+544	76695	Motorcycles	-		32	-		72 Traffic light	0	-	Average (of DGAC and PCC)	0
4+544	76695	Auxiliary Vehicle	-	-	-			72 Traffic light	0	-	Average (of DGAC and PCC)	0
4+663	*76695*	*Total*	-		*5113*	-	-	*Traffic light*	*0*	-	*Average (of DGAC and PCC)*	*0*
4+663	76695	Automobiles	-		2985	-		72 Traffic light	0	-	Average (of DGAC and PCC)	0
4+663	76695	Medium trucks	-		1823	-		72 Traffic light	0	-	Average (of DGAC and PCC)	0
4+663	76695	Heavy trucks	-		239	-		72 Traffic light	0	-	Average (of DGAC and PCC)	0
4+663	76695	Buses	-		34	-		72 Traffic light	0	-	Average (of DGAC and PCC)	0
4+663	76695	Motorcycles	-		32	-		72 Traffic light	0	-	Average (of DGAC and PCC)	0
4+663	76695	Auxiliary Vehicle	-	-	-			72 Traffic light	0	-	Average (of DGAC and PCC)	0
5+034	*73635*	*Total*	-		*4909*	-	-	*Traffic light*	*0*	-	*Average (of DGAC and PCC)*	*0*
5+034	73635	Automobiles	-		2866	-		72 Traffic light	0	-	Average (of DGAC and PCC)	0
5+034	73635	Medium trucks	-		1750	-		72 Traffic light	0	-	Average (of DGAC and PCC)	0
5+034	73635	Heavy trucks	-		229	-		72 Traffic light	0	-	Average (of DGAC and PCC)	0
5+034	73635	Buses	-		33	-		72 Traffic light	0	-	Average (of DGAC and PCC)	0
5+034	73635	Motorcycles	-		31	-		72 Traffic light	0	-	Average (of DGAC and PCC)	0
5+034	73635	Auxiliary Vehicle	-	-	-			72 Traffic light	0	-	Average (of DGAC and PCC)	0
5+530	*86790*	*Total*	-		*5786*	-	-	*Traffic light*	*0*	-	*Average (of DGAC and PCC)*	*0*
5+530	86790	Automobiles	-		3378	-		72 Traffic light	0	-	Average (of DGAC and PCC)	0
5+530	86790	Medium trucks	-		2063	-		72 Traffic light	0	-	Average (of DGAC and PCC)	0
5+530	86790	Heavy trucks	-		270	-		72 Traffic light	0	-	Average (of DGAC and PCC)	0
5+530	86790	Buses	-		39	-		72 Traffic light	0	-	Average (of DGAC and PCC)	0
5+530	86790	Motorcycles	-		36	-		72 Traffic light	0	-	Average (of DGAC and PCC)	0
5+530	86790	Auxiliary Vehicle	-	-	-			72 Traffic light	0	-	Average (of DGAC and PCC)	0
5+811	*85710*	*Total*	-		*5714*	-	-	*none*	-	-	*Average (of DGAC and PCC)*	*0*
5+811	85710	Automobiles	-		3336	-		72 none	-	-	Average (of DGAC and PCC)	0
5+811	85710	Medium trucks	-		2037	-		72 none	-	-	Average (of DGAC and PCC)	0
5+811	85710	Heavy trucks	-		267	-		72 none	-	-	Average (of DGAC and PCC)	0
5+811	85710	Buses	-		38	-		72 none	-	-	Average (of DGAC and PCC)	0
5+811	85710	Motorcycles	-		36	-		72 none	-	-	Average (of DGAC and PCC)	0
5+811	85710	Auxiliary Vehicle	-	-	-			72 none	-	-	Average (of DGAC and PCC)	0
5+947	*85710*	*Total*	-		*5714*	-	-	*none*	-	-	*Average (of DGAC and PCC)*	*0*

5+947	85710	Automobiles	-	3336	-	72	none	-	-	Average (of DGAC and PCC)	0
5+947	85710	Medium trucks	-	2037	-	72	none	-	-	Average (of DGAC and PCC)	0
5+947	85710	Heavy trucks	-	267	-	72	none	-	-	Average (of DGAC and PCC)	0
5+947	85710	Buses	-	38	-	72	none	-	-	Average (of DGAC and PCC)	0
5+947	85710	Motorcycles	-	36	-	72	none	-	-	Average (of DGAC and PCC)	0
5+947	85710	Auxiliary Vehicle	-	-	-	72	none	-	-	Average (of DGAC and PCC)	0
6+119	*85710*	*Total*	-	*5714*	-	-	*none*	-	-	*Average (of DGAC and PCC)*	*0*
6+119	85710	Automobiles	-	3336	-	72	none	-	-	Average (of DGAC and PCC)	0
6+119	85710	Medium trucks	-	2037	-	72	none	-	-	Average (of DGAC and PCC)	0
6+119	85710	Heavy trucks	-	267	-	72	none	-	-	Average (of DGAC and PCC)	0
6+119	85710	Buses	-	38	-	72	none	-	-	Average (of DGAC and PCC)	0
6+119	85710	Motorcycles	-	36	-	72	none	-	-	Average (of DGAC and PCC)	0
6+119	85710	Auxiliary Vehicle	-	-	-	72	none	-	-	Average (of DGAC and PCC)	0
6+377	*70950*	*Total*	-	*4730*	-	-	*Traffic light*	*0*	-	*Average (of DGAC and PCC)*	*0*
6+377	70950	Automobiles	-	2761	-	64	Traffic light	0	-	Average (of DGAC and PCC)	0
6+377	70950	Medium trucks	-	1686	-	64	Traffic light	0	-	Average (of DGAC and PCC)	0
6+377	70950	Heavy trucks	-	221	-	64	Traffic light	0	-	Average (of DGAC and PCC)	0
6+377	70950	Buses	-	32	-	64	Traffic light	0	-	Average (of DGAC and PCC)	0
6+377	70950	Motorcycles	-	30	-	64	Traffic light	0	-	Average (of DGAC and PCC)	0
6+377	70950	Auxiliary Vehicle	-	-	-	64	Traffic light	0	-	Average (of DGAC and PCC)	0
7+281	*54375*	*Total*	-	*3625*	-	-	*Traffic light*	*0*	-	*Average (of DGAC and PCC)*	*0*
7+281	54375	Automobiles	-	2116	-	64	Traffic light	0	-	Average (of DGAC and PCC)	0
7+281	54375	Medium trucks	-	1292	-	64	Traffic light	0	-	Average (of DGAC and PCC)	0
7+281	54375	Heavy trucks	-	170	-	64	Traffic light	0	-	Average (of DGAC and PCC)	0
7+281	54375	Buses	-	24	-	64	Traffic light	0	-	Average (of DGAC and PCC)	0
7+281	54375	Motorcycles	-	23	-	64	Traffic light	0	-	Average (of DGAC and PCC)	0
7+281	54375	Auxiliary Vehicle	-	-	-	64	Traffic light	0	-	Average (of DGAC and PCC)	0
8+146	*54645*	*Total*	-	*3643*	-	-	*Traffic light*	*0*	-	*Average (of DGAC and PCC)*	*0*
8+146	54645	Automobiles	-	2127	-	64	Traffic light	0	-	Average (of DGAC and PCC)	0
8+146	54645	Medium trucks	-	1299	-	64	Traffic light	0	-	Average (of DGAC and PCC)	0
8+146	54645	Heavy trucks	-	170	-	64	Traffic light	0	-	Average (of DGAC and PCC)	0
8+146	54645	Buses	-	24	-	64	Traffic light	0	-	Average (of DGAC and PCC)	0
8+146	54645	Motorcycles	-	23	-	64	Traffic light	0	-	Average (of DGAC and PCC)	0
8+146	54645	Auxiliary Vehicle	-	-	-	64	Traffic light	0	-	Average (of DGAC and PCC)	0
10+565	*51645*	*Total*	-	*3443*	-	-	*Traffic light*	*0*	-	*Average (of DGAC and PCC)*	*0*
10+565	51645	Automobiles	-	2010	-	64	Traffic light	0	-	Average (of DGAC and PCC)	0
10+565	51645	Medium trucks	-	1227	-	64	Traffic light	0	-	Average (of DGAC and PCC)	0
10+565	51645	Heavy trucks	-	161	-	64	Traffic light	0	-	Average (of DGAC and PCC)	0
10+565	51645	Buses	-	23	-	64	Traffic light	0	-	Average (of DGAC and PCC)	0
10+565	51645	Motorcycles	-	22	-	64	Traffic light	0	-	Average (of DGAC and PCC)	0
10+565	51645	Auxiliary Vehicle	-	-	-	64	Traffic light	0	-	Average (of DGAC and PCC)	0
11+040	-						-	-	-	-	-
0+000	*51645*	*Total*	-	*3443*	-	-	*Traffic light*	*0*	-	*Average (of DGAC and PCC)*	*0*
0+000	51645	Automobiles	-	2010	-	64	Traffic light	0	-	Average (of DGAC and PCC)	0
0+000	51645	Medium trucks	-	1227	-	64	Traffic light	0	-	Average (of DGAC and PCC)	0
0+000	51645	Heavy trucks	-	161	-	64	Traffic light	0	-	Average (of DGAC and PCC)	0
0+000	51645	Buses	-	23	-	64	Traffic light	0	-	Average (of DGAC and PCC)	0
0+000	51645	Motorcycles	-	22	-	64	Traffic light	0	-	Average (of DGAC and PCC)	0
0+000	51645	Auxiliary Vehicle	-	-	-	64	Traffic light	0	-	Average (of DGAC and PCC)	0
Temple City Blvd SB	Traffic direction:	In entry direction									
2+808	*37005*	*Total*	-	*2467*	-	-	*none*	-	-	*Average (of DGAC and PCC)*	*0*
2+808	37005	Automobiles	-	1440	-	64	none	-	-	Average (of DGAC and PCC)	0
2+808	37005	Medium trucks	-	879	-	64	none	-	-	Average (of DGAC and PCC)	0
2+808	37005	Heavy trucks	-	115	-	64	none	-	-	Average (of DGAC and PCC)	0
2+808	37005	Buses	-	17	-	64	none	-	-	Average (of DGAC and PCC)	0
2+808	37005	Motorcycles	-	16	-	64	none	-	-	Average (of DGAC and PCC)	0
2+808	37005	Auxiliary Vehicle	-	-	-	64	none	-	-	Average (of DGAC and PCC)	0
3+362	*37005*	*Total*	-	*2467*	-	-	*Traffic light*	*0*	-	*Average (of DGAC and PCC)*	*0*

3+362	37005	Automobiles	-	1440	-		64	Traffic light	0	-	Average (of DGAC and PCC)		0
3+362	37005	Medium trucks	-	879	-		64	Traffic light	0	-	Average (of DGAC and PCC)		0
3+362	37005	Heavy trucks	-	115	-		64	Traffic light	0	-	Average (of DGAC and PCC)		0
3+362	37005	Buses	-	17	-		64	Traffic light	0	-	Average (of DGAC and PCC)		0
3+362	37005	Motorcycles	-	16	-		64	Traffic light	0	-	Average (of DGAC and PCC)		0
3+362	37005	Auxiliary Vehicle	-	-	-		64	Traffic light	0	-	Average (of DGAC and PCC)		0
3+722	*37005*	*Total*	-	*2467*	-	-	*none*	-	-		*Average (of DGAC and PCC)*		*0*
3+722	37005	Automobiles	-	1440	-		64	none	-	-	Average (of DGAC and PCC)		0
3+722	37005	Medium trucks	-	879	-		64	none	-	-	Average (of DGAC and PCC)		0
3+722	37005	Heavy trucks	-	115	-		64	none	-	-	Average (of DGAC and PCC)		0
3+722	37005	Buses	-	17	-		64	none	-	-	Average (of DGAC and PCC)		0
3+722	37005	Motorcycles	-	16	-		64	none	-	-	Average (of DGAC and PCC)		0
3+722	37005	Auxiliary Vehicle	-	-	-		64	none	-	-	Average (of DGAC and PCC)		0
4+536	*28665*	*Total*	-	*1911*	-	-	*Traffic light*		*0*	-	*Average (of DGAC and PCC)*		*0*
4+536	28665	Automobiles	-	1115	-		64	Traffic light	0	-	Average (of DGAC and PCC)		0
4+536	28665	Medium trucks	-	681	-		64	Traffic light	0	-	Average (of DGAC and PCC)		0
4+536	28665	Heavy trucks	-	90	-		64	Traffic light	0	-	Average (of DGAC and PCC)		0
4+536	28665	Buses	-	13	-		64	Traffic light	0	-	Average (of DGAC and PCC)		0
4+536	28665	Motorcycles	-	12	-		64	Traffic light	0	-	Average (of DGAC and PCC)		0
4+536	28665	Auxiliary Vehicle	-	-	-		64	Traffic light	0	-	Average (of DGAC and PCC)		0
4+670	*28665*	*Total*	-	*1911*	-	-	*none*	-	-		*Average (of DGAC and PCC)*		*0*
4+670	28665	Automobiles	-	1115	-		64	none	-	-	Average (of DGAC and PCC)		0
4+670	28665	Medium trucks	-	681	-		64	none	-	-	Average (of DGAC and PCC)		0
4+670	28665	Heavy trucks	-	90	-		64	none	-	-	Average (of DGAC and PCC)		0
4+670	28665	Buses	-	13	-		64	none	-	-	Average (of DGAC and PCC)		0
4+670	28665	Motorcycles	-	12	-		64	none	-	-	Average (of DGAC and PCC)		0
4+670	28665	Auxiliary Vehicle	-	-	-		64	none	-	-	Average (of DGAC and PCC)		0
5+426	*39105*	*Total*	-	*2607*	-	-	*Traffic light*		*0*	-	*Average (of DGAC and PCC)*		*0*
5+426	39105	Automobiles	-	1521	-		64	Traffic light	0	-	Average (of DGAC and PCC)		0
5+426	39105	Medium trucks	-	929	-		64	Traffic light	0	-	Average (of DGAC and PCC)		0
5+426	39105	Heavy trucks	-	122	-		64	Traffic light	0	-	Average (of DGAC and PCC)		0
5+426	39105	Buses	-	18	-		64	Traffic light	0	-	Average (of DGAC and PCC)		0
5+426	39105	Motorcycles	-	17	-		64	Traffic light	0	-	Average (of DGAC and PCC)		0
5+426	39105	Auxiliary Vehicle	-	-	-		64	Traffic light	0	-	Average (of DGAC and PCC)		0
5+698	-						-	-	-		-	-	
0+000	*37005*	*Total*	-	*2467*	-	-	*none*	-	-		*Average (of DGAC and PCC)*		*0*
0+000	37005	Automobiles	-	1440	-		64	none	-	-	Average (of DGAC and PCC)		0
0+000	37005	Medium trucks	-	879	-		64	none	-	-	Average (of DGAC and PCC)		0
0+000	37005	Heavy trucks	-	115	-		64	none	-	-	Average (of DGAC and PCC)		0
0+000	37005	Buses	-	17	-		64	none	-	-	Average (of DGAC and PCC)		0
0+000	37005	Motorcycles	-	16	-		64	none	-	-	Average (of DGAC and PCC)		0
0+000	37005	Auxiliary Vehicle	-	-	-		64	none	-	-	Average (of DGAC and PCC)		0
Temple City Blvd NB	Traffic direction:	In entry direction											
2+808	*33240*	*Total*	-	*2216*	-	-	*none*	-	-		*Average (of DGAC and PCC)*		*0*
2+808	33240	Automobiles	-	1293	-		40	none	-	-	Average (of DGAC and PCC)		0
2+808	33240	Medium trucks	-	790	-		40	none	-	-	Average (of DGAC and PCC)		0
2+808	33240	Heavy trucks	-	104	-		40	none	-	-	Average (of DGAC and PCC)		0
2+808	33240	Buses	-	15	-		40	none	-	-	Average (of DGAC and PCC)		0
2+808	33240	Motorcycles	-	14	-		40	none	-	-	Average (of DGAC and PCC)		0
2+808	33240	Auxiliary Vehicle	-	-	-		40	none	-	-	Average (of DGAC and PCC)		0
3+073	*37785*	*Total*	-	*2519*	-	-	*none*	-	-		*Average (of DGAC and PCC)*		*0*
3+073	37785	Automobiles	-	1470	-		40	none	-	-	Average (of DGAC and PCC)		0
3+073	37785	Medium trucks	-	898	-		40	none	-	-	Average (of DGAC and PCC)		0
3+073	37785	Heavy trucks	-	118	-		40	none	-	-	Average (of DGAC and PCC)		0
3+073	37785	Buses	-	17	-		40	none	-	-	Average (of DGAC and PCC)		0
3+073	37785	Motorcycles	-	16	-		40	none	-	-	Average (of DGAC and PCC)		0
3+073	37785	Auxiliary Vehicle	-	-	-		40	none	-	-	Average (of DGAC and PCC)		0
3+826	*37785*	*Total*	-	*2519*	-	-	*none*	-	-		*Average (of DGAC and PCC)*		*0*

3+826	37785	Automobiles	-	1470	-	40	none	-	-	Average (of DGAC and PCC)	0
3+826	37785	Medium trucks	-	898	-	40	none	-	-	Average (of DGAC and PCC)	0
3+826	37785	Heavy trucks	-	118	-	40	none	-	-	Average (of DGAC and PCC)	0
3+826	37785	Buses	-	17	-	40	none	-	-	Average (of DGAC and PCC)	0
3+826	37785	Motorcycles	-	16	-	40	none	-	-	Average (of DGAC and PCC)	0
3+826	37785	Auxiliary Vehicle	-	-	-	40	none	-	-	Average (of DGAC and PCC)	0
3+962	*36150*	*Total*	-	*2410*	-	-	*Traffic light*	*0*	-	*Average (of DGAC and PCC)*	*0*
3+962	36150	Automobiles	-	1407	-	64	Traffic light	0	-	Average (of DGAC and PCC)	0
3+962	36150	Medium trucks	-	859	-	64	Traffic light	0	-	Average (of DGAC and PCC)	0
3+962	36150	Heavy trucks	-	113	-	64	Traffic light	0	-	Average (of DGAC and PCC)	0
3+962	36150	Buses	-	16	-	64	Traffic light	0	-	Average (of DGAC and PCC)	0
3+962	36150	Motorcycles	-	15	-	64	Traffic light	0	-	Average (of DGAC and PCC)	0
3+962	36150	Auxiliary Vehicle	-	-	-	64	Traffic light	0	-	Average (of DGAC and PCC)	0
4+780	*36150*	*Total*	-	*2410*	-	-	*none*	-	-	*Average (of DGAC and PCC)*	*0*
4+780	36150	Automobiles	-	1407	-	64	none	-	-	Average (of DGAC and PCC)	0
4+780	36150	Medium trucks	-	859	-	64	none	-	-	Average (of DGAC and PCC)	0
4+780	36150	Heavy trucks	-	113	-	64	none	-	-	Average (of DGAC and PCC)	0
4+780	36150	Buses	-	16	-	64	none	-	-	Average (of DGAC and PCC)	0
4+780	36150	Motorcycles	-	15	-	64	none	-	-	Average (of DGAC and PCC)	0
4+780	36150	Auxiliary Vehicle	-	-	-	64	none	-	-	Average (of DGAC and PCC)	0
5+141	*36690*	*Total*	-	*2446*	-	-	*Traffic light*	*0*	-	*Average (of DGAC and PCC)*	*0*
5+141	36690	Automobiles	-	1427	-	64	Traffic light	0	-	Average (of DGAC and PCC)	0
5+141	36690	Medium trucks	-	872	-	64	Traffic light	0	-	Average (of DGAC and PCC)	0
5+141	36690	Heavy trucks	-	114	-	64	Traffic light	0	-	Average (of DGAC and PCC)	0
5+141	36690	Buses	-	17	-	64	Traffic light	0	-	Average (of DGAC and PCC)	0
5+141	36690	Motorcycles	-	16	-	64	Traffic light	0	-	Average (of DGAC and PCC)	0
5+141	36690	Auxiliary Vehicle	-	-	-	64	Traffic light	0	-	Average (of DGAC and PCC)	0
5+689	-						-	-	-	-	-
0+000	*36690*	*Total*	-	*2446*	-	-	*none*	-	-	*Average (of DGAC and PCC)*	*0*
0+000	36690	Automobiles	-	1427	-	64	none	-	-	Average (of DGAC and PCC)	0
0+000	36690	Medium trucks	-	872	-	64	none	-	-	Average (of DGAC and PCC)	0
0+000	36690	Heavy trucks	-	114	-	64	none	-	-	Average (of DGAC and PCC)	0
0+000	36690	Buses	-	17	-	64	none	-	-	Average (of DGAC and PCC)	0
0+000	36690	Motorcycles	-	16	-	64	none	-	-	Average (of DGAC and PCC)	0
0+000	36690	Auxiliary Vehicle	-	-	-	64	none	-	-	Average (of DGAC and PCC)	0
Chico Ave SB	Traffic direction:	In entry direction									
2+808	*8430*	*Total*	-	*562*	-	-	*Traffic light*	*0*	-	*Average (of DGAC and PCC)*	*0*
2+808	8430	Automobiles	-	327	-	40	Traffic light	0	-	Average (of DGAC and PCC)	0
2+808	8430	Medium trucks	-	200	-	40	Traffic light	0	-	Average (of DGAC and PCC)	0
2+808	8430	Heavy trucks	-	27	-	40	Traffic light	0	-	Average (of DGAC and PCC)	0
2+808	8430	Buses	-	4	-	40	Traffic light	0	-	Average (of DGAC and PCC)	0
2+808	8430	Motorcycles	-	4	-	40	Traffic light	0	-	Average (of DGAC and PCC)	0
2+808	8430	Auxiliary Vehicle	-	-	-	40	Traffic light	0	-	Average (of DGAC and PCC)	0
3+422	-						-	-	-	-	-
0+000	*8430*	*Total*	-	*562*	-	-	*none*	-	-	*Average (of DGAC and PCC)*	*0*
0+000	8430	Automobiles	-	327	-	40	none	-	-	Average (of DGAC and PCC)	0
0+000	8430	Medium trucks	-	200	-	40	none	-	-	Average (of DGAC and PCC)	0
0+000	8430	Heavy trucks	-	27	-	40	none	-	-	Average (of DGAC and PCC)	0
0+000	8430	Buses	-	4	-	40	none	-	-	Average (of DGAC and PCC)	0
0+000	8430	Motorcycles	-	4	-	40	none	-	-	Average (of DGAC and PCC)	0
0+000	8430	Auxiliary Vehicle	-	-	-	40	none	-	-	Average (of DGAC and PCC)	0
Merced Ave NB	Traffic direction:	In entry direction									
2+808	*480*	*Total*	-	*32*	-	-	*Traffic light*	*0*	-	*Average (of DGAC and PCC)*	*0*
2+808	480	Automobiles	-	17	-	56	Traffic light	0	-	Average (of DGAC and PCC)	0
2+808	480	Medium trucks	-	11	-	56	Traffic light	0	-	Average (of DGAC and PCC)	0
2+808	480	Heavy trucks	-	2	-	56	Traffic light	0	-	Average (of DGAC and PCC)	0
2+808	480	Buses	-	1	-	56	Traffic light	0	-	Average (of DGAC and PCC)	0
2+808	480	Motorcycles	-	1	-	56	Traffic light	0	-	Average (of DGAC and PCC)	0

2+808	480	Auxiliary Vehicle	-	-	-	56	Traffic light	0	-	Average (of DGAC and PCC)	0
3+415	-						-	-	-	-	-
0+000	*480*	*Total*	-	*32*	-	-	*Traffic light*	*0*	-	*Average (of DGAC and PCC)*	*0*
0+000	480	Automobiles	-	17	-	56	Traffic light	0	-	Average (of DGAC and PCC)	0
0+000	480	Medium trucks	-	11	-	56	Traffic light	0	-	Average (of DGAC and PCC)	0
0+000	480	Heavy trucks	-	2	-	56	Traffic light	0	-	Average (of DGAC and PCC)	0
0+000	480	Buses	-	1	-	56	Traffic light	0	-	Average (of DGAC and PCC)	0
0+000	480	Motorcycles	-	1	-	56	Traffic light	0	-	Average (of DGAC and PCC)	0
0+000	480	Auxiliary Vehicle	-	-	-	56	Traffic light	0	-	Average (of DGAC and PCC)	0
Merced Ave SB	Traffic direction:	In entry direction									
2+808	*12990*	*Total*	-	*866*	-	-	*none*	-	-	*Average (of DGAC and PCC)*	*0*
2+808	12990	Automobiles	-	505	-	56	none	-	-	Average (of DGAC and PCC)	0
2+808	12990	Medium trucks	-	308	-	56	none	-	-	Average (of DGAC and PCC)	0
2+808	12990	Heavy trucks	-	41	-	56	none	-	-	Average (of DGAC and PCC)	0
2+808	12990	Buses	-	6	-	56	none	-	-	Average (of DGAC and PCC)	0
2+808	12990	Motorcycles	-	6	-	56	none	-	-	Average (of DGAC and PCC)	0
2+808	12990	Auxiliary Vehicle	-	-	-	56	none	-	-	Average (of DGAC and PCC)	0
3+429	*12990*	*Total*	-	*866*	-	-	*Traffic light*	*0*	-	*Average (of DGAC and PCC)*	*0*
3+429	12990	Automobiles	-	505	-	56	Traffic light	0	-	Average (of DGAC and PCC)	0
3+429	12990	Medium trucks	-	308	-	56	Traffic light	0	-	Average (of DGAC and PCC)	0
3+429	12990	Heavy trucks	-	41	-	56	Traffic light	0	-	Average (of DGAC and PCC)	0
3+429	12990	Buses	-	6	-	56	Traffic light	0	-	Average (of DGAC and PCC)	0
3+429	12990	Motorcycles	-	6	-	56	Traffic light	0	-	Average (of DGAC and PCC)	0
3+429	12990	Auxiliary Vehicle	-	-	-	56	Traffic light	0	-	Average (of DGAC and PCC)	0
3+934	-						-	-	-	-	-
0+000	*12990*	*Total*	-	*866*	-	-	*none*	-	-	*Average (of DGAC and PCC)*	*0*
0+000	12990	Automobiles	-	505	-	56	none	-	-	Average (of DGAC and PCC)	0
0+000	12990	Medium trucks	-	308	-	56	none	-	-	Average (of DGAC and PCC)	0
0+000	12990	Heavy trucks	-	41	-	56	none	-	-	Average (of DGAC and PCC)	0
0+000	12990	Buses	-	6	-	56	none	-	-	Average (of DGAC and PCC)	0
0+000	12990	Motorcycles	-	6	-	56	none	-	-	Average (of DGAC and PCC)	0
0+000	12990	Auxiliary Vehicle	-	-	-	56	none	-	-	Average (of DGAC and PCC)	0
Merced Ave NB	Traffic direction:	In entry direction									
2+808	*9855*	*Total*	-	*657*	-	-	*none*	-	-	*Average (of DGAC and PCC)*	*0*
2+808	9855	Automobiles	-	382	-	56	none	-	-	Average (of DGAC and PCC)	0
2+808	9855	Medium trucks	-	234	-	56	none	-	-	Average (of DGAC and PCC)	0
2+808	9855	Heavy trucks	-	31	-	56	none	-	-	Average (of DGAC and PCC)	0
2+808	9855	Buses	-	5	-	56	none	-	-	Average (of DGAC and PCC)	0
2+808	9855	Motorcycles	-	5	-	56	none	-	-	Average (of DGAC and PCC)	0
2+808	9855	Auxiliary Vehicle	-	-	-	56	none	-	-	Average (of DGAC and PCC)	0
3+322	*9855*	*Total*	-	*657*	-	-	*Traffic light*	*0*	-	*Average (of DGAC and PCC)*	*0*
3+322	9855	Automobiles	-	382	-	56	Traffic light	0	-	Average (of DGAC and PCC)	0
3+322	9855	Medium trucks	-	234	-	56	Traffic light	0	-	Average (of DGAC and PCC)	0
3+322	9855	Heavy trucks	-	31	-	56	Traffic light	0	-	Average (of DGAC and PCC)	0
3+322	9855	Buses	-	5	-	56	Traffic light	0	-	Average (of DGAC and PCC)	0
3+322	9855	Motorcycles	-	5	-	56	Traffic light	0	-	Average (of DGAC and PCC)	0
3+322	9855	Auxiliary Vehicle	-	-	-	56	Traffic light	0	-	Average (of DGAC and PCC)	0
3+920	-						-	-	-	-	-
0+000	*9855*	*Total*	-	*657*	-	-	*none*	-	-	*Average (of DGAC and PCC)*	*0*
0+000	9855	Automobiles	-	382	-	56	none	-	-	Average (of DGAC and PCC)	0
0+000	9855	Medium trucks	-	234	-	56	none	-	-	Average (of DGAC and PCC)	0
0+000	9855	Heavy trucks	-	31	-	56	none	-	-	Average (of DGAC and PCC)	0
0+000	9855	Buses	-	5	-	56	none	-	-	Average (of DGAC and PCC)	0
0+000	9855	Motorcycles	-	5	-	56	none	-	-	Average (of DGAC and PCC)	0
0+000	9855	Auxiliary Vehicle	-	-	-	56	none	-	-	Average (of DGAC and PCC)	0
Glendon Way EB	Traffic direction:	In entry direction									
2+808	*22320*	*Total*	-	*1488*	-	-	*none*	-	-	*Average (of DGAC and PCC)*	*0*
2+808	22320	Automobiles	-	868	-	48	none	-	-	Average (of DGAC and PCC)	0

2+808	22320	Medium trucks	-	530	-	48	none	-	-	Average (of DGAC and PCC)	0
2+808	22320	Heavy trucks	-	70	-	48	none	-	-	Average (of DGAC and PCC)	0
2+808	22320	Buses	-	10	-	48	none	-	-	Average (of DGAC and PCC)	0
2+808	22320	Motorcycles	-	10	-	48	none	-	-	Average (of DGAC and PCC)	0
2+808	22320	Auxiliary Vehicle	-	-	-	48	none	-	-	Average (of DGAC and PCC)	0
3+208	*22320*	*Total*	-	*1488*	-	-	*Traffic light*	*0*	-	*Average (of DGAC and PCC)*	*0*
3+208	22320	Automobiles	-	868	-	48	Traffic light	0	-	Average (of DGAC and PCC)	0
3+208	22320	Medium trucks	-	530	-	48	Traffic light	0	-	Average (of DGAC and PCC)	0
3+208	22320	Heavy trucks	-	70	-	48	Traffic light	0	-	Average (of DGAC and PCC)	0
3+208	22320	Buses	-	10	-	48	Traffic light	0	-	Average (of DGAC and PCC)	0
3+208	22320	Motorcycles	-	10	-	48	Traffic light	0	-	Average (of DGAC and PCC)	0
3+208	22320	Auxiliary Vehicle	-	-	-	48	Traffic light	0	-	Average (of DGAC and PCC)	0
3+410	-						-	-	-	-	-
0+000	*22320*	*Total*	-	*1488*	-	-	*none*	-	-	*Average (of DGAC and PCC)*	*0*
0+000	22320	Automobiles	-	868	-	48	none	-	-	Average (of DGAC and PCC)	0
0+000	22320	Medium trucks	-	530	-	48	none	-	-	Average (of DGAC and PCC)	0
0+000	22320	Heavy trucks	-	70	-	48	none	-	-	Average (of DGAC and PCC)	0
0+000	22320	Buses	-	10	-	48	none	-	-	Average (of DGAC and PCC)	0
0+000	22320	Motorcycles	-	10	-	48	none	-	-	Average (of DGAC and PCC)	0
0+000	22320	Auxiliary Vehicle	-	-	-	48	none	-	-	Average (of DGAC and PCC)	0
Glendon Way WB	Traffic direction:	In entry direction									
3+410	*15330*	*Total*	-	*1022*	-	-	*none*	-	-	*Average (of DGAC and PCC)*	*0*
3+410	15330	Automobiles	-	596	-	48	none	-	-	Average (of DGAC and PCC)	0
3+410	15330	Medium trucks	-	364	-	48	none	-	-	Average (of DGAC and PCC)	0
3+410	15330	Heavy trucks	-	48	-	48	none	-	-	Average (of DGAC and PCC)	0
3+410	15330	Buses	-	7	-	48	none	-	-	Average (of DGAC and PCC)	0
3+410	15330	Motorcycles	-	7	-	48	none	-	-	Average (of DGAC and PCC)	0
3+410	15330	Auxiliary Vehicle	-	-	-	48	none	-	-	Average (of DGAC and PCC)	0
3+593	*15330*	*Total*	-	*1022*	-	-	*Traffic light*	*0*	-	*Average (of DGAC and PCC)*	*0*
3+593	15330	Automobiles	-	596	-	48	Traffic light	0	-	Average (of DGAC and PCC)	0
3+593	15330	Medium trucks	-	364	-	48	Traffic light	0	-	Average (of DGAC and PCC)	0
3+593	15330	Heavy trucks	-	48	-	48	Traffic light	0	-	Average (of DGAC and PCC)	0
3+593	15330	Buses	-	7	-	48	Traffic light	0	-	Average (of DGAC and PCC)	0
3+593	15330	Motorcycles	-	7	-	48	Traffic light	0	-	Average (of DGAC and PCC)	0
3+593	15330	Auxiliary Vehicle	-	-	-	48	Traffic light	0	-	Average (of DGAC and PCC)	0
4+011	-						-	-	-	-	-
0+000	*15330*	*Total*	-	*1022*	-	-	*none*	-	-	*Average (of DGAC and PCC)*	*0*
0+000	15330	Automobiles	-	596	-	48	none	-	-	Average (of DGAC and PCC)	0
0+000	15330	Medium trucks	-	364	-	48	none	-	-	Average (of DGAC and PCC)	0
0+000	15330	Heavy trucks	-	48	-	48	none	-	-	Average (of DGAC and PCC)	0
0+000	15330	Buses	-	7	-	48	none	-	-	Average (of DGAC and PCC)	0
0+000	15330	Motorcycles	-	7	-	48	none	-	-	Average (of DGAC and PCC)	0
0+000	15330	Auxiliary Vehicle	-	-	-	48	none	-	-	Average (of DGAC and PCC)	0
Rush St EB	Traffic direction:	In entry direction									
3+410	*27315*	*Total*	-	*1821*	-	-	*none*	-	-	*Average (of DGAC and PCC)*	*0*
3+410	27315	Automobiles	-	1063	-	56	none	-	-	Average (of DGAC and PCC)	0
3+410	27315	Medium trucks	-	649	-	56	none	-	-	Average (of DGAC and PCC)	0
3+410	27315	Heavy trucks	-	85	-	56	none	-	-	Average (of DGAC and PCC)	0
3+410	27315	Buses	-	12	-	56	none	-	-	Average (of DGAC and PCC)	0
3+410	27315	Motorcycles	-	12	-	56	none	-	-	Average (of DGAC and PCC)	0
3+410	27315	Auxiliary Vehicle	-	-	-	56	none	-	-	Average (of DGAC and PCC)	0
3+836	*27315*	*Total*	-	*1821*	-	-	*Traffic light*	*0*	-	*Average (of DGAC and PCC)*	*0*
3+836	27315	Automobiles	-	1063	-	56	Traffic light	0	-	Average (of DGAC and PCC)	0
3+836	27315	Medium trucks	-	649	-	56	Traffic light	0	-	Average (of DGAC and PCC)	0
3+836	27315	Heavy trucks	-	85	-	56	Traffic light	0	-	Average (of DGAC and PCC)	0
3+836	27315	Buses	-	12	-	56	Traffic light	0	-	Average (of DGAC and PCC)	0
3+836	27315	Motorcycles	-	12	-	56	Traffic light	0	-	Average (of DGAC and PCC)	0
3+836	27315	Auxiliary Vehicle	-	-	-	56	Traffic light	0	-	Average (of DGAC and PCC)	0

4+734	-						-	-	-	-	-	
0+000	*27315*	*Total*	-	*1821*	-	-	*none*	-	-	*Average (of DGAC and PCC)*		*0*
0+000	27315	Automobiles	-	1063	-		56 none	-	-	Average (of DGAC and PCC)		0
0+000	27315	Medium trucks	-	649	-		56 none	-	-	Average (of DGAC and PCC)		0
0+000	27315	Heavy trucks	-	85	-		56 none	-	-	Average (of DGAC and PCC)		0
0+000	27315	Buses	-	12	-		56 none	-	-	Average (of DGAC and PCC)		0
0+000	27315	Motorcycles	-	12	-		56 none	-	-	Average (of DGAC and PCC)		0
0+000	27315	Auxiliary Vehicle	-	-	-		56 none	-	-	Average (of DGAC and PCC)		0
Rush St WB	Traffic direction:	In entry direction										
4+734	*8505*	*Total*	-	*567*	-	-	*none*	-	-	*Average (of DGAC and PCC)*		*0*
4+734	8505	Automobiles	-	330	-		56 none	-	-	Average (of DGAC and PCC)		0
4+734	8505	Medium trucks	-	202	-		56 none	-	-	Average (of DGAC and PCC)		0
4+734	8505	Heavy trucks	-	27	-		56 none	-	-	Average (of DGAC and PCC)		0
4+734	8505	Buses	-	4	-		56 none	-	-	Average (of DGAC and PCC)		0
4+734	8505	Motorcycles	-	4	-		56 none	-	-	Average (of DGAC and PCC)		0
4+734	8505	Auxiliary Vehicle	-	-	-		56 none	-	-	Average (of DGAC and PCC)		0
5+605	*8505*	*Total*	-	*567*	-	-	*Traffic light*	*0*	-	*Average (of DGAC and PCC)*		*0*
5+605	8505	Automobiles	-	330	-		56 Traffic light	0	-	Average (of DGAC and PCC)		0
5+605	8505	Medium trucks	-	202	-		56 Traffic light	0	-	Average (of DGAC and PCC)		0
5+605	8505	Heavy trucks	-	27	-		56 Traffic light	0	-	Average (of DGAC and PCC)		0
5+605	8505	Buses	-	4	-		56 Traffic light	0	-	Average (of DGAC and PCC)		0
5+605	8505	Motorcycles	-	4	-		56 Traffic light	0	-	Average (of DGAC and PCC)		0
5+605	8505	Auxiliary Vehicle	-	-	-		56 Traffic light	0	-	Average (of DGAC and PCC)		0
6+061	-						-	-	-	-	-	
0+000	*8505*	*Total*	-	*567*	-	-	*none*	-	-	*Average (of DGAC and PCC)*		*0*
0+000	8505	Automobiles	-	330	-		56 none	-	-	Average (of DGAC and PCC)		0
0+000	8505	Medium trucks	-	202	-		56 none	-	-	Average (of DGAC and PCC)		0
0+000	8505	Heavy trucks	-	27	-		56 none	-	-	Average (of DGAC and PCC)		0
0+000	8505	Buses	-	4	-		56 none	-	-	Average (of DGAC and PCC)		0
0+000	8505	Motorcycles	-	4	-		56 none	-	-	Average (of DGAC and PCC)		0
0+000	8505	Auxiliary Vehicle	-	-	-		56 none	-	-	Average (of DGAC and PCC)		0
Garvey Ave EB	Traffic direction:	In entry direction										
4+734	*44160*	*Total*	-	*2944*	-	-	*none*	-	-	*Average (of DGAC and PCC)*		*0*
4+734	44160	Automobiles	-	1718	-		56 none	-	-	Average (of DGAC and PCC)		0
4+734	44160	Medium trucks	-	1049	-		56 none	-	-	Average (of DGAC and PCC)		0
4+734	44160	Heavy trucks	-	138	-		56 none	-	-	Average (of DGAC and PCC)		0
4+734	44160	Buses	-	20	-		56 none	-	-	Average (of DGAC and PCC)		0
4+734	44160	Motorcycles	-	19	-		56 none	-	-	Average (of DGAC and PCC)		0
4+734	44160	Auxiliary Vehicle	-	-	-		56 none	-	-	Average (of DGAC and PCC)		0
5+192	*44160*	*Total*	-	*2944*	-	-	*Traffic light*	*0*	-	*Average (of DGAC and PCC)*		*0*
5+192	44160	Automobiles	-	1718	-		56 Traffic light	0	-	Average (of DGAC and PCC)		0
5+192	44160	Medium trucks	-	1049	-		56 Traffic light	0	-	Average (of DGAC and PCC)		0
5+192	44160	Heavy trucks	-	138	-		56 Traffic light	0	-	Average (of DGAC and PCC)		0
5+192	44160	Buses	-	20	-		56 Traffic light	0	-	Average (of DGAC and PCC)		0
5+192	44160	Motorcycles	-	19	-		56 Traffic light	0	-	Average (of DGAC and PCC)		0
5+192	44160	Auxiliary Vehicle	-	-	-		56 Traffic light	0	-	Average (of DGAC and PCC)		0
7+099	*43695*	*Total*	-	*2913*	-	-	*Traffic light*	*0*	-	*Average (of DGAC and PCC)*		*0*
7+099	43695	Automobiles	-	1701	-		56 Traffic light	0	-	Average (of DGAC and PCC)		0
7+099	43695	Medium trucks	-	1038	-		56 Traffic light	0	-	Average (of DGAC and PCC)		0
7+099	43695	Heavy trucks	-	136	-		56 Traffic light	0	-	Average (of DGAC and PCC)		0
7+099	43695	Buses	-	20	-		56 Traffic light	0	-	Average (of DGAC and PCC)		0
7+099	43695	Motorcycles	-	18	-		56 Traffic light	0	-	Average (of DGAC and PCC)		0
7+099	43695	Auxiliary Vehicle	-	-	-		56 Traffic light	0	-	Average (of DGAC and PCC)		0
7+714	*43260*	*Total*	-	*2884*	-	-	*Traffic light*	*0*	-	*Average (of DGAC and PCC)*		*0*
7+714	43260	Automobiles	-	1684	-		56 Traffic light	0	-	Average (of DGAC and PCC)		0
7+714	43260	Medium trucks	-	1028	-		56 Traffic light	0	-	Average (of DGAC and PCC)		0
7+714	43260	Heavy trucks	-	135	-		56 Traffic light	0	-	Average (of DGAC and PCC)		0
7+714	43260	Buses	-	19	-		56 Traffic light	0	-	Average (of DGAC and PCC)		0

7+714	43260	Motorcycles	-	18	-	56	Traffic light	0	-	Average (of DGAC and PCC)	0
7+714	43260	Auxiliary Vehicle	-	-	-	56	Traffic light	0	-	Average (of DGAC and PCC)	0
8+723	*37620*	*Total*	-	*2508*	-	-	*Traffic light*	*0*	-	*Average (of DGAC and PCC)*	*0*
8+723	37620	Automobiles	-	1464	-	56	Traffic light	0	-	Average (of DGAC and PCC)	0
8+723	37620	Medium trucks	-	894	-	56	Traffic light	0	-	Average (of DGAC and PCC)	0
8+723	37620	Heavy trucks	-	117	-	56	Traffic light	0	-	Average (of DGAC and PCC)	0
8+723	37620	Buses	-	17	-	56	Traffic light	0	-	Average (of DGAC and PCC)	0
8+723	37620	Motorcycles	-	16	-	56	Traffic light	0	-	Average (of DGAC and PCC)	0
8+723	37620	Auxiliary Vehicle	-	-	-	56	Traffic light	0	-	Average (of DGAC and PCC)	0
9+740	*35595*	*Total*	-	*2373*	-	-	*Traffic light*	*0*	-	*Average (of DGAC and PCC)*	*0*
9+740	35595	Automobiles	-	1385	-	56	Traffic light	0	-	Average (of DGAC and PCC)	0
9+740	35595	Medium trucks	-	846	-	56	Traffic light	0	-	Average (of DGAC and PCC)	0
9+740	35595	Heavy trucks	-	111	-	56	Traffic light	0	-	Average (of DGAC and PCC)	0
9+740	35595	Buses	-	16	-	56	Traffic light	0	-	Average (of DGAC and PCC)	0
9+740	35595	Motorcycles	-	15	-	56	Traffic light	0	-	Average (of DGAC and PCC)	0
9+740	35595	Auxiliary Vehicle	-	-	-	56	Traffic light	0	-	Average (of DGAC and PCC)	0
10+522	*37125*	*Total*	-	*2475*	-	-	*Traffic light*	*0*	-	*Average (of DGAC and PCC)*	*0*
10+522	37125	Automobiles	-	1444	-	56	Traffic light	0	-	Average (of DGAC and PCC)	0
10+522	37125	Medium trucks	-	882	-	56	Traffic light	0	-	Average (of DGAC and PCC)	0
10+522	37125	Heavy trucks	-	116	-	56	Traffic light	0	-	Average (of DGAC and PCC)	0
10+522	37125	Buses	-	17	-	56	Traffic light	0	-	Average (of DGAC and PCC)	0
10+522	37125	Motorcycles	-	16	-	56	Traffic light	0	-	Average (of DGAC and PCC)	0
10+522	37125	Auxiliary Vehicle	-	-	-	56	Traffic light	0	-	Average (of DGAC and PCC)	0
11+106	*29835*	*Total*	-	*1989*	-	-	*Traffic light*	*0*	-	*Average (of DGAC and PCC)*	*0*
11+106	29835	Automobiles	-	1160	-	56	Traffic light	0	-	Average (of DGAC and PCC)	0
11+106	29835	Medium trucks	-	709	-	56	Traffic light	0	-	Average (of DGAC and PCC)	0
11+106	29835	Heavy trucks	-	93	-	56	Traffic light	0	-	Average (of DGAC and PCC)	0
11+106	29835	Buses	-	14	-	56	Traffic light	0	-	Average (of DGAC and PCC)	0
11+106	29835	Motorcycles	-	13	-	56	Traffic light	0	-	Average (of DGAC and PCC)	0
11+106	29835	Auxiliary Vehicle	-	-	-	56	Traffic light	0	-	Average (of DGAC and PCC)	0
12+391	*28245*	*Total*	-	*1883*	-	-	*Traffic light*	*0*	-	*Average (of DGAC and PCC)*	*0*
12+391	28245	Automobiles	-	1099	-	56	Traffic light	0	-	Average (of DGAC and PCC)	0
12+391	28245	Medium trucks	-	671	-	56	Traffic light	0	-	Average (of DGAC and PCC)	0
12+391	28245	Heavy trucks	-	88	-	56	Traffic light	0	-	Average (of DGAC and PCC)	0
12+391	28245	Buses	-	13	-	56	Traffic light	0	-	Average (of DGAC and PCC)	0
12+391	28245	Motorcycles	-	12	-	56	Traffic light	0	-	Average (of DGAC and PCC)	0
12+391	28245	Auxiliary Vehicle	-	-	-	56	Traffic light	0	-	Average (of DGAC and PCC)	0
12+962	-						-	-	-	-	-
0+000	*28245*	*Total*	-	*1883*	-	-	*none*	-	-	*Average (of DGAC and PCC)*	*0*
0+000	28245	Automobiles	-	1099	-	56	none	-	-	Average (of DGAC and PCC)	0
0+000	28245	Medium trucks	-	671	-	56	none	-	-	Average (of DGAC and PCC)	0
0+000	28245	Heavy trucks	-	88	-	56	none	-	-	Average (of DGAC and PCC)	0
0+000	28245	Buses	-	13	-	56	none	-	-	Average (of DGAC and PCC)	0
0+000	28245	Motorcycles	-	12	-	56	none	-	-	Average (of DGAC and PCC)	0
0+000	28245	Auxiliary Vehicle	-	-	-	56	none	-	-	Average (of DGAC and PCC)	0
Garvey Ave WB	Traffic direction:	In entry direction									
4+734	*32490*	*Total*	-	*2166*	-	-	*none*	-	-	*Average (of DGAC and PCC)*	*0*
4+734	32490	Automobiles	-	1264	-	56	none	-	-	Average (of DGAC and PCC)	0
4+734	32490	Medium trucks	-	772	-	56	none	-	-	Average (of DGAC and PCC)	0
4+734	32490	Heavy trucks	-	101	-	56	none	-	-	Average (of DGAC and PCC)	0
4+734	32490	Buses	-	15	-	56	none	-	-	Average (of DGAC and PCC)	0
4+734	32490	Motorcycles	-	14	-	56	none	-	-	Average (of DGAC and PCC)	0
4+734	32490	Auxiliary Vehicle	-	-	-	56	none	-	-	Average (of DGAC and PCC)	0
5+289	*32490*	*Total*	-	*2166*	-	-	*none*	-	-	*Average (of DGAC and PCC)*	*0*
5+289	32490	Automobiles	-	1264	-	56	none	-	-	Average (of DGAC and PCC)	0
5+289	32490	Medium trucks	-	772	-	56	none	-	-	Average (of DGAC and PCC)	0
5+289	32490	Heavy trucks	-	101	-	56	none	-	-	Average (of DGAC and PCC)	0
5+289	32490	Buses	-	15	-	56	none	-	-	Average (of DGAC and PCC)	0

5+289		32490	Motorcycles	-		14	-		56	none	-	-	Average (of DGAC and PCC)	0
5+289		32490	Auxiliary Vehicle	-	-	-			56	none	-	-	Average (of DGAC and PCC)	0
6+571		*38385*	*Total*	-		*2559*	-	-		*Traffic light*	*0*	-	*Average (of DGAC and PCC)*	*0*
6+571		38385	Automobiles	-		1494	-		56	Traffic light	0	-	Average (of DGAC and PCC)	0
6+571		38385	Medium trucks	-		912	-		56	Traffic light	0	-	Average (of DGAC and PCC)	0
6+571		38385	Heavy trucks	-		120	-		56	Traffic light	0	-	Average (of DGAC and PCC)	0
6+571		38385	Buses	-		17	-		56	Traffic light	0	-	Average (of DGAC and PCC)	0
6+571		38385	Motorcycles	-		16	-		56	Traffic light	0	-	Average (of DGAC and PCC)	0
6+571		38385	Auxiliary Vehicle	-	-	-			56	Traffic light	0	-	Average (of DGAC and PCC)	0
7+167		*37155*	*Total*	-		*2477*	-	-		*Traffic light*	*0*	-	*Average (of DGAC and PCC)*	*0*
7+167		37155	Automobiles	-		1445	-		56	Traffic light	0	-	Average (of DGAC and PCC)	0
7+167		37155	Medium trucks	-		883	-		56	Traffic light	0	-	Average (of DGAC and PCC)	0
7+167		37155	Heavy trucks	-		116	-		56	Traffic light	0	-	Average (of DGAC and PCC)	0
7+167		37155	Buses	-		17	-		56	Traffic light	0	-	Average (of DGAC and PCC)	0
7+167		37155	Motorcycles	-		16	-		56	Traffic light	0	-	Average (of DGAC and PCC)	0
7+167		37155	Auxiliary Vehicle	-	-	-			56	Traffic light	0	-	Average (of DGAC and PCC)	0
7+933		*41925*	*Total*	-		*2795*	-	-		*Traffic light*	*0*	-	*Average (of DGAC and PCC)*	*0*
7+933		41925	Automobiles	-		1631	-		56	Traffic light	0	-	Average (of DGAC and PCC)	0
7+933		41925	Medium trucks	-		996	-		56	Traffic light	0	-	Average (of DGAC and PCC)	0
7+933		41925	Heavy trucks	-		131	-		56	Traffic light	0	-	Average (of DGAC and PCC)	0
7+933		41925	Buses	-		19	-		56	Traffic light	0	-	Average (of DGAC and PCC)	0
7+933		41925	Motorcycles	-		18	-		56	Traffic light	0	-	Average (of DGAC and PCC)	0
7+933		41925	Auxiliary Vehicle	-	-	-			56	Traffic light	0	-	Average (of DGAC and PCC)	0
8+957		*40620*	*Total*	-		*2708*	-	-		*Traffic light*	*0*	-	*Average (of DGAC and PCC)*	*0*
8+957		40620	Automobiles	-		1581	-		56	Traffic light	0	-	Average (of DGAC and PCC)	0
8+957		40620	Medium trucks	-		965	-		56	Traffic light	0	-	Average (of DGAC and PCC)	0
8+957		40620	Heavy trucks	-		127	-		56	Traffic light	0	-	Average (of DGAC and PCC)	0
8+957		40620	Buses	-		18	-		56	Traffic light	0	-	Average (of DGAC and PCC)	0
8+957		40620	Motorcycles	-		17	-		56	Traffic light	0	-	Average (of DGAC and PCC)	0
8+957		40620	Auxiliary Vehicle	-	-	-			56	Traffic light	0	-	Average (of DGAC and PCC)	0
9+957		*42660*	*Total*	-		*2844*	-	-		*Traffic light*	*0*	-	*Average (of DGAC and PCC)*	*0*
9+957		42660	Automobiles	-		1660	-		56	Traffic light	0	-	Average (of DGAC and PCC)	0
9+957		42660	Medium trucks	-		1014	-		56	Traffic light	0	-	Average (of DGAC and PCC)	0
9+957		42660	Heavy trucks	-		133	-		56	Traffic light	0	-	Average (of DGAC and PCC)	0
9+957		42660	Buses	-		19	-		56	Traffic light	0	-	Average (of DGAC and PCC)	0
9+957		42660	Motorcycles	-		18	-		56	Traffic light	0	-	Average (of DGAC and PCC)	0
9+957		42660	Auxiliary Vehicle	-	-	-			56	Traffic light	0	-	Average (of DGAC and PCC)	0
10+579		*40275*	*Total*	-		*2685*	-	-		*Traffic light*	*0*	-	*Average (of DGAC and PCC)*	*0*
10+579		40275	Automobiles	-		1567	-		56	Traffic light	0	-	Average (of DGAC and PCC)	0
10+579		40275	Medium trucks	-		957	-		56	Traffic light	0	-	Average (of DGAC and PCC)	0
10+579		40275	Heavy trucks	-		126	-		56	Traffic light	0	-	Average (of DGAC and PCC)	0
10+579		40275	Buses	-		18	-		56	Traffic light	0	-	Average (of DGAC and PCC)	0
10+579		40275	Motorcycles	-		17	-		56	Traffic light	0	-	Average (of DGAC and PCC)	0
10+579		40275	Auxiliary Vehicle	-	-	-			56	Traffic light	0	-	Average (of DGAC and PCC)	0
12+470		*42210*	*Total*	-		*2814*	-	-		*Traffic light*	*0*	-	*Average (of DGAC and PCC)*	*0*
12+470		42210	Automobiles	-		1642	-		56	Traffic light	0	-	Average (of DGAC and PCC)	0
12+470		42210	Medium trucks	-		1003	-		56	Traffic light	0	-	Average (of DGAC and PCC)	0
12+470		42210	Heavy trucks	-		132	-		56	Traffic light	0	-	Average (of DGAC and PCC)	0
12+470		42210	Buses	-		19	-		56	Traffic light	0	-	Average (of DGAC and PCC)	0
12+470		42210	Motorcycles	-		18	-		56	Traffic light	0	-	Average (of DGAC and PCC)	0
12+470		42210	Auxiliary Vehicle	-	-	-			56	Traffic light	0	-	Average (of DGAC and PCC)	0
12+959	-								-		-	-	-	-
0+000		*42210*	*Total*	-		*2814*	-	-		*none*	-	-	*Average (of DGAC and PCC)*	*0*
0+000		42210	Automobiles	-		1642	-		56	none	-	-	Average (of DGAC and PCC)	0
0+000		42210	Medium trucks	-		1003	-		56	none	-	-	Average (of DGAC and PCC)	0
0+000		42210	Heavy trucks	-		132	-		56	none	-	-	Average (of DGAC and PCC)	0
0+000		42210	Buses	-		19	-		56	none	-	-	Average (of DGAC and PCC)	0
0+000		42210	Motorcycles	-		18	-		56	none	-	-	Average (of DGAC and PCC)	0

0+000	42210	Auxiliary Vehicle	-	-	-	56	none	-	-	Average (of DGAC and PCC)	0
Las Tunas Dr EB	Traffic direction:	In entry direction									
2+808	*40065*	*Total*	-	*2671*	-	-	*none*	-	-	*Average (of DGAC and PCC)*	*0*
2+808	40065	Automobiles	-	1559	-	48	none	-	-	Average (of DGAC and PCC)	0
2+808	40065	Medium trucks	-	952	-	48	none	-	-	Average (of DGAC and PCC)	0
2+808	40065	Heavy trucks	-	125	-	48	none	-	-	Average (of DGAC and PCC)	0
2+808	40065	Buses	-	18	-	48	none	-	-	Average (of DGAC and PCC)	0
2+808	40065	Motorcycles	-	17	-	48	none	-	-	Average (of DGAC and PCC)	0
2+808	40065	Auxiliary Vehicle	-	-	-	48	none	-	-	Average (of DGAC and PCC)	0
3+588	*40065*	*Total*	-	*2671*	-	-	*none*	-	-	*Average (of DGAC and PCC)*	*0*
3+588	40065	Automobiles	-	1559	-	48	none	-	-	Average (of DGAC and PCC)	0
3+588	40065	Medium trucks	-	952	-	48	none	-	-	Average (of DGAC and PCC)	0
3+588	40065	Heavy trucks	-	125	-	48	none	-	-	Average (of DGAC and PCC)	0
3+588	40065	Buses	-	18	-	48	none	-	-	Average (of DGAC and PCC)	0
3+588	40065	Motorcycles	-	17	-	48	none	-	-	Average (of DGAC and PCC)	0
3+588	40065	Auxiliary Vehicle	-	-	-	48	none	-	-	Average (of DGAC and PCC)	0
3+744	*40065*	*Total*	-	*2671*	-	-	*Traffic light*	*0*	-	*Average (of DGAC and PCC)*	*0*
3+744	40065	Automobiles	-	1559	-	48	Traffic light	0	-	Average (of DGAC and PCC)	0
3+744	40065	Medium trucks	-	952	-	48	Traffic light	0	-	Average (of DGAC and PCC)	0
3+744	40065	Heavy trucks	-	125	-	48	Traffic light	0	-	Average (of DGAC and PCC)	0
3+744	40065	Buses	-	18	-	48	Traffic light	0	-	Average (of DGAC and PCC)	0
3+744	40065	Motorcycles	-	17	-	48	Traffic light	0	-	Average (of DGAC and PCC)	0
3+744	40065	Auxiliary Vehicle	-	-	-	48	Traffic light	0	-	Average (of DGAC and PCC)	0
3+954	*40065*	*Total*	-	*2671*	-	-	*none*	-	-	*Average (of DGAC and PCC)*	*0*
3+954	40065	Automobiles	-	1559	-	48	none	-	-	Average (of DGAC and PCC)	0
3+954	40065	Medium trucks	-	952	-	48	none	-	-	Average (of DGAC and PCC)	0
3+954	40065	Heavy trucks	-	125	-	48	none	-	-	Average (of DGAC and PCC)	0
3+954	40065	Buses	-	18	-	48	none	-	-	Average (of DGAC and PCC)	0
3+954	40065	Motorcycles	-	17	-	48	none	-	-	Average (of DGAC and PCC)	0
3+954	40065	Auxiliary Vehicle	-	-	-	48	none	-	-	Average (of DGAC and PCC)	0
4+215	*40065*	*Total*	-	*2671*	-	-	*none*	-	-	*Average (of DGAC and PCC)*	*0*
4+215	40065	Automobiles	-	1559	-	48	none	-	-	Average (of DGAC and PCC)	0
4+215	40065	Medium trucks	-	952	-	48	none	-	-	Average (of DGAC and PCC)	0
4+215	40065	Heavy trucks	-	125	-	48	none	-	-	Average (of DGAC and PCC)	0
4+215	40065	Buses	-	18	-	48	none	-	-	Average (of DGAC and PCC)	0
4+215	40065	Motorcycles	-	17	-	48	none	-	-	Average (of DGAC and PCC)	0
4+215	40065	Auxiliary Vehicle	-	-	-	48	none	-	-	Average (of DGAC and PCC)	0
4+861	-						-	-	-	-	-
0+000	*40065*	*Total*	-	*2671*	-	-	*none*	-	-	*Average (of DGAC and PCC)*	*0*
0+000	40065	Automobiles	-	1559	-	48	none	-	-	Average (of DGAC and PCC)	0
0+000	40065	Medium trucks	-	952	-	48	none	-	-	Average (of DGAC and PCC)	0
0+000	40065	Heavy trucks	-	125	-	48	none	-	-	Average (of DGAC and PCC)	0
0+000	40065	Buses	-	18	-	48	none	-	-	Average (of DGAC and PCC)	0
0+000	40065	Motorcycles	-	17	-	48	none	-	-	Average (of DGAC and PCC)	0
0+000	40065	Auxiliary Vehicle	-	-	-	48	none	-	-	Average (of DGAC and PCC)	0
Las Tunas Dr WB	Traffic direction:	In entry direction									
3+954	*38805*	*Total*	-	*2587*	-	-	*none*	-	-	*Average (of DGAC and PCC)*	*0*
3+954	38805	Automobiles	-	1510	-	48	none	-	-	Average (of DGAC and PCC)	0
3+954	38805	Medium trucks	-	922	-	48	none	-	-	Average (of DGAC and PCC)	0
3+954	38805	Heavy trucks	-	121	-	48	none	-	-	Average (of DGAC and PCC)	0
3+954	38805	Buses	-	18	-	48	none	-	-	Average (of DGAC and PCC)	0
3+954	38805	Motorcycles	-	16	-	48	none	-	-	Average (of DGAC and PCC)	0
3+954	38805	Auxiliary Vehicle	-	-	-	48	none	-	-	Average (of DGAC and PCC)	0
4+598	*38805*	*Total*	-	*2587*	-	-	*Traffic light*	*0*	-	*Average (of DGAC and PCC)*	*0*
4+598	38805	Automobiles	-	1510	-	48	Traffic light	0	-	Average (of DGAC and PCC)	0
4+598	38805	Medium trucks	-	922	-	48	Traffic light	0	-	Average (of DGAC and PCC)	0
4+598	38805	Heavy trucks	-	121	-	48	Traffic light	0	-	Average (of DGAC and PCC)	0
4+598	38805	Buses	-	18	-	48	Traffic light	0	-	Average (of DGAC and PCC)	0

4+598	38805	Motorcycles	-	16	-	48	Traffic light	0	-	Average (of DGAC and PCC)	0
4+598	38805	Auxiliary Vehicle	-	-	-	48	Traffic light	0	-	Average (of DGAC and PCC)	0
4+863	*38805*	*Total*	-	*2587*	-	-	*none*	-	-	*Average (of DGAC and PCC)*	*0*
4+863	38805	Automobiles	-	1510	-	48	none	-	-	Average (of DGAC and PCC)	0
4+863	38805	Medium trucks	-	922	-	48	none	-	-	Average (of DGAC and PCC)	0
4+863	38805	Heavy trucks	-	121	-	48	none	-	-	Average (of DGAC and PCC)	0
4+863	38805	Buses	-	18	-	48	none	-	-	Average (of DGAC and PCC)	0
4+863	38805	Motorcycles	-	16	-	48	none	-	-	Average (of DGAC and PCC)	0
4+863	38805	Auxiliary Vehicle	-	-	-	48	none	-	-	Average (of DGAC and PCC)	0
5+049	*38805*	*Total*	-	*2587*	-	-	*Traffic light*	*0*	-	*Average (of DGAC and PCC)*	*0*
5+049	38805	Automobiles	-	1510	-	48	Traffic light	0	-	Average (of DGAC and PCC)	0
5+049	38805	Medium trucks	-	922	-	48	Traffic light	0	-	Average (of DGAC and PCC)	0
5+049	38805	Heavy trucks	-	121	-	48	Traffic light	0	-	Average (of DGAC and PCC)	0
5+049	38805	Buses	-	18	-	48	Traffic light	0	-	Average (of DGAC and PCC)	0
5+049	38805	Motorcycles	-	16	-	48	Traffic light	0	-	Average (of DGAC and PCC)	0
5+049	38805	Auxiliary Vehicle	-	-	-	48	Traffic light	0	-	Average (of DGAC and PCC)	0
5+216	*38805*	*Total*	-	*2587*	-	-	*none*	-	-	*Average (of DGAC and PCC)*	*0*
5+216	38805	Automobiles	-	1510	-	48	none	-	-	Average (of DGAC and PCC)	0
5+216	38805	Medium trucks	-	922	-	48	none	-	-	Average (of DGAC and PCC)	0
5+216	38805	Heavy trucks	-	121	-	48	none	-	-	Average (of DGAC and PCC)	0
5+216	38805	Buses	-	18	-	48	none	-	-	Average (of DGAC and PCC)	0
5+216	38805	Motorcycles	-	16	-	48	none	-	-	Average (of DGAC and PCC)	0
5+216	38805	Auxiliary Vehicle	-	-	-	48	none	-	-	Average (of DGAC and PCC)	0
6+006	-						-	-	-	-	-
0+000	*38805*	*Total*	-	*2587*	-	-	*none*	-	-	*Average (of DGAC and PCC)*	*0*
0+000	38805	Automobiles	-	1510	-	48	none	-	-	Average (of DGAC and PCC)	0
0+000	38805	Medium trucks	-	922	-	48	none	-	-	Average (of DGAC and PCC)	0
0+000	38805	Heavy trucks	-	121	-	48	none	-	-	Average (of DGAC and PCC)	0
0+000	38805	Buses	-	18	-	48	none	-	-	Average (of DGAC and PCC)	0
0+000	38805	Motorcycles	-	16	-	48	none	-	-	Average (of DGAC and PCC)	0
0+000	38805	Auxiliary Vehicle	-	-	-	48	none	-	-	Average (of DGAC and PCC)	0
Whitmore St	Traffic direction:	In entry direction									
4+911	*8010*	*Total*	-	*534*	-	-	*Traffic light*	*0*	*100*	*Average (of DGAC and PCC)*	*0*
4+911	8010	Automobiles	-	311	-	40	Traffic light	0	100	Average (of DGAC and PCC)	0
4+911	8010	Medium trucks	-	190	-	40	Traffic light	0	100	Average (of DGAC and PCC)	0
4+911	8010	Heavy trucks	-	25	-	40	Traffic light	0	100	Average (of DGAC and PCC)	0
4+911	8010	Buses	-	4	-	40	Traffic light	0	100	Average (of DGAC and PCC)	0
4+911	8010	Motorcycles	-	4	-	40	Traffic light	0	100	Average (of DGAC and PCC)	0
4+911	8010	Auxiliary Vehicle	-	-	-	40	Traffic light	0	100	Average (of DGAC and PCC)	0
5+219	-						-	-	-	-	-
0+000	*8010*	*Total*	-	*534*	-	-	*none*	-	-	*Average (of DGAC and PCC)*	*0*
0+000	8010	Automobiles	-	311	-	40	none	-	-	Average (of DGAC and PCC)	0
0+000	8010	Medium trucks	-	190	-	40	none	-	-	Average (of DGAC and PCC)	0
0+000	8010	Heavy trucks	-	25	-	40	none	-	-	Average (of DGAC and PCC)	0
0+000	8010	Buses	-	4	-	40	none	-	-	Average (of DGAC and PCC)	0
0+000	8010	Motorcycles	-	4	-	40	none	-	-	Average (of DGAC and PCC)	0
0+000	8010	Auxiliary Vehicle	-	-	-	40	none	-	-	Average (of DGAC and PCC)	0
Telstar Ave EB	Traffic direction:	In entry direction									
4+911	*36660*	*Total*	-	*2444*	-	-	*Traffic light*	*0*	*100*	*Average (of DGAC and PCC)*	*0*
4+911	36660	Automobiles	-	1426	-	56	Traffic light	0	100	Average (of DGAC and PCC)	0
4+911	36660	Medium trucks	-	871	-	56	Traffic light	0	100	Average (of DGAC and PCC)	0
4+911	36660	Heavy trucks	-	114	-	56	Traffic light	0	100	Average (of DGAC and PCC)	0
4+911	36660	Buses	-	17	-	56	Traffic light	0	100	Average (of DGAC and PCC)	0
4+911	36660	Motorcycles	-	16	-	56	Traffic light	0	100	Average (of DGAC and PCC)	0
4+911	36660	Auxiliary Vehicle	-	-	-	56	Traffic light	0	100	Average (of DGAC and PCC)	0
5+021	*36660*	*Total*	-	*2444*	-	-	*none*	-	-	*Average (of DGAC and PCC)*	*0*
5+021	36660	Automobiles	-	1426	-	56	none	-	-	Average (of DGAC and PCC)	0
5+021	36660	Medium trucks	-	871	-	56	none	-	-	Average (of DGAC and PCC)	0

5+021		36660	Heavy trucks	-		114	-		56	none	-	-	Average (of DGAC and PCC)	0
5+021		36660	Buses	-		17	-		56	none	-	-	Average (of DGAC and PCC)	0
5+021		36660	Motorcycles	-		16	-		56	none	-	-	Average (of DGAC and PCC)	0
5+021		36660	Auxiliary Vehicle	-	-	-			56	none	-	-	Average (of DGAC and PCC)	0
5+045		*36660*	*Total*	-		*2444*	-	-		*none*	-	-	*Average (of DGAC and PCC)*	*0*
5+045		36660	Automobiles	-		1426	-		56	none	-	-	Average (of DGAC and PCC)	0
5+045		36660	Medium trucks	-		871	-		56	none	-	-	Average (of DGAC and PCC)	0
5+045		36660	Heavy trucks	-		114	-		56	none	-	-	Average (of DGAC and PCC)	0
5+045		36660	Buses	-		17	-		56	none	-	-	Average (of DGAC and PCC)	0
5+045		36660	Motorcycles	-		16	-		56	none	-	-	Average (of DGAC and PCC)	0
5+045		36660	Auxiliary Vehicle	-	-	-			56	none	-	-	Average (of DGAC and PCC)	0
5+156		*27615*	*Total*	-		*1841*	-	-		*Traffic light*	*0*	-	*Average (of DGAC and PCC)*	*0*
5+156		27615	Automobiles	-		1074	-		56	Traffic light	0	-	Average (of DGAC and PCC)	0
5+156		27615	Medium trucks	-		656	-		56	Traffic light	0	-	Average (of DGAC and PCC)	0
5+156		27615	Heavy trucks	-		86	-		56	Traffic light	0	-	Average (of DGAC and PCC)	0
5+156		27615	Buses	-		13	-		56	Traffic light	0	-	Average (of DGAC and PCC)	0
5+156		27615	Motorcycles	-		12	-		56	Traffic light	0	-	Average (of DGAC and PCC)	0
5+156		27615	Auxiliary Vehicle	-	-	-			56	Traffic light	0	-	Average (of DGAC and PCC)	0
5+647		*8970*	*Total*	-		*598*	-	-		*none*	-	-	*Average (of DGAC and PCC)*	*0*
5+647		8970	Automobiles	-		349	-		56	none	-	-	Average (of DGAC and PCC)	0
5+647		8970	Medium trucks	-		213	-		56	none	-	-	Average (of DGAC and PCC)	0
5+647		8970	Heavy trucks	-		28	-		56	none	-	-	Average (of DGAC and PCC)	0
5+647		8970	Buses	-		4	-		56	none	-	-	Average (of DGAC and PCC)	0
5+647		8970	Motorcycles	-		4	-		56	none	-	-	Average (of DGAC and PCC)	0
5+647		8970	Auxiliary Vehicle	-	-	-			56	none	-	-	Average (of DGAC and PCC)	0
5+970		*8970*	*Total*	-		*598*	-	-		*none*	-	-	*Average (of DGAC and PCC)*	*0*
5+970		8970	Automobiles	-		349	-		56	none	-	-	Average (of DGAC and PCC)	0
5+970		8970	Medium trucks	-		213	-		56	none	-	-	Average (of DGAC and PCC)	0
5+970		8970	Heavy trucks	-		28	-		56	none	-	-	Average (of DGAC and PCC)	0
5+970		8970	Buses	-		4	-		56	none	-	-	Average (of DGAC and PCC)	0
5+970		8970	Motorcycles	-		4	-		56	none	-	-	Average (of DGAC and PCC)	0
5+970		8970	Auxiliary Vehicle	-	-	-			56	none	-	-	Average (of DGAC and PCC)	0
6+158		*7380*	*Total*	-		*492*	-	-		*none*	-	-	*Average (of DGAC and PCC)*	*0*
6+158		7380	Automobiles	-		286	-		56	none	-	-	Average (of DGAC and PCC)	0
6+158		7380	Medium trucks	-		175	-		56	none	-	-	Average (of DGAC and PCC)	0
6+158		7380	Heavy trucks	-		23	-		56	none	-	-	Average (of DGAC and PCC)	0
6+158		7380	Buses	-		4	-		56	none	-	-	Average (of DGAC and PCC)	0
6+158		7380	Motorcycles	-		4	-		56	none	-	-	Average (of DGAC and PCC)	0
6+158		7380	Auxiliary Vehicle	-	-	-			56	none	-	-	Average (of DGAC and PCC)	0
6+454		*7380*	*Total*	-		*492*	-	-		*none*	-	-	*Average (of DGAC and PCC)*	*0*
6+454		7380	Automobiles	-		286	-		56	none	-	-	Average (of DGAC and PCC)	0
6+454		7380	Medium trucks	-		175	-		56	none	-	-	Average (of DGAC and PCC)	0
6+454		7380	Heavy trucks	-		23	-		56	none	-	-	Average (of DGAC and PCC)	0
6+454		7380	Buses	-		4	-		56	none	-	-	Average (of DGAC and PCC)	0
6+454		7380	Motorcycles	-		4	-		56	none	-	-	Average (of DGAC and PCC)	0
6+454		7380	Auxiliary Vehicle	-	-	-			56	none	-	-	Average (of DGAC and PCC)	0
6+524		*7380*	*Total*	-		*492*	-	-		*none*	-	-	*Average (of DGAC and PCC)*	*0*
6+524		7380	Automobiles	-		286	-		56	none	-	-	Average (of DGAC and PCC)	0
6+524		7380	Medium trucks	-		175	-		56	none	-	-	Average (of DGAC and PCC)	0
6+524		7380	Heavy trucks	-		23	-		56	none	-	-	Average (of DGAC and PCC)	0
6+524		7380	Buses	-		4	-		56	none	-	-	Average (of DGAC and PCC)	0
6+524		7380	Motorcycles	-		4	-		56	none	-	-	Average (of DGAC and PCC)	0
6+524		7380	Auxiliary Vehicle	-	-	-			56	none	-	-	Average (of DGAC and PCC)	0
6+743	-									-	-	-	-	-
0+000	-									-	-	-	-	0
Telstar Ave WB		Traffic direction:	In entry direction											
4+911		*6735*	*Total*	-		*449*	-	-		*none*	-	-	*Average (of DGAC and PCC)*	*0*
4+911		6735	Automobiles	-		262	-		56	none	-	-	Average (of DGAC and PCC)	0

4+911	6735	Medium trucks	-	160	-	56	none	-	-	Average (of DGAC and PCC)	0
4+911	6735	Heavy trucks	-	21	-	56	none	-	-	Average (of DGAC and PCC)	0
4+911	6735	Buses	-	3	-	56	none	-	-	Average (of DGAC and PCC)	0
4+911	6735	Motorcycles	-	3	-	56	none	-	-	Average (of DGAC and PCC)	0
4+911	6735	Auxiliary Vehicle	-	-	-	56	none	-	-	Average (of DGAC and PCC)	0
5+047	*6735*	*Total*	-	*449*	-	-	*none*	-	-	*Average (of DGAC and PCC)*	*0*
5+047	6735	Automobiles	-	262	-	56	none	-	-	Average (of DGAC and PCC)	0
5+047	6735	Medium trucks	-	160	-	56	none	-	-	Average (of DGAC and PCC)	0
5+047	6735	Heavy trucks	-	21	-	56	none	-	-	Average (of DGAC and PCC)	0
5+047	6735	Buses	-	3	-	56	none	-	-	Average (of DGAC and PCC)	0
5+047	6735	Motorcycles	-	3	-	56	none	-	-	Average (of DGAC and PCC)	0
5+047	6735	Auxiliary Vehicle	-	-	-	56	none	-	-	Average (of DGAC and PCC)	0
5+190	*6735*	*Total*	-	*449*	-	-	*none*	-	-	*Average (of DGAC and PCC)*	*0*
5+190	6735	Automobiles	-	262	-	56	none	-	-	Average (of DGAC and PCC)	0
5+190	6735	Medium trucks	-	160	-	56	none	-	-	Average (of DGAC and PCC)	0
5+190	6735	Heavy trucks	-	21	-	56	none	-	-	Average (of DGAC and PCC)	0
5+190	6735	Buses	-	3	-	56	none	-	-	Average (of DGAC and PCC)	0
5+190	6735	Motorcycles	-	3	-	56	none	-	-	Average (of DGAC and PCC)	0
5+190	6735	Auxiliary Vehicle	-	-	-	56	none	-	-	Average (of DGAC and PCC)	0
5+492	*8520*	*Total*	-	*568*	-	-	*none*	-	-	*Average (of DGAC and PCC)*	*0*
5+492	8520	Automobiles	-	331	-	56	none	-	-	Average (of DGAC and PCC)	0
5+492	8520	Medium trucks	-	202	-	56	none	-	-	Average (of DGAC and PCC)	0
5+492	8520	Heavy trucks	-	27	-	56	none	-	-	Average (of DGAC and PCC)	0
5+492	8520	Buses	-	4	-	56	none	-	-	Average (of DGAC and PCC)	0
5+492	8520	Motorcycles	-	4	-	56	none	-	-	Average (of DGAC and PCC)	0
5+492	8520	Auxiliary Vehicle	-	-	-	56	none	-	-	Average (of DGAC and PCC)	0
5+670	*8520*	*Total*	-	*568*	-	-	*none*	-	-	*Average (of DGAC and PCC)*	*0*
5+670	8520	Automobiles	-	331	-	56	none	-	-	Average (of DGAC and PCC)	0
5+670	8520	Medium trucks	-	202	-	56	none	-	-	Average (of DGAC and PCC)	0
5+670	8520	Heavy trucks	-	27	-	56	none	-	-	Average (of DGAC and PCC)	0
5+670	8520	Buses	-	4	-	56	none	-	-	Average (of DGAC and PCC)	0
5+670	8520	Motorcycles	-	4	-	56	none	-	-	Average (of DGAC and PCC)	0
5+670	8520	Auxiliary Vehicle	-	-	-	56	none	-	-	Average (of DGAC and PCC)	0
5+986	*23760*	*Total*	-	*1584*	-	-	*none*	-	-	*Average (of DGAC and PCC)*	*0*
5+986	23760	Automobiles	-	924	-	56	none	-	-	Average (of DGAC and PCC)	0
5+986	23760	Medium trucks	-	565	-	56	none	-	-	Average (of DGAC and PCC)	0
5+986	23760	Heavy trucks	-	74	-	56	none	-	-	Average (of DGAC and PCC)	0
5+986	23760	Buses	-	11	-	56	none	-	-	Average (of DGAC and PCC)	0
5+986	23760	Motorcycles	-	10	-	56	none	-	-	Average (of DGAC and PCC)	0
5+986	23760	Auxiliary Vehicle	-	-	-	56	none	-	-	Average (of DGAC and PCC)	0
6+475	*35415*	*Total*	-	*2361*	-	-	*none*	-	-	*Average (of DGAC and PCC)*	*0*
6+475	35415	Automobiles	-	1378	-	56	none	-	-	Average (of DGAC and PCC)	0
6+475	35415	Medium trucks	-	841	-	56	none	-	-	Average (of DGAC and PCC)	0
6+475	35415	Heavy trucks	-	111	-	56	none	-	-	Average (of DGAC and PCC)	0
6+475	35415	Buses	-	16	-	56	none	-	-	Average (of DGAC and PCC)	0
6+475	35415	Motorcycles	-	15	-	56	none	-	-	Average (of DGAC and PCC)	0
6+475	35415	Auxiliary Vehicle	-	-	-	56	none	-	-	Average (of DGAC and PCC)	0
6+596	*35415*	*Total*	-	*2361*	-	-	*none*	-	-	*Average (of DGAC and PCC)*	*0*
6+596	35415	Automobiles	-	1378	-	56	none	-	-	Average (of DGAC and PCC)	0
6+596	35415	Medium trucks	-	841	-	56	none	-	-	Average (of DGAC and PCC)	0
6+596	35415	Heavy trucks	-	111	-	56	none	-	-	Average (of DGAC and PCC)	0
6+596	35415	Buses	-	16	-	56	none	-	-	Average (of DGAC and PCC)	0
6+596	35415	Motorcycles	-	15	-	56	none	-	-	Average (of DGAC and PCC)	0
6+596	35415	Auxiliary Vehicle	-	-	-	56	none	-	-	Average (of DGAC and PCC)	0
6+734	-						-	-	-	-	-
0+000	*35415*	*Total*	-	*2361*	-	-	*none*	-	-	*Average (of DGAC and PCC)*	*0*
0+000	35415	Automobiles	-	1378	-	56	none	-	-	Average (of DGAC and PCC)	0
0+000	35415	Medium trucks	-	841	-	56	none	-	-	Average (of DGAC and PCC)	0

0+000	35415	Heavy trucks	-	111	-	56	none	-	-	Average (of DGAC and PCC)	0
0+000	35415	Buses	-	16	-	56	none	-	-	Average (of DGAC and PCC)	0
0+000	35415	Motorcycles	-	15	-	56	none	-	-	Average (of DGAC and PCC)	0
0+000	35415	Auxiliary Vehicle	-	-	-	56	none	-	-	Average (of DGAC and PCC)	0
Aerojet Ave SB	Traffic direction:	In entry direction									
5+492	*12540*	*Total*	-	*836*	-	-	*none*	-	-	*Average (of DGAC and PCC)*	*0*
5+492	12540	Automobiles	-	487	-	40	none	-	-	Average (of DGAC and PCC)	0
5+492	12540	Medium trucks	-	298	-	40	none	-	-	Average (of DGAC and PCC)	0
5+492	12540	Heavy trucks	-	39	-	40	none	-	-	Average (of DGAC and PCC)	0
5+492	12540	Buses	-	6	-	40	none	-	-	Average (of DGAC and PCC)	0
5+492	12540	Motorcycles	-	6	-	40	none	-	-	Average (of DGAC and PCC)	0
5+492	12540	Auxiliary Vehicle	-	-	-	40	none	-	-	Average (of DGAC and PCC)	0
5+900	-						-	-	-	-	-
0+000	*2115*	*Total*	-	*141*	-	-	*none*	-	-	*Average (of DGAC and PCC)*	*0*
0+000	2115	Automobiles	-	82	-	40	none	-	-	Average (of DGAC and PCC)	0
0+000	2115	Medium trucks	-	50	-	40	none	-	-	Average (of DGAC and PCC)	0
0+000	2115	Heavy trucks	-	7	-	40	none	-	-	Average (of DGAC and PCC)	0
0+000	2115	Buses	-	1	-	40	none	-	-	Average (of DGAC and PCC)	0
0+000	2115	Motorcycles	-	1	-	40	none	-	-	Average (of DGAC and PCC)	0
0+000	2115	Auxiliary Vehicle	-	-	-	40	none	-	-	Average (of DGAC and PCC)	0
Aerojet Ave NB	Traffic direction:	In entry direction									
5+900	*12870*	*Total*	-	*858*	-	-	*none*	-	-	*Average (of DGAC and PCC)*	*0*
5+900	12870	Automobiles	-	500	-	40	none	-	-	Average (of DGAC and PCC)	0
5+900	12870	Medium trucks	-	306	-	40	none	-	-	Average (of DGAC and PCC)	0
5+900	12870	Heavy trucks	-	40	-	40	none	-	-	Average (of DGAC and PCC)	0
5+900	12870	Buses	-	6	-	40	none	-	-	Average (of DGAC and PCC)	0
5+900	12870	Motorcycles	-	6	-	40	none	-	-	Average (of DGAC and PCC)	0
5+900	12870	Auxiliary Vehicle	-	-	-	40	none	-	-	Average (of DGAC and PCC)	0
6+310	-						-	-	-	-	-
0+000	*19110*	*Total*	-	*1274*	-	-	*none*	-	-	*Average (of DGAC and PCC)*	*0*
0+000	19110	Automobiles	-	743	-	40	none	-	-	Average (of DGAC and PCC)	0
0+000	19110	Medium trucks	-	454	-	40	none	-	-	Average (of DGAC and PCC)	0
0+000	19110	Heavy trucks	-	60	-	40	none	-	-	Average (of DGAC and PCC)	0
0+000	19110	Buses	-	9	-	40	none	-	-	Average (of DGAC and PCC)	0
0+000	19110	Motorcycles	-	8	-	40	none	-	-	Average (of DGAC and PCC)	0
0+000	19110	Auxiliary Vehicle	-	-	-	40	none	-	-	Average (of DGAC and PCC)	0
Rio Hondo Ave SB	Traffic direction:	In entry direction									
5+900	*8430*	*Total*	-	*562*	-	-	*none*	-	-	*Average (of DGAC and PCC)*	*0*
5+900	8430	Automobiles	-	327	-	40	none	-	-	Average (of DGAC and PCC)	0
5+900	8430	Medium trucks	-	200	-	40	none	-	-	Average (of DGAC and PCC)	0
5+900	8430	Heavy trucks	-	27	-	40	none	-	-	Average (of DGAC and PCC)	0
5+900	8430	Buses	-	4	-	40	none	-	-	Average (of DGAC and PCC)	0
5+900	8430	Motorcycles	-	4	-	40	none	-	-	Average (of DGAC and PCC)	0
5+900	8430	Auxiliary Vehicle	-	-	-	40	none	-	-	Average (of DGAC and PCC)	0
6+326	-						-	-	-	-	-
0+000	*570*	*Total*	-	*38*	-	-	*none*	-	-	*Average (of DGAC and PCC)*	*0*
0+000	570	Automobiles	-	21	-	40	none	-	-	Average (of DGAC and PCC)	0
0+000	570	Medium trucks	-	13	-	40	none	-	-	Average (of DGAC and PCC)	0
0+000	570	Heavy trucks	-	2	-	40	none	-	-	Average (of DGAC and PCC)	0
0+000	570	Buses	-	1	-	40	none	-	-	Average (of DGAC and PCC)	0
0+000	570	Motorcycles	-	1	-	40	none	-	-	Average (of DGAC and PCC)	0
0+000	570	Auxiliary Vehicle	-	-	-	40	none	-	-	Average (of DGAC and PCC)	0
Rio Hondo Ave NB	Traffic direction:	In entry direction									
5+900	*20925*	*Total*	-	*1395*	-	-	*none*	-	-	*Average (of DGAC and PCC)*	*0*
5+900	20925	Automobiles	-	814	-	40	none	-	-	Average (of DGAC and PCC)	0
5+900	20925	Medium trucks	-	497	-	40	none	-	-	Average (of DGAC and PCC)	0
5+900	20925	Heavy trucks	-	65	-	40	none	-	-	Average (of DGAC and PCC)	0
5+900	20925	Buses	-	10	-	40	none	-	-	Average (of DGAC and PCC)	0

5+900		20925	Motorcycles	-		9	-		40	none	-	-	Average (of DGAC and PCC)	0
5+900		20925	Auxiliary Vehicle	-	-	-			40	none	-	-	Average (of DGAC and PCC)	0
6+319	-								-		-	-	-	-
0+000	-								-		-	-	-	0
Fletcher Ave SB	Traffic direction:	In entry direction												
6+319		*1485*	*Total*	-		*99*	-	-		*none*	-	-	*Average (of DGAC and PCC)*	*0*
6+319		1485	Automobiles	-		57	-		40	none	-	-	Average (of DGAC and PCC)	0
6+319		1485	Medium trucks	-		35	-		40	none	-	-	Average (of DGAC and PCC)	0
6+319		1485	Heavy trucks	-		5	-		40	none	-	-	Average (of DGAC and PCC)	0
6+319		1485	Buses	-		1	-		40	none	-	-	Average (of DGAC and PCC)	0
6+319		1485	Motorcycles	-		1	-		40	none	-	-	Average (of DGAC and PCC)	0
6+319		1485	Auxiliary Vehicle	-	-	-			40	none	-	-	Average (of DGAC and PCC)	0
6+700	-								-		-	-	-	-
0+000		*1080*	*Total*	-		*72*	-	-		*none*	-	-	*Average (of DGAC and PCC)*	*0*
0+000		1080	Automobiles	-		41	-		40	none	-	-	Average (of DGAC and PCC)	0
0+000		1080	Medium trucks	-		25	-		40	none	-	-	Average (of DGAC and PCC)	0
0+000		1080	Heavy trucks	-		4	-		40	none	-	-	Average (of DGAC and PCC)	0
0+000		1080	Buses	-		1	-		40	none	-	-	Average (of DGAC and PCC)	0
0+000		1080	Motorcycles	-		1	-		40	none	-	-	Average (of DGAC and PCC)	0
0+000		1080	Auxiliary Vehicle	-	-	-			40	none	-	-	Average (of DGAC and PCC)	0
Fletcher Ave NB	Traffic direction:	In entry direction												
6+319		*2160*	*Total*	-		*144*	-	-		*none*	-	-	*Average (of DGAC and PCC)*	*0*
6+319		2160	Automobiles	-		84	-		40	none	-	-	Average (of DGAC and PCC)	0
6+319		2160	Medium trucks	-		51	-		40	none	-	-	Average (of DGAC and PCC)	0
6+319		2160	Heavy trucks	-		7	-		40	none	-	-	Average (of DGAC and PCC)	0
6+319		2160	Buses	-		1	-		40	none	-	-	Average (of DGAC and PCC)	0
6+319		2160	Motorcycles	-		1	-		40	none	-	-	Average (of DGAC and PCC)	0
6+319		2160	Auxiliary Vehicle	-	-	-			40	none	-	-	Average (of DGAC and PCC)	0
6+694	-								-		-	-	-	-
0+000	-								-		-	-	-	0
Flair Dr EB	Traffic direction:	In entry direction												
6+319		*14445*	*Total*	-		*963*	-	-		*none*	-	-	*Average (of DGAC and PCC)*	*0*
6+319		14445	Automobiles	-		562	-		40	none	-	-	Average (of DGAC and PCC)	0
6+319		14445	Medium trucks	-		343	-		40	none	-	-	Average (of DGAC and PCC)	0
6+319		14445	Heavy trucks	-		45	-		40	none	-	-	Average (of DGAC and PCC)	0
6+319		14445	Buses	-		7	-		40	none	-	-	Average (of DGAC and PCC)	0
6+319		14445	Motorcycles	-		6	-		40	none	-	-	Average (of DGAC and PCC)	0
6+319		14445	Auxiliary Vehicle	-	-	-			40	none	-	-	Average (of DGAC and PCC)	0
6+832		*16290*	*Total*	-		*1086*	-	-		*none*	-	-	*Average (of DGAC and PCC)*	*0*
6+832		16290	Automobiles	-		633	-		40	none	-	-	Average (of DGAC and PCC)	0
6+832		16290	Medium trucks	-		387	-		40	none	-	-	Average (of DGAC and PCC)	0
6+832		16290	Heavy trucks	-		51	-		40	none	-	-	Average (of DGAC and PCC)	0
6+832		16290	Buses	-		8	-		40	none	-	-	Average (of DGAC and PCC)	0
6+832		16290	Motorcycles	-		7	-		40	none	-	-	Average (of DGAC and PCC)	0
6+832		16290	Auxiliary Vehicle	-	-	-			40	none	-	-	Average (of DGAC and PCC)	0
7+320		*15075*	*Total*	-		*1005*	-	-		*none*	-	-	*Average (of DGAC and PCC)*	*0*
7+320		15075	Automobiles	-		586	-		40	none	-	-	Average (of DGAC and PCC)	0
7+320		15075	Medium trucks	-		358	-		40	none	-	-	Average (of DGAC and PCC)	0
7+320		15075	Heavy trucks	-		47	-		40	none	-	-	Average (of DGAC and PCC)	0
7+320		15075	Buses	-		7	-		40	none	-	-	Average (of DGAC and PCC)	0
7+320		15075	Motorcycles	-		7	-		40	none	-	-	Average (of DGAC and PCC)	0
7+320		15075	Auxiliary Vehicle	-	-	-			40	none	-	-	Average (of DGAC and PCC)	0
7+670		*20970*	*Total*	-		*1398*	-	-		*none*	-	-	*Average (of DGAC and PCC)*	*0*
7+670		20970	Automobiles	-		815	-		40	none	-	-	Average (of DGAC and PCC)	0
7+670		20970	Medium trucks	-		498	-		40	none	-	-	Average (of DGAC and PCC)	0
7+670		20970	Heavy trucks	-		66	-		40	none	-	-	Average (of DGAC and PCC)	0
7+670		20970	Buses	-		10	-		40	none	-	-	Average (of DGAC and PCC)	0
7+670		20970	Motorcycles	-		9	-		40	none	-	-	Average (of DGAC and PCC)	0

7+670	20970	Auxiliary Vehicle	-	-	-	40	none	-	-	Average (of DGAC and PCC)		0
8+052	-					-		-	-	-	-	
0+000	-					-		-	-	-		0
Flair Dr WB	Traffic direction:	In entry direction										
6+319	*23355*	*Total*	-	*1557*	-	-	*none*	-	-	*Average (of DGAC and PCC)*		*0*
6+319	23355	Automobiles	-	908	-	40	none	-	-	Average (of DGAC and PCC)		0
6+319	23355	Medium trucks	-	555	-	40	none	-	-	Average (of DGAC and PCC)		0
6+319	23355	Heavy trucks	-	73	-	40	none	-	-	Average (of DGAC and PCC)		0
6+319	23355	Buses	-	11	-	40	none	-	-	Average (of DGAC and PCC)		0
6+319	23355	Motorcycles	-	10	-	40	none	-	-	Average (of DGAC and PCC)		0
6+319	23355	Auxiliary Vehicle	-	-	-	40	none	-	-	Average (of DGAC and PCC)		0
6+700	*15585*	*Total*	-	*1039*	-	-	*none*	-	-	*Average (of DGAC and PCC)*		*0*
6+700	15585	Automobiles	-	606	-	40	none	-	-	Average (of DGAC and PCC)		0
6+700	15585	Medium trucks	-	370	-	40	none	-	-	Average (of DGAC and PCC)		0
6+700	15585	Heavy trucks	-	49	-	40	none	-	-	Average (of DGAC and PCC)		0
6+700	15585	Buses	-	7	-	40	none	-	-	Average (of DGAC and PCC)		0
6+700	15585	Motorcycles	-	7	-	40	none	-	-	Average (of DGAC and PCC)		0
6+700	15585	Auxiliary Vehicle	-	-	-	40	none	-	-	Average (of DGAC and PCC)		0
7+045	*14880*	*Total*	-	*992*	-	-	*none*	-	-	*Average (of DGAC and PCC)*		*0*
7+045	14880	Automobiles	-	578	-	40	none	-	-	Average (of DGAC and PCC)		0
7+045	14880	Medium trucks	-	353	-	40	none	-	-	Average (of DGAC and PCC)		0
7+045	14880	Heavy trucks	-	47	-	40	none	-	-	Average (of DGAC and PCC)		0
7+045	14880	Buses	-	7	-	40	none	-	-	Average (of DGAC and PCC)		0
7+045	14880	Motorcycles	-	7	-	40	none	-	-	Average (of DGAC and PCC)		0
7+045	14880	Auxiliary Vehicle	-	-	-	40	none	-	-	Average (of DGAC and PCC)		0
7+523	*12225*	*Total*	-	*815*	-	-	*none*	-	-	*Average (of DGAC and PCC)*		*0*
7+523	12225	Automobiles	-	475	-	40	none	-	-	Average (of DGAC and PCC)		0
7+523	12225	Medium trucks	-	290	-	40	none	-	-	Average (of DGAC and PCC)		0
7+523	12225	Heavy trucks	-	38	-	40	none	-	-	Average (of DGAC and PCC)		0
7+523	12225	Buses	-	6	-	40	none	-	-	Average (of DGAC and PCC)		0
7+523	12225	Motorcycles	-	6	-	40	none	-	-	Average (of DGAC and PCC)		0
7+523	12225	Auxiliary Vehicle	-	-	-	40	none	-	-	Average (of DGAC and PCC)		0
8+048	-					-		-	-	-	-	
0+000	*5070*	*Total*	-	*338*	-	-	*none*	-	-	*Average (of DGAC and PCC)*		*0*
0+000	5070	Automobiles	-	196	-	40	none	-	-	Average (of DGAC and PCC)		0
0+000	5070	Medium trucks	-	120	-	40	none	-	-	Average (of DGAC and PCC)		0
0+000	5070	Heavy trucks	-	16	-	40	none	-	-	Average (of DGAC and PCC)		0
0+000	5070	Buses	-	3	-	40	none	-	-	Average (of DGAC and PCC)		0
0+000	5070	Motorcycles	-	3	-	40	none	-	-	Average (of DGAC and PCC)		0
0+000	5070	Auxiliary Vehicle	-	-	-	40	none	-	-	Average (of DGAC and PCC)		0
Baldwin Ave SB	Traffic direction:	In entry direction										
6+319	*40500*	*Total*	-	*2700*	-	-	*none*	-	-	*Average (of DGAC and PCC)*		*0*
6+319	40500	Automobiles	-	1576	-	56	none	-	-	Average (of DGAC and PCC)		0
6+319	40500	Medium trucks	-	963	-	56	none	-	-	Average (of DGAC and PCC)		0
6+319	40500	Heavy trucks	-	126	-	56	none	-	-	Average (of DGAC and PCC)		0
6+319	40500	Buses	-	18	-	56	none	-	-	Average (of DGAC and PCC)		0
6+319	40500	Motorcycles	-	17	-	56	none	-	-	Average (of DGAC and PCC)		0
6+319	40500	Auxiliary Vehicle	-	-	-	56	none	-	-	Average (of DGAC and PCC)		0
6+847	*40500*	*Total*	-	*2700*	-	-	*Traffic light*	*0*	-	*Average (of DGAC and PCC)*		*0*
6+847	40500	Automobiles	-	1576	-	56	Traffic light	0	-	Average (of DGAC and PCC)		0
6+847	40500	Medium trucks	-	963	-	56	Traffic light	0	-	Average (of DGAC and PCC)		0
6+847	40500	Heavy trucks	-	126	-	56	Traffic light	0	-	Average (of DGAC and PCC)		0
6+847	40500	Buses	-	18	-	56	Traffic light	0	-	Average (of DGAC and PCC)		0
6+847	40500	Motorcycles	-	17	-	56	Traffic light	0	-	Average (of DGAC and PCC)		0
6+847	40500	Auxiliary Vehicle	-	-	-	56	Traffic light	0	-	Average (of DGAC and PCC)		0
7+957	*40500*	*Total*	-	*2700*	-	-	*none*	-	-	*Average (of DGAC and PCC)*		*0*
7+957	40500	Automobiles	-	1576	-	56	none	-	-	Average (of DGAC and PCC)		0
7+957	40500	Medium trucks	-	963	-	56	none	-	-	Average (of DGAC and PCC)		0

7+957		40500	Heavy trucks	-		126	-		56	none	-	-	Average (of DGAC and PCC)	0
7+957		40500	Buses	-		18	-		56	none	-	-	Average (of DGAC and PCC)	0
7+957		40500	Motorcycles	-		17	-		56	none	-	-	Average (of DGAC and PCC)	0
7+957		40500	Auxiliary Vehicle	-	-	-			56	none	-	-	Average (of DGAC and PCC)	0
8+011		*40500*	*Total*	-		*2700*	-	-		*none*	-	-	*Average (of DGAC and PCC)*	*0*
8+011		40500	Automobiles	-		1576	-		56	none	-	-	Average (of DGAC and PCC)	0
8+011		40500	Medium trucks	-		963	-		56	none	-	-	Average (of DGAC and PCC)	0
8+011		40500	Heavy trucks	-		126	-		56	none	-	-	Average (of DGAC and PCC)	0
8+011		40500	Buses	-		18	-		56	none	-	-	Average (of DGAC and PCC)	0
8+011		40500	Motorcycles	-		17	-		56	none	-	-	Average (of DGAC and PCC)	0
8+011		40500	Auxiliary Vehicle	-	-	-			56	none	-	-	Average (of DGAC and PCC)	0
8+175		*33285*	*Total*	-		*2219*	-	-		*Traffic light*	*0*	-	*Average (of DGAC and PCC)*	*0*
8+175		33285	Automobiles	-		1295	-		56	Traffic light	0	-	Average (of DGAC and PCC)	0
8+175		33285	Medium trucks	-		791	-		56	Traffic light	0	-	Average (of DGAC and PCC)	0
8+175		33285	Heavy trucks	-		104	-		56	Traffic light	0	-	Average (of DGAC and PCC)	0
8+175		33285	Buses	-		15	-		56	Traffic light	0	-	Average (of DGAC and PCC)	0
8+175		33285	Motorcycles	-		14	-		56	Traffic light	0	-	Average (of DGAC and PCC)	0
8+175		33285	Auxiliary Vehicle	-	-	-			56	Traffic light	0	-	Average (of DGAC and PCC)	0
8+855		*33285*	*Total*	-		*2219*	-	-		*none*	-	-	*Average (of DGAC and PCC)*	*0*
8+855		33285	Automobiles	-		1295	-		56	none	-	-	Average (of DGAC and PCC)	0
8+855		33285	Medium trucks	-		791	-		56	none	-	-	Average (of DGAC and PCC)	0
8+855		33285	Heavy trucks	-		104	-		56	none	-	-	Average (of DGAC and PCC)	0
8+855		33285	Buses	-		15	-		56	none	-	-	Average (of DGAC and PCC)	0
8+855		33285	Motorcycles	-		14	-		56	none	-	-	Average (of DGAC and PCC)	0
8+855		33285	Auxiliary Vehicle	-	-	-			56	none	-	-	Average (of DGAC and PCC)	0
9+025		*33285*	*Total*	-		*2219*	-	-		*none*	-	-	*Average (of DGAC and PCC)*	*0*
9+025		33285	Automobiles	-		1295	-		56	none	-	-	Average (of DGAC and PCC)	0
9+025		33285	Medium trucks	-		791	-		56	none	-	-	Average (of DGAC and PCC)	0
9+025		33285	Heavy trucks	-		104	-		56	none	-	-	Average (of DGAC and PCC)	0
9+025		33285	Buses	-		15	-		56	none	-	-	Average (of DGAC and PCC)	0
9+025		33285	Motorcycles	-		14	-		56	none	-	-	Average (of DGAC and PCC)	0
9+025		33285	Auxiliary Vehicle	-	-	-			56	none	-	-	Average (of DGAC and PCC)	0
9+803		*37005*	*Total*	-		*2467*	-	-		*Traffic light*	*0*	-	*Average (of DGAC and PCC)*	*0*
9+803		37005	Automobiles	-		1440	-		56	Traffic light	0	-	Average (of DGAC and PCC)	0
9+803		37005	Medium trucks	-		879	-		56	Traffic light	0	-	Average (of DGAC and PCC)	0
9+803		37005	Heavy trucks	-		115	-		56	Traffic light	0	-	Average (of DGAC and PCC)	0
9+803		37005	Buses	-		17	-		56	Traffic light	0	-	Average (of DGAC and PCC)	0
9+803		37005	Motorcycles	-		16	-		56	Traffic light	0	-	Average (of DGAC and PCC)	0
9+803		37005	Auxiliary Vehicle	-	-	-			56	Traffic light	0	-	Average (of DGAC and PCC)	0
10+141		*37005*	*Total*	-		*2467*	-	-		*none*	-	-	*Average (of DGAC and PCC)*	*0*
10+141		37005	Automobiles	-		1440	-		56	none	-	-	Average (of DGAC and PCC)	0
10+141		37005	Medium trucks	-		879	-		56	none	-	-	Average (of DGAC and PCC)	0
10+141		37005	Heavy trucks	-		115	-		56	none	-	-	Average (of DGAC and PCC)	0
10+141		37005	Buses	-		17	-		56	none	-	-	Average (of DGAC and PCC)	0
10+141		37005	Motorcycles	-		16	-		56	none	-	-	Average (of DGAC and PCC)	0
10+141		37005	Auxiliary Vehicle	-	-	-			56	none	-	-	Average (of DGAC and PCC)	0
10+389		*44070*	*Total*	-		*2938*	-	-		*Traffic light*	*0*	-	*Average (of DGAC and PCC)*	*0*
10+389		44070	Automobiles	-		1715	-		56	Traffic light	0	-	Average (of DGAC and PCC)	0
10+389		44070	Medium trucks	-		1047	-		56	Traffic light	0	-	Average (of DGAC and PCC)	0
10+389		44070	Heavy trucks	-		137	-		56	Traffic light	0	-	Average (of DGAC and PCC)	0
10+389		44070	Buses	-		20	-		56	Traffic light	0	-	Average (of DGAC and PCC)	0
10+389		44070	Motorcycles	-		19	-		56	Traffic light	0	-	Average (of DGAC and PCC)	0
10+389		44070	Auxiliary Vehicle	-	-	-			56	Traffic light	0	-	Average (of DGAC and PCC)	0
10+780	-								-		-	-	-	-
0+000		*36870*	*Total*	-		*2458*	-	-		*Traffic light*	*0*	-	*Average (of DGAC and PCC)*	*0*
0+000		36870	Automobiles	-		1434	-		56	Traffic light	0	-	Average (of DGAC and PCC)	0
0+000		36870	Medium trucks	-		876	-		56	Traffic light	0	-	Average (of DGAC and PCC)	0
0+000		36870	Heavy trucks	-		115	-		56	Traffic light	0	-	Average (of DGAC and PCC)	0

0+000	36870	Buses	-		17	-		56	Traffic light	0	-	Average (of DGAC and PCC)	0
0+000	36870	Motorcycles	-		16	-		56	Traffic light	0	-	Average (of DGAC and PCC)	0
0+000	36870	Auxiliary Vehicle	-	-	-			56	Traffic light	0	-	Average (of DGAC and PCC)	0
Baldwin Ave NB	Traffic direction:	In entry direction											
10+389	*44250*	*Total*	-		*2950*	-	-		*Traffic light*	*0*	-	*Average (of DGAC and PCC)*	*0*
10+389	44250	Automobiles	-		1722	-		56	Traffic light	0	-	Average (of DGAC and PCC)	0
10+389	44250	Medium trucks	-		1051	-		56	Traffic light	0	-	Average (of DGAC and PCC)	0
10+389	44250	Heavy trucks	-		138	-		56	Traffic light	0	-	Average (of DGAC and PCC)	0
10+389	44250	Buses	-		20	-		56	Traffic light	0	-	Average (of DGAC and PCC)	0
10+389	44250	Motorcycles	-		19	-		56	Traffic light	0	-	Average (of DGAC and PCC)	0
10+389	44250	Auxiliary Vehicle	-	-	-			56	Traffic light	0	-	Average (of DGAC and PCC)	0
10+776	*35850*	*Total*	-		*2390*	-	-		*none*	-	-	*Average (of DGAC and PCC)*	*0*
10+776	35850	Automobiles	-		1395	-		40	none	-	-	Average (of DGAC and PCC)	0
10+776	35850	Medium trucks	-		852	-		40	none	-	-	Average (of DGAC and PCC)	0
10+776	35850	Heavy trucks	-		112	-		40	none	-	-	Average (of DGAC and PCC)	0
10+776	35850	Buses	-		16	-		40	none	-	-	Average (of DGAC and PCC)	0
10+776	35850	Motorcycles	-		15	-		40	none	-	-	Average (of DGAC and PCC)	0
10+776	35850	Auxiliary Vehicle	-	-	-			40	none	-	-	Average (of DGAC and PCC)	0
11+023	*35850*	*Total*	-		*2390*	-	-		*none*	-	-	*Average (of DGAC and PCC)*	*0*
11+023	35850	Automobiles	-		1395	-		56	none	-	-	Average (of DGAC and PCC)	0
11+023	35850	Medium trucks	-		852	-		56	none	-	-	Average (of DGAC and PCC)	0
11+023	35850	Heavy trucks	-		112	-		56	none	-	-	Average (of DGAC and PCC)	0
11+023	35850	Buses	-		16	-		56	none	-	-	Average (of DGAC and PCC)	0
11+023	35850	Motorcycles	-		15	-		56	none	-	-	Average (of DGAC and PCC)	0
11+023	35850	Auxiliary Vehicle	-	-	-			56	none	-	-	Average (of DGAC and PCC)	0
11+338	*33240*	*Total*	-		*2216*	-	-		*Traffic light*	*0*	-	*Average (of DGAC and PCC)*	*0*
11+338	33240	Automobiles	-		1293	-		56	Traffic light	0	-	Average (of DGAC and PCC)	0
11+338	33240	Medium trucks	-		790	-		56	Traffic light	0	-	Average (of DGAC and PCC)	0
11+338	33240	Heavy trucks	-		104	-		56	Traffic light	0	-	Average (of DGAC and PCC)	0
11+338	33240	Buses	-		15	-		56	Traffic light	0	-	Average (of DGAC and PCC)	0
11+338	33240	Motorcycles	-		14	-		56	Traffic light	0	-	Average (of DGAC and PCC)	0
11+338	33240	Auxiliary Vehicle	-	-	-			56	Traffic light	0	-	Average (of DGAC and PCC)	0
12+138	*33240*	*Total*	-		*2216*	-	-		*none*	-	-	*Average (of DGAC and PCC)*	*0*
12+138	33240	Automobiles	-		1293	-		56	none	-	-	Average (of DGAC and PCC)	0
12+138	33240	Medium trucks	-		790	-		56	none	-	-	Average (of DGAC and PCC)	0
12+138	33240	Heavy trucks	-		104	-		56	none	-	-	Average (of DGAC and PCC)	0
12+138	33240	Buses	-		15	-		56	none	-	-	Average (of DGAC and PCC)	0
12+138	33240	Motorcycles	-		14	-		56	none	-	-	Average (of DGAC and PCC)	0
12+138	33240	Auxiliary Vehicle	-	-	-			56	none	-	-	Average (of DGAC and PCC)	0
12+310	*33240*	*Total*	-		*2216*	-	-		*none*	-	-	*Average (of DGAC and PCC)*	*0*
12+310	33240	Automobiles	-		1293	-		56	none	-	-	Average (of DGAC and PCC)	0
12+310	33240	Medium trucks	-		790	-		56	none	-	-	Average (of DGAC and PCC)	0
12+310	33240	Heavy trucks	-		104	-		56	none	-	-	Average (of DGAC and PCC)	0
12+310	33240	Buses	-		15	-		56	none	-	-	Average (of DGAC and PCC)	0
12+310	33240	Motorcycles	-		14	-		56	none	-	-	Average (of DGAC and PCC)	0
12+310	33240	Auxiliary Vehicle	-	-	-			56	none	-	-	Average (of DGAC and PCC)	0
13+023	*36135*	*Total*	-		*2409*	-	-		*Traffic light*	*0*	-	*Average (of DGAC and PCC)*	*0*
13+023	36135	Automobiles	-		1406	-		56	Traffic light	0	-	Average (of DGAC and PCC)	0
13+023	36135	Medium trucks	-		859	-		56	Traffic light	0	-	Average (of DGAC and PCC)	0
13+023	36135	Heavy trucks	-		113	-		56	Traffic light	0	-	Average (of DGAC and PCC)	0
13+023	36135	Buses	-		16	-		56	Traffic light	0	-	Average (of DGAC and PCC)	0
13+023	36135	Motorcycles	-		15	-		56	Traffic light	0	-	Average (of DGAC and PCC)	0
13+023	36135	Auxiliary Vehicle	-	-	-			56	Traffic light	0	-	Average (of DGAC and PCC)	0
13+151	*36135*	*Total*	-		*2409*	-	-		*none*	-	-	*Average (of DGAC and PCC)*	*0*
13+151	36135	Automobiles	-		1406	-		56	none	-	-	Average (of DGAC and PCC)	0
13+151	36135	Medium trucks	-		859	-		56	none	-	-	Average (of DGAC and PCC)	0
13+151	36135	Heavy trucks	-		113	-		56	none	-	-	Average (of DGAC and PCC)	0
13+151	36135	Buses	-		16	-		56	none	-	-	Average (of DGAC and PCC)	0

13+151		36135	Motorcycles	-		15	-		56	none	-	-	Average (of DGAC and PCC)	0
13+151		36135	Auxiliary Vehicle	-	-	-			56	none	-	-	Average (of DGAC and PCC)	0
14+319		*28350*	*Total*	-		*1890*	-	-		*Traffic light*	*0*	-	*Average (of DGAC and PCC)*	*0*
14+319		28350	Automobiles	-		1103	-		56	Traffic light	0	-	Average (of DGAC and PCC)	0
14+319		28350	Medium trucks	-		673	-		56	Traffic light	0	-	Average (of DGAC and PCC)	0
14+319		28350	Heavy trucks	-		89	-		56	Traffic light	0	-	Average (of DGAC and PCC)	0
14+319		28350	Buses	-		13	-		56	Traffic light	0	-	Average (of DGAC and PCC)	0
14+319		28350	Motorcycles	-		12	-		56	Traffic light	0	-	Average (of DGAC and PCC)	0
14+319		28350	Auxiliary Vehicle	-	-	-			56	Traffic light	0	-	Average (of DGAC and PCC)	0
14+849	-									-	-	-	-	-
0+000		*28350*	*Total*	-		*1890*	-	-		*none*	-	-	*Average (of DGAC and PCC)*	*0*
0+000		28350	Automobiles	-		1103	-		56	none	-	-	Average (of DGAC and PCC)	0
0+000		28350	Medium trucks	-		673	-		56	none	-	-	Average (of DGAC and PCC)	0
0+000		28350	Heavy trucks	-		89	-		56	none	-	-	Average (of DGAC and PCC)	0
0+000		28350	Buses	-		13	-		56	none	-	-	Average (of DGAC and PCC)	0
0+000		28350	Motorcycles	-		12	-		56	none	-	-	Average (of DGAC and PCC)	0
0+000		28350	Auxiliary Vehicle	-	-	-			56	none	-	-	Average (of DGAC and PCC)	0
Olive St EB	Traffic direction:	In entry direction												
8+855		*5115*	*Total*	-		*341*	-	-		*none*	-	-	*Average (of DGAC and PCC)*	*0*
8+855		5115	Automobiles	-		198	-		40	none	-	-	Average (of DGAC and PCC)	0
8+855		5115	Medium trucks	-		121	-		40	none	-	-	Average (of DGAC and PCC)	0
8+855		5115	Heavy trucks	-		16	-		40	none	-	-	Average (of DGAC and PCC)	0
8+855		5115	Buses	-		3	-		40	none	-	-	Average (of DGAC and PCC)	0
8+855		5115	Motorcycles	-		3	-		40	none	-	-	Average (of DGAC and PCC)	0
8+855		5115	Auxiliary Vehicle	-	-	-			40	none	-	-	Average (of DGAC and PCC)	0
9+518		*5115*	*Total*	-		*341*	-	-		*Traffic light*	*0*	-	*Average (of DGAC and PCC)*	*0*
9+518		5115	Automobiles	-		198	-		40	Traffic light	0	-	Average (of DGAC and PCC)	0
9+518		5115	Medium trucks	-		121	-		40	Traffic light	0	-	Average (of DGAC and PCC)	0
9+518		5115	Heavy trucks	-		16	-		40	Traffic light	0	-	Average (of DGAC and PCC)	0
9+518		5115	Buses	-		3	-		40	Traffic light	0	-	Average (of DGAC and PCC)	0
9+518		5115	Motorcycles	-		3	-		40	Traffic light	0	-	Average (of DGAC and PCC)	0
9+518		5115	Auxiliary Vehicle	-	-	-			40	Traffic light	0	-	Average (of DGAC and PCC)	0
10+058	-									-	-	-	-	-
0+000		*5115*	*Total*	-		*341*	-	-		*none*	-	-	*Average (of DGAC and PCC)*	*0*
0+000		5115	Automobiles	-		198	-		40	none	-	-	Average (of DGAC and PCC)	0
0+000		5115	Medium trucks	-		121	-		40	none	-	-	Average (of DGAC and PCC)	0
0+000		5115	Heavy trucks	-		16	-		40	none	-	-	Average (of DGAC and PCC)	0
0+000		5115	Buses	-		3	-		40	none	-	-	Average (of DGAC and PCC)	0
0+000		5115	Motorcycles	-		3	-		40	none	-	-	Average (of DGAC and PCC)	0
0+000		5115	Auxiliary Vehicle	-	-	-			40	none	-	-	Average (of DGAC and PCC)	0
Olive St WB	Traffic direction:	In entry direction												
8+855		*4650*	*Total*	-		*310*	-	-		*none*	-	-	*Average (of DGAC and PCC)*	*0*
8+855		4650	Automobiles	-		180	-		40	none	-	-	Average (of DGAC and PCC)	0
8+855		4650	Medium trucks	-		110	-		40	none	-	-	Average (of DGAC and PCC)	0
8+855		4650	Heavy trucks	-		15	-		40	none	-	-	Average (of DGAC and PCC)	0
8+855		4650	Buses	-		3	-		40	none	-	-	Average (of DGAC and PCC)	0
8+855		4650	Motorcycles	-		2	-		40	none	-	-	Average (of DGAC and PCC)	0
8+855		4650	Auxiliary Vehicle	-	-	-			40	none	-	-	Average (of DGAC and PCC)	0
9+385		*4650*	*Total*	-		*310*	-	-		*Traffic light*	*0*	-	*Average (of DGAC and PCC)*	*0*
9+385		4650	Automobiles	-		180	-		40	Traffic light	0	-	Average (of DGAC and PCC)	0
9+385		4650	Medium trucks	-		110	-		40	Traffic light	0	-	Average (of DGAC and PCC)	0
9+385		4650	Heavy trucks	-		15	-		40	Traffic light	0	-	Average (of DGAC and PCC)	0
9+385		4650	Buses	-		3	-		40	Traffic light	0	-	Average (of DGAC and PCC)	0
9+385		4650	Motorcycles	-		2	-		40	Traffic light	0	-	Average (of DGAC and PCC)	0
9+385		4650	Auxiliary Vehicle	-	-	-			40	Traffic light	0	-	Average (of DGAC and PCC)	0
10+062	-									-	-	-	-	-
0+000		*4650*	*Total*	-		*310*	-	-		*none*	-	-	*Average (of DGAC and PCC)*	*0*
0+000		4650	Automobiles	-		180	-		40	none	-	-	Average (of DGAC and PCC)	0

0+000	4650	Medium trucks	-		110	-		40	none	-	-	Average (of DGAC and PCC)	0
0+000	4650	Heavy trucks	-		15	-		40	none	-	-	Average (of DGAC and PCC)	0
0+000	4650	Buses	-		3	-		40	none	-	-	Average (of DGAC and PCC)	0
0+000	4650	Motorcycles	-		2	-		40	none	-	-	Average (of DGAC and PCC)	0
0+000	4650	Auxiliary Vehicle	-	-	-			40	none	-	-	Average (of DGAC and PCC)	0
Lower Azusa Rd EB	Traffic direction:	In entry direction											
8+855	*23805*	*Total*	-		*1587*	-	-		*none*	-	-	*Average (of DGAC and PCC)*	*0*
8+855	23805	Automobiles	-		926	-		56	none	-	-	Average (of DGAC and PCC)	0
8+855	23805	Medium trucks	-		566	-		56	none	-	-	Average (of DGAC and PCC)	0
8+855	23805	Heavy trucks	-		74	-		56	none	-	-	Average (of DGAC and PCC)	0
8+855	23805	Buses	-		11	-		56	none	-	-	Average (of DGAC and PCC)	0
8+855	23805	Motorcycles	-		10	-		56	none	-	-	Average (of DGAC and PCC)	0
8+855	23805	Auxiliary Vehicle	-	-	-			56	none	-	-	Average (of DGAC and PCC)	0
8+995	*23805*	*Total*	-		*1587*	-	-		*Traffic light*	*0*	-	*Average (of DGAC and PCC)*	*0*
8+995	23805	Automobiles	-		926	-		56	Traffic light	0	-	Average (of DGAC and PCC)	0
8+995	23805	Medium trucks	-		566	-		56	Traffic light	0	-	Average (of DGAC and PCC)	0
8+995	23805	Heavy trucks	-		74	-		56	Traffic light	0	-	Average (of DGAC and PCC)	0
8+995	23805	Buses	-		11	-		56	Traffic light	0	-	Average (of DGAC and PCC)	0
8+995	23805	Motorcycles	-		10	-		56	Traffic light	0	-	Average (of DGAC and PCC)	0
8+995	23805	Auxiliary Vehicle	-	-	-			56	Traffic light	0	-	Average (of DGAC and PCC)	0
10+849	*30060*	*Total*	-		*2004*	-	-		*Traffic light*	*0*	-	*Average (of DGAC and PCC)*	*0*
10+849	30060	Automobiles	-		1169	-		56	Traffic light	0	-	Average (of DGAC and PCC)	0
10+849	30060	Medium trucks	-		714	-		56	Traffic light	0	-	Average (of DGAC and PCC)	0
10+849	30060	Heavy trucks	-		94	-		56	Traffic light	0	-	Average (of DGAC and PCC)	0
10+849	30060	Buses	-		14	-		56	Traffic light	0	-	Average (of DGAC and PCC)	0
10+849	30060	Motorcycles	-		13	-		56	Traffic light	0	-	Average (of DGAC and PCC)	0
10+849	30060	Auxiliary Vehicle	-	-	-			56	Traffic light	0	-	Average (of DGAC and PCC)	0
11+858	*37155*	*Total*	-		*2477*	-	-		*Traffic light*	*0*	-	*Average (of DGAC and PCC)*	*0*
11+858	37155	Automobiles	-		1445	-		56	Traffic light	0	-	Average (of DGAC and PCC)	0
11+858	37155	Medium trucks	-		883	-		56	Traffic light	0	-	Average (of DGAC and PCC)	0
11+858	37155	Heavy trucks	-		116	-		56	Traffic light	0	-	Average (of DGAC and PCC)	0
11+858	37155	Buses	-		17	-		56	Traffic light	0	-	Average (of DGAC and PCC)	0
11+858	37155	Motorcycles	-		16	-		56	Traffic light	0	-	Average (of DGAC and PCC)	0
11+858	37155	Auxiliary Vehicle	-	-	-			56	Traffic light	0	-	Average (of DGAC and PCC)	0
13+557	*37155*	*Total*	-		*2477*	-	-		*none*	-	-	*Average (of DGAC and PCC)*	*0*
13+557	37155	Automobiles	-		1445	-		56	none	-	-	Average (of DGAC and PCC)	0
13+557	37155	Medium trucks	-		883	-		56	none	-	-	Average (of DGAC and PCC)	0
13+557	37155	Heavy trucks	-		116	-		56	none	-	-	Average (of DGAC and PCC)	0
13+557	37155	Buses	-		17	-		56	none	-	-	Average (of DGAC and PCC)	0
13+557	37155	Motorcycles	-		16	-		56	none	-	-	Average (of DGAC and PCC)	0
13+557	37155	Auxiliary Vehicle	-	-	-			56	none	-	-	Average (of DGAC and PCC)	0
14+452	*36225*	*Total*	-		*2415*	-	-		*Traffic light*	*0*	-	*Average (of DGAC and PCC)*	*0*
14+452	36225	Automobiles	-		1410	-		56	Traffic light	0	-	Average (of DGAC and PCC)	0
14+452	36225	Medium trucks	-		861	-		56	Traffic light	0	-	Average (of DGAC and PCC)	0
14+452	36225	Heavy trucks	-		113	-		56	Traffic light	0	-	Average (of DGAC and PCC)	0
14+452	36225	Buses	-		16	-		56	Traffic light	0	-	Average (of DGAC and PCC)	0
14+452	36225	Motorcycles	-		15	-		56	Traffic light	0	-	Average (of DGAC and PCC)	0
14+452	36225	Auxiliary Vehicle	-	-	-			56	Traffic light	0	-	Average (of DGAC and PCC)	0
15+825	*34350*	*Total*	-		*2290*	-	-		*Traffic light*	*0*	-	*Average (of DGAC and PCC)*	*0*
15+825	34350	Automobiles	-		1336	-		56	Traffic light	0	-	Average (of DGAC and PCC)	0
15+825	34350	Medium trucks	-		816	-		56	Traffic light	0	-	Average (of DGAC and PCC)	0
15+825	34350	Heavy trucks	-		107	-		56	Traffic light	0	-	Average (of DGAC and PCC)	0
15+825	34350	Buses	-		16	-		56	Traffic light	0	-	Average (of DGAC and PCC)	0
15+825	34350	Motorcycles	-		15	-		56	Traffic light	0	-	Average (of DGAC and PCC)	0
15+825	34350	Auxiliary Vehicle	-	-	-			56	Traffic light	0	-	Average (of DGAC and PCC)	0
16+057	*34350*	*Total*	-		*2290*	-	-		*none*	-	-	*Average (of DGAC and PCC)*	*0*
16+057	34350	Automobiles	-		1336	-		56	none	-	-	Average (of DGAC and PCC)	0
16+057	34350	Medium trucks	-		816	-		56	none	-	-	Average (of DGAC and PCC)	0

16+057	34350	Heavy trucks	-	107	-	56	none	-	-	Average (of DGAC and PCC)	0
16+057	34350	Buses	-	16	-	56	none	-	-	Average (of DGAC and PCC)	0
16+057	34350	Motorcycles	-	15	-	56	none	-	-	Average (of DGAC and PCC)	0
16+057	34350	Auxiliary Vehicle	-	-	-	56	none	-	-	Average (of DGAC and PCC)	0
17+102	*34350*	*Total*	-	*2290*	-	-	*none*	-	-	*Average (of DGAC and PCC)*	*0*
17+102	34350	Automobiles	-	1336	-	56	none	-	-	Average (of DGAC and PCC)	0
17+102	34350	Medium trucks	-	816	-	56	none	-	-	Average (of DGAC and PCC)	0
17+102	34350	Heavy trucks	-	107	-	56	none	-	-	Average (of DGAC and PCC)	0
17+102	34350	Buses	-	16	-	56	none	-	-	Average (of DGAC and PCC)	0
17+102	34350	Motorcycles	-	15	-	56	none	-	-	Average (of DGAC and PCC)	0
17+102	34350	Auxiliary Vehicle	-	-	-	56	none	-	-	Average (of DGAC and PCC)	0
17+399	*40035*	*Total*	-	*2669*	-	-	*Traffic light*	*0*	-	*Average (of DGAC and PCC)*	*0*
17+399	40035	Automobiles	-	1558	-	56	Traffic light	0	-	Average (of DGAC and PCC)	0
17+399	40035	Medium trucks	-	951	-	56	Traffic light	0	-	Average (of DGAC and PCC)	0
17+399	40035	Heavy trucks	-	125	-	56	Traffic light	0	-	Average (of DGAC and PCC)	0
17+399	40035	Buses	-	18	-	56	Traffic light	0	-	Average (of DGAC and PCC)	0
17+399	40035	Motorcycles	-	17	-	56	Traffic light	0	-	Average (of DGAC and PCC)	0
17+399	40035	Auxiliary Vehicle	-	-	-	56	Traffic light	0	-	Average (of DGAC and PCC)	0
17+742	-						-	-	-	-	-
0+000	*40035*	*Total*	-	*2669*	-	-	*none*	-	-	*Average (of DGAC and PCC)*	*0*
0+000	40035	Automobiles	-	1558	-	56	none	-	-	Average (of DGAC and PCC)	0
0+000	40035	Medium trucks	-	951	-	56	none	-	-	Average (of DGAC and PCC)	0
0+000	40035	Heavy trucks	-	125	-	56	none	-	-	Average (of DGAC and PCC)	0
0+000	40035	Buses	-	18	-	56	none	-	-	Average (of DGAC and PCC)	0
0+000	40035	Motorcycles	-	17	-	56	none	-	-	Average (of DGAC and PCC)	0
0+000	40035	Auxiliary Vehicle	-	-	-	56	none	-	-	Average (of DGAC and PCC)	0
Lower Azusa Rd WB	Traffic direction:	In entry direction									
8+855	*34890*	*Total*	-	*2326*	-	-	*none*	-	-	*Average (of DGAC and PCC)*	*0*
8+855	34890	Automobiles	-	1357	-	56	none	-	-	Average (of DGAC and PCC)	0
8+855	34890	Medium trucks	-	829	-	56	none	-	-	Average (of DGAC and PCC)	0
8+855	34890	Heavy trucks	-	109	-	56	none	-	-	Average (of DGAC and PCC)	0
8+855	34890	Buses	-	16	-	56	none	-	-	Average (of DGAC and PCC)	0
8+855	34890	Motorcycles	-	15	-	56	none	-	-	Average (of DGAC and PCC)	0
8+855	34890	Auxiliary Vehicle	-	-	-	56	none	-	-	Average (of DGAC and PCC)	0
9+185	*34890*	*Total*	-	*2326*	-	-	*Traffic light*	*0*	-	*Average (of DGAC and PCC)*	*0*
9+185	34890	Automobiles	-	1357	-	56	Traffic light	0	-	Average (of DGAC and PCC)	0
9+185	34890	Medium trucks	-	829	-	56	Traffic light	0	-	Average (of DGAC and PCC)	0
9+185	34890	Heavy trucks	-	109	-	56	Traffic light	0	-	Average (of DGAC and PCC)	0
9+185	34890	Buses	-	16	-	56	Traffic light	0	-	Average (of DGAC and PCC)	0
9+185	34890	Motorcycles	-	15	-	56	Traffic light	0	-	Average (of DGAC and PCC)	0
9+185	34890	Auxiliary Vehicle	-	-	-	56	Traffic light	0	-	Average (of DGAC and PCC)	0
9+375	*34890*	*Total*	-	*2326*	-	-	*none*	-	-	*Average (of DGAC and PCC)*	*0*
9+375	34890	Automobiles	-	1357	-	56	none	-	-	Average (of DGAC and PCC)	0
9+375	34890	Medium trucks	-	829	-	56	none	-	-	Average (of DGAC and PCC)	0
9+375	34890	Heavy trucks	-	109	-	56	none	-	-	Average (of DGAC and PCC)	0
9+375	34890	Buses	-	16	-	56	none	-	-	Average (of DGAC and PCC)	0
9+375	34890	Motorcycles	-	15	-	56	none	-	-	Average (of DGAC and PCC)	0
9+375	34890	Auxiliary Vehicle	-	-	-	56	none	-	-	Average (of DGAC and PCC)	0
9+596	*34890*	*Total*	-	*2326*	-	-	*none*	-	-	*Average (of DGAC and PCC)*	*0*
9+596	34890	Automobiles	-	1357	-	56	none	-	-	Average (of DGAC and PCC)	0
9+596	34890	Medium trucks	-	829	-	56	none	-	-	Average (of DGAC and PCC)	0
9+596	34890	Heavy trucks	-	109	-	56	none	-	-	Average (of DGAC and PCC)	0
9+596	34890	Buses	-	16	-	56	none	-	-	Average (of DGAC and PCC)	0
9+596	34890	Motorcycles	-	15	-	56	none	-	-	Average (of DGAC and PCC)	0
9+596	34890	Auxiliary Vehicle	-	-	-	56	none	-	-	Average (of DGAC and PCC)	0
10+731	*35550*	*Total*	-	*2370*	-	-	*Traffic light*	*0*	-	*Average (of DGAC and PCC)*	*0*
10+731	35550	Automobiles	-	1383	-	56	Traffic light	0	-	Average (of DGAC and PCC)	0
10+731	35550	Medium trucks	-	845	-	56	Traffic light	0	-	Average (of DGAC and PCC)	0

10+731	35550	Heavy trucks	-	111	-	56	Traffic light	0	-	Average (of DGAC and PCC)	0
10+731	35550	Buses	-	16	-	56	Traffic light	0	-	Average (of DGAC and PCC)	0
10+731	35550	Motorcycles	-	15	-	56	Traffic light	0	-	Average (of DGAC and PCC)	0
10+731	35550	Auxiliary Vehicle	-	-	-	56	Traffic light	0	-	Average (of DGAC and PCC)	0
12+138	*32895*	*Total*	-	*2193*	-	-	*Traffic light*	*0*	-	*Average (of DGAC and PCC)*	*0*
12+138	32895	Automobiles	-	1280	-	56	Traffic light	0	-	Average (of DGAC and PCC)	0
12+138	32895	Medium trucks	-	781	-	56	Traffic light	0	-	Average (of DGAC and PCC)	0
12+138	32895	Heavy trucks	-	103	-	56	Traffic light	0	-	Average (of DGAC and PCC)	0
12+138	32895	Buses	-	15	-	56	Traffic light	0	-	Average (of DGAC and PCC)	0
12+138	32895	Motorcycles	-	14	-	56	Traffic light	0	-	Average (of DGAC and PCC)	0
12+138	32895	Auxiliary Vehicle	-	-	-	56	Traffic light	0	-	Average (of DGAC and PCC)	0
13+015	*32895*	*Total*	-	*2193*	-	-	*none*	-	-	*Average (of DGAC and PCC)*	*0*
13+015	32895	Automobiles	-	1280	-	56	none	-	-	Average (of DGAC and PCC)	0
13+015	32895	Medium trucks	-	781	-	56	none	-	-	Average (of DGAC and PCC)	0
13+015	32895	Heavy trucks	-	103	-	56	none	-	-	Average (of DGAC and PCC)	0
13+015	32895	Buses	-	15	-	56	none	-	-	Average (of DGAC and PCC)	0
13+015	32895	Motorcycles	-	14	-	56	none	-	-	Average (of DGAC and PCC)	0
13+015	32895	Auxiliary Vehicle	-	-	-	56	none	-	-	Average (of DGAC and PCC)	0
14+695	*36195*	*Total*	-	*2413*	-	-	*Traffic light*	*0*	-	*Average (of DGAC and PCC)*	*0*
14+695	36195	Automobiles	-	1409	-	56	Traffic light	0	-	Average (of DGAC and PCC)	0
14+695	36195	Medium trucks	-	860	-	56	Traffic light	0	-	Average (of DGAC and PCC)	0
14+695	36195	Heavy trucks	-	113	-	56	Traffic light	0	-	Average (of DGAC and PCC)	0
14+695	36195	Buses	-	16	-	56	Traffic light	0	-	Average (of DGAC and PCC)	0
14+695	36195	Motorcycles	-	15	-	56	Traffic light	0	-	Average (of DGAC and PCC)	0
14+695	36195	Auxiliary Vehicle	-	-	-	56	Traffic light	0	-	Average (of DGAC and PCC)	0
15+727	*26850*	*Total*	-	*1790*	-	-	*Traffic light*	*0*	-	*Average (of DGAC and PCC)*	*0*
15+727	26850	Automobiles	-	1044	-	56	Traffic light	0	-	Average (of DGAC and PCC)	0
15+727	26850	Medium trucks	-	638	-	56	Traffic light	0	-	Average (of DGAC and PCC)	0
15+727	26850	Heavy trucks	-	84	-	56	Traffic light	0	-	Average (of DGAC and PCC)	0
15+727	26850	Buses	-	12	-	56	Traffic light	0	-	Average (of DGAC and PCC)	0
15+727	26850	Motorcycles	-	12	-	56	Traffic light	0	-	Average (of DGAC and PCC)	0
15+727	26850	Auxiliary Vehicle	-	-	-	56	Traffic light	0	-	Average (of DGAC and PCC)	0
17+563	*735*	*Total*	-	*49*	-	-	*Traffic light*	*0*	-	*Average (of DGAC and PCC)*	*0*
17+563	735	Automobiles	-	27	-	56	Traffic light	0	-	Average (of DGAC and PCC)	0
17+563	735	Medium trucks	-	17	-	56	Traffic light	0	-	Average (of DGAC and PCC)	0
17+563	735	Heavy trucks	-	3	-	56	Traffic light	0	-	Average (of DGAC and PCC)	0
17+563	735	Buses	-	1	-	56	Traffic light	0	-	Average (of DGAC and PCC)	0
17+563	735	Motorcycles	-	1	-	56	Traffic light	0	-	Average (of DGAC and PCC)	0
17+563	735	Auxiliary Vehicle	-	-	-	56	Traffic light	0	-	Average (of DGAC and PCC)	0
17+718	-						-	-	-	-	-
0+000	*735*	*Total*	-	*49*	-	-	*none*	-	-	*Average (of DGAC and PCC)*	*0*
0+000	735	Automobiles	-	27	-	56	none	-	-	Average (of DGAC and PCC)	0
0+000	735	Medium trucks	-	17	-	56	none	-	-	Average (of DGAC and PCC)	0
0+000	735	Heavy trucks	-	3	-	56	none	-	-	Average (of DGAC and PCC)	0
0+000	735	Buses	-	1	-	56	none	-	-	Average (of DGAC and PCC)	0
0+000	735	Motorcycles	-	1	-	56	none	-	-	Average (of DGAC and PCC)	0
0+000	735	Auxiliary Vehicle	-	-	-	56	none	-	-	Average (of DGAC and PCC)	0
Tyler Ave SB	Traffic direction:	In entry direction									
8+855	*44355*	*Total*	-	*2957*	-	-	*none*	-	-	*Average (of DGAC and PCC)*	*0*
8+855	44355	Automobiles	-	1726	-	40	none	-	-	Average (of DGAC and PCC)	0
8+855	44355	Medium trucks	-	1054	-	40	none	-	-	Average (of DGAC and PCC)	0
8+855	44355	Heavy trucks	-	138	-	40	none	-	-	Average (of DGAC and PCC)	0
8+855	44355	Buses	-	20	-	40	none	-	-	Average (of DGAC and PCC)	0
8+855	44355	Motorcycles	-	19	-	40	none	-	-	Average (of DGAC and PCC)	0
8+855	44355	Auxiliary Vehicle	-	-	-	40	none	-	-	Average (of DGAC and PCC)	0
9+080	*44355*	*Total*	-	*2957*	-	-	*none*	-	-	*Average (of DGAC and PCC)*	*0*
9+080	44355	Automobiles	-	1726	-	40	none	-	-	Average (of DGAC and PCC)	0
9+080	44355	Medium trucks	-	1054	-	40	none	-	-	Average (of DGAC and PCC)	0

9+080	44355	Heavy trucks	-		138	-		40	none	-	-	Average (of DGAC and PCC)	0
9+080	44355	Buses	-		20	-		40	none	-	-	Average (of DGAC and PCC)	0
9+080	44355	Motorcycles	-		19	-		40	none	-	-	Average (of DGAC and PCC)	0
9+080	44355	Auxiliary Vehicle	-	-	-			40	none	-	-	Average (of DGAC and PCC)	0
9+159	*44355*	*Total*	-		*2957*	-	-		*none*	-	-	*Average (of DGAC and PCC)*	*0*
9+159	44355	Automobiles	-		1726	-		40	none	-	-	Average (of DGAC and PCC)	0
9+159	44355	Medium trucks	-		1054	-		40	none	-	-	Average (of DGAC and PCC)	0
9+159	44355	Heavy trucks	-		138	-		40	none	-	-	Average (of DGAC and PCC)	0
9+159	44355	Buses	-		20	-		40	none	-	-	Average (of DGAC and PCC)	0
9+159	44355	Motorcycles	-		19	-		40	none	-	-	Average (of DGAC and PCC)	0
9+159	44355	Auxiliary Vehicle	-	-	-			40	none	-	-	Average (of DGAC and PCC)	0
9+219	*44355*	*Total*	-		*2957*	-	-		*none*	-	-	*Average (of DGAC and PCC)*	*0*
9+219	44355	Automobiles	-		1726	-		40	none	-	-	Average (of DGAC and PCC)	0
9+219	44355	Medium trucks	-		1054	-		40	none	-	-	Average (of DGAC and PCC)	0
9+219	44355	Heavy trucks	-		138	-		40	none	-	-	Average (of DGAC and PCC)	0
9+219	44355	Buses	-		20	-		40	none	-	-	Average (of DGAC and PCC)	0
9+219	44355	Motorcycles	-		19	-		40	none	-	-	Average (of DGAC and PCC)	0
9+219	44355	Auxiliary Vehicle	-	-	-			40	none	-	-	Average (of DGAC and PCC)	0
9+295	*44355*	*Total*	-		*2957*	-	-		*Traffic light*	*0*	-	*Average (of DGAC and PCC)*	*0*
9+295	44355	Automobiles	-		1726	-		40	Traffic light	0	-	Average (of DGAC and PCC)	0
9+295	44355	Medium trucks	-		1054	-		40	Traffic light	0	-	Average (of DGAC and PCC)	0
9+295	44355	Heavy trucks	-		138	-		40	Traffic light	0	-	Average (of DGAC and PCC)	0
9+295	44355	Buses	-		20	-		40	Traffic light	0	-	Average (of DGAC and PCC)	0
9+295	44355	Motorcycles	-		19	-		40	Traffic light	0	-	Average (of DGAC and PCC)	0
9+295	44355	Auxiliary Vehicle	-	-	-			40	Traffic light	0	-	Average (of DGAC and PCC)	0
9+897	*44355*	*Total*	-		*2957*	-	-		*none*	-	-	*Average (of DGAC and PCC)*	*0*
9+897	44355	Automobiles	-		1726	-		40	none	-	-	Average (of DGAC and PCC)	0
9+897	44355	Medium trucks	-		1054	-		40	none	-	-	Average (of DGAC and PCC)	0
9+897	44355	Heavy trucks	-		138	-		40	none	-	-	Average (of DGAC and PCC)	0
9+897	44355	Buses	-		20	-		40	none	-	-	Average (of DGAC and PCC)	0
9+897	44355	Motorcycles	-		19	-		40	none	-	-	Average (of DGAC and PCC)	0
9+897	44355	Auxiliary Vehicle	-	-	-			40	none	-	-	Average (of DGAC and PCC)	0
9+989	*44355*	*Total*	-		*2957*	-	-		*none*	-	-	*Average (of DGAC and PCC)*	*0*
9+989	44355	Automobiles	-		1726	-		40	none	-	-	Average (of DGAC and PCC)	0
9+989	44355	Medium trucks	-		1054	-		40	none	-	-	Average (of DGAC and PCC)	0
9+989	44355	Heavy trucks	-		138	-		40	none	-	-	Average (of DGAC and PCC)	0
9+989	44355	Buses	-		20	-		40	none	-	-	Average (of DGAC and PCC)	0
9+989	44355	Motorcycles	-		19	-		40	none	-	-	Average (of DGAC and PCC)	0
9+989	44355	Auxiliary Vehicle	-	-	-			40	none	-	-	Average (of DGAC and PCC)	0
10+301	*44355*	*Total*	-		*2957*	-	-		*none*	-	-	*Average (of DGAC and PCC)*	*0*
10+301	44355	Automobiles	-		1726	-		40	none	-	-	Average (of DGAC and PCC)	0
10+301	44355	Medium trucks	-		1054	-		40	none	-	-	Average (of DGAC and PCC)	0
10+301	44355	Heavy trucks	-		138	-		40	none	-	-	Average (of DGAC and PCC)	0
10+301	44355	Buses	-		20	-		40	none	-	-	Average (of DGAC and PCC)	0
10+301	44355	Motorcycles	-		19	-		40	none	-	-	Average (of DGAC and PCC)	0
10+301	44355	Auxiliary Vehicle	-	-	-			40	none	-	-	Average (of DGAC and PCC)	0
10+443	*44355*	*Total*	-		*2957*	-	-		*none*	-	-	*Average (of DGAC and PCC)*	*0*
10+443	44355	Automobiles	-		1726	-		40	none	-	-	Average (of DGAC and PCC)	0
10+443	44355	Medium trucks	-		1054	-		40	none	-	-	Average (of DGAC and PCC)	0
10+443	44355	Heavy trucks	-		138	-		40	none	-	-	Average (of DGAC and PCC)	0
10+443	44355	Buses	-		20	-		40	none	-	-	Average (of DGAC and PCC)	0
10+443	44355	Motorcycles	-		19	-		40	none	-	-	Average (of DGAC and PCC)	0
10+443	44355	Auxiliary Vehicle	-	-	-			40	none	-	-	Average (of DGAC and PCC)	0
10+494	*44355*	*Total*	-		*2957*	-	-		*none*	-	-	*Average (of DGAC and PCC)*	*0*
10+494	44355	Automobiles	-		1726	-		40	none	-	-	Average (of DGAC and PCC)	0
10+494	44355	Medium trucks	-		1054	-		40	none	-	-	Average (of DGAC and PCC)	0
10+494	44355	Heavy trucks	-		138	-		40	none	-	-	Average (of DGAC and PCC)	0
10+494	44355	Buses	-		20	-		40	none	-	-	Average (of DGAC and PCC)	0

10+494	44355	Motorcycles	-	19	-	40	none	-	-	Average (of DGAC and PCC)	0
10+494	44355	Auxiliary Vehicle	-	-	-	40	none	-	-	Average (of DGAC and PCC)	0
10+960	*44355*	*Total*	-	*2957*	-	-	*none*	-	-	*Average (of DGAC and PCC)*	*0*
10+960	44355	Automobiles	-	1726	-	40	none	-	-	Average (of DGAC and PCC)	0
10+960	44355	Medium trucks	-	1054	-	40	none	-	-	Average (of DGAC and PCC)	0
10+960	44355	Heavy trucks	-	138	-	40	none	-	-	Average (of DGAC and PCC)	0
10+960	44355	Buses	-	20	-	40	none	-	-	Average (of DGAC and PCC)	0
10+960	44355	Motorcycles	-	19	-	40	none	-	-	Average (of DGAC and PCC)	0
10+960	44355	Auxiliary Vehicle	-	-	-	40	none	-	-	Average (of DGAC and PCC)	0
11+832	*15285*	*Total*	-	*1019*	-	-	*Traffic light*	*0*	-	*Average (of DGAC and PCC)*	*0*
11+832	15285	Automobiles	-	594	-	40	Traffic light	0	-	Average (of DGAC and PCC)	0
11+832	15285	Medium trucks	-	363	-	40	Traffic light	0	-	Average (of DGAC and PCC)	0
11+832	15285	Heavy trucks	-	48	-	40	Traffic light	0	-	Average (of DGAC and PCC)	0
11+832	15285	Buses	-	7	-	40	Traffic light	0	-	Average (of DGAC and PCC)	0
11+832	15285	Motorcycles	-	7	-	40	Traffic light	0	-	Average (of DGAC and PCC)	0
11+832	15285	Auxiliary Vehicle	-	-	-	40	Traffic light	0	-	Average (of DGAC and PCC)	0
12+140	*15285*	*Total*	-	*1019*	-	-	*none*	-	-	*Average (of DGAC and PCC)*	*0*
12+140	15285	Automobiles	-	594	-	40	none	-	-	Average (of DGAC and PCC)	0
12+140	15285	Medium trucks	-	363	-	40	none	-	-	Average (of DGAC and PCC)	0
12+140	15285	Heavy trucks	-	48	-	40	none	-	-	Average (of DGAC and PCC)	0
12+140	15285	Buses	-	7	-	40	none	-	-	Average (of DGAC and PCC)	0
12+140	15285	Motorcycles	-	7	-	40	none	-	-	Average (of DGAC and PCC)	0
12+140	15285	Auxiliary Vehicle	-	-	-	40	none	-	-	Average (of DGAC and PCC)	0
12+255	*15090*	*Total*	-	*1006*	-	-	*Traffic light*	*0*	-	*Average (of DGAC and PCC)*	*0*
12+255	15090	Automobiles	-	587	-	40	Traffic light	0	-	Average (of DGAC and PCC)	0
12+255	15090	Medium trucks	-	358	-	40	Traffic light	0	-	Average (of DGAC and PCC)	0
12+255	15090	Heavy trucks	-	47	-	40	Traffic light	0	-	Average (of DGAC and PCC)	0
12+255	15090	Buses	-	7	-	40	Traffic light	0	-	Average (of DGAC and PCC)	0
12+255	15090	Motorcycles	-	7	-	40	Traffic light	0	-	Average (of DGAC and PCC)	0
12+255	15090	Auxiliary Vehicle	-	-	-	40	Traffic light	0	-	Average (of DGAC and PCC)	0
13+507	*27855*	*Total*	-	*1857*	-	-	*Traffic light*	*0*	-	*Average (of DGAC and PCC)*	*0*
13+507	27855	Automobiles	-	1083	-	40	Traffic light	0	-	Average (of DGAC and PCC)	0
13+507	27855	Medium trucks	-	662	-	40	Traffic light	0	-	Average (of DGAC and PCC)	0
13+507	27855	Heavy trucks	-	87	-	40	Traffic light	0	-	Average (of DGAC and PCC)	0
13+507	27855	Buses	-	13	-	40	Traffic light	0	-	Average (of DGAC and PCC)	0
13+507	27855	Motorcycles	-	12	-	40	Traffic light	0	-	Average (of DGAC and PCC)	0
13+507	27855	Auxiliary Vehicle	-	-	-	40	Traffic light	0	-	Average (of DGAC and PCC)	0
13+960	-						-	-	-	-	-
0+000	*27855*	*Total*	-	*1857*	-	-	*none*	-	-	*Average (of DGAC and PCC)*	*0*
0+000	27855	Automobiles	-	1083	-	40	none	-	-	Average (of DGAC and PCC)	0
0+000	27855	Medium trucks	-	662	-	40	none	-	-	Average (of DGAC and PCC)	0
0+000	27855	Heavy trucks	-	87	-	40	none	-	-	Average (of DGAC and PCC)	0
0+000	27855	Buses	-	13	-	40	none	-	-	Average (of DGAC and PCC)	0
0+000	27855	Motorcycles	-	12	-	40	none	-	-	Average (of DGAC and PCC)	0
0+000	27855	Auxiliary Vehicle	-	-	-	40	none	-	-	Average (of DGAC and PCC)	0
Tyler Ave NB	Traffic direction:	In entry direction									
8+855	*28875*	*Total*	-	*1925*	-	-	*none*	-	-	*Average (of DGAC and PCC)*	*0*
8+855	28875	Automobiles	-	1124	-	40	none	-	-	Average (of DGAC and PCC)	0
8+855	28875	Medium trucks	-	686	-	40	none	-	-	Average (of DGAC and PCC)	0
8+855	28875	Heavy trucks	-	90	-	40	none	-	-	Average (of DGAC and PCC)	0
8+855	28875	Buses	-	13	-	40	none	-	-	Average (of DGAC and PCC)	0
8+855	28875	Motorcycles	-	12	-	40	none	-	-	Average (of DGAC and PCC)	0
8+855	28875	Auxiliary Vehicle	-	-	-	40	none	-	-	Average (of DGAC and PCC)	0
9+289	*28875*	*Total*	-	*1925*	-	-	*Traffic light*	*0*	-	*Average (of DGAC and PCC)*	*0*
9+289	28875	Automobiles	-	1124	-	40	Traffic light	0	-	Average (of DGAC and PCC)	0
9+289	28875	Medium trucks	-	686	-	40	Traffic light	0	-	Average (of DGAC and PCC)	0
9+289	28875	Heavy trucks	-	90	-	40	Traffic light	0	-	Average (of DGAC and PCC)	0
9+289	28875	Buses	-	13	-	40	Traffic light	0	-	Average (of DGAC and PCC)	0

9+289	28875	Motorcycles	-		12	-		40	Traffic light	0	-	Average (of DGAC and PCC)	0
9+289	28875	Auxiliary Vehicle	-	-	-			40	Traffic light	0	-	Average (of DGAC and PCC)	0
10+554	*14415*	*Total*	-		*961*	-	-		*Traffic light*	*0*	-	*Average (of DGAC and PCC)*	*0*
10+554	14415	Automobiles	-		561	-		40	Traffic light	0	-	Average (of DGAC and PCC)	0
10+554	14415	Medium trucks	-		342	-		40	Traffic light	0	-	Average (of DGAC and PCC)	0
10+554	14415	Heavy trucks	-		45	-		40	Traffic light	0	-	Average (of DGAC and PCC)	0
10+554	14415	Buses	-		7	-		40	Traffic light	0	-	Average (of DGAC and PCC)	0
10+554	14415	Motorcycles	-		6	-		40	Traffic light	0	-	Average (of DGAC and PCC)	0
10+554	14415	Auxiliary Vehicle	-	-	-			40	Traffic light	0	-	Average (of DGAC and PCC)	0
10+667	*14415*	*Total*	-		*961*	-	-		*none*	-	-	*Average (of DGAC and PCC)*	*0*
10+667	14415	Automobiles	-		561	-		40	none	-	-	Average (of DGAC and PCC)	0
10+667	14415	Medium trucks	-		342	-		40	none	-	-	Average (of DGAC and PCC)	0
10+667	14415	Heavy trucks	-		45	-		40	none	-	-	Average (of DGAC and PCC)	0
10+667	14415	Buses	-		7	-		40	none	-	-	Average (of DGAC and PCC)	0
10+667	14415	Motorcycles	-		6	-		40	none	-	-	Average (of DGAC and PCC)	0
10+667	14415	Auxiliary Vehicle	-	-	-			40	none	-	-	Average (of DGAC and PCC)	0
10+952	*17670*	*Total*	-		*1178*	-	-		*Traffic light*	*0*	-	*Average (of DGAC and PCC)*	*0*
10+952	17670	Automobiles	-		687	-		40	Traffic light	0	-	Average (of DGAC and PCC)	0
10+952	17670	Medium trucks	-		420	-		40	Traffic light	0	-	Average (of DGAC and PCC)	0
10+952	17670	Heavy trucks	-		55	-		40	Traffic light	0	-	Average (of DGAC and PCC)	0
10+952	17670	Buses	-		8	-		40	Traffic light	0	-	Average (of DGAC and PCC)	0
10+952	17670	Motorcycles	-		8	-		40	Traffic light	0	-	Average (of DGAC and PCC)	0
10+952	17670	Auxiliary Vehicle	-	-	-			40	Traffic light	0	-	Average (of DGAC and PCC)	0
11+852	*17670*	*Total*	-		*1178*	-	-		*none*	-	-	*Average (of DGAC and PCC)*	*0*
11+852	17670	Automobiles	-		687	-		40	none	-	-	Average (of DGAC and PCC)	0
11+852	17670	Medium trucks	-		420	-		40	none	-	-	Average (of DGAC and PCC)	0
11+852	17670	Heavy trucks	-		55	-		40	none	-	-	Average (of DGAC and PCC)	0
11+852	17670	Buses	-		8	-		40	none	-	-	Average (of DGAC and PCC)	0
11+852	17670	Motorcycles	-		8	-		40	none	-	-	Average (of DGAC and PCC)	0
11+852	17670	Auxiliary Vehicle	-	-	-			40	none	-	-	Average (of DGAC and PCC)	0
12+309	*17670*	*Total*	-		*1178*	-	-		*none*	-	-	*Average (of DGAC and PCC)*	*0*
12+309	17670	Automobiles	-		687	-		40	none	-	-	Average (of DGAC and PCC)	0
12+309	17670	Medium trucks	-		420	-		40	none	-	-	Average (of DGAC and PCC)	0
12+309	17670	Heavy trucks	-		55	-		40	none	-	-	Average (of DGAC and PCC)	0
12+309	17670	Buses	-		8	-		40	none	-	-	Average (of DGAC and PCC)	0
12+309	17670	Motorcycles	-		8	-		40	none	-	-	Average (of DGAC and PCC)	0
12+309	17670	Auxiliary Vehicle	-	-	-			40	none	-	-	Average (of DGAC and PCC)	0
12+363	*17670*	*Total*	-		*1178*	-	-		*none*	-	-	*Average (of DGAC and PCC)*	*0*
12+363	17670	Automobiles	-		687	-		40	none	-	-	Average (of DGAC and PCC)	0
12+363	17670	Medium trucks	-		420	-		40	none	-	-	Average (of DGAC and PCC)	0
12+363	17670	Heavy trucks	-		55	-		40	none	-	-	Average (of DGAC and PCC)	0
12+363	17670	Buses	-		8	-		40	none	-	-	Average (of DGAC and PCC)	0
12+363	17670	Motorcycles	-		8	-		40	none	-	-	Average (of DGAC and PCC)	0
12+363	17670	Auxiliary Vehicle	-	-	-			40	none	-	-	Average (of DGAC and PCC)	0
12+649	*17670*	*Total*	-		*1178*	-	-		*none*	-	-	*Average (of DGAC and PCC)*	*0*
12+649	17670	Automobiles	-		687	-		40	none	-	-	Average (of DGAC and PCC)	0
12+649	17670	Medium trucks	-		420	-		40	none	-	-	Average (of DGAC and PCC)	0
12+649	17670	Heavy trucks	-		55	-		40	none	-	-	Average (of DGAC and PCC)	0
12+649	17670	Buses	-		8	-		40	none	-	-	Average (of DGAC and PCC)	0
12+649	17670	Motorcycles	-		8	-		40	none	-	-	Average (of DGAC and PCC)	0
12+649	17670	Auxiliary Vehicle	-	-	-			40	none	-	-	Average (of DGAC and PCC)	0
12+807	*17670*	*Total*	-		*1178*	-	-		*none*	-	-	*Average (of DGAC and PCC)*	*0*
12+807	17670	Automobiles	-		687	-		40	none	-	-	Average (of DGAC and PCC)	0
12+807	17670	Medium trucks	-		420	-		40	none	-	-	Average (of DGAC and PCC)	0
12+807	17670	Heavy trucks	-		55	-		40	none	-	-	Average (of DGAC and PCC)	0
12+807	17670	Buses	-		8	-		40	none	-	-	Average (of DGAC and PCC)	0
12+807	17670	Motorcycles	-		8	-		40	none	-	-	Average (of DGAC and PCC)	0
12+807	17670	Auxiliary Vehicle	-	-	-			40	none	-	-	Average (of DGAC and PCC)	0

13+494	*47430*	*Total*	-	*3162*	-	-	*Traffic light*	*0*	-	*Average (of DGAC and PCC)*	*0*
13+494	47430	Automobiles	-	1846	-		40 Traffic light	0	-	Average (of DGAC and PCC)	0
13+494	47430	Medium trucks	-	1127	-		40 Traffic light	0	-	Average (of DGAC and PCC)	0
13+494	47430	Heavy trucks	-	148	-		40 Traffic light	0	-	Average (of DGAC and PCC)	0
13+494	47430	Buses	-	21	-		40 Traffic light	0	-	Average (of DGAC and PCC)	0
13+494	47430	Motorcycles	-	20	-		40 Traffic light	0	-	Average (of DGAC and PCC)	0
13+494	47430	Auxiliary Vehicle	-	-	-		40 Traffic light	0	-	Average (of DGAC and PCC)	0
13+584	*47430*	*Total*	-	*3162*	-	-	*none*	-	-	*Average (of DGAC and PCC)*	*0*
13+584	47430	Automobiles	-	1846	-		40 none	-	-	Average (of DGAC and PCC)	0
13+584	47430	Medium trucks	-	1127	-		40 none	-	-	Average (of DGAC and PCC)	0
13+584	47430	Heavy trucks	-	148	-		40 none	-	-	Average (of DGAC and PCC)	0
13+584	47430	Buses	-	21	-		40 none	-	-	Average (of DGAC and PCC)	0
13+584	47430	Motorcycles	-	20	-		40 none	-	-	Average (of DGAC and PCC)	0
13+584	47430	Auxiliary Vehicle	-	-	-		40 none	-	-	Average (of DGAC and PCC)	0
13+717	*47430*	*Total*	-	*3162*	-	-	*none*	-	-	*Average (of DGAC and PCC)*	*0*
13+717	47430	Automobiles	-	1846	-		40 none	-	-	Average (of DGAC and PCC)	0
13+717	47430	Medium trucks	-	1127	-		40 none	-	-	Average (of DGAC and PCC)	0
13+717	47430	Heavy trucks	-	148	-		40 none	-	-	Average (of DGAC and PCC)	0
13+717	47430	Buses	-	21	-		40 none	-	-	Average (of DGAC and PCC)	0
13+717	47430	Motorcycles	-	20	-		40 none	-	-	Average (of DGAC and PCC)	0
13+717	47430	Auxiliary Vehicle	-	-	-		40 none	-	-	Average (of DGAC and PCC)	0
13+960	-						-	-	-	-	-
0+000	*47430*	*Total*	-	*3162*	-	-	*none*	-	-	*Average (of DGAC and PCC)*	*0*
0+000	47430	Automobiles	-	1846	-		40 none	-	-	Average (of DGAC and PCC)	0
0+000	47430	Medium trucks	-	1127	-		40 none	-	-	Average (of DGAC and PCC)	0
0+000	47430	Heavy trucks	-	148	-		40 none	-	-	Average (of DGAC and PCC)	0
0+000	47430	Buses	-	21	-		40 none	-	-	Average (of DGAC and PCC)	0
0+000	47430	Motorcycles	-	20	-		40 none	-	-	Average (of DGAC and PCC)	0
0+000	47430	Auxiliary Vehicle	-	-	-		40 none	-	-	Average (of DGAC and PCC)	0
Loftus Dr EB	Traffic direction:	In entry direction									
9+289	*14910*	*Total*	-	*994*	-	-	*Traffic light*	*0*	-	*Average (of DGAC and PCC)*	*0*
9+289	14910	Automobiles	-	579	-		56 Traffic light	0	-	Average (of DGAC and PCC)	0
9+289	14910	Medium trucks	-	354	-		56 Traffic light	0	-	Average (of DGAC and PCC)	0
9+289	14910	Heavy trucks	-	47	-		56 Traffic light	0	-	Average (of DGAC and PCC)	0
9+289	14910	Buses	-	7	-		56 Traffic light	0	-	Average (of DGAC and PCC)	0
9+289	14910	Motorcycles	-	7	-		56 Traffic light	0	-	Average (of DGAC and PCC)	0
9+289	14910	Auxiliary Vehicle	-	-	-		56 Traffic light	0	-	Average (of DGAC and PCC)	0
9+811	*7380*	*Total*	-	*492*	-	-	*Traffic light*	*0*	-	*Average (of DGAC and PCC)*	*0*
9+811	7380	Automobiles	-	286	-		56 Traffic light	0	-	Average (of DGAC and PCC)	0
9+811	7380	Medium trucks	-	175	-		56 Traffic light	0	-	Average (of DGAC and PCC)	0
9+811	7380	Heavy trucks	-	23	-		56 Traffic light	0	-	Average (of DGAC and PCC)	0
9+811	7380	Buses	-	4	-		56 Traffic light	0	-	Average (of DGAC and PCC)	0
9+811	7380	Motorcycles	-	4	-		56 Traffic light	0	-	Average (of DGAC and PCC)	0
9+811	7380	Auxiliary Vehicle	-	-	-		56 Traffic light	0	-	Average (of DGAC and PCC)	0
10+045	-						-	-	-	-	-
0+000	*7380*	*Total*	-	*492*	-	-	*none*	-	-	*Average (of DGAC and PCC)*	*0*
0+000	7380	Automobiles	-	286	-		56 none	-	-	Average (of DGAC and PCC)	0
0+000	7380	Medium trucks	-	175	-		56 none	-	-	Average (of DGAC and PCC)	0
0+000	7380	Heavy trucks	-	23	-		56 none	-	-	Average (of DGAC and PCC)	0
0+000	7380	Buses	-	4	-		56 none	-	-	Average (of DGAC and PCC)	0
0+000	7380	Motorcycles	-	4	-		56 none	-	-	Average (of DGAC and PCC)	0
0+000	7380	Auxiliary Vehicle	-	-	-		56 none	-	-	Average (of DGAC and PCC)	0
Loftus Dr WB	Traffic direction:	In entry direction									
9+289	*23145*	*Total*	-	*1543*	-	-	*none*	-	-	*Average (of DGAC and PCC)*	*0*
9+289	23145	Automobiles	-	900	-		56 none	-	-	Average (of DGAC and PCC)	0
9+289	23145	Medium trucks	-	550	-		56 none	-	-	Average (of DGAC and PCC)	0
9+289	23145	Heavy trucks	-	72	-		56 none	-	-	Average (of DGAC and PCC)	0
9+289	23145	Buses	-	11	-		56 none	-	-	Average (of DGAC and PCC)	0

9+289	23145	Motorcycles	-		10	-		56	none	-	-	Average (of DGAC and PCC)	0
9+289	23145	Auxiliary Vehicle	-	-	-			56	none	-	-	Average (of DGAC and PCC)	0
9+503	*23145*	*Total*	-		*1543*	-	-		*Traffic light*	*0*	-	*Average (of DGAC and PCC)*	*0*
9+503	23145	Automobiles	-		900	-		56	Traffic light	0	-	Average (of DGAC and PCC)	0
9+503	23145	Medium trucks	-		550	-		56	Traffic light	0	-	Average (of DGAC and PCC)	0
9+503	23145	Heavy trucks	-		72	-		56	Traffic light	0	-	Average (of DGAC and PCC)	0
9+503	23145	Buses	-		11	-		56	Traffic light	0	-	Average (of DGAC and PCC)	0
9+503	23145	Motorcycles	-		10	-		56	Traffic light	0	-	Average (of DGAC and PCC)	0
9+503	23145	Auxiliary Vehicle	-	-	-			56	Traffic light	0	-	Average (of DGAC and PCC)	0
10+045	-								-	-	-	-	-
0+000	*23145*	*Total*	-		*1543*	-	-		*none*	-	-	*Average (of DGAC and PCC)*	*0*
0+000	23145	Automobiles	-		900	-		56	none	-	-	Average (of DGAC and PCC)	0
0+000	23145	Medium trucks	-		550	-		56	none	-	-	Average (of DGAC and PCC)	0
0+000	23145	Heavy trucks	-		72	-		56	none	-	-	Average (of DGAC and PCC)	0
0+000	23145	Buses	-		11	-		56	none	-	-	Average (of DGAC and PCC)	0
0+000	23145	Motorcycles	-		10	-		56	none	-	-	Average (of DGAC and PCC)	0
0+000	23145	Auxiliary Vehicle	-	-	-			56	none	-	-	Average (of DGAC and PCC)	0
Santa Anita Ave SB	Traffic direction:	In entry direction											
10+304	*44355*	*Total*	-		*2957*	-	-		*none*	-	-	*Average (of DGAC and PCC)*	*0*
10+304	44355	Automobiles	-		1726	-		56	none	-	-	Average (of DGAC and PCC)	0
10+304	44355	Medium trucks	-		1054	-		56	none	-	-	Average (of DGAC and PCC)	0
10+304	44355	Heavy trucks	-		138	-		56	none	-	-	Average (of DGAC and PCC)	0
10+304	44355	Buses	-		20	-		56	none	-	-	Average (of DGAC and PCC)	0
10+304	44355	Motorcycles	-		19	-		56	none	-	-	Average (of DGAC and PCC)	0
10+304	44355	Auxiliary Vehicle	-	-	-			56	none	-	-	Average (of DGAC and PCC)	0
10+458	*44355*	*Total*	-		*2957*	-	-		*none*	-	-	*Average (of DGAC and PCC)*	*0*
10+458	44355	Automobiles	-		1726	-		56	none	-	-	Average (of DGAC and PCC)	0
10+458	44355	Medium trucks	-		1054	-		56	none	-	-	Average (of DGAC and PCC)	0
10+458	44355	Heavy trucks	-		138	-		56	none	-	-	Average (of DGAC and PCC)	0
10+458	44355	Buses	-		20	-		56	none	-	-	Average (of DGAC and PCC)	0
10+458	44355	Motorcycles	-		19	-		56	none	-	-	Average (of DGAC and PCC)	0
10+458	44355	Auxiliary Vehicle	-	-	-			56	none	-	-	Average (of DGAC and PCC)	0
12+144	*41955*	*Total*	-		*2797*	-	-		*Traffic light*	*0*	-	*Average (of DGAC and PCC)*	*0*
12+144	41955	Automobiles	-		1632	-		56	Traffic light	0	-	Average (of DGAC and PCC)	0
12+144	41955	Medium trucks	-		997	-		56	Traffic light	0	-	Average (of DGAC and PCC)	0
12+144	41955	Heavy trucks	-		131	-		56	Traffic light	0	-	Average (of DGAC and PCC)	0
12+144	41955	Buses	-		19	-		56	Traffic light	0	-	Average (of DGAC and PCC)	0
12+144	41955	Motorcycles	-		18	-		56	Traffic light	0	-	Average (of DGAC and PCC)	0
12+144	41955	Auxiliary Vehicle	-	-	-			56	Traffic light	0	-	Average (of DGAC and PCC)	0
12+291	*41955*	*Total*	-		*2797*	-	-		*Traffic light*	*0*	-	*Average (of DGAC and PCC)*	*0*
12+291	41955	Automobiles	-		1632	-		56	Traffic light	0	-	Average (of DGAC and PCC)	0
12+291	41955	Medium trucks	-		997	-		56	Traffic light	0	-	Average (of DGAC and PCC)	0
12+291	41955	Heavy trucks	-		131	-		56	Traffic light	0	-	Average (of DGAC and PCC)	0
12+291	41955	Buses	-		19	-		56	Traffic light	0	-	Average (of DGAC and PCC)	0
12+291	41955	Motorcycles	-		18	-		56	Traffic light	0	-	Average (of DGAC and PCC)	0
12+291	41955	Auxiliary Vehicle	-	-	-			56	Traffic light	0	-	Average (of DGAC and PCC)	0
12+780	*51090*	*Total*	-		*3406*	-	-		*Traffic light*	*0*	-	*Average (of DGAC and PCC)*	*0*
12+780	51090	Automobiles	-		1989	-		56	Traffic light	0	-	Average (of DGAC and PCC)	0
12+780	51090	Medium trucks	-		1214	-		56	Traffic light	0	-	Average (of DGAC and PCC)	0
12+780	51090	Heavy trucks	-		159	-		56	Traffic light	0	-	Average (of DGAC and PCC)	0
12+780	51090	Buses	-		23	-		56	Traffic light	0	-	Average (of DGAC and PCC)	0
12+780	51090	Motorcycles	-		21	-		56	Traffic light	0	-	Average (of DGAC and PCC)	0
12+780	51090	Auxiliary Vehicle	-	-	-			56	Traffic light	0	-	Average (of DGAC and PCC)	0
14+018	*35655*	*Total*	-		*2377*	-	-		*Traffic light*	*0*	-	*Average (of DGAC and PCC)*	*0*
14+018	35655	Automobiles	-		1388	-		56	Traffic light	0	-	Average (of DGAC and PCC)	0
14+018	35655	Medium trucks	-		847	-		56	Traffic light	0	-	Average (of DGAC and PCC)	0
14+018	35655	Heavy trucks	-		111	-		56	Traffic light	0	-	Average (of DGAC and PCC)	0
14+018	35655	Buses	-		16	-		56	Traffic light	0	-	Average (of DGAC and PCC)	0

14+018	35655	Motorcycles	-		15	-		56	Traffic light	0	-	Average (of DGAC and PCC)	0
14+018	35655	Auxiliary Vehicle	-	-	-			56	Traffic light	0	-	Average (of DGAC and PCC)	0
14+188	*35655*	*Total*	-		*2377*	-	-	*none*		-	-	*Average (of DGAC and PCC)*	*0*
14+188	35655	Automobiles	-		1388	-		56	none	-	-	Average (of DGAC and PCC)	0
14+188	35655	Medium trucks	-		847	-		56	none	-	-	Average (of DGAC and PCC)	0
14+188	35655	Heavy trucks	-		111	-		56	none	-	-	Average (of DGAC and PCC)	0
14+188	35655	Buses	-		16	-		56	none	-	-	Average (of DGAC and PCC)	0
14+188	35655	Motorcycles	-		15	-		56	none	-	-	Average (of DGAC and PCC)	0
14+188	35655	Auxiliary Vehicle	-	-	-			56	none	-	-	Average (of DGAC and PCC)	0
14+491	-							-		-	-	-	-
Santa Anita Ave NB	Traffic direction:	In entry direction											
10+304	*40980*	*Total*	-		*2732*	-	-	*none*		-	-	*Average (of DGAC and PCC)*	*0*
10+304	40980	Automobiles	-		1595	-		56	none	-	-	Average (of DGAC and PCC)	0
10+304	40980	Medium trucks	-		974	-		56	none	-	-	Average (of DGAC and PCC)	0
10+304	40980	Heavy trucks	-		128	-		56	none	-	-	Average (of DGAC and PCC)	0
10+304	40980	Buses	-		18	-		56	none	-	-	Average (of DGAC and PCC)	0
10+304	40980	Motorcycles	-		17	-		56	none	-	-	Average (of DGAC and PCC)	0
10+304	40980	Auxiliary Vehicle	-	-	-			56	none	-	-	Average (of DGAC and PCC)	0
10+577	*40980*	*Total*	-		*2732*	-	-	*none*		-	-	*Average (of DGAC and PCC)*	*0*
10+577	40980	Automobiles	-		1595	-		56	none	-	-	Average (of DGAC and PCC)	0
10+577	40980	Medium trucks	-		974	-		56	none	-	-	Average (of DGAC and PCC)	0
10+577	40980	Heavy trucks	-		128	-		56	none	-	-	Average (of DGAC and PCC)	0
10+577	40980	Buses	-		18	-		56	none	-	-	Average (of DGAC and PCC)	0
10+577	40980	Motorcycles	-		17	-		56	none	-	-	Average (of DGAC and PCC)	0
10+577	40980	Auxiliary Vehicle	-	-	-			56	none	-	-	Average (of DGAC and PCC)	0
10+741	*40980*	*Total*	-		*2732*	-	-	*none*		-	-	*Average (of DGAC and PCC)*	*0*
10+741	40980	Automobiles	-		1595	-		56	none	-	-	Average (of DGAC and PCC)	0
10+741	40980	Medium trucks	-		974	-		56	none	-	-	Average (of DGAC and PCC)	0
10+741	40980	Heavy trucks	-		128	-		56	none	-	-	Average (of DGAC and PCC)	0
10+741	40980	Buses	-		18	-		56	none	-	-	Average (of DGAC and PCC)	0
10+741	40980	Motorcycles	-		17	-		56	none	-	-	Average (of DGAC and PCC)	0
10+741	40980	Auxiliary Vehicle	-	-	-			56	none	-	-	Average (of DGAC and PCC)	0
12+002	*46425*	*Total*	-		*3095*	-	-	*Traffic light*		*0*	-	*Average (of DGAC and PCC)*	*0*
12+002	46425	Automobiles	-		1806	-		56	Traffic light	0	-	Average (of DGAC and PCC)	0
12+002	46425	Medium trucks	-		1103	-		56	Traffic light	0	-	Average (of DGAC and PCC)	0
12+002	46425	Heavy trucks	-		145	-		56	Traffic light	0	-	Average (of DGAC and PCC)	0
12+002	46425	Buses	-		21	-		56	Traffic light	0	-	Average (of DGAC and PCC)	0
12+002	46425	Motorcycles	-		20	-		56	Traffic light	0	-	Average (of DGAC and PCC)	0
12+002	46425	Auxiliary Vehicle	-	-	-			56	Traffic light	0	-	Average (of DGAC and PCC)	0
12+148	*65925*	*Total*	-		*4395*	-	-	*none*		-	-	*Average (of DGAC and PCC)*	*0*
12+148	65925	Automobiles	-		1806	-		56	none	-	-	Average (of DGAC and PCC)	0
12+148	65925	Medium trucks	-		1103	-		56	none	-	-	Average (of DGAC and PCC)	0
12+148	65925	Heavy trucks	-		1445	-		56	none	-	-	Average (of DGAC and PCC)	0
12+148	65925	Buses	-		21	-		56	none	-	-	Average (of DGAC and PCC)	0
12+148	65925	Motorcycles	-		20	-		56	none	-	-	Average (of DGAC and PCC)	0
12+148	65925	Auxiliary Vehicle	-	-	-			56	none	-	-	Average (of DGAC and PCC)	0
12+285	*46425*	*Total*	-		*3095*	-	-	*none*		-	-	*Average (of DGAC and PCC)*	*0*
12+285	46425	Automobiles	-		1806	-		56	none	-	-	Average (of DGAC and PCC)	0
12+285	46425	Medium trucks	-		1103	-		56	none	-	-	Average (of DGAC and PCC)	0
12+285	46425	Heavy trucks	-		145	-		56	none	-	-	Average (of DGAC and PCC)	0
12+285	46425	Buses	-		21	-		56	none	-	-	Average (of DGAC and PCC)	0
12+285	46425	Motorcycles	-		20	-		56	none	-	-	Average (of DGAC and PCC)	0
12+285	46425	Auxiliary Vehicle	-	-	-			56	none	-	-	Average (of DGAC and PCC)	0
12+478	*46425*	*Total*	-		*3095*	-	-	*none*		-	-	*Average (of DGAC and PCC)*	*0*
12+478	46425	Automobiles	-		1806	-		56	none	-	-	Average (of DGAC and PCC)	0
12+478	46425	Medium trucks	-		1103	-		56	none	-	-	Average (of DGAC and PCC)	0
12+478	46425	Heavy trucks	-		145	-		56	none	-	-	Average (of DGAC and PCC)	0
12+478	46425	Buses	-		21	-		56	none	-	-	Average (of DGAC and PCC)	0

12+478		46425	Motorcycles	-		20	-		56	none	-	-	Average (of DGAC and PCC)	0
12+478		46425	Auxiliary Vehicle	-	-	-			56	none	-	-	Average (of DGAC and PCC)	0
12+627		*40935*	*Total*	-		*2729*	-	-		*Traffic light*	*0*	-	*Average (of DGAC and PCC)*	*0*
12+627		40935	Automobiles	-		1593	-		56	Traffic light	0	-	Average (of DGAC and PCC)	0
12+627		40935	Medium trucks	-		973	-		56	Traffic light	0	-	Average (of DGAC and PCC)	0
12+627		40935	Heavy trucks	-		128	-		56	Traffic light	0	-	Average (of DGAC and PCC)	0
12+627		40935	Buses	-		18	-		56	Traffic light	0	-	Average (of DGAC and PCC)	0
12+627		40935	Motorcycles	-		17	-		56	Traffic light	0	-	Average (of DGAC and PCC)	0
12+627		40935	Auxiliary Vehicle	-	-	-			56	Traffic light	0	-	Average (of DGAC and PCC)	0
13+037		*40935*	*Total*	-		*2729*	-	-		*none*	-	-	*Average (of DGAC and PCC)*	*0*
13+037		40935	Automobiles	-		1593	-		56	none	-	-	Average (of DGAC and PCC)	0
13+037		40935	Medium trucks	-		973	-		56	none	-	-	Average (of DGAC and PCC)	0
13+037		40935	Heavy trucks	-		128	-		56	none	-	-	Average (of DGAC and PCC)	0
13+037		40935	Buses	-		18	-		56	none	-	-	Average (of DGAC and PCC)	0
13+037		40935	Motorcycles	-		17	-		56	none	-	-	Average (of DGAC and PCC)	0
13+037		40935	Auxiliary Vehicle	-	-	-			56	none	-	-	Average (of DGAC and PCC)	0
13+185		*40935*	*Total*	-		*2729*	-	-		*none*	-	-	*Average (of DGAC and PCC)*	*0*
13+185		40935	Automobiles	-		1593	-		56	none	-	-	Average (of DGAC and PCC)	0
13+185		40935	Medium trucks	-		973	-		56	none	-	-	Average (of DGAC and PCC)	0
13+185		40935	Heavy trucks	-		128	-		56	none	-	-	Average (of DGAC and PCC)	0
13+185		40935	Buses	-		18	-		56	none	-	-	Average (of DGAC and PCC)	0
13+185		40935	Motorcycles	-		17	-		56	none	-	-	Average (of DGAC and PCC)	0
13+185		40935	Auxiliary Vehicle	-	-	-			56	none	-	-	Average (of DGAC and PCC)	0
14+121		*40935*	*Total*	-		*2729*	-	-		*none*	-	-	*Average (of DGAC and PCC)*	*0*
14+121		40935	Automobiles	-		1593	-		56	none	-	-	Average (of DGAC and PCC)	0
14+121		40935	Medium trucks	-		973	-		56	none	-	-	Average (of DGAC and PCC)	0
14+121		40935	Heavy trucks	-		128	-		56	none	-	-	Average (of DGAC and PCC)	0
14+121		40935	Buses	-		18	-		56	none	-	-	Average (of DGAC and PCC)	0
14+121		40935	Motorcycles	-		17	-		56	none	-	-	Average (of DGAC and PCC)	0
14+121		40935	Auxiliary Vehicle	-	-	-			56	none	-	-	Average (of DGAC and PCC)	0
14+203		*40935*	*Total*	-		*2729*	-	-		*none*	-	-	*Average (of DGAC and PCC)*	*0*
14+203		40935	Automobiles	-		1593	-		56	none	-	-	Average (of DGAC and PCC)	0
14+203		40935	Medium trucks	-		973	-		56	none	-	-	Average (of DGAC and PCC)	0
14+203		40935	Heavy trucks	-		128	-		56	none	-	-	Average (of DGAC and PCC)	0
14+203		40935	Buses	-		18	-		56	none	-	-	Average (of DGAC and PCC)	0
14+203		40935	Motorcycles	-		17	-		56	none	-	-	Average (of DGAC and PCC)	0
14+203		40935	Auxiliary Vehicle	-	-	-			56	none	-	-	Average (of DGAC and PCC)	0
14+325		*40935*	*Total*	-		*2729*	-	-		*none*	-	-	*Average (of DGAC and PCC)*	*0*
14+325		40935	Automobiles	-		1593	-		56	none	-	-	Average (of DGAC and PCC)	0
14+325		40935	Medium trucks	-		973	-		56	none	-	-	Average (of DGAC and PCC)	0
14+325		40935	Heavy trucks	-		128	-		56	none	-	-	Average (of DGAC and PCC)	0
14+325		40935	Buses	-		18	-		56	none	-	-	Average (of DGAC and PCC)	0
14+325		40935	Motorcycles	-		17	-		56	none	-	-	Average (of DGAC and PCC)	0
14+325		40935	Auxiliary Vehicle	-	-	-			56	none	-	-	Average (of DGAC and PCC)	0
14+463	-									-	-	-	-	-
0+000		*40935*	*Total*	-		*2729*	-	-		*none*	-	-	*Average (of DGAC and PCC)*	*0*
0+000		40935	Automobiles	-		1593	-		56	none	-	-	Average (of DGAC and PCC)	0
0+000		40935	Medium trucks	-		973	-		56	none	-	-	Average (of DGAC and PCC)	0
0+000		40935	Heavy trucks	-		128	-		56	none	-	-	Average (of DGAC and PCC)	0
0+000		40935	Buses	-		18	-		56	none	-	-	Average (of DGAC and PCC)	0
0+000		40935	Motorcycles	-		17	-		56	none	-	-	Average (of DGAC and PCC)	0
0+000		40935	Auxiliary Vehicle	-	-	-			56	none	-	-	Average (of DGAC and PCC)	0
Valley Mall SB	Traffic direction:	In entry direction												
10+304		*2190*	*Total*	-		*146*	-	-		*none*	-	-	*Average (of DGAC and PCC)*	*0*
10+304		2190	Automobiles	-		85	-		40	none	-	-	Average (of DGAC and PCC)	0
10+304		2190	Medium trucks	-		52	-		40	none	-	-	Average (of DGAC and PCC)	0
10+304		2190	Heavy trucks	-		7	-		40	none	-	-	Average (of DGAC and PCC)	0
10+304		2190	Buses	-		1	-		40	none	-	-	Average (of DGAC and PCC)	0

10+304		2190	Motorcycles	-		1	-		40	none	-	-	Average (of DGAC and PCC)	0
10+304		2190	Auxiliary Vehicle	-	-	-			40	none	-	-	Average (of DGAC and PCC)	0
10+378		*2190*	*Total*	-		*146*	-	-		*none*	-	-	*Average (of DGAC and PCC)*	*0*
10+378		2190	Automobiles	-		85	-		40	none	-	-	Average (of DGAC and PCC)	0
10+378		2190	Medium trucks	-		52	-		40	none	-	-	Average (of DGAC and PCC)	0
10+378		2190	Heavy trucks	-		7	-		40	none	-	-	Average (of DGAC and PCC)	0
10+378		2190	Buses	-		1	-		40	none	-	-	Average (of DGAC and PCC)	0
10+378		2190	Motorcycles	-		1	-		40	none	-	-	Average (of DGAC and PCC)	0
10+378		2190	Auxiliary Vehicle	-	-	-			40	none	-	-	Average (of DGAC and PCC)	0
10+931		*2190*	*Total*	-		*146*	-	-		*none*	-	-	*Average (of DGAC and PCC)*	*0*
10+931		2190	Automobiles	-		85	-		40	none	-	-	Average (of DGAC and PCC)	0
10+931		2190	Medium trucks	-		52	-		40	none	-	-	Average (of DGAC and PCC)	0
10+931		2190	Heavy trucks	-		7	-		40	none	-	-	Average (of DGAC and PCC)	0
10+931		2190	Buses	-		1	-		40	none	-	-	Average (of DGAC and PCC)	0
10+931		2190	Motorcycles	-		1	-		40	none	-	-	Average (of DGAC and PCC)	0
10+931		2190	Auxiliary Vehicle	-	-	-			40	none	-	-	Average (of DGAC and PCC)	0
11+490	-									-	-	-	-	-
Ramona Blvd EB		Traffic direction:		In entry direction										
10+304		*13995*	*Total*	-		*933*	-	-		*Traffic light*	*0*	-	*Average (of DGAC and PCC)*	*0*
10+304		13995	Automobiles	-		544	-		56	Traffic light	0	-	Average (of DGAC and PCC)	0
10+304		13995	Medium trucks	-		332	-		56	Traffic light	0	-	Average (of DGAC and PCC)	0
10+304		13995	Heavy trucks	-		44	-		56	Traffic light	0	-	Average (of DGAC and PCC)	0
10+304		13995	Buses	-		7	-		56	Traffic light	0	-	Average (of DGAC and PCC)	0
10+304		13995	Motorcycles	-		6	-		56	Traffic light	0	-	Average (of DGAC and PCC)	0
10+304		13995	Auxiliary Vehicle	-	-	-			56	Traffic light	0	-	Average (of DGAC and PCC)	0
11+003		*15780*	*Total*	-		*1052*	-	-		*Traffic light*	*0*	-	*Average (of DGAC and PCC)*	*0*
11+003		15780	Automobiles	-		614	-		56	Traffic light	0	-	Average (of DGAC and PCC)	0
11+003		15780	Medium trucks	-		375	-		56	Traffic light	0	-	Average (of DGAC and PCC)	0
11+003		15780	Heavy trucks	-		49	-		56	Traffic light	0	-	Average (of DGAC and PCC)	0
11+003		15780	Buses	-		7	-		56	Traffic light	0	-	Average (of DGAC and PCC)	0
11+003		15780	Motorcycles	-		7	-		56	Traffic light	0	-	Average (of DGAC and PCC)	0
11+003		15780	Auxiliary Vehicle	-	-	-			56	Traffic light	0	-	Average (of DGAC and PCC)	0
11+209		*15780*	*Total*	-		*1052*	-	-		*none*	-	-	*Average (of DGAC and PCC)*	*0*
11+209		15780	Automobiles	-		614	-		56	none	-	-	Average (of DGAC and PCC)	0
11+209		15780	Medium trucks	-		375	-		56	none	-	-	Average (of DGAC and PCC)	0
11+209		15780	Heavy trucks	-		49	-		56	none	-	-	Average (of DGAC and PCC)	0
11+209		15780	Buses	-		7	-		56	none	-	-	Average (of DGAC and PCC)	0
11+209		15780	Motorcycles	-		7	-		56	none	-	-	Average (of DGAC and PCC)	0
11+209		15780	Auxiliary Vehicle	-	-	-			56	none	-	-	Average (of DGAC and PCC)	0
11+417		*22830*	*Total*	-		*1522*	-	-		*Traffic light*	*0*	-	*Average (of DGAC and PCC)*	*0*
11+417		22830	Automobiles	-		888	-		56	Traffic light	0	-	Average (of DGAC and PCC)	0
11+417		22830	Medium trucks	-		542	-		56	Traffic light	0	-	Average (of DGAC and PCC)	0
11+417		22830	Heavy trucks	-		71	-		56	Traffic light	0	-	Average (of DGAC and PCC)	0
11+417		22830	Buses	-		11	-		56	Traffic light	0	-	Average (of DGAC and PCC)	0
11+417		22830	Motorcycles	-		10	-		56	Traffic light	0	-	Average (of DGAC and PCC)	0
11+417		22830	Auxiliary Vehicle	-	-	-			56	Traffic light	0	-	Average (of DGAC and PCC)	0
11+683		*22830*	*Total*	-		*1522*	-	-		*none*	-	-	*Average (of DGAC and PCC)*	*0*
11+683		22830	Automobiles	-		888	-		56	none	-	-	Average (of DGAC and PCC)	0
11+683		22830	Medium trucks	-		542	-		56	none	-	-	Average (of DGAC and PCC)	0
11+683		22830	Heavy trucks	-		71	-		56	none	-	-	Average (of DGAC and PCC)	0
11+683		22830	Buses	-		11	-		56	none	-	-	Average (of DGAC and PCC)	0
11+683		22830	Motorcycles	-		10	-		56	none	-	-	Average (of DGAC and PCC)	0
11+683		22830	Auxiliary Vehicle	-	-	-			56	none	-	-	Average (of DGAC and PCC)	0
12+563		*33540*	*Total*	-		*2236*	-	-		*Traffic light*	*0*	-	*Average (of DGAC and PCC)*	*0*
12+563		33540	Automobiles	-		1305	-		56	Traffic light	0	-	Average (of DGAC and PCC)	0
12+563		33540	Medium trucks	-		797	-		56	Traffic light	0	-	Average (of DGAC and PCC)	0
12+563		33540	Heavy trucks	-		105	-		56	Traffic light	0	-	Average (of DGAC and PCC)	0
12+563		33540	Buses	-		15	-		56	Traffic light	0	-	Average (of DGAC and PCC)	0

12+563	33540	Motorcycles	-	14	-	56	Traffic light	0	-	Average (of DGAC and PCC)	0
12+563	33540	Auxiliary Vehicle	-	-	-	56	Traffic light	0	-	Average (of DGAC and PCC)	0
14+595	*36375*	*Total*	-	*2425*	-	-	*Traffic light*	*0*	-	*Average (of DGAC and PCC)*	*0*
14+595	36375	Automobiles	-	1416	-	56	Traffic light	0	-	Average (of DGAC and PCC)	0
14+595	36375	Medium trucks	-	864	-	56	Traffic light	0	-	Average (of DGAC and PCC)	0
14+595	36375	Heavy trucks	-	114	-	56	Traffic light	0	-	Average (of DGAC and PCC)	0
14+595	36375	Buses	-	16	-	56	Traffic light	0	-	Average (of DGAC and PCC)	0
14+595	36375	Motorcycles	-	15	-	56	Traffic light	0	-	Average (of DGAC and PCC)	0
14+595	36375	Auxiliary Vehicle	-	-	-	56	Traffic light	0	-	Average (of DGAC and PCC)	0
15+120	*36150*	*Total*	-	*2410*	-	-	*Traffic light*	*0*	-	*Average (of DGAC and PCC)*	*0*
15+120	36150	Automobiles	-	1407	-	56	Traffic light	0	-	Average (of DGAC and PCC)	0
15+120	36150	Medium trucks	-	859	-	56	Traffic light	0	-	Average (of DGAC and PCC)	0
15+120	36150	Heavy trucks	-	113	-	56	Traffic light	0	-	Average (of DGAC and PCC)	0
15+120	36150	Buses	-	16	-	56	Traffic light	0	-	Average (of DGAC and PCC)	0
15+120	36150	Motorcycles	-	15	-	56	Traffic light	0	-	Average (of DGAC and PCC)	0
15+120	36150	Auxiliary Vehicle	-	-	-	56	Traffic light	0	-	Average (of DGAC and PCC)	0
15+353	-						-	-	-	-	-
0+000	*36150*	*Total*	-	*2410*	-	-	*Traffic light*	*0*	-	*Average (of DGAC and PCC)*	*0*
0+000	36150	Automobiles	-	1407	-	56	Traffic light	0	-	Average (of DGAC and PCC)	0
0+000	36150	Medium trucks	-	859	-	56	Traffic light	0	-	Average (of DGAC and PCC)	0
0+000	36150	Heavy trucks	-	113	-	56	Traffic light	0	-	Average (of DGAC and PCC)	0
0+000	36150	Buses	-	16	-	56	Traffic light	0	-	Average (of DGAC and PCC)	0
0+000	36150	Motorcycles	-	15	-	56	Traffic light	0	-	Average (of DGAC and PCC)	0
0+000	36150	Auxiliary Vehicle	-	-	-	56	Traffic light	0	-	Average (of DGAC and PCC)	0
Ramona Blvd WB	Traffic direction:	In entry direction									
10+304	*34530*	*Total*	-	*2302*	-	-	*none*	-	-	*Average (of DGAC and PCC)*	*0*
10+304	34530	Automobiles	-	1343	-	56	none	-	-	Average (of DGAC and PCC)	0
10+304	34530	Medium trucks	-	820	-	56	none	-	-	Average (of DGAC and PCC)	0
10+304	34530	Heavy trucks	-	108	-	56	none	-	-	Average (of DGAC and PCC)	0
10+304	34530	Buses	-	16	-	56	none	-	-	Average (of DGAC and PCC)	0
10+304	34530	Motorcycles	-	15	-	56	none	-	-	Average (of DGAC and PCC)	0
10+304	34530	Auxiliary Vehicle	-	-	-	56	none	-	-	Average (of DGAC and PCC)	0
10+516	*34530*	*Total*	-	*2302*	-	-	*Traffic light*	*0*	-	*Average (of DGAC and PCC)*	*0*
10+516	34530	Automobiles	-	1343	-	56	Traffic light	0	-	Average (of DGAC and PCC)	0
10+516	34530	Medium trucks	-	820	-	56	Traffic light	0	-	Average (of DGAC and PCC)	0
10+516	34530	Heavy trucks	-	108	-	56	Traffic light	0	-	Average (of DGAC and PCC)	0
10+516	34530	Buses	-	16	-	56	Traffic light	0	-	Average (of DGAC and PCC)	0
10+516	34530	Motorcycles	-	15	-	56	Traffic light	0	-	Average (of DGAC and PCC)	0
10+516	34530	Auxiliary Vehicle	-	-	-	56	Traffic light	0	-	Average (of DGAC and PCC)	0
11+050	*33120*	*Total*	-	*2208*	-	-	*Traffic light*	*0*	-	*Average (of DGAC and PCC)*	*0*
11+050	33120	Automobiles	-	1289	-	56	Traffic light	0	-	Average (of DGAC and PCC)	0
11+050	33120	Medium trucks	-	787	-	56	Traffic light	0	-	Average (of DGAC and PCC)	0
11+050	33120	Heavy trucks	-	103	-	56	Traffic light	0	-	Average (of DGAC and PCC)	0
11+050	33120	Buses	-	15	-	56	Traffic light	0	-	Average (of DGAC and PCC)	0
11+050	33120	Motorcycles	-	14	-	56	Traffic light	0	-	Average (of DGAC and PCC)	0
11+050	33120	Auxiliary Vehicle	-	-	-	56	Traffic light	0	-	Average (of DGAC and PCC)	0
13+093	*27570*	*Total*	-	*1838*	-	-	*Traffic light*	*0*	-	*Average (of DGAC and PCC)*	*0*
13+093	27570	Automobiles	-	1072	-	56	Traffic light	0	-	Average (of DGAC and PCC)	0
13+093	27570	Medium trucks	-	655	-	56	Traffic light	0	-	Average (of DGAC and PCC)	0
13+093	27570	Heavy trucks	-	86	-	56	Traffic light	0	-	Average (of DGAC and PCC)	0
13+093	27570	Buses	-	13	-	56	Traffic light	0	-	Average (of DGAC and PCC)	0
13+093	27570	Motorcycles	-	12	-	56	Traffic light	0	-	Average (of DGAC and PCC)	0
13+093	27570	Auxiliary Vehicle	-	-	-	56	Traffic light	0	-	Average (of DGAC and PCC)	0
13+951	*27570*	*Total*	-	*1838*	-	-	*none*	-	-	*Average (of DGAC and PCC)*	*0*
13+951	27570	Automobiles	-	1072	-	56	none	-	-	Average (of DGAC and PCC)	0
13+951	27570	Medium trucks	-	655	-	56	none	-	-	Average (of DGAC and PCC)	0
13+951	27570	Heavy trucks	-	86	-	56	none	-	-	Average (of DGAC and PCC)	0
13+951	27570	Buses	-	13	-	56	none	-	-	Average (of DGAC and PCC)	0

13+951	27570	Motorcycles	-	12	-	56	none	-	-	Average (of DGAC and PCC)	0
13+951	27570	Auxiliary Vehicle	-	-	-	56	none	-	-	Average (of DGAC and PCC)	0
14+222	*16800*	*Total*	-	*1120*	-	-	*Traffic light*	*0*	-	*Average (of DGAC and PCC)*	*0*
14+222	16800	Automobiles	-	653	-	56	Traffic light	0	-	Average (of DGAC and PCC)	0
14+222	16800	Medium trucks	-	399	-	56	Traffic light	0	-	Average (of DGAC and PCC)	0
14+222	16800	Heavy trucks	-	53	-	56	Traffic light	0	-	Average (of DGAC and PCC)	0
14+222	16800	Buses	-	8	-	56	Traffic light	0	-	Average (of DGAC and PCC)	0
14+222	16800	Motorcycles	-	7	-	56	Traffic light	0	-	Average (of DGAC and PCC)	0
14+222	16800	Auxiliary Vehicle	-	-	-	56	Traffic light	0	-	Average (of DGAC and PCC)	0
14+437	*16800*	*Total*	-	*1120*	-	-	*none*	-	-	*Average (of DGAC and PCC)*	*0*
14+437	16800	Automobiles	-	653	-	56	none	-	-	Average (of DGAC and PCC)	0
14+437	16800	Medium trucks	-	399	-	56	none	-	-	Average (of DGAC and PCC)	0
14+437	16800	Heavy trucks	-	53	-	56	none	-	-	Average (of DGAC and PCC)	0
14+437	16800	Buses	-	8	-	56	none	-	-	Average (of DGAC and PCC)	0
14+437	16800	Motorcycles	-	7	-	56	none	-	-	Average (of DGAC and PCC)	0
14+437	16800	Auxiliary Vehicle	-	-	-	56	none	-	-	Average (of DGAC and PCC)	0
14+633	*16020*	*Total*	-	*1068*	-	-	*Traffic light*	*0*	-	*Average (of DGAC and PCC)*	*0*
14+633	16020	Automobiles	-	623	-	56	Traffic light	0	-	Average (of DGAC and PCC)	0
14+633	16020	Medium trucks	-	380	-	56	Traffic light	0	-	Average (of DGAC and PCC)	0
14+633	16020	Heavy trucks	-	50	-	56	Traffic light	0	-	Average (of DGAC and PCC)	0
14+633	16020	Buses	-	8	-	56	Traffic light	0	-	Average (of DGAC and PCC)	0
14+633	16020	Motorcycles	-	7	-	56	Traffic light	0	-	Average (of DGAC and PCC)	0
14+633	16020	Auxiliary Vehicle	-	-	-	56	Traffic light	0	-	Average (of DGAC and PCC)	0
15+348	-						-	-	-	-	-
0+000	*16680*	*Total*	-	*1112*	-	-	*Traffic light*	*0*	-	*Average (of DGAC and PCC)*	*0*
0+000	16680	Automobiles	-	649	-	56	Traffic light	0	-	Average (of DGAC and PCC)	0
0+000	16680	Medium trucks	-	396	-	56	Traffic light	0	-	Average (of DGAC and PCC)	0
0+000	16680	Heavy trucks	-	52	-	56	Traffic light	0	-	Average (of DGAC and PCC)	0
0+000	16680	Buses	-	8	-	56	Traffic light	0	-	Average (of DGAC and PCC)	0
0+000	16680	Motorcycles	-	7	-	56	Traffic light	0	-	Average (of DGAC and PCC)	0
0+000	16680	Auxiliary Vehicle	-	-	-	56	Traffic light	0	-	Average (of DGAC and PCC)	0
Peck Rd SB	Traffic direction:	In entry direction									
10+304	*39945*	*Total*	-	*2663*	-	-	*none*	-	-	*Average (of DGAC and PCC)*	*0*
10+304	39945	Automobiles	-	1554	-	56	none	-	-	Average (of DGAC and PCC)	0
10+304	39945	Medium trucks	-	949	-	56	none	-	-	Average (of DGAC and PCC)	0
10+304	39945	Heavy trucks	-	125	-	56	none	-	-	Average (of DGAC and PCC)	0
10+304	39945	Buses	-	18	-	56	none	-	-	Average (of DGAC and PCC)	0
10+304	39945	Motorcycles	-	17	-	56	none	-	-	Average (of DGAC and PCC)	0
10+304	39945	Auxiliary Vehicle	-	-	-	56	none	-	-	Average (of DGAC and PCC)	0
10+796	*39945*	*Total*	-	*2663*	-	-	*Traffic light*	*0*	-	*Average (of DGAC and PCC)*	*0*
10+796	39945	Automobiles	-	1554	-	56	Traffic light	0	-	Average (of DGAC and PCC)	0
10+796	39945	Medium trucks	-	949	-	56	Traffic light	0	-	Average (of DGAC and PCC)	0
10+796	39945	Heavy trucks	-	125	-	56	Traffic light	0	-	Average (of DGAC and PCC)	0
10+796	39945	Buses	-	18	-	56	Traffic light	0	-	Average (of DGAC and PCC)	0
10+796	39945	Motorcycles	-	17	-	56	Traffic light	0	-	Average (of DGAC and PCC)	0
10+796	39945	Auxiliary Vehicle	-	-	-	56	Traffic light	0	-	Average (of DGAC and PCC)	0
13+264	*45525*	*Total*	-	*3035*	-	-	*Traffic light*	*0*	-	*Average (of DGAC and PCC)*	*0*
13+264	45525	Automobiles	-	1772	-	56	Traffic light	0	-	Average (of DGAC and PCC)	0
13+264	45525	Medium trucks	-	1082	-	56	Traffic light	0	-	Average (of DGAC and PCC)	0
13+264	45525	Heavy trucks	-	142	-	56	Traffic light	0	-	Average (of DGAC and PCC)	0
13+264	45525	Buses	-	20	-	56	Traffic light	0	-	Average (of DGAC and PCC)	0
13+264	45525	Motorcycles	-	19	-	56	Traffic light	0	-	Average (of DGAC and PCC)	0
13+264	45525	Auxiliary Vehicle	-	-	-	56	Traffic light	0	-	Average (of DGAC and PCC)	0
13+395	*45525*	*Total*	-	*3035*	-	-	*none*	-	-	*Average (of DGAC and PCC)*	*0*
13+395	45525	Automobiles	-	1772	-	56	none	-	-	Average (of DGAC and PCC)	0
13+395	45525	Medium trucks	-	1082	-	56	none	-	-	Average (of DGAC and PCC)	0
13+395	45525	Heavy trucks	-	142	-	56	none	-	-	Average (of DGAC and PCC)	0
13+395	45525	Buses	-	20	-	56	none	-	-	Average (of DGAC and PCC)	0

13+395	45525	Motorcycles	-	19	-	56	none	-	-	Average (of DGAC and PCC)	0
13+395	45525	Auxiliary Vehicle	-	-	-	56	none	-	-	Average (of DGAC and PCC)	0
13+528	*45525*	*Total*	-	*3035*	-	-	*none*	-	-	*Average (of DGAC and PCC)*	*0*
13+528	45525	Automobiles	-	1772	-	56	none	-	-	Average (of DGAC and PCC)	0
13+528	45525	Medium trucks	-	1082	-	56	none	-	-	Average (of DGAC and PCC)	0
13+528	45525	Heavy trucks	-	142	-	56	none	-	-	Average (of DGAC and PCC)	0
13+528	45525	Buses	-	20	-	56	none	-	-	Average (of DGAC and PCC)	0
13+528	45525	Motorcycles	-	19	-	56	none	-	-	Average (of DGAC and PCC)	0
13+528	45525	Auxiliary Vehicle	-	-	-	56	none	-	-	Average (of DGAC and PCC)	0
14+172	*51300*	*Total*	-	*3420*	-	-	*Traffic light*	*0*	-	*Average (of DGAC and PCC)*	*0*
14+172	51300	Automobiles	-	1996	-	56	Traffic light	0	-	Average (of DGAC and PCC)	0
14+172	51300	Medium trucks	-	1219	-	56	Traffic light	0	-	Average (of DGAC and PCC)	0
14+172	51300	Heavy trucks	-	160	-	56	Traffic light	0	-	Average (of DGAC and PCC)	0
14+172	51300	Buses	-	23	-	56	Traffic light	0	-	Average (of DGAC and PCC)	0
14+172	51300	Motorcycles	-	22	-	56	Traffic light	0	-	Average (of DGAC and PCC)	0
14+172	51300	Auxiliary Vehicle	-	-	-	56	Traffic light	0	-	Average (of DGAC and PCC)	0
14+486	*51300*	*Total*	-	*3420*	-	-	*none*	-	-	*Average (of DGAC and PCC)*	*0*
14+486	51300	Automobiles	-	1996	-	56	none	-	-	Average (of DGAC and PCC)	0
14+486	51300	Medium trucks	-	1219	-	56	none	-	-	Average (of DGAC and PCC)	0
14+486	51300	Heavy trucks	-	160	-	56	none	-	-	Average (of DGAC and PCC)	0
14+486	51300	Buses	-	23	-	56	none	-	-	Average (of DGAC and PCC)	0
14+486	51300	Motorcycles	-	22	-	56	none	-	-	Average (of DGAC and PCC)	0
14+486	51300	Auxiliary Vehicle	-	-	-	56	none	-	-	Average (of DGAC and PCC)	0
14+669	*51300*	*Total*	-	*3420*	-	-	*none*	-	-	*Average (of DGAC and PCC)*	*0*
14+669	51300	Automobiles	-	1996	-	56	none	-	-	Average (of DGAC and PCC)	0
14+669	51300	Medium trucks	-	1219	-	56	none	-	-	Average (of DGAC and PCC)	0
14+669	51300	Heavy trucks	-	160	-	56	none	-	-	Average (of DGAC and PCC)	0
14+669	51300	Buses	-	23	-	56	none	-	-	Average (of DGAC and PCC)	0
14+669	51300	Motorcycles	-	22	-	56	none	-	-	Average (of DGAC and PCC)	0
14+669	51300	Auxiliary Vehicle	-	-	-	56	none	-	-	Average (of DGAC and PCC)	0
14+834	*51300*	*Total*	-	*3420*	-	-	*none*	-	-	*Average (of DGAC and PCC)*	*0*
14+834	51300	Automobiles	-	1996	-	56	none	-	-	Average (of DGAC and PCC)	0
14+834	51300	Medium trucks	-	1219	-	56	none	-	-	Average (of DGAC and PCC)	0
14+834	51300	Heavy trucks	-	160	-	56	none	-	-	Average (of DGAC and PCC)	0
14+834	51300	Buses	-	23	-	56	none	-	-	Average (of DGAC and PCC)	0
14+834	51300	Motorcycles	-	22	-	56	none	-	-	Average (of DGAC and PCC)	0
14+834	51300	Auxiliary Vehicle	-	-	-	56	none	-	-	Average (of DGAC and PCC)	0
15+091	*28080*	*Total*	-	*1872*	-	-	*Traffic light*	*0*	-	*Average (of DGAC and PCC)*	*0*
15+091	28080	Automobiles	-	1092	-	56	Traffic light	0	-	Average (of DGAC and PCC)	0
15+091	28080	Medium trucks	-	667	-	56	Traffic light	0	-	Average (of DGAC and PCC)	0
15+091	28080	Heavy trucks	-	88	-	56	Traffic light	0	-	Average (of DGAC and PCC)	0
15+091	28080	Buses	-	13	-	56	Traffic light	0	-	Average (of DGAC and PCC)	0
15+091	28080	Motorcycles	-	12	-	56	Traffic light	0	-	Average (of DGAC and PCC)	0
15+091	28080	Auxiliary Vehicle	-	-	-	56	Traffic light	0	-	Average (of DGAC and PCC)	0
15+669	-						-	-	-	-	-
0+000	*28080*	*Total*	-	*1872*	-	-	*none*	-	-	*Average (of DGAC and PCC)*	*0*
0+000	28080	Automobiles	-	1092	-	56	none	-	-	Average (of DGAC and PCC)	0
0+000	28080	Medium trucks	-	667	-	56	none	-	-	Average (of DGAC and PCC)	0
0+000	28080	Heavy trucks	-	88	-	56	none	-	-	Average (of DGAC and PCC)	0
0+000	28080	Buses	-	13	-	56	none	-	-	Average (of DGAC and PCC)	0
0+000	28080	Motorcycles	-	12	-	56	none	-	-	Average (of DGAC and PCC)	0
0+000	28080	Auxiliary Vehicle	-	-	-	56	none	-	-	Average (of DGAC and PCC)	0
Peck Rd NB	Traffic direction:	In entry direction									
10+304	*34830*	*Total*	-	*2322*	-	-	*none*	-	-	*Average (of DGAC and PCC)*	*0*
10+304	34830	Automobiles	-	1355	-	56	none	-	-	Average (of DGAC and PCC)	0
10+304	34830	Medium trucks	-	827	-	56	none	-	-	Average (of DGAC and PCC)	0
10+304	34830	Heavy trucks	-	109	-	56	none	-	-	Average (of DGAC and PCC)	0
10+304	34830	Buses	-	16	-	56	none	-	-	Average (of DGAC and PCC)	0

10+304	34830	Motorcycles	-		15	-		56	none	-	-	Average (of DGAC and PCC)	0
10+304	34830	Auxiliary Vehicle	-	-	-			56	none	-	-	Average (of DGAC and PCC)	0
10+866	*34830*	*Total*	-		*2322*	-	-		*Traffic light*	*0*	-	*Average (of DGAC and PCC)*	*0*
10+866	34830	Automobiles	-		1355	-		56	Traffic light	0	-	Average (of DGAC and PCC)	0
10+866	34830	Medium trucks	-		827	-		56	Traffic light	0	-	Average (of DGAC and PCC)	0
10+866	34830	Heavy trucks	-		109	-		56	Traffic light	0	-	Average (of DGAC and PCC)	0
10+866	34830	Buses	-		16	-		56	Traffic light	0	-	Average (of DGAC and PCC)	0
10+866	34830	Motorcycles	-		15	-		56	Traffic light	0	-	Average (of DGAC and PCC)	0
10+866	34830	Auxiliary Vehicle	-	-	-			56	Traffic light	0	-	Average (of DGAC and PCC)	0
11+164	*34830*	*Total*	-		*2322*	-	-		*none*	-	-	*Average (of DGAC and PCC)*	*0*
11+164	34830	Automobiles	-		1355	-		56	none	-	-	Average (of DGAC and PCC)	0
11+164	34830	Medium trucks	-		827	-		56	none	-	-	Average (of DGAC and PCC)	0
11+164	34830	Heavy trucks	-		109	-		56	none	-	-	Average (of DGAC and PCC)	0
11+164	34830	Buses	-		16	-		56	none	-	-	Average (of DGAC and PCC)	0
11+164	34830	Motorcycles	-		15	-		56	none	-	-	Average (of DGAC and PCC)	0
11+164	34830	Auxiliary Vehicle	-	-	-			56	none	-	-	Average (of DGAC and PCC)	0
11+298	*34830*	*Total*	-		*2322*	-	-		*none*	-	-	*Average (of DGAC and PCC)*	*0*
11+298	34830	Automobiles	-		1355	-		56	none	-	-	Average (of DGAC and PCC)	0
11+298	34830	Medium trucks	-		827	-		56	none	-	-	Average (of DGAC and PCC)	0
11+298	34830	Heavy trucks	-		109	-		56	none	-	-	Average (of DGAC and PCC)	0
11+298	34830	Buses	-		16	-		56	none	-	-	Average (of DGAC and PCC)	0
11+298	34830	Motorcycles	-		15	-		56	none	-	-	Average (of DGAC and PCC)	0
11+298	34830	Auxiliary Vehicle	-	-	-			56	none	-	-	Average (of DGAC and PCC)	0
11+487	*34830*	*Total*	-		*2322*	-	-		*none*	-	-	*Average (of DGAC and PCC)*	*0*
11+487	34830	Automobiles	-		1355	-		56	none	-	-	Average (of DGAC and PCC)	0
11+487	34830	Medium trucks	-		827	-		56	none	-	-	Average (of DGAC and PCC)	0
11+487	34830	Heavy trucks	-		109	-		56	none	-	-	Average (of DGAC and PCC)	0
11+487	34830	Buses	-		16	-		56	none	-	-	Average (of DGAC and PCC)	0
11+487	34830	Motorcycles	-		15	-		56	none	-	-	Average (of DGAC and PCC)	0
11+487	34830	Auxiliary Vehicle	-	-	-			56	none	-	-	Average (of DGAC and PCC)	0
11+756	*52815*	*Total*	-		*3521*	-	-		*Traffic light*	*0*	-	*Average (of DGAC and PCC)*	*0*
11+756	52815	Automobiles	-		2055	-		56	Traffic light	0	-	Average (of DGAC and PCC)	0
11+756	52815	Medium trucks	-		1255	-		56	Traffic light	0	-	Average (of DGAC and PCC)	0
11+756	52815	Heavy trucks	-		165	-		56	Traffic light	0	-	Average (of DGAC and PCC)	0
11+756	52815	Buses	-		24	-		56	Traffic light	0	-	Average (of DGAC and PCC)	0
11+756	52815	Motorcycles	-		22	-		56	Traffic light	0	-	Average (of DGAC and PCC)	0
11+756	52815	Auxiliary Vehicle	-	-	-			56	Traffic light	0	-	Average (of DGAC and PCC)	0
12+431	*52815*	*Total*	-		*3521*	-	-		*none*	-	-	*Average (of DGAC and PCC)*	*0*
12+431	52815	Automobiles	-		2055	-		56	none	-	-	Average (of DGAC and PCC)	0
12+431	52815	Medium trucks	-		1255	-		56	none	-	-	Average (of DGAC and PCC)	0
12+431	52815	Heavy trucks	-		165	-		56	none	-	-	Average (of DGAC and PCC)	0
12+431	52815	Buses	-		24	-		56	none	-	-	Average (of DGAC and PCC)	0
12+431	52815	Motorcycles	-		22	-		56	none	-	-	Average (of DGAC and PCC)	0
12+431	52815	Auxiliary Vehicle	-	-	-			56	none	-	-	Average (of DGAC and PCC)	0
12+568	*52815*	*Total*	-		*3521*	-	-		*none*	-	-	*Average (of DGAC and PCC)*	*0*
12+568	52815	Automobiles	-		2055	-		56	none	-	-	Average (of DGAC and PCC)	0
12+568	52815	Medium trucks	-		1255	-		56	none	-	-	Average (of DGAC and PCC)	0
12+568	52815	Heavy trucks	-		165	-		56	none	-	-	Average (of DGAC and PCC)	0
12+568	52815	Buses	-		24	-		56	none	-	-	Average (of DGAC and PCC)	0
12+568	52815	Motorcycles	-		22	-		56	none	-	-	Average (of DGAC and PCC)	0
12+568	52815	Auxiliary Vehicle	-	-	-			56	none	-	-	Average (of DGAC and PCC)	0
12+697	*50445*	*Total*	-		*3363*	-	-		*Traffic light*	*0*	-	*Average (of DGAC and PCC)*	*0*
12+697	50445	Automobiles	-		1963	-		56	Traffic light	0	-	Average (of DGAC and PCC)	0
12+697	50445	Medium trucks	-		1199	-		56	Traffic light	0	-	Average (of DGAC and PCC)	0
12+697	50445	Heavy trucks	-		157	-		56	Traffic light	0	-	Average (of DGAC and PCC)	0
12+697	50445	Buses	-		23	-		56	Traffic light	0	-	Average (of DGAC and PCC)	0
12+697	50445	Motorcycles	-		21	-		56	Traffic light	0	-	Average (of DGAC and PCC)	0
12+697	50445	Auxiliary Vehicle	-	-	-			56	Traffic light	0	-	Average (of DGAC and PCC)	0

15+162	*36930*	*Total*	-	*2462*	-	-	*Traffic light*	*0*	-	*Average (of DGAC and PCC)*	*0*
15+162	36930	Automobiles	-	1437	-		56	Traffic light	0	-	Average (of DGAC and PCC)	0
15+162	36930	Medium trucks	-	877	-		56	Traffic light	0	-	Average (of DGAC and PCC)	0
15+162	36930	Heavy trucks	-	115	-		56	Traffic light	0	-	Average (of DGAC and PCC)	0
15+162	36930	Buses	-	17	-		56	Traffic light	0	-	Average (of DGAC and PCC)	0
15+162	36930	Motorcycles	-	16	-		56	Traffic light	0	-	Average (of DGAC and PCC)	0
15+162	36930	Auxiliary Vehicle	-	-	-		56	Traffic light	0	-	Average (of DGAC and PCC)	0
15+669	-						-	-	-	-	-	
0+000	*36930*	*Total*	-	*2462*	-	-	*none*	-	-	*Average (of DGAC and PCC)*	*0*
0+000	36930	Automobiles	-	1437	-		56	none	-	-	Average (of DGAC and PCC)	0
0+000	36930	Medium trucks	-	877	-		56	none	-	-	Average (of DGAC and PCC)	0
0+000	36930	Heavy trucks	-	115	-		56	none	-	-	Average (of DGAC and PCC)	0
0+000	36930	Buses	-	17	-		56	none	-	-	Average (of DGAC and PCC)	0
0+000	36930	Motorcycles	-	16	-		56	none	-	-	Average (of DGAC and PCC)	0
0+000	36930	Auxiliary Vehicle	-	-	-		56	none	-	-	Average (of DGAC and PCC)	0
Roseglen St SB	Traffic direction:	In entry direction										
10+304	*1980*	*Total*	-	*132*	-	-	*none*	-	-	*Average (of DGAC and PCC)*	*0*
10+304	1980	Automobiles	-	76	-		48	none	-	-	Average (of DGAC and PCC)	0
10+304	1980	Medium trucks	-	47	-		48	none	-	-	Average (of DGAC and PCC)	0
10+304	1980	Heavy trucks	-	7	-		48	none	-	-	Average (of DGAC and PCC)	0
10+304	1980	Buses	-	1	-		48	none	-	-	Average (of DGAC and PCC)	0
10+304	1980	Motorcycles	-	1	-		48	none	-	-	Average (of DGAC and PCC)	0
10+304	1980	Auxiliary Vehicle	-	-	-		48	none	-	-	Average (of DGAC and PCC)	0
10+862	*1980*	*Total*	-	*132*	-	-	*none*	-	-	*Average (of DGAC and PCC)*	*0*
10+862	1980	Automobiles	-	76	-		48	none	-	-	Average (of DGAC and PCC)	0
10+862	1980	Medium trucks	-	47	-		48	none	-	-	Average (of DGAC and PCC)	0
10+862	1980	Heavy trucks	-	7	-		48	none	-	-	Average (of DGAC and PCC)	0
10+862	1980	Buses	-	1	-		48	none	-	-	Average (of DGAC and PCC)	0
10+862	1980	Motorcycles	-	1	-		48	none	-	-	Average (of DGAC and PCC)	0
10+862	1980	Auxiliary Vehicle	-	-	-		48	none	-	-	Average (of DGAC and PCC)	0
10+926	*1980*	*Total*	-	*132*	-	-	*none*	-	-	*Average (of DGAC and PCC)*	*0*
10+926	1980	Automobiles	-	76	-		48	none	-	-	Average (of DGAC and PCC)	0
10+926	1980	Medium trucks	-	47	-		48	none	-	-	Average (of DGAC and PCC)	0
10+926	1980	Heavy trucks	-	7	-		48	none	-	-	Average (of DGAC and PCC)	0
10+926	1980	Buses	-	1	-		48	none	-	-	Average (of DGAC and PCC)	0
10+926	1980	Motorcycles	-	1	-		48	none	-	-	Average (of DGAC and PCC)	0
10+926	1980	Auxiliary Vehicle	-	-	-		48	none	-	-	Average (of DGAC and PCC)	0
11+048	-						-	-	-	-	-	
0+000	*1980*	*Total*	-	*132*	-	-	*Traffic light*	*0*	-	*Average (of DGAC and PCC)*	*0*
0+000	1980	Automobiles	-	76	-		48	Traffic light	0	-	Average (of DGAC and PCC)	0
0+000	1980	Medium trucks	-	47	-		48	Traffic light	0	-	Average (of DGAC and PCC)	0
0+000	1980	Heavy trucks	-	7	-		48	Traffic light	0	-	Average (of DGAC and PCC)	0
0+000	1980	Buses	-	1	-		48	Traffic light	0	-	Average (of DGAC and PCC)	0
0+000	1980	Motorcycles	-	1	-		48	Traffic light	0	-	Average (of DGAC and PCC)	0
0+000	1980	Auxiliary Vehicle	-	-	-		48	Traffic light	0	-	Average (of DGAC and PCC)	0
Roseglen St NB	Traffic direction:	In entry direction										
10+304	*5835*	*Total*	-	*389*	-	-	*Traffic light*	*0*	-	*Average (of DGAC and PCC)*	*0*
10+304	5835	Automobiles	-	226	-		48	Traffic light	0	-	Average (of DGAC and PCC)	0
10+304	5835	Medium trucks	-	138	-		48	Traffic light	0	-	Average (of DGAC and PCC)	0
10+304	5835	Heavy trucks	-	19	-		48	Traffic light	0	-	Average (of DGAC and PCC)	0
10+304	5835	Buses	-	3	-		48	Traffic light	0	-	Average (of DGAC and PCC)	0
10+304	5835	Motorcycles	-	3	-		48	Traffic light	0	-	Average (of DGAC and PCC)	0
10+304	5835	Auxiliary Vehicle	-	-	-		48	Traffic light	0	-	Average (of DGAC and PCC)	0
10+430	*5835*	*Total*	-	*389*	-	-	*none*	-	-	*Average (of DGAC and PCC)*	*0*
10+430	5835	Automobiles	-	226	-		48	none	-	-	Average (of DGAC and PCC)	0
10+430	5835	Medium trucks	-	138	-		48	none	-	-	Average (of DGAC and PCC)	0
10+430	5835	Heavy trucks	-	19	-		48	none	-	-	Average (of DGAC and PCC)	0
10+430	5835	Buses	-	3	-		48	none	-	-	Average (of DGAC and PCC)	0

10+430		5835	Motorcycles	-		3	-		48	none	-	-	Average (of DGAC and PCC)	0
10+430		5835	Auxiliary Vehicle	-	-	-			48	none	-	-	Average (of DGAC and PCC)	0
10+489		*5835*	*Total*	-		*389*	-	-		*none*	-	-	*Average (of DGAC and PCC)*	*0*
10+489		5835	Automobiles	-		226	-		48	none	-	-	Average (of DGAC and PCC)	0
10+489		5835	Medium trucks	-		138	-		48	none	-	-	Average (of DGAC and PCC)	0
10+489		5835	Heavy trucks	-		19	-		48	none	-	-	Average (of DGAC and PCC)	0
10+489		5835	Buses	-		3	-		48	none	-	-	Average (of DGAC and PCC)	0
10+489		5835	Motorcycles	-		3	-		48	none	-	-	Average (of DGAC and PCC)	0
10+489		5835	Auxiliary Vehicle	-	-	-			48	none	-	-	Average (of DGAC and PCC)	0
11+054	-									-	-	-	-	-
0+000		*5835*	*Total*	-		*389*	-	-		*none*	-	-	*Average (of DGAC and PCC)*	*0*
0+000		5835	Automobiles	-		226	-		48	none	-	-	Average (of DGAC and PCC)	0
0+000		5835	Medium trucks	-		138	-		48	none	-	-	Average (of DGAC and PCC)	0
0+000		5835	Heavy trucks	-		19	-		48	none	-	-	Average (of DGAC and PCC)	0
0+000		5835	Buses	-		3	-		48	none	-	-	Average (of DGAC and PCC)	0
0+000		5835	Motorcycles	-		3	-		48	none	-	-	Average (of DGAC and PCC)	0
0+000		5835	Auxiliary Vehicle	-	-	-			48	none	-	-	Average (of DGAC and PCC)	0
Roseglen St NB1	Traffic direction:	In entry direction												
10+304		*1980*	*Total*	-		*132*	-	-		*Traffic light*	*0*	-	*Average (of DGAC and PCC)*	*0*
10+304		1980	Automobiles	-		76	-		48	Traffic light	0	-	Average (of DGAC and PCC)	0
10+304		1980	Medium trucks	-		47	-		48	Traffic light	0	-	Average (of DGAC and PCC)	0
10+304		1980	Heavy trucks	-		7	-		48	Traffic light	0	-	Average (of DGAC and PCC)	0
10+304		1980	Buses	-		1	-		48	Traffic light	0	-	Average (of DGAC and PCC)	0
10+304		1980	Motorcycles	-		1	-		48	Traffic light	0	-	Average (of DGAC and PCC)	0
10+304		1980	Auxiliary Vehicle	-	-	-			48	Traffic light	0	-	Average (of DGAC and PCC)	0
10+644		*1980*	*Total*	-		*132*	-	-		*none*	-	-	*Average (of DGAC and PCC)*	*0*
10+644		1980	Automobiles	-		76	-		48	none	-	-	Average (of DGAC and PCC)	0
10+644		1980	Medium trucks	-		47	-		48	none	-	-	Average (of DGAC and PCC)	0
10+644		1980	Heavy trucks	-		7	-		48	none	-	-	Average (of DGAC and PCC)	0
10+644		1980	Buses	-		1	-		48	none	-	-	Average (of DGAC and PCC)	0
10+644		1980	Motorcycles	-		1	-		48	none	-	-	Average (of DGAC and PCC)	0
10+644		1980	Auxiliary Vehicle	-	-	-			48	none	-	-	Average (of DGAC and PCC)	0
10+734		*1980*	*Total*	-		*132*	-	-		*none*	-	-	*Average (of DGAC and PCC)*	*0*
10+734		1980	Automobiles	-		76	-		48	none	-	-	Average (of DGAC and PCC)	0
10+734		1980	Medium trucks	-		47	-		48	none	-	-	Average (of DGAC and PCC)	0
10+734		1980	Heavy trucks	-		7	-		48	none	-	-	Average (of DGAC and PCC)	0
10+734		1980	Buses	-		1	-		48	none	-	-	Average (of DGAC and PCC)	0
10+734		1980	Motorcycles	-		1	-		48	none	-	-	Average (of DGAC and PCC)	0
10+734		1980	Auxiliary Vehicle	-	-	-			48	none	-	-	Average (of DGAC and PCC)	0
11+141	-									-	-	-	-	-
0+000		*1980*	*Total*	-		*132*	-	-		*none*	-	-	*Average (of DGAC and PCC)*	*0*
0+000		1980	Automobiles	-		76	-		48	none	-	-	Average (of DGAC and PCC)	0
0+000		1980	Medium trucks	-		47	-		48	none	-	-	Average (of DGAC and PCC)	0
0+000		1980	Heavy trucks	-		7	-		48	none	-	-	Average (of DGAC and PCC)	0
0+000		1980	Buses	-		1	-		48	none	-	-	Average (of DGAC and PCC)	0
0+000		1980	Motorcycles	-		1	-		48	none	-	-	Average (of DGAC and PCC)	0
0+000		1980	Auxiliary Vehicle	-	-	-			48	none	-	-	Average (of DGAC and PCC)	0
Durfee Ave NB	Traffic direction:	In entry direction												
10+304		*5835*	*Total*	-		*389*	-	-		*none*	-	-	*Average (of DGAC and PCC)*	*0*
10+304		5835	Automobiles	-		226	-		48	none	-	-	Average (of DGAC and PCC)	0
10+304		5835	Medium trucks	-		138	-		48	none	-	-	Average (of DGAC and PCC)	0
10+304		5835	Heavy trucks	-		19	-		48	none	-	-	Average (of DGAC and PCC)	0
10+304		5835	Buses	-		3	-		48	none	-	-	Average (of DGAC and PCC)	0
10+304		5835	Motorcycles	-		3	-		48	none	-	-	Average (of DGAC and PCC)	0
10+304		5835	Auxiliary Vehicle	-	-	-			48	none	-	-	Average (of DGAC and PCC)	0
10+709		*5835*	*Total*	-		*389*	-	-		*none*	-	-	*Average (of DGAC and PCC)*	*0*
10+709		5835	Automobiles	-		226	-		48	none	-	-	Average (of DGAC and PCC)	0
10+709		5835	Medium trucks	-		138	-		48	none	-	-	Average (of DGAC and PCC)	0

10+709		5835	Heavy trucks	-		19	-		48	none	-	-	Average (of DGAC and PCC)	0
10+709		5835	Buses	-		3	-		48	none	-	-	Average (of DGAC and PCC)	0
10+709		5835	Motorcycles	-		3	-		48	none	-	-	Average (of DGAC and PCC)	0
10+709		5835	Auxiliary Vehicle	-	-	-			48	none	-	-	Average (of DGAC and PCC)	0
10+819		*5835*	*Total*	-		*389*	-	-		*none*	-	-	*Average (of DGAC and PCC)*	*0*
10+819		5835	Automobiles	-		226	-		48	none	-	-	Average (of DGAC and PCC)	0
10+819		5835	Medium trucks	-		138	-		48	none	-	-	Average (of DGAC and PCC)	0
10+819		5835	Heavy trucks	-		19	-		48	none	-	-	Average (of DGAC and PCC)	0
10+819		5835	Buses	-		3	-		48	none	-	-	Average (of DGAC and PCC)	0
10+819		5835	Motorcycles	-		3	-		48	none	-	-	Average (of DGAC and PCC)	0
10+819		5835	Auxiliary Vehicle	-	-	-			48	none	-	-	Average (of DGAC and PCC)	0
11+146	-									-	-	-	-	-
0+000		*5835*	*Total*	-		*389*	-	-		*Traffic light*	*0*	-	*Average (of DGAC and PCC)*	*0*
0+000		5835	Automobiles	-		226	-		48	Traffic light	0	-	Average (of DGAC and PCC)	0
0+000		5835	Medium trucks	-		138	-		48	Traffic light	0	-	Average (of DGAC and PCC)	0
0+000		5835	Heavy trucks	-		19	-		48	Traffic light	0	-	Average (of DGAC and PCC)	0
0+000		5835	Buses	-		3	-		48	Traffic light	0	-	Average (of DGAC and PCC)	0
0+000		5835	Motorcycles	-		3	-		48	Traffic light	0	-	Average (of DGAC and PCC)	0
0+000		5835	Auxiliary Vehicle	-	-	-			48	Traffic light	0	-	Average (of DGAC and PCC)	0
Durfee Ave SB (South)		Traffic direction:		In entry direction										
10+304		*7530*	*Total*	-		*502*	-	-		*none*	-	-	*Average (of DGAC and PCC)*	*0*
10+304		7530	Automobiles	-		292	-		40	none	-	-	Average (of DGAC and PCC)	0
10+304		7530	Medium trucks	-		178	-		40	none	-	-	Average (of DGAC and PCC)	0
10+304		7530	Heavy trucks	-		24	-		40	none	-	-	Average (of DGAC and PCC)	0
10+304		7530	Buses	-		4	-		40	none	-	-	Average (of DGAC and PCC)	0
10+304		7530	Motorcycles	-		4	-		40	none	-	-	Average (of DGAC and PCC)	0
10+304		7530	Auxiliary Vehicle	-	-	-			40	none	-	-	Average (of DGAC and PCC)	0
11+006	-									-	-	-	-	-
0+000		*7530*	*Total*	-		*502*	-	-		*none*	-	-	*Average (of DGAC and PCC)*	*0*
0+000		7530	Automobiles	-		292	-		40	none	-	-	Average (of DGAC and PCC)	0
0+000		7530	Medium trucks	-		178	-		40	none	-	-	Average (of DGAC and PCC)	0
0+000		7530	Heavy trucks	-		24	-		40	none	-	-	Average (of DGAC and PCC)	0
0+000		7530	Buses	-		4	-		40	none	-	-	Average (of DGAC and PCC)	0
0+000		7530	Motorcycles	-		4	-		40	none	-	-	Average (of DGAC and PCC)	0
0+000		7530	Auxiliary Vehicle	-	-	-			40	none	-	-	Average (of DGAC and PCC)	0
Durfee Ave NB (South)		Traffic direction:		In entry direction										
10+304	-									-	-	-	-	0
11+002	-									-	-	-	-	-
0+000	-									-	-	-	-	0
Gilman Rd SB		Traffic direction:		In entry direction										
10+304		*7050*	*Total*	-		*470*	-	-		*Traffic light*	*0*	-	*Average (of DGAC and PCC)*	*0*
10+304		7050	Automobiles	-		274	-		40	Traffic light	0	-	Average (of DGAC and PCC)	0
10+304		7050	Medium trucks	-		167	-		40	Traffic light	0	-	Average (of DGAC and PCC)	0
10+304		7050	Heavy trucks	-		22	-		40	Traffic light	0	-	Average (of DGAC and PCC)	0
10+304		7050	Buses	-		4	-		40	Traffic light	0	-	Average (of DGAC and PCC)	0
10+304		7050	Motorcycles	-		3	-		40	Traffic light	0	-	Average (of DGAC and PCC)	0
10+304		7050	Auxiliary Vehicle	-	-	-			40	Traffic light	0	-	Average (of DGAC and PCC)	0
11+254	-									-	-	-	-	-
0+000		*7050*	*Total*	-		*470*	-	-		*none*	-	-	*Average (of DGAC and PCC)*	*0*
0+000		7050	Automobiles	-		274	-		40	none	-	-	Average (of DGAC and PCC)	0
0+000		7050	Medium trucks	-		167	-		40	none	-	-	Average (of DGAC and PCC)	0
0+000		7050	Heavy trucks	-		22	-		40	none	-	-	Average (of DGAC and PCC)	0
0+000		7050	Buses	-		4	-		40	none	-	-	Average (of DGAC and PCC)	0
0+000		7050	Motorcycles	-		3	-		40	none	-	-	Average (of DGAC and PCC)	0
0+000		7050	Auxiliary Vehicle	-	-	-			40	none	-	-	Average (of DGAC and PCC)	0
Gilman Rd NB		Traffic direction:		In entry direction										
10+304		*2310*	*Total*	-		*154*	-	-		*none*	-	-	*Average (of DGAC and PCC)*	*0*
10+304		2310	Automobiles	-		89	-		40	none	-	-	Average (of DGAC and PCC)	0

10+304	2310	Medium trucks	-	55	-	40	none	-	-	Average (of DGAC and PCC)	0
10+304	2310	Heavy trucks	-	8	-	40	none	-	-	Average (of DGAC and PCC)	0
10+304	2310	Buses	-	1	-	40	none	-	-	Average (of DGAC and PCC)	0
10+304	2310	Motorcycles	-	1	-	40	none	-	-	Average (of DGAC and PCC)	0
10+304	2310	Auxiliary Vehicle	-	-	-	40	none	-	-	Average (of DGAC and PCC)	0
11+260	-						-	-	-	-	-
0+000	*2310*	*Total*	-	*154*	-	-	*Traffic light*	*0*	-	*Average (of DGAC and PCC)*	*0*
0+000	2310	Automobiles	-	89	-	40	Traffic light	0	-	Average (of DGAC and PCC)	0
0+000	2310	Medium trucks	-	55	-	40	Traffic light	0	-	Average (of DGAC and PCC)	0
0+000	2310	Heavy trucks	-	8	-	40	Traffic light	0	-	Average (of DGAC and PCC)	0
0+000	2310	Buses	-	1	-	40	Traffic light	0	-	Average (of DGAC and PCC)	0
0+000	2310	Motorcycles	-	1	-	40	Traffic light	0	-	Average (of DGAC and PCC)	0
0+000	2310	Auxiliary Vehicle	-	-	-	40	Traffic light	0	-	Average (of DGAC and PCC)	0
I-10 EB	Traffic direction:	In entry direction									
10+304	*136095*	*Total*	-	*9073*	-	-	*none*	-	-	*Average (of DGAC and PCC)*	*0*
10+304	136095	Automobiles	-	5298	-	105	none	-	-	Average (of DGAC and PCC)	0
10+304	136095	Medium trucks	-	3235	-	105	none	-	-	Average (of DGAC and PCC)	0
10+304	136095	Heavy trucks	-	424	-	105	none	-	-	Average (of DGAC and PCC)	0
10+304	136095	Buses	-	60	-	105	none	-	-	Average (of DGAC and PCC)	0
10+304	136095	Motorcycles	-	56	-	105	none	-	-	Average (of DGAC and PCC)	0
10+304	136095	Auxiliary Vehicle	-	-	-	105	none	-	-	Average (of DGAC and PCC)	0
12+635	*171660*	*Total*	-	*11444*	-	-	*none*	-	-	*Average (of DGAC and PCC)*	*0*
12+635	171660	Automobiles	-	6683	-	105	none	-	-	Average (of DGAC and PCC)	0
12+635	171660	Medium trucks	-	4080	-	105	none	-	-	Average (of DGAC and PCC)	0
12+635	171660	Heavy trucks	-	534	-	105	none	-	-	Average (of DGAC and PCC)	0
12+635	171660	Buses	-	76	-	105	none	-	-	Average (of DGAC and PCC)	0
12+635	171660	Motorcycles	-	71	-	105	none	-	-	Average (of DGAC and PCC)	0
12+635	171660	Auxiliary Vehicle	-	-	-	105	none	-	-	Average (of DGAC and PCC)	0
17+769	*130110*	*Total*	-	*8674*	-	-	*none*	-	-	*Average (of DGAC and PCC)*	*0*
17+769	130110	Automobiles	-	5065	-	105	none	-	-	Average (of DGAC and PCC)	0
17+769	130110	Medium trucks	-	3092	-	105	none	-	-	Average (of DGAC and PCC)	0
17+769	130110	Heavy trucks	-	405	-	105	none	-	-	Average (of DGAC and PCC)	0
17+769	130110	Buses	-	58	-	105	none	-	-	Average (of DGAC and PCC)	0
17+769	130110	Motorcycles	-	54	-	105	none	-	-	Average (of DGAC and PCC)	0
17+769	130110	Auxiliary Vehicle	-	-	-	105	none	-	-	Average (of DGAC and PCC)	0
18+525	*130110*	*Total*	-	*8674*	-	-	*none*	-	-	*Average (of DGAC and PCC)*	*0*
18+525	130110	Automobiles	-	5065	-	105	none	-	-	Average (of DGAC and PCC)	0
18+525	130110	Medium trucks	-	3092	-	105	none	-	-	Average (of DGAC and PCC)	0
18+525	130110	Heavy trucks	-	405	-	105	none	-	-	Average (of DGAC and PCC)	0
18+525	130110	Buses	-	58	-	105	none	-	-	Average (of DGAC and PCC)	0
18+525	130110	Motorcycles	-	54	-	105	none	-	-	Average (of DGAC and PCC)	0
18+525	130110	Auxiliary Vehicle	-	-	-	105	none	-	-	Average (of DGAC and PCC)	0
19+393	*130110*	*Total*	-	*8674*	-	-	*none*	-	-	*Average (of DGAC and PCC)*	*0*
19+393	130110	Automobiles	-	5065	-	105	none	-	-	Average (of DGAC and PCC)	0
19+393	130110	Medium trucks	-	3092	-	105	none	-	-	Average (of DGAC and PCC)	0
19+393	130110	Heavy trucks	-	405	-	105	none	-	-	Average (of DGAC and PCC)	0
19+393	130110	Buses	-	58	-	105	none	-	-	Average (of DGAC and PCC)	0
19+393	130110	Motorcycles	-	54	-	105	none	-	-	Average (of DGAC and PCC)	0
19+393	130110	Auxiliary Vehicle	-	-	-	105	none	-	-	Average (of DGAC and PCC)	0
20+123	-						-	-	-	-	-
I-10 WB	Traffic direction:	In entry direction									
10+304	*139770*	*Total*	-	*9318*	-	-	*none*	-	-	*Average (of DGAC and PCC)*	*0*
10+304	139770	Automobiles	-	5441	-	105	none	-	-	Average (of DGAC and PCC)	0
10+304	139770	Medium trucks	-	3322	-	105	none	-	-	Average (of DGAC and PCC)	0
10+304	139770	Heavy trucks	-	435	-	105	none	-	-	Average (of DGAC and PCC)	0
10+304	139770	Buses	-	62	-	105	none	-	-	Average (of DGAC and PCC)	0
10+304	139770	Motorcycles	-	58	-	105	none	-	-	Average (of DGAC and PCC)	0
10+304	139770	Auxiliary Vehicle	-	-	-	105	none	-	-	Average (of DGAC and PCC)	0

12+623	*148980*	*Total*	-	*9932*	-	-	*none*	-	-	*Average (of DGAC and PCC)*	*0*
12+623	148980	Automobiles	-	5799	-	105	none	-	-	Average (of DGAC and PCC)	0
12+623	148980	Medium trucks	-	3541	-	105	none	-	-	Average (of DGAC and PCC)	0
12+623	148980	Heavy trucks	-	464	-	105	none	-	-	Average (of DGAC and PCC)	0
12+623	148980	Buses	-	66	-	105	none	-	-	Average (of DGAC and PCC)	0
12+623	148980	Motorcycles	-	62	-	105	none	-	-	Average (of DGAC and PCC)	0
12+623	148980	Auxiliary Vehicle	-	-	-	105	none	-	-	Average (of DGAC and PCC)	0
15+597	*131340*	*Total*	-	*8756*	-	-	*none*	-	-	*Average (of DGAC and PCC)*	*0*
15+597	131340	Automobiles	-	5113	-	105	none	-	-	Average (of DGAC and PCC)	0
15+597	131340	Medium trucks	-	3122	-	105	none	-	-	Average (of DGAC and PCC)	0
15+597	131340	Heavy trucks	-	409	-	105	none	-	-	Average (of DGAC and PCC)	0
15+597	131340	Buses	-	58	-	105	none	-	-	Average (of DGAC and PCC)	0
15+597	131340	Motorcycles	-	54	-	105	none	-	-	Average (of DGAC and PCC)	0
15+597	131340	Auxiliary Vehicle	-	-	-	105	none	-	-	Average (of DGAC and PCC)	0
20+122	-						-	-	-	-	-
0+000	*131340*	*Total*	-	*8756*	-	-	*none*	-	-	*Average (of DGAC and PCC)*	*0*
0+000	131340	Automobiles	-	5113	-	105	none	-	-	Average (of DGAC and PCC)	0
0+000	131340	Medium trucks	-	3122	-	105	none	-	-	Average (of DGAC and PCC)	0
0+000	131340	Heavy trucks	-	409	-	105	none	-	-	Average (of DGAC and PCC)	0
0+000	131340	Buses	-	58	-	105	none	-	-	Average (of DGAC and PCC)	0
0+000	131340	Motorcycles	-	54	-	105	none	-	-	Average (of DGAC and PCC)	0
0+000	131340	Auxiliary Vehicle	-	-	-	105	none	-	-	Average (of DGAC and PCC)	0
Valley Blvd EB	Traffic direction:	In entry direction									
2+808	*43665*	*Total*	-	*2911*	-	-	*none*	-	-	*Average (of DGAC and PCC)*	*0*
2+808	43665	Automobiles	-	1699	-	56	none	-	-	Average (of DGAC and PCC)	0
2+808	43665	Medium trucks	-	1038	-	56	none	-	-	Average (of DGAC and PCC)	0
2+808	43665	Heavy trucks	-	136	-	56	none	-	-	Average (of DGAC and PCC)	0
2+808	43665	Buses	-	20	-	56	none	-	-	Average (of DGAC and PCC)	0
2+808	43665	Motorcycles	-	18	-	56	none	-	-	Average (of DGAC and PCC)	0
2+808	43665	Auxiliary Vehicle	-	-	-	56	none	-	-	Average (of DGAC and PCC)	0
3+202	*43665*	*Total*	-	*2911*	-	-	*Traffic light*	*0*	-	*Average (of DGAC and PCC)*	*0*
3+202	43665	Automobiles	-	1699	-	56	Traffic light	0	-	Average (of DGAC and PCC)	0
3+202	43665	Medium trucks	-	1038	-	56	Traffic light	0	-	Average (of DGAC and PCC)	0
3+202	43665	Heavy trucks	-	136	-	56	Traffic light	0	-	Average (of DGAC and PCC)	0
3+202	43665	Buses	-	20	-	56	Traffic light	0	-	Average (of DGAC and PCC)	0
3+202	43665	Motorcycles	-	18	-	56	Traffic light	0	-	Average (of DGAC and PCC)	0
3+202	43665	Auxiliary Vehicle	-	-	-	56	Traffic light	0	-	Average (of DGAC and PCC)	0
4+173	*40185*	*Total*	-	*2679*	-	-	*Traffic light*	*0*	-	*Average (of DGAC and PCC)*	*0*
4+173	40185	Automobiles	-	1564	-	56	Traffic light	0	-	Average (of DGAC and PCC)	0
4+173	40185	Medium trucks	-	955	-	56	Traffic light	0	-	Average (of DGAC and PCC)	0
4+173	40185	Heavy trucks	-	125	-	56	Traffic light	0	-	Average (of DGAC and PCC)	0
4+173	40185	Buses	-	18	-	56	Traffic light	0	-	Average (of DGAC and PCC)	0
4+173	40185	Motorcycles	-	17	-	56	Traffic light	0	-	Average (of DGAC and PCC)	0
4+173	40185	Auxiliary Vehicle	-	-	-	56	Traffic light	0	-	Average (of DGAC and PCC)	0
5+211	*29550*	*Total*	-	*1970*	-	-	*Traffic light*	*0*	-	*Average (of DGAC and PCC)*	*0*
5+211	29550	Automobiles	-	1150	-	56	Traffic light	0	-	Average (of DGAC and PCC)	0
5+211	29550	Medium trucks	-	702	-	56	Traffic light	0	-	Average (of DGAC and PCC)	0
5+211	29550	Heavy trucks	-	92	-	56	Traffic light	0	-	Average (of DGAC and PCC)	0
5+211	29550	Buses	-	13	-	56	Traffic light	0	-	Average (of DGAC and PCC)	0
5+211	29550	Motorcycles	-	13	-	56	Traffic light	0	-	Average (of DGAC and PCC)	0
5+211	29550	Auxiliary Vehicle	-	-	-	56	Traffic light	0	-	Average (of DGAC and PCC)	0
6+870	*29550*	*Total*	-	*1970*	-	-	*none*	-	-	*Average (of DGAC and PCC)*	*0*
6+870	29550	Automobiles	-	1150	-	56	none	-	-	Average (of DGAC and PCC)	0
6+870	29550	Medium trucks	-	702	-	56	none	-	-	Average (of DGAC and PCC)	0
6+870	29550	Heavy trucks	-	92	-	56	none	-	-	Average (of DGAC and PCC)	0
6+870	29550	Buses	-	13	-	56	none	-	-	Average (of DGAC and PCC)	0
6+870	29550	Motorcycles	-	13	-	56	none	-	-	Average (of DGAC and PCC)	0
6+870	29550	Auxiliary Vehicle	-	-	-	56	none	-	-	Average (of DGAC and PCC)	0

6+923	*41565*	*Total*	-		*2771*	-	-	*Traffic light*	*0*	-	*Average (of DGAC and PCC)*	*0*
6+923	41565	Automobiles	-		1617	-		56 Traffic light	0	-	Average (of DGAC and PCC)	0
6+923	41565	Medium trucks	-		987	-		56 Traffic light	0	-	Average (of DGAC and PCC)	0
6+923	41565	Heavy trucks	-		130	-		56 Traffic light	0	-	Average (of DGAC and PCC)	0
6+923	41565	Buses	-		19	-		56 Traffic light	0	-	Average (of DGAC and PCC)	0
6+923	41565	Motorcycles	-		18	-		56 Traffic light	0	-	Average (of DGAC and PCC)	0
6+923	41565	Auxiliary Vehicle	-	-	-			56 Traffic light	0	-	Average (of DGAC and PCC)	0
7+613	*41085*	*Total*	-		*2739*	-	-	*Traffic light*	*0*	-	*Average (of DGAC and PCC)*	*0*
7+613	41085	Automobiles	-		1599	-		56 Traffic light	0	-	Average (of DGAC and PCC)	0
7+613	41085	Medium trucks	-		976	-		56 Traffic light	0	-	Average (of DGAC and PCC)	0
7+613	41085	Heavy trucks	-		128	-		56 Traffic light	0	-	Average (of DGAC and PCC)	0
7+613	41085	Buses	-		19	-		56 Traffic light	0	-	Average (of DGAC and PCC)	0
7+613	41085	Motorcycles	-		17	-		56 Traffic light	0	-	Average (of DGAC and PCC)	0
7+613	41085	Auxiliary Vehicle	-	-	-			56 Traffic light	0	-	Average (of DGAC and PCC)	0
8+136	*41085*	*Total*	-		*2739*	-	-	*none*	-	-	*Average (of DGAC and PCC)*	*0*
8+136	41085	Automobiles	-		1599	-		56 none	-	-	Average (of DGAC and PCC)	0
8+136	41085	Medium trucks	-		976	-		56 none	-	-	Average (of DGAC and PCC)	0
8+136	41085	Heavy trucks	-		128	-		56 none	-	-	Average (of DGAC and PCC)	0
8+136	41085	Buses	-		19	-		56 none	-	-	Average (of DGAC and PCC)	0
8+136	41085	Motorcycles	-		17	-		56 none	-	-	Average (of DGAC and PCC)	0
8+136	41085	Auxiliary Vehicle	-	-	-			56 none	-	-	Average (of DGAC and PCC)	0
8+496	*41085*	*Total*	-		*2739*	-	-	*none*	-	-	*Average (of DGAC and PCC)*	*0*
8+496	41085	Automobiles	-		1599	-		56 none	-	-	Average (of DGAC and PCC)	0
8+496	41085	Medium trucks	-		976	-		56 none	-	-	Average (of DGAC and PCC)	0
8+496	41085	Heavy trucks	-		128	-		56 none	-	-	Average (of DGAC and PCC)	0
8+496	41085	Buses	-		19	-		56 none	-	-	Average (of DGAC and PCC)	0
8+496	41085	Motorcycles	-		17	-		56 none	-	-	Average (of DGAC and PCC)	0
8+496	41085	Auxiliary Vehicle	-	-	-			56 none	-	-	Average (of DGAC and PCC)	0
8+965	*41085*	*Total*	-		*2739*	-	-	*none*	-	-	*Average (of DGAC and PCC)*	*0*
8+965	41085	Automobiles	-		1599	-		40 none	-	-	Average (of DGAC and PCC)	0
8+965	41085	Medium trucks	-		976	-		40 none	-	-	Average (of DGAC and PCC)	0
8+965	41085	Heavy trucks	-		128	-		40 none	-	-	Average (of DGAC and PCC)	0
8+965	41085	Buses	-		19	-		40 none	-	-	Average (of DGAC and PCC)	0
8+965	41085	Motorcycles	-		17	-		40 none	-	-	Average (of DGAC and PCC)	0
8+965	41085	Auxiliary Vehicle	-	-	-			40 none	-	-	Average (of DGAC and PCC)	0
9+092	*32010*	*Total*	-		*2134*	-	-	*Traffic light*	*0*	-	*Average (of DGAC and PCC)*	*0*
9+092	32010	Automobiles	-		1245	-		56 Traffic light	0	-	Average (of DGAC and PCC)	0
9+092	32010	Medium trucks	-		760	-		56 Traffic light	0	-	Average (of DGAC and PCC)	0
9+092	32010	Heavy trucks	-		100	-		56 Traffic light	0	-	Average (of DGAC and PCC)	0
9+092	32010	Buses	-		15	-		56 Traffic light	0	-	Average (of DGAC and PCC)	0
9+092	32010	Motorcycles	-		14	-		56 Traffic light	0	-	Average (of DGAC and PCC)	0
9+092	32010	Auxiliary Vehicle	-	-	-			56 Traffic light	0	-	Average (of DGAC and PCC)	0
9+209	*32010*	*Total*	-		*2134*	-	-	*none*	-	-	*Average (of DGAC and PCC)*	*0*
9+209	32010	Automobiles	-		1245	-		56 none	-	-	Average (of DGAC and PCC)	0
9+209	32010	Medium trucks	-		760	-		56 none	-	-	Average (of DGAC and PCC)	0
9+209	32010	Heavy trucks	-		100	-		56 none	-	-	Average (of DGAC and PCC)	0
9+209	32010	Buses	-		15	-		56 none	-	-	Average (of DGAC and PCC)	0
9+209	32010	Motorcycles	-		14	-		56 none	-	-	Average (of DGAC and PCC)	0
9+209	32010	Auxiliary Vehicle	-	-	-			56 none	-	-	Average (of DGAC and PCC)	0
9+800	*33735*	*Total*	-		*2249*	-	-	*Traffic light*	*0*	-	*Average (of DGAC and PCC)*	*0*
9+800	33735	Automobiles	-		1313	-		56 Traffic light	0	-	Average (of DGAC and PCC)	0
9+800	33735	Medium trucks	-		802	-		56 Traffic light	0	-	Average (of DGAC and PCC)	0
9+800	33735	Heavy trucks	-		105	-		56 Traffic light	0	-	Average (of DGAC and PCC)	0
9+800	33735	Buses	-		15	-		56 Traffic light	0	-	Average (of DGAC and PCC)	0
9+800	33735	Motorcycles	-		14	-		56 Traffic light	0	-	Average (of DGAC and PCC)	0
9+800	33735	Auxiliary Vehicle	-	-	-			56 Traffic light	0	-	Average (of DGAC and PCC)	0
9+998	*33735*	*Total*	-		*2249*	-	-	*none*	-	-	*Average (of DGAC and PCC)*	*0*
9+998	33735	Automobiles	-		1313	-		56 none	-	-	Average (of DGAC and PCC)	0

9+998	33735	Medium trucks	-	802	-	56	none	-	-	Average (of DGAC and PCC)	0
9+998	33735	Heavy trucks	-	105	-	56	none	-	-	Average (of DGAC and PCC)	0
9+998	33735	Buses	-	15	-	56	none	-	-	Average (of DGAC and PCC)	0
9+998	33735	Motorcycles	-	14	-	56	none	-	-	Average (of DGAC and PCC)	0
9+998	33735	Auxiliary Vehicle	-	-	-	56	none	-	-	Average (of DGAC and PCC)	0
10+063	*33735*	*Total*	-	*2249*	-	-	*none*	-	-	*Average (of DGAC and PCC)*	*0*
10+063	33735	Automobiles	-	1313	-	56	none	-	-	Average (of DGAC and PCC)	0
10+063	33735	Medium trucks	-	802	-	56	none	-	-	Average (of DGAC and PCC)	0
10+063	33735	Heavy trucks	-	105	-	56	none	-	-	Average (of DGAC and PCC)	0
10+063	33735	Buses	-	15	-	56	none	-	-	Average (of DGAC and PCC)	0
10+063	33735	Motorcycles	-	14	-	56	none	-	-	Average (of DGAC and PCC)	0
10+063	33735	Auxiliary Vehicle	-	-	-	56	none	-	-	Average (of DGAC and PCC)	0
10+231	*26760*	*Total*	-	*1784*	-	-	*Traffic light*	*0*	-	*Average (of DGAC and PCC)*	*0*
10+231	26760	Automobiles	-	1041	-	56	Traffic light	0	-	Average (of DGAC and PCC)	0
10+231	26760	Medium trucks	-	636	-	56	Traffic light	0	-	Average (of DGAC and PCC)	0
10+231	26760	Heavy trucks	-	84	-	56	Traffic light	0	-	Average (of DGAC and PCC)	0
10+231	26760	Buses	-	12	-	56	Traffic light	0	-	Average (of DGAC and PCC)	0
10+231	26760	Motorcycles	-	11	-	56	Traffic light	0	-	Average (of DGAC and PCC)	0
10+231	26760	Auxiliary Vehicle	-	-	-	56	Traffic light	0	-	Average (of DGAC and PCC)	0
10+389	*26760*	*Total*	-	*1784*	-	-	*none*	-	-	*Average (of DGAC and PCC)*	*0*
10+389	26760	Automobiles	-	1041	-	56	none	-	-	Average (of DGAC and PCC)	0
10+389	26760	Medium trucks	-	636	-	56	none	-	-	Average (of DGAC and PCC)	0
10+389	26760	Heavy trucks	-	84	-	56	none	-	-	Average (of DGAC and PCC)	0
10+389	26760	Buses	-	12	-	56	none	-	-	Average (of DGAC and PCC)	0
10+389	26760	Motorcycles	-	11	-	56	none	-	-	Average (of DGAC and PCC)	0
10+389	26760	Auxiliary Vehicle	-	-	-	56	none	-	-	Average (of DGAC and PCC)	0
10+931	*38925*	*Total*	-	*2595*	-	-	*Traffic light*	*0*	-	*Average (of DGAC and PCC)*	*0*
10+931	38925	Automobiles	-	1515	-	56	Traffic light	0	-	Average (of DGAC and PCC)	0
10+931	38925	Medium trucks	-	925	-	56	Traffic light	0	-	Average (of DGAC and PCC)	0
10+931	38925	Heavy trucks	-	121	-	56	Traffic light	0	-	Average (of DGAC and PCC)	0
10+931	38925	Buses	-	18	-	56	Traffic light	0	-	Average (of DGAC and PCC)	0
10+931	38925	Motorcycles	-	16	-	56	Traffic light	0	-	Average (of DGAC and PCC)	0
10+931	38925	Auxiliary Vehicle	-	-	-	56	Traffic light	0	-	Average (of DGAC and PCC)	0
12+220	*36435*	*Total*	-	*2429*	-	-	*Traffic light*	*0*	-	*Average (of DGAC and PCC)*	*0*
12+220	36435	Automobiles	-	1418	-	56	Traffic light	0	-	Average (of DGAC and PCC)	0
12+220	36435	Medium trucks	-	866	-	56	Traffic light	0	-	Average (of DGAC and PCC)	0
12+220	36435	Heavy trucks	-	114	-	56	Traffic light	0	-	Average (of DGAC and PCC)	0
12+220	36435	Buses	-	16	-	56	Traffic light	0	-	Average (of DGAC and PCC)	0
12+220	36435	Motorcycles	-	15	-	56	Traffic light	0	-	Average (of DGAC and PCC)	0
12+220	36435	Auxiliary Vehicle	-	-	-	56	Traffic light	0	-	Average (of DGAC and PCC)	0
12+785	-						-	-	-	-	-
0+000	*36435*	*Total*	-	*2429*	-	-	*none*	-	-	*Average (of DGAC and PCC)*	*0*
0+000	36435	Automobiles	-	1418	-	56	none	-	-	Average (of DGAC and PCC)	0
0+000	36435	Medium trucks	-	866	-	56	none	-	-	Average (of DGAC and PCC)	0
0+000	36435	Heavy trucks	-	114	-	56	none	-	-	Average (of DGAC and PCC)	0
0+000	36435	Buses	-	16	-	56	none	-	-	Average (of DGAC and PCC)	0
0+000	36435	Motorcycles	-	15	-	56	none	-	-	Average (of DGAC and PCC)	0
0+000	36435	Auxiliary Vehicle	-	-	-	56	none	-	-	Average (of DGAC and PCC)	0
Valley Mall NB	Traffic direction:	In entry direction									
2+808	*3795*	*Total*	-	*253*	-	-	*none*	-	-	*Average (of DGAC and PCC)*	*0*
2+808	3795	Automobiles	-	147	-	40	none	-	-	Average (of DGAC and PCC)	0
2+808	3795	Medium trucks	-	90	-	40	none	-	-	Average (of DGAC and PCC)	0
2+808	3795	Heavy trucks	-	12	-	40	none	-	-	Average (of DGAC and PCC)	0
2+808	3795	Buses	-	2	-	40	none	-	-	Average (of DGAC and PCC)	0
2+808	3795	Motorcycles	-	2	-	40	none	-	-	Average (of DGAC and PCC)	0
2+808	3795	Auxiliary Vehicle	-	-	-	40	none	-	-	Average (of DGAC and PCC)	0
3+305	*3795*	*Total*	-	*253*	-	-	*none*	-	-	*Average (of DGAC and PCC)*	*0*
3+305	3795	Automobiles	-	147	-	40	none	-	-	Average (of DGAC and PCC)	0

3+305		3795	Medium trucks	-		90	-		40	none	-	-	Average (of DGAC and PCC)	0
3+305		3795	Heavy trucks	-		12	-		40	none	-	-	Average (of DGAC and PCC)	0
3+305		3795	Buses	-		2	-		40	none	-	-	Average (of DGAC and PCC)	0
3+305		3795	Motorcycles	-		2	-		40	none	-	-	Average (of DGAC and PCC)	0
3+305		3795	Auxiliary Vehicle	-	-	-			40	none	-	-	Average (of DGAC and PCC)	0
3+829		*3795*	*Total*	-		*253*	-	-		*none*	-	-	*Average (of DGAC and PCC)*	*0*
3+829		3795	Automobiles	-		147	-		40	none	-	-	Average (of DGAC and PCC)	0
3+829		3795	Medium trucks	-		90	-		40	none	-	-	Average (of DGAC and PCC)	0
3+829		3795	Heavy trucks	-		12	-		40	none	-	-	Average (of DGAC and PCC)	0
3+829		3795	Buses	-		2	-		40	none	-	-	Average (of DGAC and PCC)	0
3+829		3795	Motorcycles	-		2	-		40	none	-	-	Average (of DGAC and PCC)	0
3+829		3795	Auxiliary Vehicle	-	-	-			40	none	-	-	Average (of DGAC and PCC)	0
3+974	-									-	-	-	-	-
I-10 EB Ramp	Traffic direction:	In entry direction												
7+811		*13995*	*Total*	-		*933*	-	-		*On ramp*	*0*	-	*Average (of DGAC and PCC)*	*0*
7+811		13995	Automobiles	-		544	-		64	On ramp	0	-	Average (of DGAC and PCC)	0
7+811		13995	Medium trucks	-		332	-		64	On ramp	0	-	Average (of DGAC and PCC)	0
7+811		13995	Heavy trucks	-		44	-		64	On ramp	0	-	Average (of DGAC and PCC)	0
7+811		13995	Buses	-		7	-		64	On ramp	0	-	Average (of DGAC and PCC)	0
7+811		13995	Motorcycles	-		6	-		64	On ramp	0	-	Average (of DGAC and PCC)	0
7+811		13995	Auxiliary Vehicle	-	-	-			64	On ramp	0	-	Average (of DGAC and PCC)	0
7+915		*13065*	*Total*	-		*871*	-	-		*On ramp*	*0*	-	*Average (of DGAC and PCC)*	*0*
7+915		13065	Automobiles	-		508	-		64	On ramp	0	-	Average (of DGAC and PCC)	0
7+915		13065	Medium trucks	-		310	-		64	On ramp	0	-	Average (of DGAC and PCC)	0
7+915		13065	Heavy trucks	-		41	-		64	On ramp	0	-	Average (of DGAC and PCC)	0
7+915		13065	Buses	-		6	-		64	On ramp	0	-	Average (of DGAC and PCC)	0
7+915		13065	Motorcycles	-		6	-		64	On ramp	0	-	Average (of DGAC and PCC)	0
7+915		13065	Auxiliary Vehicle	-	-	-			64	On ramp	0	-	Average (of DGAC and PCC)	0
8+028		*13995*	*Total*	-		*933*	-	-		*On ramp*	*0*	-	*Average (of DGAC and PCC)*	*0*
8+028		13995	Automobiles	-		544	-		64	On ramp	0	-	Average (of DGAC and PCC)	0
8+028		13995	Medium trucks	-		332	-		64	On ramp	0	-	Average (of DGAC and PCC)	0
8+028		13995	Heavy trucks	-		44	-		64	On ramp	0	-	Average (of DGAC and PCC)	0
8+028		13995	Buses	-		7	-		64	On ramp	0	-	Average (of DGAC and PCC)	0
8+028		13995	Motorcycles	-		6	-		64	On ramp	0	-	Average (of DGAC and PCC)	0
8+028		13995	Auxiliary Vehicle	-	-	-			64	On ramp	0	-	Average (of DGAC and PCC)	0
8+109	-									-	-	-	-	-
I-10 EB Ramp 2	Traffic direction:	In entry direction												
7+811		*21480*	*Total*	-		*1432*	-	-		*On ramp*	*0*	-	*Average (of DGAC and PCC)*	*0*
7+811		21480	Automobiles	-		836	-		64	On ramp	0	-	Average (of DGAC and PCC)	0
7+811		21480	Medium trucks	-		510	-		64	On ramp	0	-	Average (of DGAC and PCC)	0
7+811		21480	Heavy trucks	-		67	-		64	On ramp	0	-	Average (of DGAC and PCC)	0
7+811		21480	Buses	-		10	-		64	On ramp	0	-	Average (of DGAC and PCC)	0
7+811		21480	Motorcycles	-		9	-		64	On ramp	0	-	Average (of DGAC and PCC)	0
7+811		21480	Auxiliary Vehicle	-	-	-			64	On ramp	0	-	Average (of DGAC and PCC)	0
7+875		*21540*	*Total*	-		*1436*	-	-		*On ramp*	*0*	-	*Average (of DGAC and PCC)*	*0*
7+875		21540	Automobiles	-		838	-		64	On ramp	0	-	Average (of DGAC and PCC)	0
7+875		21540	Medium trucks	-		512	-		64	On ramp	0	-	Average (of DGAC and PCC)	0
7+875		21540	Heavy trucks	-		67	-		64	On ramp	0	-	Average (of DGAC and PCC)	0
7+875		21540	Buses	-		10	-		64	On ramp	0	-	Average (of DGAC and PCC)	0
7+875		21540	Motorcycles	-		9	-		64	On ramp	0	-	Average (of DGAC and PCC)	0
7+875		21540	Auxiliary Vehicle	-	-	-			64	On ramp	0	-	Average (of DGAC and PCC)	0
7+936		*20970*	*Total*	-		*1398*	-	-		*On ramp*	*0*	-	*Average (of DGAC and PCC)*	*0*
7+936		20970	Automobiles	-		815	-		64	On ramp	0	-	Average (of DGAC and PCC)	0
7+936		20970	Medium trucks	-		498	-		64	On ramp	0	-	Average (of DGAC and PCC)	0
7+936		20970	Heavy trucks	-		66	-		64	On ramp	0	-	Average (of DGAC and PCC)	0
7+936		20970	Buses	-		10	-		64	On ramp	0	-	Average (of DGAC and PCC)	0
7+936		20970	Motorcycles	-		9	-		64	On ramp	0	-	Average (of DGAC and PCC)	0
7+936		20970	Auxiliary Vehicle	-	-	-			64	On ramp	0	-	Average (of DGAC and PCC)	0

8+134	-							-	-	-	-		-
Olney St WB	Traffic direction:	In entry direction											
7+811	*1665*	*Total*	-		*111*	-	-	*none*	-	-	*Average (of DGAC and PCC)*		*0*
7+811	1665	Automobiles	-		64	-		40	none	-	-	Average (of DGAC and PCC)	0
7+811	1665	Medium trucks	-		39	-		40	none	-	-	Average (of DGAC and PCC)	0
7+811	1665	Heavy trucks	-		6	-		40	none	-	-	Average (of DGAC and PCC)	0
7+811	1665	Buses	-		1	-		40	none	-	-	Average (of DGAC and PCC)	0
7+811	1665	Motorcycles	-		1	-		40	none	-	-	Average (of DGAC and PCC)	0
7+811	1665	Auxiliary Vehicle	-	-	-			40	none	-	-	Average (of DGAC and PCC)	0
7+923	-							-	-	-	-		-
I-10 WB Ramp	Traffic direction:	In entry direction											
7+811	*525*	*Total*	-		*35*	-	-	*On ramp*	*0*	*100*	*Average (of DGAC and PCC)*		*0*
7+811	525	Automobiles	-		19	-		56	On ramp	0	100	Average (of DGAC and PCC)	0
7+811	525	Medium trucks	-		12	-		56	On ramp	0	100	Average (of DGAC and PCC)	0
7+811	525	Heavy trucks	-		2	-		56	On ramp	0	100	Average (of DGAC and PCC)	0
7+811	525	Buses	-		1	-		56	On ramp	0	100	Average (of DGAC and PCC)	0
7+811	525	Motorcycles	-		1	-		56	On ramp	0	100	Average (of DGAC and PCC)	0
7+811	525	Auxiliary Vehicle	-	-	-			56	On ramp	0	100	Average (of DGAC and PCC)	0
7+903	-							-	-	-	-		-

05360 Flair Spectrum Specific Plan
Year 2035 Plus Project Buildout
Receiver Spectra

No.	Name	Floor	Time slice	50 Hz	63 Hz	80 Hz	100 Hz	125 Hz	160 Hz	200 Hz	250 Hz	315 Hz	400 Hz	500 Hz	630 Hz	800 Hz	1 kHz	1 kHz	2 kHz	2 kHz	2 kHz	3 kHz	4 kHz	5 kHz	6 kHz	8 kHz	10 kHz
1	SE of Rosemead Boulevard at I-10	GF	Day	41	48.1	52.6	55.2	56.9	58.3	58.9	55.2	52.2	50.6	53.1	55.3	55.2	56.7	56.7	57.5	57.4	57.9	58.1	55.6	53.2	50.6	47.3	42.5
1	SE of Rosemead Boulevard at I-10	GF	Night	0	0	0	0	0	0	0	0	0	0	0	0	0	0	0	0	0	0	0	0	0	0	0	0
2	Eastern Residential Tower (northwest sid	GF	Day	30.1	36.8	41.1	43.6	45.4	46.7	47	34.4	34.2	36.1	38.6	41	39.6	37.9	35	34.1	32.4	32.6	33.6	32.6	31.5	28.7	25.5	20.9
2	Eastern Residential Tower (northwest sid	GF	Night	0	0	0	0	0	0	0	0	0	0	0	0	0	0	0	0	0	0	0	0	0	0	0	0
3	Hotel (north side)	GF	Day	42.6	49.1	53.4	56	57.9	59.6	60.6	59.9	59.2	58.8	60.6	62.5	61.8	62.9	62.2	62.2	60.8	59.4	58.5	56.5	54	50.8	47.5	43.1
3	Hotel (north side)	GF	Night	0	0	0	0	0	0	0	0	0	0	0	0	0	0	0	0	0	0	0	0	0	0	0	0
4	Hotel (north side)1	GF	Day	43	49.4	53.7	56.3	58.2	59.9	60.9	60.3	59.7	59.4	61.2	63	62.3	63.4	62.6	62.5	61.1	59.7	58.7	56.6	54.2	51.2	47.9	43.5
4	Hotel (north side)1	GF	Night	0	0	0	0	0	0	0	0	0	0	0	0	0	0	0	0	0	0	0	0	0	0	0	0
5	NE corner of Aerojet and Telstar	GF	Day	42.7	48.5	52.5	54.8	56.4	57.6	58.1	55.3	53.8	52.4	52.7	54.3	54.2	55.4	54.2	55.2	54.4	54.5	55.3	54.3	52.8	49.7	46.6	42.1
5	NE corner of Aerojet and Telstar	GF	Night	0	0	0	0	0	0	0	0	0	0	0	0	0	0	0	0	0	0	0	0	0	0	0	0
6	NE corner of Peck and Garvey	GF	Day	42.5	48.1	51.7	53.8	55.3	56.5	57.1	55	53.5	51.5	51.8	53.5	53.4	54.8	54.2	54.6	53.6	53.7	53.9	51.9	50.5	46.7	43.7	39.6
6	NE corner of Peck and Garvey	GF	Night	0	0	0	0	0	0	0	0	0	0	0	0	0	0	0	0	0	0	0	0	0	0	0	0
7	NE corner of Peck and Ramona	GF	Day	41.8	47.2	50.8	52.9	54.3	55.5	55.9	53.9	51.9	49.4	49.6	51.5	51.6	53.2	52.9	53.7	52.7	52.4	53.2	51.2	49.2	45.7	42.7	38.7
7	NE corner of Peck and Ramona	GF	Night	0	0	0	0	0	0	0	0	0	0	0	0	0	0	0	0	0	0	0	0	0	0	0	0
8	NE corner of Roseglen and Lower Azusa	GF	Day	37.7	43	46.4	48.4	49.8	50.9	51.3	49.6	47.1	43.6	43.2	45.5	46.3	48.2	48.3	49.4	48.7	48.3	48.3	47.5	45	41.8	38.9	35
8	NE corner of Roseglen and Lower Azusa	GF	Night	0	0	0	0	0	0	0	0	0	0	0	0	0	0	0	0	0	0	0	0	0	0	0	0
9	NE corner of Rosemead and Lower Azusa	GF	Day	41.6	47.4	51.1	53.2	54.7	55.9	56.6	55.4	53.8	51.5	51.3	53.2	53.7	55.4	54.7	55.3	54.2	53.9	53.6	51.7	49.8	46.1	43.2	39.2
9	NE corner of Rosemead and Lower Azusa	GF	Night	0	0	0	0	0	0	0	0	0	0	0	0	0	0	0	0	0	0	0	0	0	0	0	0
10	NE corner of Rosemead and Rush	GF	Day	40.4	46.2	49.9	52.1	53.6	54.9	55.4	53.7	51.5	48.4	48.1	50.4	50.9	52.9	52.8	53.8	53.1	52.8	52.8	51	49.2	45.8	42.8	38.9
10	NE corner of Rosemead and Rush	GF	Night	0	0	0	0	0	0	0	0	0	0	0	0	0	0	0	0	0	0	0	0	0	0	0	0
11	NE corner of Santa Anita and Valley	GF	Day	42.6	48.3	52.2	54.4	55.9	57.1	57.6	56	54.3	52.3	52.4	54	54.1	55.6	55	55.5	54.7	54.9	54.9	52.5	51.2	47.6	44.6	40.5
11	NE corner of Santa Anita and Valley	GF	Night	0	0	0	0	0	0	0	0	0	0	0	0	0	0	0	0	0	0	0	0	0	0	0	0
12	NE corner of Tyler and Valley	GF	Day	41.4	46.8	50.5	52.8	54.2	55.4	55.8	52.8	50.5	47.9	48.4	50.1	50.2	51.7	51.7	52.5	52.1	52	52.8	51.8	49.3	46.1	43.1	38.9
12	NE corner of Tyler and Valley	GF	Night	0	0	0	0	0	0	0	0	0	0	0	0	0	0	0	0	0	0	0	0	0	0	0	0
13	NE corner of Walnut Grove and Garvey	GF	Day	40.3	46	49.7	51.8	53.3	54.5	54.9	52.2	49.7	46.4	46.4	48.7	49.2	51.1	51.2	52.3	51.8	51.6	51.6	50.5	48.6	45.5	42.5	38.4
13	NE corner of Walnut Grove and Garvey	GF	Night	0	0	0	0	0	0	0	0	0	0	0	0	0	0	0	0	0	0	0	0	0	0	0	0
14	NE corner of Walnut Grove and Valley	GF	Day	40.7	46.3	50	52.1	53.6	54.8	55.2	52.7	50.4	47.4	47.5	49.6	50	51.8	51.7	52.7	52	51.7	52.1	50.7	48.7	45.5	42.5	38.4
14	NE corner of Walnut Grove and Valley	GF	Night	0	0	0	0	0	0	0	0	0	0	0	0	0	0	0	0	0	0	0	0	0	0	0	0
15	NE of San Gabriel at I-10	GF	Day	40.8	47.4	51.7	54.2	56	57.5	58.3	56.1	54	52.2	54	56.3	56.3	57.9	57.7	58.3	57.6	57.3	56.6	54.3	52.6	49	45.7	41.1
15	NE of San Gabriel at I-10	GF	Night	0	0	0	0	0	0	0	0	0	0	0	0	0	0	0	0	0	0	0	0	0	0	0	0
16	NW Corner of Aerojet and Telstar	GF	Day	43.9	49.9	54	56.4	57.9	59.2	59.7	57.9	56.6	55.5	56.1	57.5	57.1	58.1	56.8	57.5	56.5	56.5	57.1	55.7	54.1	51.2	48.1	43.9
16	NW Corner of Aerojet and Telstar	GF	Night	0	0	0	0	0	0	0	0	0	0	0	0	0	0	0	0	0	0	0	0	0	0	0	0
17	NW corner of Baldwin and Olive	GF	Day	38.1	43.3	46.7	48.7	50.1	51.2	51.5	49.1	46.3	42.7	42.7	45	45.6	47.5	47.7	48.8	48.5	48.3	48.2	47.6	45.4	42.2	39.3	35.4
17	NW corner of Baldwin and Olive	GF	Night	0	0	0	0	0	0	0	0	0	0	0	0	0	0	0	0	0	0	0	0	0	0	0	0
18	NW corner of Glendon and Rosemead	GF	Day	43.8	49.9	53.8	56.1	57.7	59	59.7	58.1	56.9	55.6	56.1	57.8	57.7	59	57.9	58.4	57.4	57	56.8	55.4	53.6	50.3	47.1	42.7
18	NW corner of Glendon and Rosemead	GF	Night	0	0	0	0	0	0	0	0	0	0	0	0	0	0	0	0	0	0	0	0	0	0	0	0
19	NW corner of Merced and Garvey	GF	Day	39.3	44.9	48.6	50.8	52.3	53.4	53.7	49.4	46.6	43.2	43.6	45.8	46.2	48.1	48.2	49.4	49.3	49.6	49.6	48.2	47.3	43.9	40.8	36.7
19	NW corner of Merced and Garvey	GF	Night	0	0	0	0	0	0	0	0	0	0	0	0	0	0	0	0	0	0	0	0	0	0	0	0
20	NW corner of Peck and Lower Azusa	GF	Day	40.2	45.5	49	51	52.3	53.4	53.8	51.7	49.1	45.9	46.2	48.4	48.7	50.5	50.5	51.6	51.3	51	50.7	50.3	48	44.9	42	38
20	NW corner of Peck and Lower Azusa	GF	Night	0	0	0	0	0	0	0	0	0	0	0	0	0	0	0	0	0	0	0	0	0	0	0	0
21	NW corner of Rio Hondo and Telstar	GF	Day	43.2	48.6	52.2	54.4	55.9	57.2	57.8	56	55.3	54.6	55.2	56.5	55.9	56.8	55.2	55.3	53.5	53.5	54.1	53.1	51.9	48.9	46	42
21	NW corner of Rio Hondo and Telstar	GF	Night	0	0	0	0	0	0	0	0	0	0	0	0	0	0	0	0	0	0	0	0	0	0	0	0
22	NW corner of San Gabriel and Valley	GF	Day	42.2	47.7	51.2	53.2	54.7	55.9	56.5	55.2	53.5	51.3	51.2	52.9	53.2	54.8	54	54.8	53.9	53.5	53.2	51.4	50.2	46.2	43.3	39.5
22	NW corner of San Gabriel and Valley	GF	Night	0	0	0	0	0	0	0	0	0	0	0	0	0	0	0	0	0	0	0	0	0	0	0	0
23	NW corner of Tyler and Garvey	GF	Day	42.5	47.7	51.1	53.2	54.6	55.8	56.2	53.4	51.4	49.1	49.2	50.9	51	52.5	51.9	52.6	52	52.2	52.6	51.3	49.8	46.3	43.3	39.2
23	NW corner of Tyler and Garvey	GF	Night	0	0	0	0	0	0	0	0	0	0	0	0	0	0	0	0	0	0	0	0	0	0	0	0
24	NW corner of Tyler and Ramona	GF	Day	41.2	46.6	50.3	52.4	53.9	55.1	55.4	50.9	49	47.6	48.6	50.1	49.3	50.4	49.8	50.5	49.9	50.7	52	50.7	49.7	46.3	43.2	38.7
24	NW corner of Tyler and Ramona	GF	Night	0	0	0	0	0	0	0	0	0	0	0	0	0	0	0	0	0	0	0	0	0	0	0	0
25	NW corner of Valley and Garvey	GF	Day	41.4	47.1	50.8	52.9	54.5	55.7	56.2	53.6	51.7	49.6	49.7	51.5	51.7	53.3	52.6	53.4	52.8	52.9	52.7	51.3	50.4	46.7	43.6	39.4
25	NW corner of Valley and Garvey	GF	Night	0	0	0	0	0	0	0	0	0	0	0	0	0	0	0	0	0	0	0	0	0	0	0	0
26	NW of Santa Anita at I-10	GF	Day	42.7	49.4	53.7	56.2	58	59.6	60.5	58.9	57.4	56.1	57.8	59.9	59.8	61.3	60.9	61.3	60.2	59.4	58.4	56.4	54.8	51.1	47.8	43.2
26	NW of Santa Anita at I-10	GF	Night	0	0	0	0	0	0	0	0	0	0	0	0	0	0	0	0	0	0	0	0	0	0	0	0
27	SE corner of Aerojet and Flair	GF	Day	42.3	48.8	53.2	55.7	57.5	59.1	59.9	58	56.6	55.9	58	60	59.4	60.6	60.1	60.3	59.3	58.5	57.6	55.8	54.3	50.8	47.5	42.9
27	SE corner of Aerojet and Flair	GF	Night	0	0	0	0	0	0	0	0	0	0	0	0	0	0	0	0	0	0	0	0	0	0	0	0
28	SE corner of Baldwin and Valley	GF	Day	41.3	47.3	51.4	53.7	55.3	56.5	56.8	54.1	51.8	48.8	48.8	50.8	51.4	53.1	53.1	54.1	53.7	53.7	54.1	52.3	50.8	47.2	44.1	39.8
28	SE corner of Baldwin and Valley	GF	Night	0	0	0	0	0	0	0	0	0	0	0	0	0	0	0	0	0	0	0	0	0	0	0	0
29	SE corner of Chico and Garvey	GF	Day	40.6	46.1	49.7	51.8	53.2	54.4	54.8	52.5	50.6	48.2	48	49.9	50.2	51.8	51.3	52	51	51	51.5	49.4	47.9	44.4	41.4	37.4
29	SE corner of Chico and Garvey	GF	Night	0	0	0	0	0	0	0	0	0	0	0	0	0	0	0	0	0	0	0	0	0	0	0	0
30	SE corner of Rosemead and Garvey	GF	Day	42.2	48	51.7	53.9	55.4	56.6	57	54.9	52.9	50.5	50.8	52.6	52.8	54.5	54	54.9	54.3	54.6	54.2	52.4	51.2	47.6	44.6	40.5
30	SE corner of Rosemead and Garvey	GF	Night	0	0	0	0	0	0	0	0	0	0	0	0	0	0	0	0	0	0	0	0	0	0	0	0
31	SE corner of Temple City at Loftus	GF	Day	42.9	48.6	52.4	54.7	56.4	57.7	58.3	55.6	53.9	52.9	54.4	56.1	55.5	56.6	55.8	56.2	55.6	55.9	56.2	54.2	52.6	49.1	45.8	41.3

31	SE corner of Temple City at Loftus	GF	Night	0	0	0	0	0	0	0	0	0	0	0	0	0	0	0	0	0	0	0	0	0	0	0	0
32	SE corner of Temple City at Valley	GF	Day	41.1	46.9	50.8	53	54.5	55.7	56	53.4	51	48.1	48.2	50.3	50.6	52.4	52.3	53.4	52.9	52.7	53	51.9	50	46.6	43.5	39.3
32	SE corner of Temple City at Valley	GF	Night	0	0	0	0	0	0	0	0	0	0	0	0	0	0	0	0	0	0	0	0	0	0	0	0
33	South of Santa Anita at Tyler	GF	Day	42.6	47.4	50.6	52.6	53.9	55	55.4	53.6	51.4	48.6	48.4	50.3	50.6	52.3	52.1	52.9	52.1	52	52.6	50.8	48.6	45.3	42.4	38.7
33	South of Santa Anita at Tyler	GF	Night	0	0	0	0	0	0	0	0	0	0	0	0	0	0	0	0	0	0	0	0	0	0	0	0
34	SW corner of Baldwin and Lower Azusa	GF	Day	41.5	46.9	50.5	52.6	54	55.1	55.6	53.9	51.9	49.2	49	51	51.6	53.3	53	53.6	52.6	52.5	53	50.9	49.1	45.5	42.5	38.6
34	SW corner of Baldwin and Lower Azusa	GF	Night	0	0	0	0	0	0	0	0	0	0	0	0	0	0	0	0	0	0	0	0	0	0	0	0
35	SW corner of Durfee and Ramona	GF	Day	39	44.3	47.8	49.8	51.3	52.4	52.9	51.2	49.3	46.6	46.1	48.1	48.6	50.5	50	50.8	49.7	49.7	50	47.8	46.2	42.7	39.8	35.9
35	SW corner of Durfee and Ramona	GF	Night	0	0	0	0	0	0	0	0	0	0	0	0	0	0	0	0	0	0	0	0	0	0	0	0
36	SW corner of Fletcher and Flair	GF	Day	43.6	49.9	54.1	56.6	58.5	60.2	61.2	60.5	60	59.8	61.7	63.4	62.6	63.6	62.8	62.7	61.2	59.8	58.9	56.8	54.4	51.4	48.2	43.8
36	SW corner of Fletcher and Flair	GF	Night	0	0	0	0	0	0	0	0	0	0	0	0	0	0	0	0	0	0	0	0	0	0	0	0
37	SW corner of Gilman and Ramona	GF	Day	39.5	44.8	48.2	50.2	51.6	52.8	53.4	52.3	50.5	48.1	47.6	49.5	50	51.7	51	51.7	50.6	50.7	50.5	48.4	46.8	42.8	40	36.2
37	SW corner of Gilman and Ramona	GF	Night	0	0	0	0	0	0	0	0	0	0	0	0	0	0	0	0	0	0	0	0	0	0	0	0
38	SW corner of Merced and Garvey	GF	Day	39.2	44.8	48.4	50.5	52	53.1	53.4	49.6	46.9	43.7	44.1	46.2	46.5	48.3	48.4	49.5	49.3	49.5	49.5	48	47.1	43.6	40.6	36.5
38	SW corner of Merced and Garvey	GF	Night	0	0	0	0	0	0	0	0	0	0	0	0	0	0	0	0	0	0	0	0	0	0	0	0
39	SW corner of Peck and Garvey	GF	Day	42.3	47.8	51.4	53.5	55	56.2	56.8	55	53.5	51.8	52.1	53.6	53.5	54.9	54.1	54.5	53.6	53.4	53.4	51.6	50.1	46.4	43.5	39.5
39	SW corner of Peck and Garvey	GF	Night	0	0	0	0	0	0	0	0	0	0	0	0	0	0	0	0	0	0	0	0	0	0	0	0
40	SW corner of Rio Hondo and Flair	GF	Day	42.9	49.1	53.3	55.8	57.5	59.1	59.8	57.6	56	55.3	57.5	59.5	58.8	60	59.5	59.7	58.8	58.3	57.3	55.4	54.1	50.5	47.2	42.6
40	SW corner of Rio Hondo and Flair	GF	Night	0	0	0	0	0	0	0	0	0	0	0	0	0	0	0	0	0	0	0	0	0	0	0	0
41	SW corner of Rosemead and Las Tunas Dr	GF	Day	41	46.4	49.9	51.9	53.3	54.5	54.9	53.2	50.9	47.9	48	50.2	50.5	52.4	52.3	53.3	52.7	52.3	52.3	51.4	49	45.8	42.9	38.9
41	SW corner of Rosemead and Las Tunas Dr	GF	Night	0	0	0	0	0	0	0	0	0	0	0	0	0	0	0	0	0	0	0	0	0	0	0	0
42	SW corner of Rosemead and Valley	GF	Day	43.2	48.9	52.6	54.8	56.3	57.5	58.2	56.9	55.5	53.4	53.4	55.2	55.4	57	56.2	56.8	55.6	55.5	55.1	52.9	51.5	47.8	44.9	40.8
42	SW corner of Rosemead and Valley	GF	Night	0	0	0	0	0	0	0	0	0	0	0	0	0	0	0	0	0	0	0	0	0	0	0	0
43	SW corner of Santa Anita and Garvey	GF	Day	41.6	47.1	50.7	52.8	54.3	55.5	55.9	53.6	51.5	49	49.2	51.1	51.2	52.8	52.6	53.3	52.5	52.2	52.8	51.2	49.1	45.7	42.7	38.7
43	SW corner of Santa Anita and Garvey	GF	Night	0	0	0	0	0	0	0	0	0	0	0	0	0	0	0	0	0	0	0	0	0	0	0	0
44	SW corner of Santa Anita and Lower Azusa	GF	Day	42.1	47	50.2	52.1	53.5	54.6	55	53.5	51.4	48.7	48.3	50.2	50.7	52.4	52	52.8	52	52.1	52.1	50.6	48.6	45.1	42.2	38.5
44	SW corner of Santa Anita and Lower Azusa	GF	Night	0	0	0	0	0	0	0	0	0	0	0	0	0	0	0	0	0	0	0	0	0	0	0	0
45	SW corner of Telstar and Flair	GF	Day	44.1	50.2	54.4	56.8	58.7	60.3	61.3	60.4	59.8	59.5	61.3	63.1	62.3	63.3	62.5	62.5	61.1	59.7	58.8	56.9	54.6	51.5	48.3	43.9
45	SW corner of Telstar and Flair	GF	Night	0	0	0	0	0	0	0	0	0	0	0	0	0	0	0	0	0	0	0	0	0	0	0	0
46	SW corner of Temple City and Lower Azusa	GF	Day	39.4	45.4	49.3	51.6	53.1	54.2	54.6	51.8	49.1	45.7	45.9	48.2	48.7	50.5	50.7	51.9	51.8	51.9	51.9	50.5	49.2	45.7	42.6	38.4
46	SW corner of Temple City and Lower Azusa	GF	Night	0	0	0	0	0	0	0	0	0	0	0	0	0	0	0	0	0	0	0	0	0	0	0	0
47	SW of Peck at I-10	GF	Day	42	48.7	53	55.5	57.4	58.9	59.7	57.8	56.1	54.8	56.6	58.8	58.6	60.2	59.9	60.4	59.4	58.7	57.7	56	54.2	50.7	47.4	42.8
47	SW of Peck at I-10	GF	Night	0	0	0	0	0	0	0	0	0	0	0	0	0	0	0	0	0	0	0	0	0	0	0	0
48	SW of Santa Anita at I-10	GF	Day	41.6	48.2	52.4	54.9	56.7	58.2	58.9	56.3	54.3	53	55.2	57.4	57	58.4	58.2	58.7	58	57.8	57.1	54.9	53.2	49.7	46.4	41.8
48	SW of Santa Anita at I-10	GF	Night	0	0	0	0	0	0	0	0	0	0	0	0	0	0	0	0	0	0	0	0	0	0	0	0
49	Western Residential Tower (west side)	GF	Day	40.1	45.5	49.2	51.5	53	54.2	54.6	50.7	48.7	47.4	48.3	50	49.7	50.9	49.9	50.7	50.4	50.7	51.7	50.6	49.2	46.1	42.9	38.4
49	Western Residential Tower (west side)	GF	Night	0	0	0	0	0	0	0	0	0	0	0	0	0	0	0	0	0	0	0	0	0	0	0	0

05360 Flair Spectrum Specific Plan
Year 2035 Plus Project Buildout
Receivers

No.	Receiver name	Floor	Level Day dB(A)
1	SE of Rosemead Boulevard at I-10	GF	69.1
2	NE corner of Aerojet and Telstar	GF	67.9
3	NE corner of Peck and Garvey	GF	67
4	NE corner of Peck and Ramona	GF	65.7
5	NE corner of Roseglen and Lower Azusa	GF	61.1
6	NE corner of Rosemead and Lower Azusa	GF	66.9
7	NE corner of Rosemead and Rush	GF	65.4
8	NE corner of Santa Anita and Valley	GF	67.7
9	NE corner of Tyler and Valley	GF	65.2
10	NE corner of Walnut Grove and Garvey	GF	64.4
11	NE corner of Walnut Grove and Valley	GF	64.7
12	NE of San Gabriel at I-10	GF	69.1
13	NW Corner of Aerojet and Telstar	GF	70
14	NW corner of Baldwin and Olive	GF	61
15	NW corner of Glendon and Rosemead	GF	70.2
16	NW corner of Merced and Garvey	GF	62.5
17	NW corner of Peck and Lower Azusa	GF	63.6
18	NW corner of Rio Hondo and Telstar	GF	68.2
19	NW corner of San Gabriel and Valley	GF	66.7
20	NW corner of Tyler and Garvey	GF	65.6
21	NW corner of Tyler and Ramona	GF	64.4
22	NW corner of Valley and Garvey	GF	65.8
23	NW of Santa Anita at I-10	GF	71.8
24	SE corner of Aerojet and Flair	GF	71.2
25	SE corner of Baldwin and Valley	GF	66.3
26	SE corner of Chico and Garvey	GF	64.4
27	SE corner of Rosemead and Garvey	GF	66.9
28	SE corner of Temple City at Loftus	GF	68.5
29	SE corner of Temple City at Valley	GF	65.6
30	South of Santa Anita at Tyler	GF	65.2
31	SW corner of Baldwin and Lower Azusa	GF	65.6
32	SW corner of Durfee and Ramona	GF	62.8
33	SW corner of Fletcher and Flair	GF	73.5
34	SW corner of Gilman and Ramona	GF	63.6
35	SW corner of Merced and Garvey	GF	62.4
36	SW corner of Peck and Garvey	GF	66.8

37	SW corner of Rio Hondo and Flair	GF	70.8
38	SW corner of Rosemead and Las Tunas Dr	GF	65
39	SW corner of Rosemead and Valley	GF	68.5
40	SW corner of Santa Anita and Garvey	GF	65.5
41	SW corner of Santa Anita and Lower Azusa	GF	65
42	SW corner of Telstar and Flair	GF	73.4
43	SW corner of Temple City and Lower Azusa	GF	64.1
44	SW of Peck at I-10	GF	70.9
45	SW of Santa Anita at I-10	GF	69.7

Appendix G Traffic Impact Analysis

LINSCOTT
LAW &
GREENSPAN
engineers

TRAFFIC IMPACT STUDY

FLAIR SPECTRUM SPECIFIC PLAN

City of El Monte, California
October 22, 2014

Prepared for:

MIG - Hogle Ireland
169 North Marengo Avenue
Pasadena, California 91101

LLG Ref. 1-14-4074-1

REGISTERED PROFESSIONAL ENGINEER
CLARE M. LOOK-JAEGER
TR1878
EXP. 06/30/15
TRAFFIC
STATE OF CALIFORNIA

Prepared by:

Francesca S. Bravo
Transportation Engineer III

Under the Supervision of:

Clare M. Look-Jaeger, P.E.
Principal

Linscott, Law & Greenspan, Engineers

600 S. Lake Avenue
Suite 500
Pasadena, CA 91106

626.796.2322 T
626.792.0941 F
www.llgengineers.com

TABLE OF CONTENTS

SECTION PAGE

1.0 Introduction 1
1.1 Study Area 3

2.0 Project Description 4
2.1 Flair Park 4
2.1.1 Flair Park History and Overview 4
2.1.2 Flair Spectrum Specific Plan 4
2.1.3 Flair Spectrum Specific Plan – General Plan Consistency 5
2.2 Existing Setting and Project Site 9
2.3 Proposed Project Description 9

3.0 Site Access and Circulation 11
3.1 Existing Vehicular Site Access 11
3.2 Proposed Project Vehicular Site Access 11
3.3 Pedestrian Access 13
3.4 Bicycle Access 14
3.5 Proximity to Nearby Trail System 15

4.0 Project Parking 16
4.1 City of El Monte Code Parking Requirements 16
4.2 Proposed Parking Supply 17
4.3 Parking Supply-Code Parking Requirement Summary 17

5.0 Existing Street System 21
5.1 Regional Highway System 21
5.2 Local Street System 21
5.3 Roadway Classifications 21
5.4 Roadway Descriptions 26
5.5 Public Transit Services 26
5.5.1 Regional Rail Transit Network Connections 26
5.5.2 Public Bus Transit Services 29
5.5.3 El Monte Shuttle and Commuter Transit 34
5.6 Designated Transit Corridors 34
5.7 Designated Truck Routes 35

6.0 Traffic Counts 36

7.0 Cumulative Development Projects 44
7.1 Related Projects 44
7.2 Ambient Traffic Growth Factor 52

TABLE OF CONTENTS

SECTION PAGE

8.0 Traffic Forecasting Methodology 53
8.1 Project Traffic Generation 53
8.2 Project Traffic Distribution and Assignment 56
8.3 Equivalency Program 59
8.3.1 Criteria 59
8.3.2 Submittal and Approval Procedures 68

9.0 Traffic Impact Analysis Methodology 70
9.1 Impact Criteria and Thresholds 71
9.1.1 City of El Monte Impact Criteria 72
9.1.2 City of Arcadia Impact Criteria 72
9.1.3 City of Rosemead Impact Criteria 73
9.1.4 City of San Gabriel Impact Criteria 73
9.1.5 City of South El Monte Impact Criteria 73
9.1.6 City of Temple City Impact Criteria 74
9.2 Traffic Impact Analysis Scenarios 75

10.0 City of El Monte Traffic Analysis 76
10.1 Existing Conditions 76
10.1.1 Existing Conditions 76
10.1.2 Existing With Project Build-out Conditions 76
10.2 Future Year 2016 Conditions 85
10.2.1 Future Year 2016 Without Project Conditions 85
10.2.2 Future Year 2016 With Phase I Project Conditions 85
10.3 Future Year 2019 Conditions 92
10.3.1 Future Year 2019 Without Project Conditions 92
10.3.2 Future Year 2019 With Project Build-out Conditions 99
10.4 Future Year 2035 Conditions 103
10.4.1 Future Year 2035 Without Project Conditions 103
10.4.2 Future Year 2035 With Project Build-out Conditions 103
10.5 Summary of Impacted Intersections by Analysis Scenarios 107

11.0 Other Jurisdictions' Traffic Analyses 112
11.1 City of San Gabriel Traffic Analysis 112
11.1.1 Existing With Project Build-out Conditions 112
11.1.2 Future Year 2016 With Phase I Project Conditions 112
11.1.3 Future Year 2019 With Project Build-out Conditions 120
11.1.4 Future Year 2035 With Project Build-out Conditions 120
11.2 City of Rosemead Traffic Analysis 120
11.2.1 Existing With Project Build-out Conditions 120
11.2.2 Future Year 2016 With Phase I Project Conditions 121
11.2.3 Future Year 2019 With Project Build-out Conditions 121
11.2.4 Future Year 2035 With Project Build-out Conditions 121

TABLE OF CONTENTS

SECTION PAGE

11.3 City of South El Monte Traffic Analysis 122
11.3.1 Existing With Project Build-out Conditions 122
11.3.2 Future Year 2016 With Phase I Project Conditions 122
11.3.3 Future Year 2019 With Project Build-out Conditions 123
11.3.4 Future Year 2035 With Project Build-out Conditions 123
11.4 City of Arcadia Traffic Analysis 124
11.4.1 Existing With Project Build-out Conditions 124
11.4.2 Future Year 2016 With Phase I Project Conditions 124
11.4.3 Future Year 2019 With Project Build-out Conditions 124
11.4.4 Future Year 2035 With Project Build-out Conditions 125
11.5 City of Temple City Traffic Analysis 125
11.5.1 Future Year 2016 With Phase I Project Conditions 125
11.5.2 Future Year 2019 With Project Build-out Conditions 125
11.5.3 Future Year 2035 With Project Build-out Conditions 126

12.0 Transportation Mitigation Program 127
12.1 Intelligent Transportation System (ITS) Enhancements 127
12.1.1 Caltrans Traffic Signal Management & Surveillance System (TSMSS) 127
12.1.2 General Plan Discussions of ITS Enhancements 131
12.2 Physical Transportation Mitigation Measures 131
12.2.1 City of El Monte Transportation Mitigation Measures 132
12.2.2 Other City Jurisdictional Transportation Mitigation Measures 135
12.3 Transportation Demand Management Measures 140
12.4 Determination of Fair-Share Contribution Percentages 143

13.0 Congestion Management Program Traffic Impact Assessment 145
13.1 Intersections 145
13.2 Freeways 146
13.3 Transit Impact Review 146

14.0 California Department of Transportation Analysis 147
14.1 Freeway Analysis 147
14.2 Intersection Analysis 151
14.3 Ramp Vehicle Queuing Analysis 153

15.0 Construction Impact Analysis 155
15.1 Overview of Construction Phases 155
15.1.1 Grading/Excavation Activities 155
15.1.2 Sub-Grade/Above-Grade Building Construction 156
15.2 Construction Assumptions 156
15.3 Construction Traffic Trip Generation 157
15.3.1 Peak Construction Worker Demand 157
15.3.2 Peak Construction Truck Demand 158
15.3.3 Peak Construction Traffic Generation Summary 159

15.4 Haul Routes 159
15.5 Construction Traffic Impacts 159

16.0 Conclusions 161

TABLE OF CONTENTS *(continued)*
LIST OF FIGURES

SECTION—FIGURE #		PAGE
1-1	Vicinity Map	2
2-1	Aerial Photograph of Specific Plan Boundary and Flair Park	6
2-2	Project Site Plan	10
5-1	Existing Lane Configurations	24
5–2	Regional Rail Network	28
5-3	Existing Transit Routes	33
6-1	Existing Traffic Volumes – Weekday AM Peak Hour	41
6-2	Existing Traffic Volumes – Weekday PM Peak Hour	42
6-3	Existing Traffic Volumes – Saturday Mid-Day Peak Hour	43
7-1	Location of Related Projects	48
7-2	Related Projects Traffic Volumes – Weekday AM Peak Hour	49
7-3	Related Projects Traffic Volumes – Weekday PM Peak Hour	50
7-4	Related Projects Traffic Volumes – Saturday Mid-Day Peak Hour	51
8-1	Project Trip Distribution – Hotel Land Use Component	57
8-2	Project Trip Distribution – Commercial Land Use Components	58
8-3	Project Trip Distribution – Residential Land Use Component	60
8-4	Phase I Project Traffic Volumes – Weekday AM Peak Hour	61
8-5	Phase I Project Traffic Volumes – Weekday PM Peak Hour	62
8-6	Phase I Project Traffic Volumes – Saturday Mid-Day Peak Hour	63
8-7	Project Build-out Traffic Volumes – Weekday AM Peak Hour	64
8-8	Project Build-out Traffic Volumes – Weekday PM Peak Hour	65
8-9	Project Build-out Traffic Volumes – Saturday Mid-Day Peak Hour	66
10–1	Existing With Project Build-out Traffic Volumes – Weekday AM Peak Hour	86
10–2	Existing With Project Build-out Traffic Volumes – Weekday PM Peak Hour	87
10–3	Existing With Project Build-out Traffic Volumes – Saturday Mid-Day Peak Hour	88
10–4	Future Year 2016 Without Project Traffic Volumes – Weekday AM Peak Hour	89
10–5	Future Year 2016 Without Project Traffic Volumes – Weekday PM Peak Hour	90
10–6	Future Year 2016 Without Project Traffic Volumes – Saturday Mid-Day Peak Hour	91

TABLE OF CONTENTS *(continued)*

LIST OF FIGURES

SECTION—FIGURE #		PAGE
10–7	Future Year 2016 With Phase I Project Traffic Volumes – Weekday AM Peak Hour	93
10–8	Future Year 2016 With Phase I Project Traffic Volumes – Weekday PM Peak Hour	94
10–9	Future Year 2016 With Phase I Project Traffic Volumes – Saturday Mid-Day Peak Hour	95
10–10	Future Year 2019 Without Project Traffic Volumes – Weekday AM Peak Hour	96
10–11	Future Year 2019 Without Project Traffic Volumes – Weekday PM Peak Hour	97
10–12	Future Year 2019 Without Project Traffic Volumes – Saturday Mid-Day Peak Hour	98
10–13	Future Year 2019 With Project Build-out Traffic Volumes – Weekday AM Peak Hour	100
10–14	Future Year 2019 With Project Build-out Traffic Volumes – Weekday PM Peak Hour	101
10–15	Future Year 2019 With Project Build-out Traffic Volumes – Saturday Mid-Day Peak Hour	102
10–16	Future Year 2035 Without Project Traffic Volumes – Weekday AM Peak Hour	104
10–17	Future Year 2035 Without Project Traffic Volumes – Weekday PM Peak Hour	105
10–18	Future Year 2035 Without Project Traffic Volumes – Saturday Mid-Day Peak Hour	106
10–19	Future Year 2035 With Project Build-out Traffic Volumes – Weekday AM Peak Hour	108
10–20	Future Year 2035 With Project Build-out Traffic Volumes – Weekday PM Peak Hour	109
10–21	Future Year 2035 With Project Build-out Traffic Volumes – Saturday Mid-Day Peak Hour	110

LIST OF TABLES

SECTION—TABLE #		PAGE
4–1	Code Parking Requirements	18
4–2	Project Parking Summary	19
5–1	List of Study Intersections	22
5–2	Existing Roadway Descriptions	27
5–3	Existing Transit Routes	30
6-1	Existing Traffic Volumes	37
7–1	Related Projects List and Trip Generation	45

TABLE OF CONTENTS *(continued)*
LIST OF TABLES

SECTION—TABLE #		PAGE
8–1	Project Trip Generation	55
8-2	Development Equivalency Matrix (Ratios)	67
9-1	City of El Monte Level of Service Criteria for Signalized Intersections	70
9-2	City of El Monte Level of Service Criteria for Unsignalized Intersections	71
9-3	City of San Gabriel Intersection Threshold Criteria	73
9-4	City of Temple City Intersection Threshold Criteria	74
10-1	City of El Monte Levels of Service Summary – Year 2014 Existing Conditions	77
10-2	City of El Monte Levels of Service Summary – Year 2016 Future Conditions	79
10-3	City of El Monte Levels of Service Summary – Year 2019 Future Conditions	82
10-4	City of El Monte Levels of Service Summary – Year 2035 Future Conditions	84
10-5	City of El Monte Summary of Impacted Intersections by Analysis Scenario	111
11-1	Other Jurisdictions Levels of Service Summary – Year 2014 Existing Conditions	113
11-2	Other Jurisdictions Levels of Service Summary – Year 2016 Future Conditions	114
11-3	Other Jurisdictions Levels of Service Summary – Year 2019 Future Conditions	115
11-4	Other Jurisdictions Levels of Service Summary – Year 2035 Future Conditions	116
11-5	City of Temple City Levels of Service Summary – Year 2016 Future Conditions	117
11-6	City of Temple City Levels of Service Summary – Year 2019 Future Conditions	118
11-7	City of Temple City Levels of Service Summary – Year 2035 Future Conditions	119
12–1	Summary List of Impacted and Mitigated Intersections	128
12-2	Pro-Rata Percentage of Improvement Measures	144
14–1	Caltrans Freeway Impact Analysis	149
14–2	Caltrans Intersection Impact Analysis	152
14–3	Summary of Potential Freeway Off-Ramp Vehicle Queuing	154

TABLE OF CONTENTS *(continued)*
APPENDICES

APPENDIX

A. Traffic Count Data

B. ICU and HCM Levels of Service Explanation

Intersection Levels of Service Data Worksheets – Weekday AM, PM and Saturday Mid-Day Peak Hours

C. Traffic Signal Warrants

D. Caltrans Freeway Segment Analysis Worksheets

E. Caltrans Intersection Analysis Worksheets

F. Caltrans Ramp Queuing Worksheets

TRAFFIC IMPACT STUDY

FLAIR SPECTRUM SPECIFIC PLAN

City of El Monte, California
October 22, 2014

1.0 INTRODUCTION

This traffic analysis has been conducted to identify and evaluate the potential traffic impacts of the proposed Flair Spectrum Specific Plan (proposed project) on the surrounding street system. The Specific Plan is located within the Flair park area of the City of El Monte, California. The proposed project site is situated along the southeast corner of the Flair Drive/Rio Hondo Avenue intersection. The proposed project site and general vicinity are shown in ***Figure 1-1***.

The traffic analysis follows City of El Monte traffic study guidelines and is consistent with traffic impact assessment guidelines set forth in the Los Angeles County Congestion Management Program[1]. This traffic analysis evaluates potential project-related impacts at 46 key intersections in the vicinity of the proposed project site. The study intersections were determined in consultation with City of El Monte staff. The Intersection Capacity Utilization method was used to determine volume-to-capacity ratios and corresponding Levels of Service at the study intersections. A review also was conducted of Los Angeles County Metropolitan Transportation Authority freeway and intersection monitoring stations to determine if a Congestion Management Program transportation impact assessment analysis is required for the proposed project. Potential traffic effects to the State of California Department of Transportation (Caltrans) highway system have also been reviewed as part of this traffic study.

While the proposed project site is situated within the jurisdiction of the City of El Monte, the traffic study also evaluates potential traffic impacts associated with the project at study intersections located in adjoining jurisdictions. Specifically, locations within the cities of Arcadia, Rosemead, San Gabriel, South El Monte, and Temple City have been included. Potential traffic impacts to these study intersections were determined using the impact criteria of the respective jurisdiction. The Intersection Capacity Utilization method was used to determine Volume-to-Capacity ratios and corresponding Levels of Service at the study intersections located in the above cities neighboring the City of El Monte.

This study (i) presents existing traffic volumes, (ii) includes existing traffic volumes with the forecast traffic volumes from the proposed project, (iii) recommends mitigation measures, where necessary, (iv) forecasts future cumulative baseline traffic volumes (i.e., for years 2016, 2019, and 2035, (v) forecasts future traffic volumes with the proposed project (i.e., for the Phase I project in year 2016 and the build-out of the project in both year 2019 and year 2035), (vi) determines future forecast with project-related impacts for each future analysis condition, and (vii) recommends mitigation measures, where necessary.

[1] *2010 Congestion Management Program*, Los Angeles County Metropolitan Transportation Authority, October 2010.

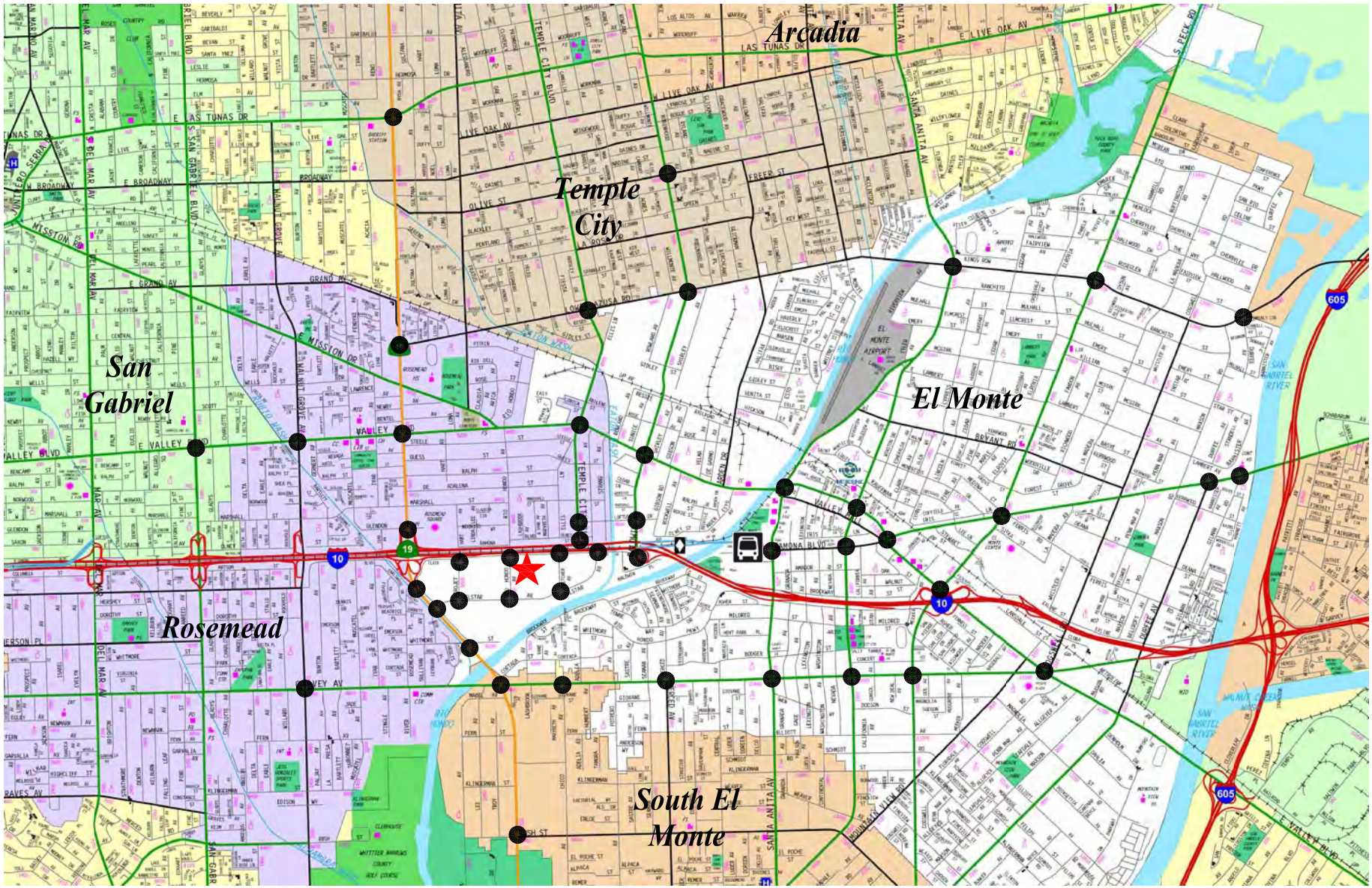

NOT TO SCALE

MAP SOURCE: RAND MCNALLY & COMPANY

PROJECT SITE

STUDY INTERSECTION

EL MONTE BUS STATION

METROLINK TRAIN STATION

FIGURE 1-1
VICINITY MAP

LINSCOTT, LAW & GREENSPAN, engineers

FLAIR SPECTRUM SPECIFIC PLAN

o:\job_file\4074\dwg\f1-1.dwg LDP 12:49:34 08/25/2014 rodriquez

1.1 Study Area

Upon initial coordination with City of El Monte staff, 40 study intersections were identified for evaluation during the weekday morning and afternoon peak hours as well as Saturday mid-day peak hour. After receipt of the Notice of Preparation (NOP) comments in response to the notice of the preparation of an Environmental Impact Report (EIR) for the project, an additional six (6) locations were added to the study area for analysis purposes. The 46 study intersections provide local access to the study area and define the extent of the boundaries for this traffic impact analysis. Further discussion of the existing street system and study area is provided in Section 3.0.

The general location of the project in relation to the study locations and surrounding street system is presented in *Figure 1–1*. The traffic analysis study area is generally comprised of those locations which have the greatest potential to experience significant traffic impacts due to the proposed project as defined by the Lead Agency. In the traffic engineering practice, the study area generally includes those intersections that are:

a. Immediately adjacent or in close proximity to the project site;

b. In the vicinity of the project site that are documented to have current or projected future adverse operational issues; and

c. In the vicinity of the project site that are forecast to experience a relatively greater percentage of project-related vehicular turning movements (e.g., at freeway ramp intersections).

The locations selected for analysis were based on the above criteria, proposed project peak hour vehicle trip generation, the anticipated distribution of project vehicular trips and existing intersection/corridor operations.

2.0 PROJECT DESCRIPTION

The project site is located south of the I-10 San Bernardino Freeway and is bounded by Flair Drive to the north, commercial development and Telstar Avenue to the south, existing commercial uses to the east and Rio Hondo Avenue to the west. The proposed project site and general vicinity are shown in *Figure 1-1*.

2.1 Flair Park[2]

2.1.1 Flair Park History and Overview

Flair Park started as a small airfield with several small hangers and an unpaved runway located along the Rio Hondo River. The airport had several names: Western Air College, Rosemead Airport, Pasadena-Rosemead Airport, and Fletcher Airport. In the 1950s, it was the former headquarters and home to the Goodyear blimp for six months. After the airport closed in the 1960s, the Fletcher Aviation Corporation offered available land in Flair Park for the Dodgers to build a baseball stadium. However, that never came to fruition.

Flair Park eventually transitioned to aerospace and aviation manufacturing businesses. In 1952, the Fletcher Aviation Corporation, which specialized in the manufacturing of aircraft fuel tanks, left Pasadena to buy a large site in Flair Park. Between 1953 and 2010, Sargent Fletcher (formerly the Fletcher Aviation Corporation) continually manufactured aerial refueling systems, special purpose pods, and external fuel tanks. Aerojet General Corporation, a rocket and missile propulsion manufacturer, also had a facility in Flair Park (formerly at 9100 East Flair Drive).

Over the years Flair Park slowly transitioned from manufacturing to a professional office district with private companies and government agencies. T oday, some of the major companies and agencies located in Flair Park include Wells Fargo, Cathay Bank, East West Bank, the Internal Revenue Service, and the County of Los Angeles.

2.1.2 Flair Spectrum Specific Plan

The Flair Spectrum Specific Plan currently under preparation will support the long-term development and design of El Monte's professional and financial district center. The Specific Plan is a comprehensive policy and regulatory guidance document for the private use and development of all properties within the Flair Spectrum Specific Plan area. The Specific Plan defines the uses that are permitted and their location, as well as the design guidelines for buildings and related improvements on the site. The Specific Plan ensures that the area develops in a coordinated manner with adequate consideration of infrastructure, services and public safety. By providing the necessary regulatory and design guidance contained within the document, it ensures that the land within the Flair Spectrum Specific Plan implements the City of El Monte's design, land use, and economic development goals for Flair Park.

[2] Sources: *Flair Spectrum Specific Plan Administrative Draft*, October 2014, prepared by MIG; and *City of El Monte General Plan*, June 2011.

In 2011, the City comprehensively updated El Monte's General Plan "Vision El Monte." The General Plan update went through an active engagement process with City leaders, City staff, residents, property owners, community leaders, the business community, and many other stakeholders. The General Plan contains specific goals and policies for the Flair Park Strategic Area that focuses on community design, land use, and economic development.

The Specific Plan boundary is located in Flair Park. The Specific Plan area is bounded by Flair Drive and I-10 Freeway to the north and Rio Hondo Avenue to the west. To the east and south area established light industrial businesses and offices. These properties are bounded by Telstar Avenue to the south and Fletcher Avenue to the east. An aerial photograph of the Specific Plan boundary and Flair Park vicinity is contained in ***Figure 2-1***.

2.1.3 Flair Spectrum Specific Plan – City of El Monte General Plan Consistency

The Flair Spectrum Specific Plan is being prepared in conformance with the goals and policies of the Vision El Monte General Plan. The regulations, guidelines, and programs set forth in the Specific Plan must demonstrate consistency with the goals and policies set forth in the General Plan. The Circulation Element of the General Plan contains specific goals and policies concerning transportation and parking of which the Specific Plan must demonstrate consistency. El Monte's transportation assets, its role as a transit hub, and the vision for a range of safe, efficient, and pleasant transportation choices will provide the foundation for circulation goals, policies, and programs. Listed below is a summary that demonstrates that the Flair Spectrum Specific Plan will implement the goals and policies related to the Circulation Element of the General Plan.

- ***Circulation Element Goal C-1***

A regional freeway, rail and airport transportation system that meets the needs of business, facilitates efficient movement of goods, and minimizes adverse effects on El Monte's residential neighborhoods.

- ***Circulation Element Policy C-1.7***

Traffic Mitigations: Require cost of transportation mitigations and improvements needed for new development to be borne by applicants. For mitigation required for regionally significant projects, developers shall pay a fee to help fund a project-specific report (e.g., Caltrans Project Study Report [PSR]).

Flair Spectrum Specific Plan This policy is met by the Specific Plan through its fair-share funding of traffic mitigation to off-set the costs of street and intersection improvements as a result of the project. The Environmental Impact Report (EIR) associated with the Flair Spectrum Specific Plan will identify transportation mitigation measures and related improvements.

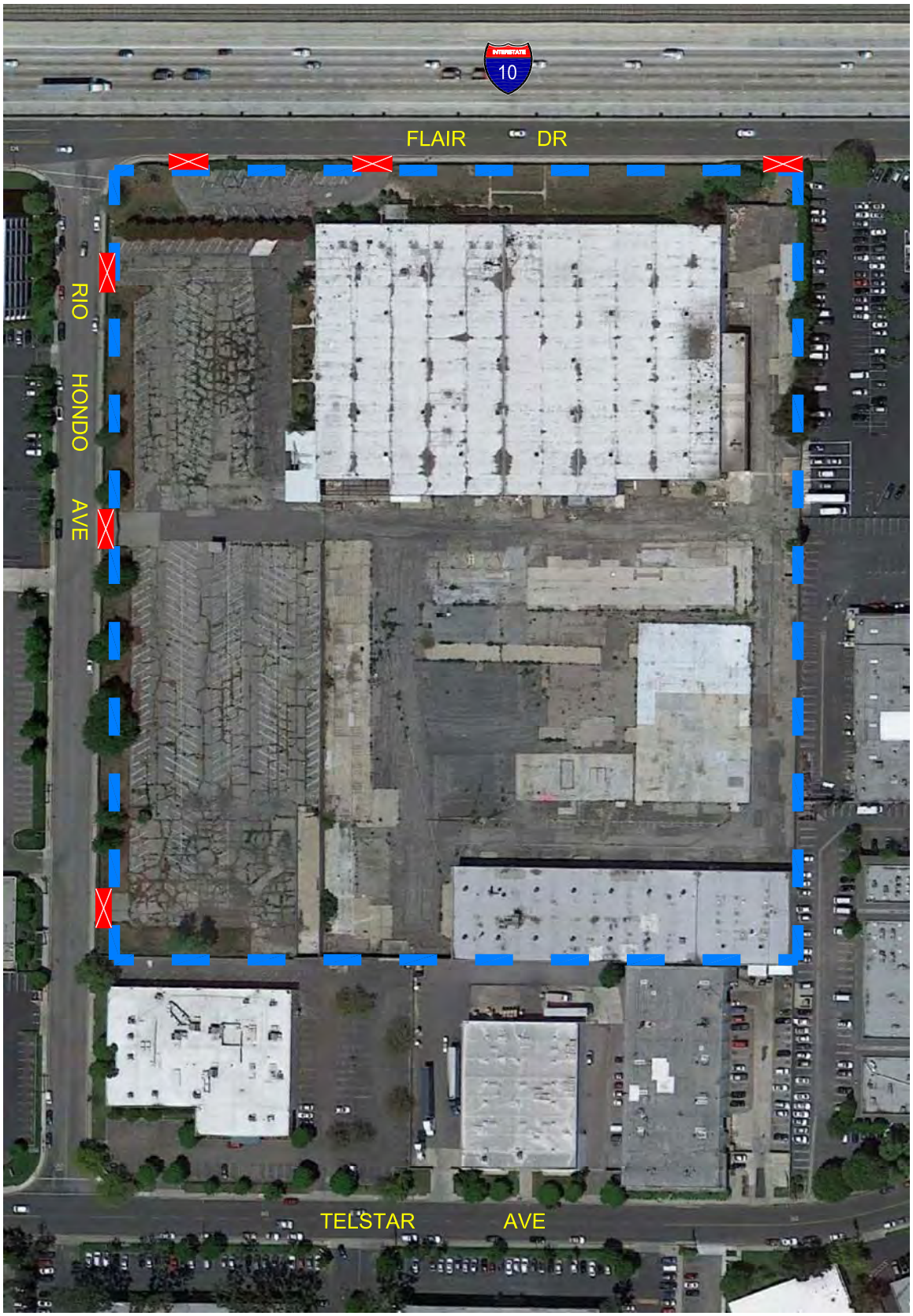

MAP SOURCE: GOOGLE EARTH

N
NOT TO SCALE

PROJECT STIE

EXISTING DRIVEWAY

FIGURE 2-1
AERIAL PHOTOGRAPH OF SPECIFIC PLAN BOUNDARY

LINSCOTT, LAW & GREENSPAN, engineers

FLAIR SPECTRUM SPECIFIC PLAN

o:\job_file\4074\dwg\f2-1.dwg LDP 08:22:35 09/30/2014 rodriquez

- ***Circulation Element Policy C-3.6***

Traffic Signal Management: Pursue development and implementation of a Traffic Management System, with a traffic management center in the City or a joint center with adjacent jurisdictions and/or County of Los Angeles, to coordinate and manage the City's traffic signal system, integrate operations on C ity streets, and implement advanced traffic management technologies where appropriate.

Flair Spectrum Specific Plan This policy is met by the Specific Plan through its fair-share funding of a traffic signal synchronization system as a mitigation measure. Refer to Section 12.0 of this report for additional discussion. The Environmental Impact Report (EIR) associated with the Flair Spectrum Specific Plan will identify transportation mitigation measures and related improvements.

- ***Circulation Element Goal C-5***

A connected, balanced, and integrated system of walking, biking, and equestrian paths and trails that is accessible and safe and connect to homes, residences, parks, and other community destinations.

- ***Circulation Element Policy C-5.3***

Bicycle Hubs: E stablish bike hubs in community (centralized locations with convenient bike parking for trip destinations or transfer to other transportation modes) at key transit nodes or commercial nodes.

Flair Spectrum Specific Plan The Specific Plan's development standards will require bicycle racks and lockers within parking structures. T hese facilities will be easily accessible to customers, employees, visitors, and residents.

- ***Circulation Element Policy C-5.6***

Pedestrian Amenities. Provide amenities along pedestrian routes, such as well-maintained and landscaped sidewalks, tree shade cover, benches, pedestrian phases at signalized intersections, and mid-block signalized or well-signed pedestrian crosswalks.

Flair Spectrum Specific Plan The street improvements along Flair Drive and Rio Hondo Avenue will include street-level building entrances, landscaping, and sidewalks that will provide access to surrounding Flair Park properties. The retail outlet center's street-level pedestrian entrances at the corner of Flair Drive and Rio Honda Avenue, and at the mid-block of Rio Hondo Avenue, will include public plazas to identify the entrances. The plazas will include additional landscaping and outdoor amenities. Internal public gathering spaces and plazas will include shade trees, benches, and other pedestrian amenities to create a comfortable environment.

- ***Circulation Element Goal C-6***

Integration of circulation and land use development policies and practices that support walking, bicycling, and use of transit through a variety of supportive land use development and urban design measures.

- ***Circulation Element Policy C-6.2***

New and Substantially Rehabilitated Development. Require new development to provide amenities for transit, bicyclists, and pedestrians and to provide connections to the bicycle and pedestrian networks where appropriate.

Flair Spectrum Specific Plan This policy is met by the Specific Plan through the development standards that require bicycle racks and lockers within the parking structures. These facilities will be easily accessible to customers, employees, visitors, and residents.

- ***Circulation Element Policy C-6.3***

Parking Districts. Encourage parking districts in the downtown, Flair Park, and other appropriate areas to enable the efficient and cost-effective provision and use of parking, including the possible construction of parking structures.

Flair Spectrum Specific Plan The Specific Plan's parking standards require that adequate parking spaces be provided within the parking structures to satisfy the demands for this mixed-use project. The development standards also require the efficient movement of vehicles and pedestrians within the on-site parking structures. Electronic signs will display the location of available parking spaces by level, and will assist in directing vehicles to available parking spaces. Pay-first parking kiosks will also reduce the queuing of vehicles exiting the parking structures.

- ***Circulation Element Policy C-6.4***

Parking Supply. Require residential, commercial, industrial, and other land uses in the community to provide adequate on-site parking for their respective uses; allow for joint-use parking provided the parking needs of individual uses are satisfied.

Flair Spectrum Specific Plan The parking requirements contained within the Specific Plan require that adequate on-site parking spaces be available to satisfy the parking demands for the retail outlet center, hotel, and residential land uses. The parking structures include a joint-use/shared parking program to efficiently utilize all parking spaces, while providing sufficient parking spaces to meet the anticipated peak parking demand. A valet parking management system for hotel patrons will be provided and the residential towers may also incorporate a valet parking system. These systems are expected to create an efficient utilization of parking spaces.

2.2 Existing Setting and Project Site

The Specific Plan area consists of approximately 14.6 acres within three parcels (APN: 8581-001-029, 8581-001-025, and 8581-001-046). The site formerly housed several industrial buildings operated by Sargent Fletcher, a subsidiary company of Cobham. The majority of the site is paved in asphalt and was used for parking. In 2010, Sargent Fletcher abandoned the buildings and site, and subsequently sold the land. In 2014, all of the buildings located on the site were demolished.

Vehicular access to the existing project site is presently provided via three driveways on Rio Hondo Avenue and three driveways on Flair Drive. Further discussion of the existing project site access scheme is provided in Section 3.0 herein.

2.3 Proposed Project Description

The proposed Flair Spectrum Specific Plan consists of the construction of a mixed-use development with hotel, restaurant, outlet mall and residential land use components. The proposed project will be constructed in two development phases as outlined below:

- Phase I:
    - 250-Room Full-Service Hotel
    - 640,000 square feet (SF) of Outlet Mall
    - 50,000 GSF of Quality Restaurant
- Phase II:
    - 600-Dwelling Unit Condominium Complex

Phase I of the proposed project is planned to be completed and occupied by year 2016. Phase II of the proposed project is planned to be completed and occupied by year 2019. The site plan for the proposed project is illustrated in ***Figure 2-2***.

It is important to note that while the project's build-out parking supply of 3,491 parking spaces will be constructed as part of Phase I, only 2,591 of those spaces will be available for use during Phase II construction activities. Therefore, with completion of the Flair Spectrum Specific Plan project, a total of 3,491 parking spaces will be provided. Section 4.0 of this traffic study includes a detailed review of the Code parking requirement and available parking supply analyses for both Phase I and Phase II. Vehicular access to the project site will be provided via a total of two (2) driveways on Flair Drive and three (3) driveways on Rio Hondo Avenue. Further discussion of the project's site access and circulation scheme are provided in Section 3.0 herein.

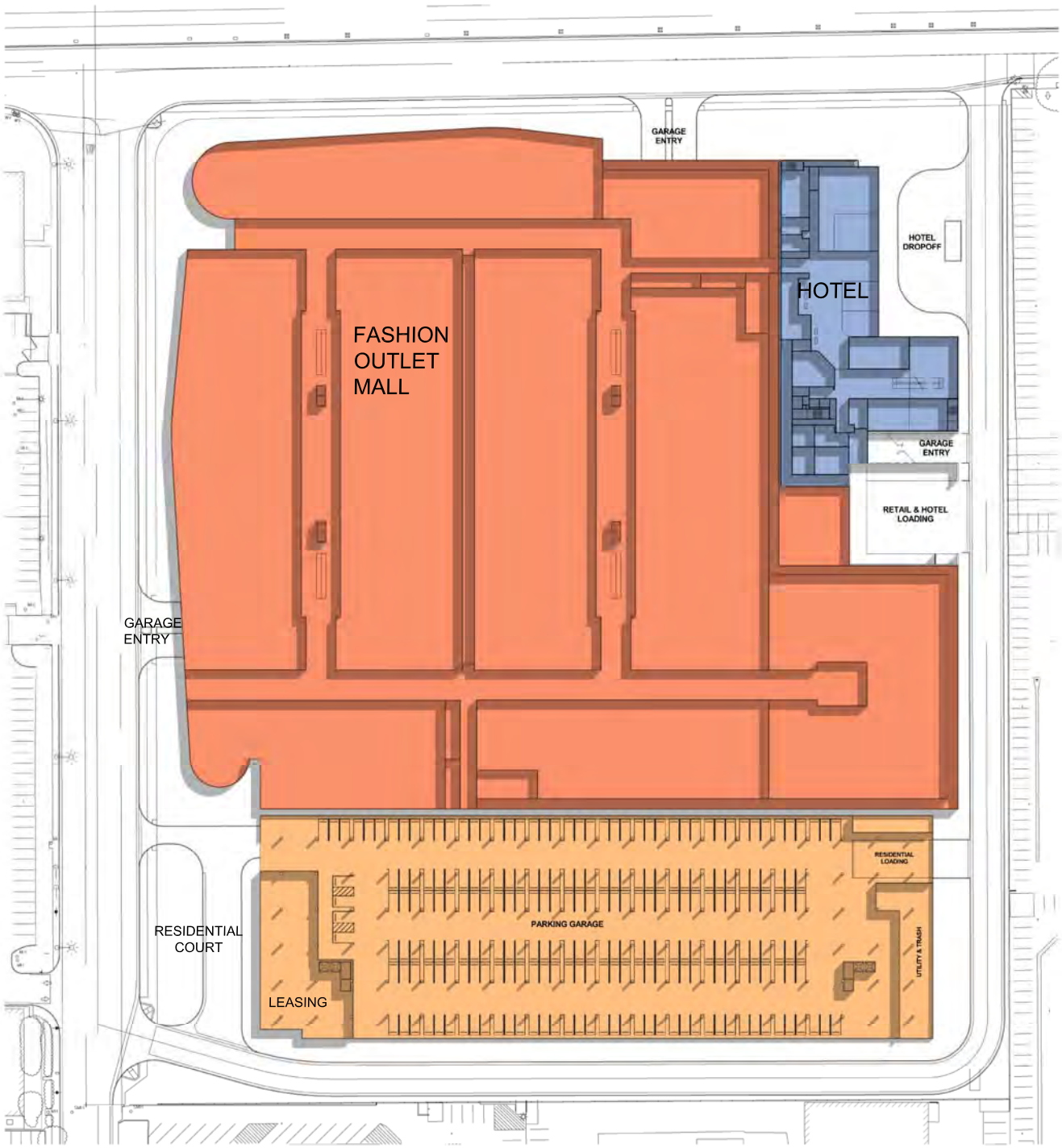

SOURCE: SVA ARCHITECTS

N

NOT TO SCALE

FIGURE 2-2
PROJECT SITE PLAN

LINSCOTT, LAW & GREENSPAN, engineers

FLAIR SPECTRUM SPECIFIC PLAN

o:\job_file\4074\dwg\f2-2.dwg LDP 08:28:39 09/30/2014 rodriquez

3.0 SITE ACCESS AND CIRCULATION

One of the principle objectives of the proposed project is to create a mixed-use urban village that would be linked to other working, shopping, residential, and recreational areas in the region through non-automotive means so as to further regional planning objectives of reducing dependency on the automobile and reducing the adverse environmental effects of such dependency (air pollution, fossil fuel consumption, greenhouse gas production, and congestion). The project site is located in close proximity to the Metrolink line with an existing station nearby at the El Monte Transit Station. The El Monte station is located two stops from Union Station in Downtown Los Angeles. Additionally, the project site is situated approximately one mile west of the El Monte Bus Station.

The proposed project also would create a pedestrian district within the Flair Park area that will connect to the downtown El Monte area and local public bus transit facilities. Further, the project is being designed so as to enhance and promote usage of other transportation modes such as bicycling, walking and both rail and public bus transit.

The project site is located within immediate proximity of several multi-modal corridors such as Rosemead Boulevard, Telstar Avenue, etc.. Multi-modal corridors are roadways that facilitate efficient and convenient travel by all appropriate modes (e.g., pedestrian, bicycle, regional and local bus transit, vehicular, etc.). These types of roadways promote an environment where different modes of travel can co-exist and share the roadway, providing seamless connections and reinforcing each other to develop a balanced and efficient transportation system.

The proposed site access and circulation scheme for the project is displayed in *Figure 2–2*. Descriptions of the existing and proposed site access and circulation schemes are provided in the following subsections.

3.1 Existing Vehicular Site Access

Vehicular access to the existing project site is presently provided via three driveways on Rio Hondo Avenue and three driveways on Flair Drive. The existing site driveways currently accommodate full access (i.e., left-turn and right-turn ingress and egress turning movements).

3.2 Proposed Project Vehicular Site Access

The proposed site access scheme for the proposed project is displayed in *Figure 2-2*. Access to the proposed project site will be provided via two (2) driveways on Flair Drive and three (3) driveways on Rio Hondo Avenue. Brief descriptions of the planned project site access points are provided in the following paragraphs.

- *Westerly Flair Drive Project Driveway (Main Commercial Driveway)*

  The primary commercial driveway on Flair Drive will serve the retail outlet mall and restaurant uses and is planned to provide two inbound travel lanes and two outbound travel lanes separated by a raised median island. This driveway is planned to provide full access

(i.e., both left-turn and right-turn ingress and egress turning movements). A westbound left-turn pocket is planned to be provided via roadway restriping in addition to an eastbound right-turn only lane. A dedication and improvement is also planned along the south side of Flair Drive along the project frontage. The project site driveway will be constructed to City of El Monte design standards.

- *Easterly Flair Drive Project Driveway (Hotel/Residential/Service Driveway)*

  This driveway will primarily serve the hotel patrons and secondarily serve as both a service driveway and residential driveway (i.e., since the driveway serves the service drive which runs along the easterly and southerly project frontages). Access to the proposed hotel porte cochere will also be provided via the easterly Flair Drive driveway. The hotel service area will be able to be accessed from this driveway in addition to the service access planned for the residential towers. This driveway is planned to provide one inbound and one outbound travel lane and is proposed to provide full access (i.e., both left-turn and right-turn ingress and egress turning movements). Due to the existing Flair Drive right-of-way east of the project site, a westbound left-turn only lane at the easterly Flair Drive driveway is not able to be accommodated. The project site driveway will be constructed to City of El Monte design standards.

- *Northernmost Rio Hondo Avenue Project Driveway (Main Commercial Driveway)*

  The primary commercial driveway on Rio Hondo Avenue will serve the retail outlet mall and restaurant uses and is planned to provide two inbound travel lanes and two outbound travel lanes separated by a raised median island. This driveway will be aligned/placed across from the existing UEI College driveway located along the west side of Rio Hondo Avenue. In placing the driveway at this location, a northbound left-turn only lane can be restriped in order to provide access to the College driveway and a two-way left-turn lane can be provided that would serve southbound left-turns into the Flair Spectrum project site. The project site driveway will be constructed to City of El Monte design standards.

- *Southernmost Rio Hondo Avenue Project Driveway (Main Residential Driveway)*

  This Rio Hondo Avenue driveway is located near the south property line of the project site and will serve as the primary access point for the planned residential condominium towers (through the parking podium) and the residential motor court located at the main entrance of the residential towers. The residential motor court will provide drop-off and pick-up areas for residents and visitors (i.e., which will be located along the west side of the westerly residential tower). The driveway will also provide access to the service drive which runs along the southerly and easterly project frontages. The main access to the residential podium parking structure will be from the east-west segment of this service drive. The Rio Hondo Avenue driveway is planned to provide one inbound travel lane and one outbound travel lane. This driveway is planned to provide full access and has been placed so as to minimize

the offset with the existing driveway located along the west side of Rio Hondo Avenue. Through the planned roadway dedication and widening, a southbound left-turn only lane can be restriped in order to provide access to the residential/service drive. In addition, a northbound left-turn only lane can also be provided for the existing driveway located on the west side of Rio Hondo Avenue via roadway restriping. The project site driveway will be constructed to City of El Monte design standards.

- *Central Rio Hondo Avenue Project Driveway*

  This driveway is located just north of the southernmost Rio Hondo Avenue driveway and will serve exiting traffic from both the planned residential motor court area and the parking structure beneath the residential towers. This driveway will be limited to right-turn egress turning movements only, due to the proximity of the southbound left-turn only lane at the main (southernmost) Rio Hondo Avenue driveway. The project site driveway will be constructed to City of El Monte design standards.

- *Proposed Flair Drive Bus Turn Out*

  A bus turn out lane is also proposed along the Flair Drive project frontage and is planned to be located between the planned main commercial driveway and the hotel/service/residential driveway. This area would provide a minimum of a 12-foot wide lane for the purposes of accommodating tour bus arrivals and departures and patron boardings and alightings. The area would be constructed to City of El Monte design standards.

3.3 Pedestrian Access

The proposed project should be designed to encourage pedestrian activity and walking as a transportation mode[3]. The proposed project will provide landscaping along the periphery and interior of the project site. As indicated in *Figure 2–2*, the walkways planned within the proposed project will connect to adjacent sidewalks in a manner that promotes walkability. Walkability is a term for the extent to which walking is readily available as a safe, connected, accessible and pleasant mode of transport. There are several criteria that are widely accepted as key aspects of the walkability of urban areas that should be satisfied. The underlying principle is that pedestrians should not be delayed, diverted, or placed in danger. The widely accepted characteristics of walkability are as follows:

- Connectivity: People can walk from one place to another without encountering major obstacles, obstructions, or loss of connectivity.

- Convivial: Pedestrian routes are friendly and attractive, and are perceived as such by pedestrians.

[3] For example, refer to http://www.walkscore.com/, which generates a walkability score of approximately 58 (Somewhat Walkable) out of 100 for the project site. Walk Score calculates the walkability of an address by locating nearby stores, restaurants, schools, parks, etc. Walk Score measures how easy it is to live a car-lite lifestyle—not how pretty the area is for walking.

- Conspicuous: Suitable levels of lighting, visibility and surveillance over its entire length, with high quality delineation and signage.

- Comfortable: High quality and well-maintained footpaths of suitable widths, attractive landscaping and architecture, shelter and rest spaces, and a suitable allocation of roadspace to pedestrians.

- Convenient: Walking is a realistic travel choice, partly because of the impact of the other criteria set forth above, but also because walking routes are of a suitable length as a result of land use planning with minimal delays.

A review of the project site plan and pedestrian walkway network indicates that these five primary characteristics are accommodated as part of the proposed project. The project site is adjacent to and accessible from nearby commercial uses and other amenities along adjacent arterial corridors, as well as adjacent public bus transit stops. The pedestrian walkways within the site and the adjacent sidewalks will be appropriately landscaped and designed to provide a friendly walking environment. Additionally, the walkways will be well lit and include appropriate wayfinding signage. Thus, the project will comply with the City's Transportation Demand Management program (refer to Chapter 5.92, Transportation Demand Management Program in the City of El Monte Zoning Code) which requires nonresidential development of 100,000 square feet or more to provide sidewalks or other designated pathways following direct and safe routes from the external pedestrian circulation system to each building in the development.

3.4 Bicycle Access

The Federal and State transportation system recognizes three primary bikeway facilities: Bicycle Paths (Class I), Bicycle Lanes (Class II), and Bicycle Routes (Class III). Bicycle Paths (Class I) are exclusive car free facilities that are typically not located within a roadway area. Bicycle Lanes (Class II) are part of the street design that is dedicated only for bicycles and identified by a striped lane separating vehicle lanes from bicycle lanes. Bicycle Routes (Class III) are preferably located on collector and lower volume arterial streets.

Use of bicycles as a transportation mode to and from the project site will be encouraged by the provision of ample and safe parking. As identified in the City Zoning Code (refer to Chapter 5.92, Transportation Demand Management Program, and Chapter 17.45.100, Vertical Mixed-Use Development), the required number of bicycle parking spaces for nonresidential and residential development is listed below:

- "Bicycle racks or other secure bicycle parking shall be provided to accommodate four (4) bicycles per the first 50,000 square feet of nonresidential development and one bicycle per each additional fifty thousand (50,000) square feet of nonresidential development. Calculations which result in a fraction of 0.5 or higher shall be rounded up to the nearest whole number. A bicycle parking facility may also be a fully enclosed space or locker accessible only to the owner or operator of the bicycle, which protects the bike from

inclement weather. Specific facilities and location (e.g., provision of racks, lockers, or locked room) shall be to the satisfaction of the city."

- "Bicycle Storage Areas. All vertical mixed use developments shall provide common bicycle storage areas for the residents as follows: two (2) bicycle storage units for every five (5) dwelling units for the first twenty (20) developments, and one bicycle storage unit for every five (5) additional dwelling units."

Based on information provided by the project applicant, use of bicycles will be strongly encouraged and the number of bicycle parking spaces to be provided as part of the proposed project will more than satisfy the Code parking requirement. The type of bicycle spaces and dimensions will be provided based on City Code requirements, as well as to meet the needs of a variety of bicycles. The bicycle spaces will be provided in readily accessible locations. The selected locations will encourage use and maintain visibility for personal safety and theft protection. As needed, the project applicant will include site improvements such as planting and trash receptacles wherever bicycle parking is provided. Further, appropriate lighting will be provided to increase safety and provide theft protection during night-time parking.

3.5 Proximity of Nearby Trail System

The southern boundary of Flair Park is the Rio Hondo. The river, now channelized, is a tributary of the Los Angeles River and is a Westside segment of the Emerald Necklace. The southern bank of the Rio Hondo includes a bike path, which connects portions of Arcadia and Irwindale to the Whittier Narrows Recreation Area, Montebello, Pico Rivera, and ultimately to the Los Angeles River. At Rosemead Boulevard, the trail has an underpass beneath the roadway. There are also access points at Rosemead Boulevard which connect to Lashbrook Park in the City of El Monte. Future plans exist for a new trail along the northern bank of the river.

4.0 PROJECT PARKING

This section summarizes the review of the parking requirements for the proposed project through strict application of the City of El Monte Municipal Code and the planned project parking supply. The code parking requirements for any development project is ultimately determined by the Lead Agency. It is anticipated that the proposed project will provide the required parking for both Phase I and Phase II conditions as determined by the City of El Monte prior to issuance of the certificate of occupancy for each respective phase.

4.1 City of El Monte Code Parking Requirements

The City of El Monte Municipal Code off-street parking requirements are set forth in Title 17 (Zoning), Chapter 17.08 (Parking Requirements), Section 17.08.090 (Parking requirements for specific land uses) of the Municipal Code. Furthermore, as the proposed project is located within a mixed/multiuse zone (MMU), the corresponding parking requirements for those specified land uses are set forth in Chapter 17.45 (Mixed/Multiuse Zone), Section 050 (Parking regulations). In accordance with the Municipal Code parking regulations applicable to the MMU, the following parking requirements have been identified for the project:

- Phase I:
  - Hotel: 1.0 space per rentable room
  - Retail:

    First 20,000 GSF: 4.0 spaces per 1,000 GSF

    Next 30,000 GSF: 2.5 spaces per 1,000 GSF

    After 50,000 GSF: 2.0 spaces per 1,000 GSF
  - Restaurant: 1.0 space per 150 GSF (includes outdoor dining space)
- Phase II:
  - Multi-family Residential and Condominiums:

    1.7 spaces for each 1-bedroom units

    2.0 spaces for each 2-bedroom units

    2.5 spaces for each 3 or more-bedroom units

    Additional Guest Parking: 0.25 space per unit

In addition, although not specifically identified in the Municipal Code, ancillary uses within the proposed hotel component (i.e., banquet space, meeting space, restaurant/bar space, etc.) are assumed to require separate parking requirements. The Code parking requirements for both Phase I and Phase II of the proposed project are summarized in ***Table 4-1***.

As shown in *Table 4-1*, a total of 2,184 parking spaces are required for Phase I of the proposed Flair Spectrum Specific Plan project, while a total of 1,297 spaces are required for Phase II. Therefore, through direct application of the City of El Monte Municipal Code parking requirements to the proposed project at full build-out a total of 3,481 parking spaces (i.e., 2,184 spaces + 1,297 spaces = 3,481 parking spaces) would be required.

4.2 Proposed Parking Supply

As discussed previously, Phase I of the proposed project includes the hotel, outlet mall, and restaurant components while Phase II includes the residential condominium component. It is important to note that during Phase I construction activities all parking on the residential site will also be constructed. Based on information provided by the applicant and project team, the proposed hotel will include two levels of below-grade parking with 341 parking spaces. For the retail/restaurant components, a total of 1,050 parking spaces are planned to be provided within the basement level, including 750 spaces beneath the retail uses and 300 spaces beneath the future Phase II residential towers. In addition, all seven above-grade/podium levels of parking totaling 2,100 parking spaces will also be constructed concurrent with the Phase I project and will be located beneath the Phase II residential towers (i.e., 300 spaces on each of the seven above-grade/podium levels). As a result, with completion of the Phase I project, all 3,491 parking spaces associated with the build-out of the Flair Spectrum Specific Plan project will be constructed.

It should be noted that while all 3,491 parking spaces associated with the project at build-out will be constructed during Phase I, the three uppermost parking levels (i.e., totaling 900 spaces) are not assumed to be available when construction of the condominium towers above the parking podium commences. Therefore, a total of 2,591 parking spaces will be made available for use during Phase I operations. .

4.3 Parking Supply-Code Parking Requirement Summary

As discussed in Section 4.1 and summarized in *Table 4-1*, a total of 2,184 parking spaces would be required for Phase I of the proposed Flair Spectrum Specific Plan project through strict application of the City of El Monte Municipal Code. The proposed Phase I project parking summary is summarized in ***Table 4-2***. As shown, a total of 2,591 parking spaces is planned to be available as part of the Phase I project. Therefore, it is concluded that more than sufficient parking is planned to meet the Municipal Code parking requirements. As shown in *Table 4-2*, a surplus of 407 parking spaces would exist under Phase I conditions (i.e., 2,591 available Phase I parking spaces – 2,184 Phase I Code-required parking spaces = 407 surplus parking spaces).

TABLE 4-1
CODE PARKING REQUIREMENTS [1]

PROJECT COMPONENT	SIZE	APPLICABLE CODE RATE [1]	CODE PARKING REQUIREMENT (Spaces)
Hotel			
Hotel Rooms	250 Rms	1 space / rentable room	250
Banquet/Meeting Space	19,000 GLSF	1 space / 75 SF usable area	253
Restaurant/Bar	2,000 GSF	1 space / 150 GSF	13
Subtotal			516
Retail			
0-20,000 GSF	20,000 GSF	1 space / 250 GSF	80
20,001-50,000 GSF	30,000 GSF	1 space / 400 GSF	75
> 50,000 SF	590,000 GSF	1 space / 500 GSF	1,180
Subtotal			1,335
Restaurant			
Restaurant	50,000 GSF	1 space / 150 GSF	333
Phase I Project Code Parking Requirement [1]:			**2,184**
Residential Condominiums			
One-Bedroom Unit	198 DU	1.7 spaces / unit	337
Two-Bedroom Unit	390 DU	2.0 spaces / unit	780
Three or More-Bedroom Unit	12 DU	2.5 spaces / unit	30
Guest/Visitor	600 DU	0.25 spaces / unit	150
Subtotal			1,297
Phase II Project Code Parking Requirement [1]:			**1,297**
Project Buildout Code Parking Requirement (Phase I + Phase II)			**3,481**

[1] Based on City of El Monte Municipal Code Chapter 17.08 (Parking Requirements) and Chapter 17.45 (Mixed/Multiuse Zone).

Table 4-2
PROJECT PARKING SUMMARY

Flair Spectrum Specific Plan Phase I Conditions:		
Phase I Code Parking Requirement [1]	2,184	Spaces
Phase I Parking Supply [2]	2,591	Spaces
Phase I Parking Surplus / (Deficit)	407	Spaces
Flair Spectrum Specific Plan Build-out (Phase I + Phase II) Conditions:		
Build-out Code Parking Requirement [1]	3,481	Spaces
Build-out Parking Supply [2]	3,491	Spaces
Build-out Parking Surplus / (Deficit)	10	Spaces

Notes:

[1] Based on City of El Monte Municipal Code Chapter 17.08 and Chapter 17.45. Refer to Table 4-1 for the detailed code parking requirement calculations.

[2] Proposed on-site parking supply provided by the project architect. It should be noted that while all 3,491 parking spaces will be constructed during Phase I, only 2,591 spaces will be made available for use during Phase I operations.

As discussed in Section 4.1 above and summarized in *Table 4-1*, a total of 3,481 parking spaces would be required for full build-out of the proposed Flair Spectrum Specific Plan project (i.e., Phase I plus Phase II) through strict application of the City of El Monte Municipal Code. The proposed project parking summary at build-out is also summarized in *Table 4-2*. As shown, a total of 3,491 parking spaces is planned to be constructed as part of the Flair Spectrum Specific Plan project. As shown in *Table 4-2*, a surplus of ten parking spaces would exist for the proposed project at build-out (i.e., 3,491 total parking spaces – 3,481 total Code-required parking spaces = ten surplus parking spaces). Therefore, it is concluded that the parking supply at full build-out of the project exceeds that required through strict application of the City of El Monte Municipal Code.

5.0 EXISTING STREET SYSTEM

5.1 Regional Highway System

Regional access to the project site is provided by I-10 (San Bernardino) Freeway as shown in *Figure 1-1*. I-10 (San Bernardino) Freeway is a major east-west oriented freeway that extends from the City of Santa Monica to the west to San Bernardino and further to the State of Arizona to the east. In the project vicinity, four mainline travel lanes and two High Occupancy Toll (HOT) travel lanes are provided in each direction. In the immediate project vicinity, access to I-10 Freeway is provided via Rosemead Boulevard, Temple City Avenue and Baldwin Avenue. Full freeway interchanges (i.e., eastbound and westbound on and off-ramps) are provided at Rosemead Boulevard. Eastbound I-10 Freeway On and Off-ramps are provided at Aerojet Avenue and Baldwin Avenue and Westbound I-10 Freeway On and Off-ramps are provided at Temple City Avenue.

5.2 Local Street System

Immediate access to the project site is planned to be provided via Rio Hondo Avenue and Flair Drive. The list of 46 study intersections were determined in consultation with City staff and also based on NOP comments received by City staff. The list of 46 study intersections selected for analysis of potential traffic impacts related to the proposed project is presented in ***Table 5-1*** (jurisdiction of each intersection is noted in the worksheet). The study intersections selected for analysis in the traffic study also are noted in *Figure 1-1*. Of the 46 existing study intersections, 35 study intersections are presently controlled by traffic signals and 11 study intersections are currently stop-sign controlled. The existing lane configurations and intersection controls at the study intersections are displayed in ***Figure 5-1***.

5.3 Roadway Classifications

The City of El Monte utilizes the roadway categories recognized by regional, state and federal transportation agencies. There are four categories in the roadway hierarchy, ranging from freeways with the highest capacity to two-lane undivided roadways with the lowest capacity. The roadway categories are summarized as follows:

- ***Freeways*** are limited-access and high speed travel ways included in the state and federal highway systems. Their purpose is to carry regional through-traffic. Access is provided by interchanges with typical spacing of one mile or greater. No local access is provided to adjacent land uses.

- ***Arterial*** roadways are major streets that primarily serve through-traffic and provide access to abutting properties as a secondary function. Arterials are generally designed with two to six travel lanes and their major intersections are signalized. This roadway type is divided into two categories: principal and minor arterials. Principal arterials are typically four-or-more lane roadways and serve both local and regional through-traffic. Minor arterials are typically two-to-four lane streets that service local and commute traffic.

Table 5-1
LIST OF STUDY INTERSECTIONS

MAP NO.	LOCATION	TRAFFIC CONTROL	JURISDICTION
1	San Gabriel Boulevard/Valley Boulevard	Signalized	City of San Gabriel
2	Walnut Grove Avenue/Valley Boulevard	Signalized	City of Rosemead
3	Walnut Grove Avenue/Garvey Avenue	Signalized	City of Rosemead
4	Rosemead Boulevard (SR-164)/Valley Boulevard	Signalized	City of Rosemead
5	Rosemead Boulevard (SR-164)/Glendon Way-I-10 WB Ramps	Signalized	City of Rosemead
6	Rosemead Boulevard (SR-164)/I-10 EB Ramps	Unsignalized	City of El Monte/ City of Rosemead
7	Rosemead Boulevard (SR-164)/Telstar Avenue	Signalized	City of El Monte/ City of Rosemead
8	Rosemead Boulevard (SR-164)/Whitmore Street	Signalized	City of El Monte/ City of Rosemead
9	Rosemead Boulevard (SR-164)/Garvey Avenue	Signalized	City of South El Monte
10	Aerojet Avenue-I-10 EB Ramps/Flair Drive	Unsignalized	City of El Monte
11	Aerojet Avenue/Telstar Avenue	Unsignalized	City of El Monte
12	Rio Hondo Avenue/Flair Drive	Unsignalized	City of El Monte
13	Rio Hondo Avenue/Telstar Avenue	Unsignalized	City of El Monte
14	Fletcher Avenue/Flair Drive	Unsignalized	City of El Monte
15	Fletcher Avenue/Telstar Avenue	Unsignalized	City of El Monte
16	Telstar Avenue/Flair Drive	Unsignalized	City of El Monte
17	Chico Avenue/Garvey Avenue	Signalized	City of South El Monte
18	Temple City Boulevard/Lower Azusa Road	Signalized	City of Temple City
19	Temple City Boulevard/Valley Boulevard	Signalized	City of Rosemead
20	Temple City Boulevard/Loftus Drive	Signalized	City of Rosemead
21	Temple City Boulevard/I-10 WB Ramps	Unsignalized	City of Rosemead
22	Baldwin Avenue/Valley Boulevard	Signalized	City of El Monte
23	Baldwin Avenue/Loftus Drive	Signalized	City of El Monte
24	Baldwin Avenue/Flair Drive-I-10 EB Ramps	Unsignalized	City of El Monte
25	Merced Avenue/Garvey Avenue	Signalized	City of El Monte
26	Santa Anita Avenue/Lower Azusa Road	Signalized	City of El Monte
27	Santa Anita Avenue/Valley Boulevard	Signalized	City of El Monte
28	Santa Anita Avenue/Ramona Boulevard	Signalized	City of El Monte
29	Santa Anita Avenue/Garvey Avenue	Signalized	City of El Monte
30	Tyler Avenue/Valley Boulevard	Signalized	City of El Monte
31	Tyler Avenue/Ramona Boulevard	Signalized	City of El Monte
32	Tyler Avenue/Garvey Avenue	Signalized	City of El Monte
33	Valley Boulevard-Valley Mall/Ramona Boulevard	Signalized	City of El Monte
34	Peck Road/Lower Azusa Road	Signalized	City of El Monte
35	Peck Road/Ramona Boulevard	Signalized	City of El Monte
36	Peck Road/Valley Boulevard	Signalized	City of El Monte
37	Peck Road/Garvey Avenue	Signalized	City of El Monte
38	Valley Boulevard/Garvey Avenue	Signalized	City of El Monte
39	Roseglen Street-Durfee Avenue/Lower Azusa Road	Signalized	City of El Monte/ City of Arcadia
40	Durfee Avenue/Ramona Boulevard	Unsignalized	City of El Monte

Table 5-1 (Continued)
LIST OF STUDY INTERSECTIONS

MAP NO.	LOCATION	TRAFFIC CONTROL	JURISDICTION
41	Rosemead Boulevard (SR-164)/Las Tunas Drive	Signalized	City of Temple City
42	Rosemead Boulevard (SR-164)/Lower Azusa Road	Signalized	City of Rosemead
43	Rosemead Boulevard (SR-164)/Rush Street	Signalized	City of South El Monte
44	Baldwin Avenue/Olive Street	Signalized	City of Temple City
45	Baldwin Avenue/Lower Azusa Road	Signalized	City of El Monte City of Temple City
46	Gilman Road/Ramona Boulevard	Signalized	City of El Monte

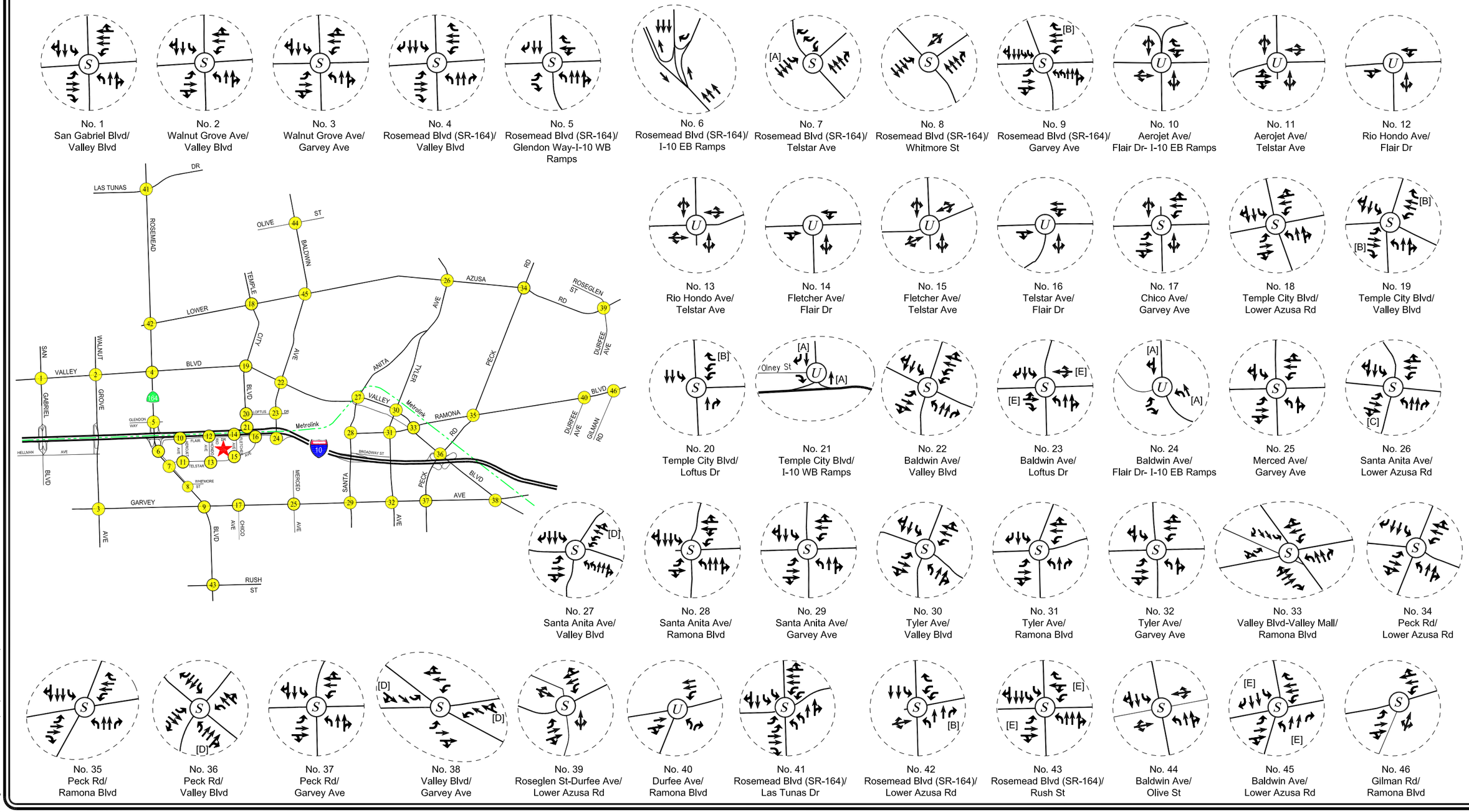

NOT TO SCALE

★	PROJECT SITE
(S)	SIGNALIZED INTERSECTION
(U)	UNSIGNALIZED INTERSECTION

[A]	FREE-FLOW MOVEMENT
[B]	OVERLAP PHASE
[C]	NO RIGHT-TURN ON RED
[D]	BYPASS RIGHT-TURN
[E]	SPLIT PHASE OPERATION

LINSCOTT, LAW & GREENSPAN, engineers

FIGURE 5-1
EXISTING LANE CONFIGURATIONS

FLAIR SPECTRUM SPECIFIC PLAN

o:\job_file\4074\dwg\f5-1.dwg LDP 16:49:52 09/29/2014 rodriquez

Pursuant to the City of El Monte "Vision El Monte" General Plan June 2011, the following definitions are noted for Arterial Roadways:

Major Arterials: These streets carry traffic from one part of the City to another and connect to the highway system. Arterials carry the highest volumes of traffic at the highest speeds, with limited interference to traffic flow. Major arterials typically function as truck routes and emergency response routes. However, they are not exclusively auto-dominated streets; they may serve as major transit corridors and need to accommodate convenient and safe pedestrian travel.

Secondary Arterials: Secondary arterials carry traffic from one part of the community to another and connect to major arterials. Secondary arterials typically carry lower volumes, principally local traffic, and are used for shorter trips to activity centers, jobs, residences, schools, and other local destinations. Secondary arterials are often used for transit, bicyclists, and pedestrians. Depending on the roadway width, trucks may have limited access to secondary arterials.

- ***Collector*** roadways are streets that provide access and traffic circulation within residential and non-residential (e.g., commercial and industrial) areas. Collector roadways connect local streets to arterials and are typically designed with two through travel lanes (i.e., one through travel lane in each direction) that may accommodate on-street parking. They may also provide access to abutting properties.

  Pursuant to the City of El Monte "Vision El Monte" General Plan June 2011, the following definitions are noted for Collector Roadways:

  Collectors: Collector streets are intermediate routes; they connect residential neighborhoods to each another and neighborhoods to commercial and other districts in El Monte. They collect traffic from local streets in residential neighborhoods and channel it onto arterials. Collector streets may also carry local transit service. Finally, collectors often serve as the primary bicycle routes in the community and also accommodate pedestrian travel. Most collector streets have two lanes.

- ***Local*** roadways distribute traffic within a neighborhood, or similar adjacent neighborhoods, and are not intended for use as a through-street or a link between higher capacity facilities such as collector or arterial roadways. Local streets are fronted by residential uses and do not typically serve commercial uses.

  Pursuant to the City of El Monte "Vision El Monte" General Plan June 2011, the following definitions are noted for Local Roadways:

  Local Streets: Local streets serve local land uses, typically residential neighborhoods, and provide direct access to individual parcels. Local streets typically carry the lowest volume of traffic, which is nearly exclusively local traffic. Local streets, being the primary means for residents to get around their neighborhood, should also accommodate bicycles and local

pedestrian circulation. Speeds on local streets are relatively low, and on-street parking is often permitted. In some cases, however, local streets serve commercial and industrial uses.

5.4 Roadway Descriptions

A review of the important roadways in the project site vicinity and study area is summarized in ***Table 5-2***. As indicated in *Table 5-2*, the important roadways within the project study area were reviewed in terms of the number of lanes provided, posted speed limits, etc. Additionally, the roadway classifications also are presented in *Table 5-2*.

5.5 Transit Services[4]

The City of El Monte is home to significant public transit facilities and services. The El Monte Transit Station (EMTS) is a regional bus hub in downtown with direct access to the El Monte Busway, one of the most successful dedicated bus/high occupancy vehicle (HOV) lanes in the country. Both Metro and Foothill Transit operate many routes that run through El Monte and converge at the EMTS. The following sections provide an overview of the regional rail service and local transit services provided through and within the City of El Monte.

5.5.1 Regional Rail Transit Network Connections

Los Angeles County and surrounding counties are interconnected by a regional network of rail lines, with Union Station in Downtown Los Angeles functioning as the hub of the rail system. Amtrak, Metro, and the Southern California Regional Rail Authority (SCRRA) operate a system of heavy rail, light rail and subway lines that provide interconnections throughout Los Angeles County and connections between the six county Southern California region including Los Angeles County, Orange County, Riverside County, San Bernardino County, San Diego County and Ventura County. An illustration of the regional rail network serving the greater Los Angeles region and Southern California is presented in ***Figure 5-2***.

Metro currently operates four light rail lines and two rapid transit subway lines, altogether totaling roughly 80 miles of rail, 80 stations, and approximately 353,600 daily weekday boardings.[5] Metro is currently adding the Crenshaw Line, which is currently under construction, and extending the Expo Line to Santa Monica and the Gold Line to Azusa. SCRRA operates Metrolink which provides rail service for Los Angeles County, Orange County, Riverside County, San Bernardino County and Ventura County. Metrolink presently operates seven lines of service, 55 stations, and approximately 44,000 daily weekday boardings all over a 512 route-mile network.[6] Near the project site, Metrolink provides a rail stop for the San Bernardino route corridor which extends between Union Station in

[4] Walk Score also calculates a transit score based on the number and proximity of bus and rail routes near the project site. For example, refer to http://www.walkscore.com/, which generates a transit score of approximately 68 (Good Transit) out of 100 for the project site. Walk Score calculates the transit score of an address by locating nearby bus/rail transit routes and stops. Walk Score measures how easy it is to live a car-lite lifestyle—not how pretty the area is for using transit service.

[5] Source: Metro Facts at a Glance (http://www.metro.net/news/facts/); as of August 2014.

[6] Source: SCCRA (http://www.metrolinktrains.com/about/).

Table 5-2
EXISTING ROADWAY DESCRIPTIONS

ROADWAY	CLASSIFICATION [a]	TRAVEL LANES		MEDIAN TYPE [d]	SPEED LIMIT
		Direction [b]	No. Lanes [c]		
San Gabriel Boulevard	Secondary Arterial	NB-SB	4	2WLT	35
Walnut Grove Avenue	Minor Arterial	NB-SB	4	N/A/RMI	40
Rosemead Boulevard (SR-164)	Major Arterial	NB-SB	4	RMI	40
	Major Arterial between I-10 EB Ramps/Garvey Ave	NB-SB	6	RMI	45
Rio Hondo Avenue	Local	NB-SB	2	N/A	25
Temple City Boulevard	Minor Arterial	NB-SB	4	N/A/2WLT	40
Baldwin Avenue	Major Arterial	NB-SB	4	2WLT	35
Chico Avenue	Collector	NB-SB	2	N/A	30
Merced Avenue	Collector	NB-SB	2	N/A	35
Santa Anita Avenue	Major Arterial between Lower Azusa Rd/Valley Blvd	NB-SB	4	RMI	35
	Major Arterial between Valley Blvd/Brockway St	NB-SB	6	RMI/2WLT	35
	Major Arterial between Brockway St/Garvey Ave	NB-SB	4	2WLT	35
Tyler Avenue	Secondary Arterial	NB-SB	2	N/A	25
Peck Road	Major Arterial	NB-SB	4	RMI	35
Durfee Avenue	Collector	NB-SB	4	2WLT	30
Gilman Road	Local	NB-SB	2	N/A	25
Lower Azusa Road	Secondary Arterial	EB-WB	4	2WLT	35
Valley Boulevard	Major Arterial	EB-WB	4	2WLT	35
Loftus Drive	Collector	EB-WB	2	N/A	35
Ramona Boulevard	Secondary Arterial between Santa Anita Ave/Valley Blvd	EB-WB	4	2WLT	35
	Secondary Arterial between Valley Blvd/Peck Rd	EB-WB	4	RMI	35
	Secondary Arterial between Peck Rd/Durfee Rd	EB-WB	4	2WLT	35
Flair Drive	Local	EB-WB	2	N/A	25
Telstar Avenue	Collector	EB-WB	2	N/A	35
Garvey Avenue	Major Arterial	EB-WB	4	2WLT	35
Las Tunas Drive	Major Arterial	EB-WB	6	RMI	30
Rush Street	Secondary Arterial	EB-WB	4	N/A	35
Olive Street	Local	EB-WB	2	N/A	25

Notes:
[a] Classification based on City of El Monte General Plan, June 2011.
[b] NB = Northbound; SB = Southbound; EB = Eastbound; WB =Westbound; NW= Northwest; and SE = Southeast
[c] Number of lanes in both directions on the roadway
[d] RMI = Raised Median Island; 2WLT = 2-Way Left-Turn Lane; N/A = Not Applicable

N

NOT TO SCALE

MAP SOURCE: METROLINK

FIGURE 5-2
REGIONAL RAIL NETWORK

LINSCOTT, LAW & GREENSPAN, engineers

FLAIR SPECTRUM SPECIFIC PLAN

o:\job_file\4074\dwg\f5-2.dwg LDP 15:44:29 09/24/2014 rodriquez

downtown Los Angeles and the City of San Bernardino. This Metrolink stop provides connectivity opportunities for El Monte and the proposed project to the regional network of rail lines operated by Amtrak, Metro and SCRRA.

Metrolink is a regional commuter train system that provides service within Los Angeles, Ventura, Orange, Riverside, and San Bernardino counties. The Metrolink San Bernardino Line provides services between San Bernardino and the Los Angeles Union Station. The El Monte transit station located at 10925 Railroad Street, north of Valley Boulevard and west of Tyler Avenue, within the project study area. The El Monte transit station connects with several bus lines that are operated by the Metro, El Monte Transit, Rosemead Explorer, and Metrolink services. During the weekday AM peak hour, 3 trains per hour are provided at the El Monte station that travel westward to Los Angeles Union Station. During the weekday PM peak hour, 2 trains are provided at the El Monte station that travel eastbound to San Bernardino and 2 trains are provided that travel westward to Los Angeles Union Station.

5.5.2 Public Bus Transit Services

Public bus transit service within the project study area is currently provided by Los Angeles County Metropolitan Transit Authority (Metro), Foothill Transit, and El Monte Transit. A summary of the existing transit service, including the transit route, destinations and peak hour headways is presented in ***Table 5–3***. The existing public transit routes in the project site vicinity are illustrated in ***Figure 5–3***.

Metro operates 10 bus transit routes along major roadways within the traffic analysis study area, including routes on Valley Boulevard, Rosemead Boulevard, Flair Drive, Rio Hondo Avenue, among many others. Metro operates local and limited local transit routes in the immediate vicinity of the project site. Metro bus transit routes provide headways ranging from two buses per hour to as high as 10 buses per hour during the morning and afternoon peak commute hours (i.e., the peak commute hour between 7:00 to 9:00 AM and 4:00 to 6:00 PM, respectively). The 10 Metro bus transit routes in the traffic analysis study area provide services for an average of (i.e., average of the directional number of buses/trains during the peak hours) roughly 69 and 64 buses during the weekday AM and PM peak hours, respectively.

Foothill Transit serves the San Gabriel and Pomona Valleys and it provides bus transit service along major roadways within the traffic analysis study area including Valley Boulevard, Garvey Avenue, Ramona Boulevard, among others. Foothill Transit operates seven transit routes in the immediate vicinity of the project site. Foothill Transit routes provide headways ranging from two buses per hour to as high as seven buses per hour during the morning and afternoon peak commute hours i.e., the peak commuter hour between 7:00 to 9:00 AM and 4:00 to 6:00 PM, respectively). The seven Foothill Transit routes in the traffic analysis study area provide services for an average of (i.e., average of the directional number of buses/trains during the peak hours) roughly 35 and 33 buses during the weekday AM and PM peak hours, respectively.

Table 5-3
EXISTING TRANSIT ROUTES [1]

ROUTE	DESTINATIONS	ROADWAY(S) NEAR SITE	NO. OF BUSES/TRAINS DURING PEAK HOUR		
			DIR	AM	PM
Metro 70	Los Angeles to El Monte via Boyle Heights, Monterey Park	Walnut Grove Avenue, Garvey Avenue, Chico Avenue, Merced Avenue, Santa Anita Avenue	EB WB	5 6	6 4
Metro 76	Downtown Los Angeles to El Monte via Lincoln Heights, Alhambra, Rosemead	San Gabriel Boulevard, Valley Boulevard, Walnut Grove Avenue, Rosemead Boulevard, Temple City Boulevard, Baldwin Avenue, Ramona Boulevard, Santa Anita Avenue, Tyler Avenue	EB WB	3 4	5 4
Metro 78/79/378	Downtown Los Angeles to Arcadia via El Sereno, Alhambra, South Arcadia, Arcadia	Las Tunas Drive, Rosemead Boulevard	EB WB	3 7	7 4
Metro 176	Highland Park to Montebello via South Pasadena, San Gabriel, Rosemead, El Monte, South El Monte	Valley Boulevard, Walnut Grove Avenue, Rosemead Boulevard, Garvey Avenue, Telstar Avenue, Flair Drive, Aerojet Avenue, Rio Hondo Avenue, Fletcher Avenue, Baldwin Avenue, Ramona Boulevard, Santa Anita Avenue, Tyler Avenue, Rush Street	EB WB	2 2	1 2
Metro 190/194	Cal Ploy Pomona to El Monte via Mt. Sac College, West Covina, Covina, Baldwin Park, Walnut, La Puente	Valley Boulevard, Garvey Avenue, Santa Anita Avenue, Ramona Boulevard, Tyler Avenue, Peck Road, Gilman Road	EB WB	6 10	8 6
Metro 266	Lakewood to Pasadena via Bellflower, Downey, Pico Rivera, South El Monte, Temple City	Valley Boulevard, Rosemead Boulevard, Garvey Avenue, Whitmore Street, Rush Street, Lower Azusa Road, Las Tunas Drive	NB SB	2 2	2 2
Metro 267/264	El Monte to Pasadena via Arcadia	Valley Boulevard, Temple City Boulevard, Lower Azusa Road, Baldwin Avenue, Ramona Boulevard	NB SB	2 2	2 2
Metro 268	Altadena to El Monte via La Canada Flintridge, Altadena, Sierra Madre, Arcadia	Valley Boulevard, Lower Azusa Road, Santa Anita Avenue, Ramona Boulevard, Tyler Avenue, Baldwin Avenue, Olive Street	NB SB	2 2	2 2

[1] Sources: Los Angeles County Metropolitan Transportation Authority (Metro), Foothill Transit (F.T.), City of El Monte (EM), City of Rosemead and Metrolink websites, 2014.

Table 5-3 (Continued)
EXISTING TRANSIT ROUTES [1]

ROUTE	DESTINATIONS	ROADWAY(S) NEAR SITE	NO. OF BUSES/TRAINS DURING PEAK HOUR		
			DIR	AM	PM
Metro 270	Norwalk to Monrovia via Santa Fe Springs, Whittier, Rio Hondo College, El Monte	Valley Boulevard, Santa Anita Avenue, Ramona Boulevard, Tyler Avenue, Peck Road, Lower Azusa Road	NB SB	2 4	2 1
Metro 487/489	El Monte to Los Angeles via Arcadia, Pasadena, San Marino, Temple City, San Gabriel	San Gabriel Boulevard, Valley Boulevard, Walnut Grove Avenue, Rosemead Boulevard, Lower Azusa Road, Santa Anita Avenue, Ramona Boulevard, Las Tunas Drive	EB WB	2 2	2 2
Metro 770	Los Angeles to El Monte via East Los Angeles, Monterey Park, South El Monte	Walnut Grove Avenue, Rosemead Boulevard, Santa Anita Avenue, Garvey Avenue	EB WB	4 5	5 4
F.T. 178	Puente Hills Mall to El Monte	Valley Boulevard, Garvey Avenue, Lower Azusa Road, Ramona Boulevard, Tyler Avenue, Peck Road, Durfee Avenue	EB WB	2 2	2 2
F.T. 269	El Monte Station to Montebello Town Center	Garvey Avenue, Santa Anita Avenue	NB SB	2 2	2 2
F.T. 282	El Monte to Puente Hills Mall	Valley Boulevard, Ramona Boulevard, Tyler Avenue, Peck Road	EB WB	2 2	2 2
F.T. 486	Pomona to La Puente to El Monte via Amar Road	Valley Boulevard, Garvey Avenue, Santa Anita Avenue, Tyler Avenue, Peck Road	EB WB	7 5	5 5
F.T. 488	Glendora to El Monte via West Covina	Valley Boulevard, Ramona Boulevard, Tyler Avenue, Peck Road, Gilman Road	EB WB	2 3	2 3
F.T. 492	Montclair to Arcadia to El Monte via Arrow Hwy	Lower Azusa Road, Santa Anita Avenue	EB WB	2 2	2 2
F.T. 494	San Dimas to El Monte via Glendora	Valley Boulevard, Lower Azusa Road, Ramona Boulevard, Tyler Avenue, Peck Road	EB WB	0 2	2 0

[1] Sources: Los Angeles County Metropolitan Transportation Authority (Metro), Foothill Transit (F.T.), City of El Monte (EM), City of Rosemead and Metrolink websites, 2014.

Table 5-3 (Continued)
EXISTING TRANSIT ROUTES [1]

ROUTE	DESTINATIONS	ROADWAY(S) NEAR SITE	NO. OF BUSES/TRAINS DURING PEAK HOUR		
			DIR	AM	PM
EM Blue Route	El Monte Trolley Station circular	Santa Anita Avenue, Tyler Avenue, Peck Road, Lower Azusa Road, Valley Boulevard, Ramona Boulevard, Durfee Avenue	EB WB	0 2	0 2
EM Green Route	El Monte Trolley Station circular	Valley Boulevard, Ramona Boulevard, Peck Road, Garvey Avenue, Merced Avenue, Tyler Avenue, Santa Anita Avenue	EB WB	0 2	0 2
EM Orange Route	El Monte Trolley Station circular	Valley Boulevard, Peck Road, Ramona Boulevard, Garvey Avenue, Tyler Avenue	EB WB	0 2	0 2
EM Red Route	El Monte Trolley Station circular	Valley Boulevard, Tyler Avenue, Santa Anita Avenue, Lower Azusa Road, Peck Road, Ramona Boulevard	EB WB	0 2	0 2
EM Yellow Route	El Monte Trolley Station circular	Valley Boulevard, Tyler Avenue, Peck Road, Ramona Boulevard	EB WB	2 0	2 0
EM Flair Business Park Shuttle	El Monte Metro Station (Mid-day Service Only), Metrolink Station, Flair Business Park	Santa Anita Avenue, Ramona Boulevard, Valley Boulevard, Baldwin Avenue, Flair Drive, Telstar Avenue, Fletcher Avenue, Rio Hondo Avenue, Aerojet Avenue	EB WB	0 3	0 1
Rosemead Explorer	Rosemead via Garvey Community Center, Montebello Town Center, City Hall	Walnut Grove Avenue, Temple City Boulevard, Valley Boulevard, Garvey Avenue	EB WB	1 1	1 1
Metrolink San Bernardino Line	San Bernardino to Los Angeles via Rialto, Fontana, Rancho Cucamonga, Upland, Montclair, Claremont, Pomona, Covina, Baldwin Park, El Monte, Cal State L.A.	El Monte Station	EB WB	1 2	3 2
			Total	132	126

[1] Sources: Los Angeles County Metropolitan Transportation Authority (Metro), Foothill Transit (F.T.), City of El Monte (EM), City of Rosemead and Metrolink websites, 2014.

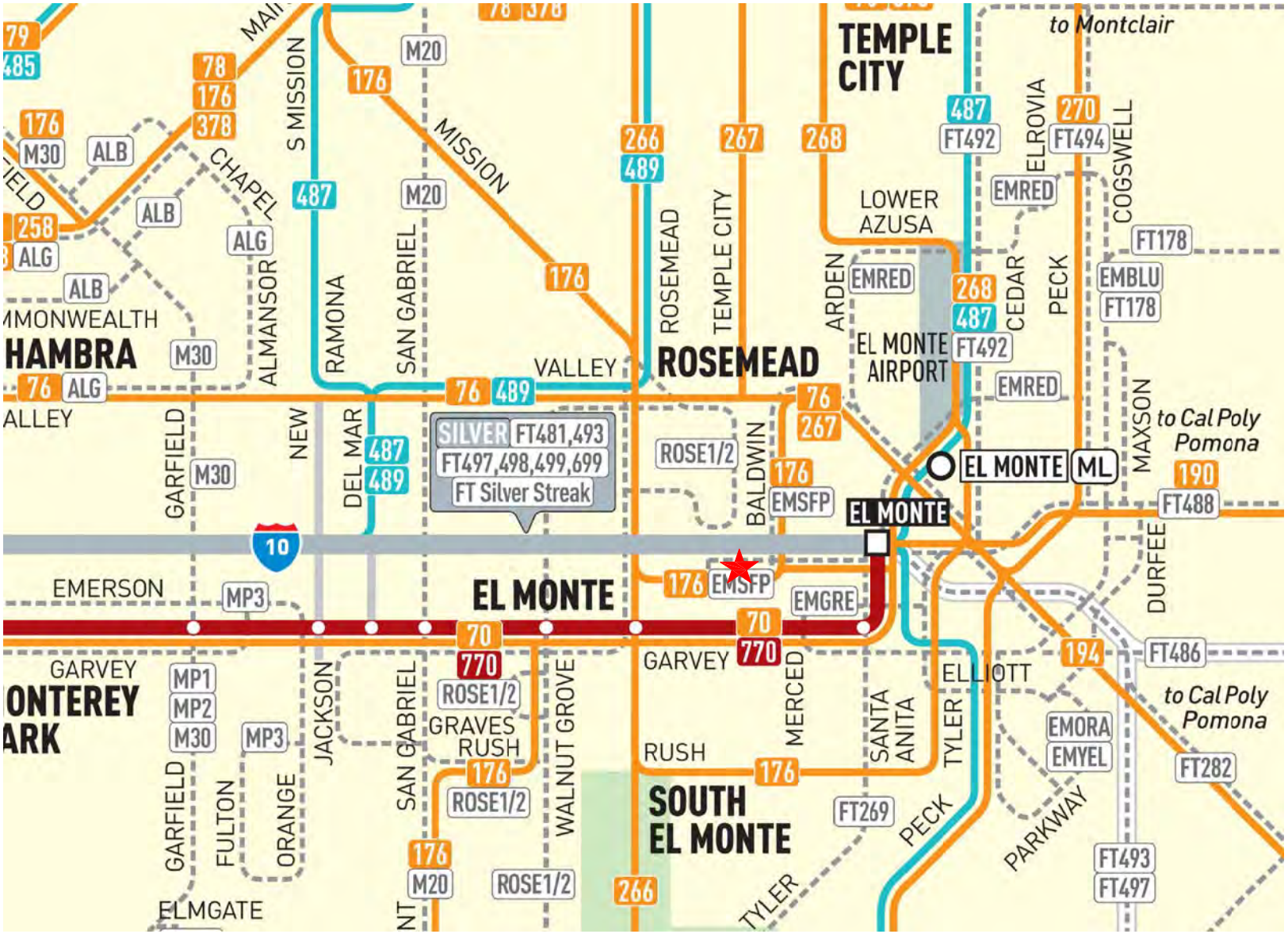

MAP SOURCE: METROPOLITAN TRANSPORTATION AUTHORITY (METRO) WEBSITE

PROJECT SITE

NOT TO SCALE

FIGURE 5-3
EXISTING BUS TRANSIT ROUTES

LINSCOTT, LAW & GREENSPAN, engineers

FLAIR SPECTRUM SPECIFIC PLAN

o:\job_file\4074\dwg\f5-3.dwg LDP 15:37:37 10/15/2014 rodriquez

With the addition of bus transit routes operated by El Monte Transit and Rosemead Explorer, there is a total of 16 routes within the traffic analysis study area provided on most major corridors. Headways range from two buses per hour to as high as 10 buses per hour during the morning and afternoon peak commute hours i.e., the peak commuter hour between 7:00 to 9:00 AM and 4:00 to 6:00 PM, respectively). The 16 bus transit routes in the traffic analysis study area provide services for an average of (i.e., average of the directional number of buses/trains during the peak hours) roughly 119 and 110 buses during the weekday AM and PM peak hours, respectively.

5.5.3 El Monte Transit and Commuter Shuttle[7]

The City of El Monte operates its own in-town transit system including routes that provide service along the project site and Flair Park. El Monte Transit operates ultra-low floor transit buses on five fixed-routes that provide transportation to residents to most major shopping areas, recreation facilities and most schools within the City. Hours of operation are Monday through Friday from 6:00 AM to 7:00 PM and Saturdays from 9:40 AM to 7:00 PM. All buses leave from the El Monte Bus Station located at 3650 Center Avenue approximately every 40 minutes.

El Monte commuter shuttles (i.e., referred to as the Flair Business Park Shuttle) operate Monday through Friday during peak morning commute periods and at mid-day, providing connections between the El Monte Transit (Metrolink) Station and the Flair Park Business District, the Civic Center and the El Monte Bus Station. The same shuttles will return riders to the El Monte Transit (Metrolink) Station during the afternoon and evening commute periods. These shuttles are Metrolink "free transfers" eligible with a valid Metrolink ticket or pass. Non-Metrolink riders must only pay 50 cents per ride. The nearest bus stops to the project site are located at the Rio Hondo Avenue/Telstar Avenue and Fletcher Avenue/Flair Drive intersections. It should be noted that although a near-side eastbound bus stop is shown on the El Monte Flair Business Park shuttle schedule at the Rio Hondo Avenue/Flair Drive intersection, based on recent field observations no formal bus stop, shelter or signage is provided at this location.

5.6 Designated Transit Corridors

In the immediate project vicinity, both Telstar Avenue and Rosemead Boulevard are designated transit streets in the City of El Monte "Vision El Monte" General Plan 2011. Rosemead Boulevard is designated as a Primary Transit Street and Telstar Avenue is designated as a Secondary Transit Street. Pursuant to the City of El Monte General Plan, the following definition is noted for "Transit Corridors":

Transit corridors refer to streets that are designated for transit (bus) use. Primary transit corridors are expected to carry the highest levels of transit service, particularly regional bus service, with the highest number of bus routes and the highest frequency of service. As an alternative, a secondary transit street is expected to carry lower but still significant levels of transit service, probably with a greater orientation to local rather than regional bus routes.

[7] Source: http://www.ci.el-monte.ca.us/Government/PublicWorks/Transportation.aspx

5.7 Designated Truck Routes

In the general project vicinity, Rosemead Boulevard, Temple City Boulevard, Valley Boulevard, Baldwin Avenue and Ramona Boulevard all are designated Truck routes in the City of El Monte "Vision El Monte" General Plan 2011. Pursuant to the City of El Monte General Plan, the following definition is noted for Truck Routes:

Truck routes are the primary routes for truck traffic. Truck routes are focused onto Principal travel corridors that support commercial and industrial activities. Controlling and limiting trucks help prevent them from intruding into neighborhoods and traveling on streets not designed to accommodate them, reduce diesel and particulate emissions near sensitive land uses, control noise and vibration, and improve quality of life in the community.

6.0 TRAFFIC COUNTS

Manual counts of vehicular turning movements were conducted at each of the 46 study intersections during the weekday morning (AM) and afternoon (PM) commute periods as well as Saturday mid-day peak hour to determine the peak hour traffic volumes. The manual counts were conducted by independent traffic count subconsultants at the study intersections from 7:00 to 9:00 AM to determine the weekday AM peak commute hour, from 4:00 to 6:00 PM to determine the weekday PM peak commute hour, and 12:00 to 2:00 PM to determine the Saturday mid-day peak hour. It is noted that all of the traffic counts were conducted when local schools were in session. Traffic volumes at the study intersections show the morning and afternoon peak periods typically associated with peak commute hours in the metropolitan area.

It should be noted that due to the Alameda Corridor East Construction Authority Grade Separation Project construction, Baldwin Avenue is currently closed between Gidley Avenue and Rose Avenue in the City of El Monte. Traffic count data for the Baldwin Avenue at Lower Azusa Road and Valley Boulevard intersections as well as nearby intersections that were conducted prior to the Baldwin Avenue closure were obtained from City of El Monte staff. Based on a review of the historical traffic count data and the current traffic data, it was determined that traffic patterns in the immediate vicinity have slightly shifted due to the closure of Baldwin Avenue. As such, historical traffic count data for the following intersections were utilized for the traffic analysis:

- Int. No. 19: Temple City /Valley Boulevard
- Int. No. 22: Baldwin Avenue/Valley Boulevard
- Int. No. 24: Baldwin Avenue-I-10 Freeway Eastbound Ramps/Flair Drive
- Int. No. 45: Baldwin Avenue/Lower Azusa Road

The traffic count data for the four study intersections were increased at a rate of 1.0 percent (1.0%) per year to reflect year 2014 conditions.

The weekday AM and PM peak hours and Saturday mid-day peak hour manual counts of vehicle movements at the study intersections are summarized in ***Table 6-1***. The existing traffic volumes at the study intersections during the weekday AM and PM peak hours and Saturday mid-day peak hour are shown in ***Figures 6-1, 6-2*** and **6-*3***, respectively. Summary data worksheets of the manual traffic counts at the study intersections are contained in ***Appendix A***.

Table 6-1
EXISTING TRAFFIC VOLUMES [1]

NO.	INTERSECTION	DATE	DIR	AM PEAK HOUR BEGAN	AM PEAK HOUR VOLUME	PM PEAK HOUR BEGAN	PM PEAK HOUR VOLUME	DATE	SAT MID-DAY BEGAN	SAT MID-DAY VOLUME
1	San Gabriel Boulevard/ Valley Boulevard	06/04/2014	NB	8:00	818	5:00	1,061	06/07/2014	12:15	1,091
			SB		1,006		1,016			1,014
			EB		543		1,282			1,139
			WB		1,125		879			1,028
2	Walnut Grove Avenue/ Valley Boulevard	06/04/2014	NB	7:30	660	5:00	999	06/07/2014	12:00	733
			SB		918		700			640
			EB		632		1,158			1,107
			WB		1,247		914			1,084
3	Walnut Grove Avenue/ Garvey Avenue	04/29/2014	NB	7:45	531	5:00	1,078	06/07/2014	12:00	607
			SB		984		782			767
			EB		978		1,018			963
			WB		966		1,255			1,027
4	Rosemead Boulevard/ Valley Boulevard	06/04/2014	NB	7:30	1,458	4:45	1,548	06/07/2014	1:00	1,604
			SB		1,596		1,478			1,488
			EB		641		1,042			961
			WB		885		711			821
5	Rosemead Boulevard (SR-164)/ Glendon Way - I-10 Fwy WB Ramps	06/05/2014	NB	7:45	1,978	5:00	2,891	06/07/2014	12:30	2,295
			SB		1,856		1,617			1,845
			EB		202		136			149
			WB		329		467			509
6	Rosemead Boulevard (SR-164)/ I-10 EB Ramps	06/05/2014	NB	7:30	1,791	4:45	2,597	06/07/2014	12:45	2,019
			SB		2,335		1,622			1,839
			EB		610		535			373
			WB		402		543			485
7	Rosemead Boulevard (SR-164)/ Telstar Avenue	06/04/2014	NB	7:45	2,179	4:45	1,920	06/07/2014	12:30	1,919
			SB		2,615		1,896			1,884
			EB		0		0			0
			WB		341		1,221			344
8	Rosemead Boulevard (SR-164)/ Whitmore Street	06/05/2014	NB	7:45	2,189	4:15	1,867	06/07/2014	12:15	1,966
			SB		2,128		2,168			1,923
			EB		0		0			0
			WB		49		322			39
9	Rosemead Boulevard (SR-164)/ Garvey Avenue	06/05/2014	NB	7:45	1,790	4:30	1,698	06/07/2014	1:00	1,568
			SB		2,130		2,412			1,831
			EB		695		904			1,030
			WB		1,190		1,006			1,103
10	I-10 Fwy EB Ramps - Aerojet Avenue/ Flair Drive	06/04/2014	NB	7:45	226	4:30	406	06/07/2014	12:00	72
			SB		880		138			79
			EB		33		171			33
			WB		158		238			76
11	Aerojet Avenue/ Telstar Avenue	06/04/2014	NB	7:45	14	4:30	1	06/07/2014	12:15	0
			SB		185		481			106
			EB		786		287			190
			WB		214		601			163
12	Rio Hondo Avenue/ Flair Drive	06/04/2014	NB	8:00	37	4:45	70	06/07/2014	1:00	3
			SB		0		0			0
			EB		301		190			25
			WB		290		125			40
13	Rio Hondo Avenue/ Telstar Avenue	06/04/2014	NB	8:00	0	4:45	27	06/07/2014	1:00	0
			SB		57		92			11
			EB		337		217			89
			WB		195		295			60
14	Fletcher Avenue/ Flair Drive	06/05/2014	NB	8:00	43	4:45	45	06/07/2014	12:30	5
			SB		0		0			0
			EB		212		157			33
			WB		342		172			61
15	Fletcher Avenue/ Telstar Avenue	06/05/2014	NB	7:45	11	4:15	22	06/07/2014	12:15	0
			SB		58		63			12
			EB		161		230			47
			WB		280		156			42

[1] Counts conducted by City Traffic Counters, Counts Unlimited, Inc., and The Traffic Solution.

Table 6-1 (Continued)
EXISTING TRAFFIC VOLUMES [1]

NO.	INTERSECTION	DATE	DIR	AM PEAK HOUR BEGAN	AM PEAK HOUR VOLUME	PM PEAK HOUR BEGAN	PM PEAK HOUR VOLUME	DATE	SAT MID-DAY BEGAN	SAT MID-DAY VOLUME
16	Telstar Avenue/ Flair Drive	06/05/2014	NB	7:45	66	4:15	243	06/07/2014	12:00	47
			SB		0		0			0
			EB		97		248			65
			WB		620		186			105
17	Chico Avenue/ Garvey Avenue	06/05/2014	NB	7:45	198	5:00	280	06/07/2014	1:00	264
			SB		3		8			3
			EB		749		1,115			1,255
			WB		1,165		981			1,074
18	Temple City Boulevard/ Lower Azusa Road	06/04/2014	NB	7:30	718	5:00	1,115	06/07/2014	12:00	740
			SB		1,001		863			730
			EB		577		792			587
			WB		1,040		802			896
19	Temple City Boulevard/ Valley Boulevard	09/12/2012 [2]	NB	7:30	711	5:00	850	09/15/2012	12:45	508
			SB		1,020		696			713
			EB		768		1,270			996
			WB		1,370		745			722
20	Temple City Boulevard/ Loftus Drive	06/04/2014	NB	7:00	880	5:00	984	06/07/2014	12:00	761
			SB		793		947			815
			EB		0		0			0
			WB		191		380			264
21	Temple City Boulevard/ I-10 WB Ramps	06/04/2014	NB	7:15	917	5:00	985	06/07/2014	1:00	783
			SB		689		965			816
			EB		28		17			19
			WB		0		0			0
22	Baldwin Avenue/ Valley Boulevard	09/13/2012 [2]	NB	7:00	703	5:00	1,128	09/15/2012	12:00	887
			SB		881		753			847
			EB		621		1,145			809
			WB		1,305		833			818
23	Baldwin Avenue/ Loftus Drive	06/04/2014	NB	7:45	686	5:00	1,180	06/07/2014	12:00	929
			SB		1,105		715			732
			EB		519		504			359
			WB		332		214			137
24	Baldwin Avenue/ Flair Drive - I-10 EB Ramps	09/12/2012 [2]	NB	8:00	706	4:30	965	09/15/2012	12:00	884
			SB		1,568		616			722
			EB		112		610			199
			WB		0		0			0
25	Merced Avenue/ Garvey Avenue	06/05/2014	NB	7:30	274	5:00	471	06/07/2014	12:15	336
			SB		441		239			234
			EB		704		1,151			1,180
			WB		1,176		788			904
26	Santa Anita Avenue/ Lower Azusa Road	06/05/2014	NB	7:30	1,180	5:00	1,282	06/14/2014	12:15	1,108
			SB		1,150		1,331			1,100
			EB		677		789			817
			WB		887		963			1,076
27	Santa Anita Avenue/ Valley Boulevard	06/04/2014	NB	7:30	1,009	5:00	1,434	06/14/2014	1:00	1,110
			SB		1,409		876			910
			EB		597		1,109			655
			WB		1,014		701			665
28	Santa Anita Avenue/ Ramona Boulevard	06/04/2014	NB	7:30	1,331	5:00	1,534	06/14/2014	1:00	1,314
			SB		1,287		1,010			1,070
			EB		154		460			95
			WB		395		259			245
29	Santa Anita Avenue/ Garvey Avenue	06/05/2014	NB	7:30	751	5:00	862	06/14/2014	1:00	467
			SB		1,166		1,163			897
			EB		774		1,218			1,154
			WB		1,110		769			964
30	Tyler Avenue/ Valley Boulevard	06/05/2014	NB	7:30	289	4:30	471	06/14/2014	1:00	302
			SB		635		420			333
			EB		503		961			671
			WB		1,007		710			674

[1] Counts conducted by City Traffic Counters, Counts Unlimited, Inc., and The Traffic Solution.
[2] Counts conducted in 2012 have been utilized to reflect normal traffic patterns, which have been disrupted due to current Alameda Corridor East Construction Authority Grade Separation Project construction. Year 2012 traffic volumes have been increased by 1% per year to reflect year 2014 traffic conditions.

Table 6-1 (Continued)
EXISTING TRAFFIC VOLUMES [1]

NO.	INTERSECTION	DATE	DIR	AM PEAK HOUR BEGAN	AM PEAK HOUR VOLUME	PM PEAK HOUR BEGAN	PM PEAK HOUR VOLUME	DATE	SAT MID-DAY BEGAN	SAT MID-DAY VOLUME
31	Tyler Avenue/	06/05/2014	NB	7:30	270	5:00	370	06/14/2014	1:00	401
	Ramona Boulevard		SB		446		364			331
			EB		489		402			280
			WB		0		0			379
32	Tyler Avenue/	06/05/2014	NB	7:45	283	4:30	802	06/14/2014	12:15	451
	Garvey Avenue		SB		538		1,200			319
			EB		1,056		799			1,006
			WB		0		0			1,046
33	Valley Boulevard/	07/08/2014	NB	7:45	482	4:45	941	07/12/2014	12:00	761
	Ramona Boulevard		SB		172		513			788
			EB		658		420			273
			WB		208		800			470
			SEB		1,227		1,257			900
34	Peck Road/	06/05/2014	NB	7:15	1,028	5:00	904	06/14/2014	12:15	975
	Lower Azusa Road		SB		653		1,146			762
			EB		946		791			936
			WB		0		0			793
35	Peck Road/	06/04/2014	NB	7:30	1,328	4:45	1,270	06/14/2014	12:00	1,139
	Ramona Boulevard		SB		351		935			1,106
			EB		967		714			550
			WB		0		0			667
36	Peck Road/	06/05/2014	NB	7:30	1,607	5:00	1,534	06/14/2014	12:00	1,334
	Valley Boulevard		SB		475		1,252			1,266
			EB		700		673			844
			WB		0		0			836
37	Peck Road/	06/05/2014	NB	7:30	1,134	4:45	1,018	06/14/2014	12:15	662
	Garvey Avenue		SB		626		1,352			875
			EB		736		614			961
			WB		0		0			659
38	Valley Boulevard/	06/05/2014	NB	7:15	557	4:30	969	06/14/2014	12:15	535
	Garvey Avenue		SB		504		965			739
			EB		667		488			812
			WB		0		0			774
39	Durfee Avenue/	06/05/2014	NB	7:00	170	5:00	158	06/14/2014	12:15	49
	Lower Azusa Road		SB		602		1,249			173
			EB		1,043		934			770
			WB		0		0			775
40	Durfee Avenue/	06/05/2014	NB	7:15	0	4:45	0	06/14/2014	12:00	162
	Ramona Boulevard		SB		725		928			0
			EB		1,341		772			836
			WB		0		0			648
41	Rosemead Boulevard (SR-164)/	09/09/2014	NB	7:45	1,157	5:00	1,182	09/06/2014	12:00	1,346
	Las Tunas Drive		SB		1,233		1,653			1,202
			EB		687		1,225			1,097
			WB		1,394		977			958
42	Rosemead Boulevard (SR-164)/	09/09/2014	NB	8:00	1,292	4:15	1,498	09/06/2014	12:00	1,597
	Lower Azusa Road		SB		1,172		1,574			1,326
			EB		0		21			2
			WB		1,020		661			586
43	Rosemead Boulevard (SR-164)/	09/09/2014	NB	7:30	2,021	4:30	1,562	09/06/2014	12:00	1,508
	Rush Street		SB		1,839		2,200			1,378
			EB		165		320			273
			WB		641		829			491
44	Baldwin Avenue/	09/16/2014	NB	7:45	498	5:00	711	09/13/2014	12:15	667
	Olive Street		SB		635		770			792
			EB		146		172			167
			WB		176		125			137
45	Baldwin Avenue/	09/13/2012	NB	7:45	721	5:00	1,206	09/15/2012	12:00	942
	Lower Azusa Road	[2]	SB		1,117		810			911
			EB		706		1,014			888
			WB		1,375		901			873

[1] Counts conducted by City Traffic Counters, Counts Unlimited, Inc., and The Traffic Solution.
[2] Counts conducted in 2012 have been utilized to reflect normal traffic patterns, which have been disrupted due to current Alameda Corridor East Construction Authority Grade Separation Project construction. Year 2012 traffic volumes have been increased by 1% per year to reflect year 2014 traffic conditions.

Table 6-1 (Continued)
EXISTING TRAFFIC VOLUMES [1]

NO.	INTERSECTION	DATE	DIR	AM PEAK HOUR		PM PEAK HOUR			SAT MID-DAY	
				BEGAN	VOLUME	BEGAN	VOLUME	DATE	BEGAN	VOLUME
46	Gilman Road/	09/09/2014	NB	7:15	190	4:30	230	09/06/2014	12:45	95
	Ramona Boulevard		SB		0		0			0
			EB		849		1,013			1,198
			WB		1,199		710			798

[1] Counts conducted by City Traffic Counters, Counts Unlimited, Inc., and The Traffic Solution.
[2] Counts conducted in 2012 have been utilized to reflect normal traffic patterns, which have been disrupted due to current Alameda Corridor East Construction Authority Grade Separation Project construction. Year 2012 traffic volumes have been increased by 1% per year to reflect year 2014 traffic conditions.

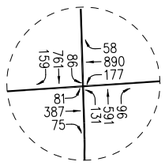

No. 1
San Gabriel Blvd/
Valley Blvd

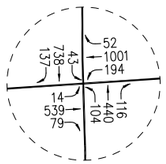

No. 2
Walnut Grove Ave/
Valley Blvd

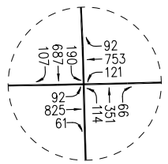

No. 3
Walnut Grove Ave/
Garvey Ave

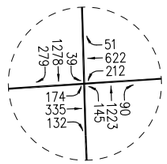

No. 4
Rosemead Blvd (SR-164)/
Valley Blvd

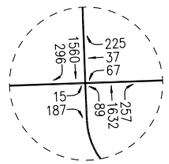

No. 5
Rosemead Blvd (SR-164)/
Glendon Way-I-10 WB
Ramps

No. 6
Rosemead Blvd (SR-164)/
I-10 EB Ramps

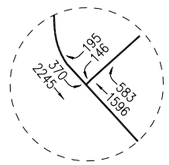

No. 7
Rosemead Blvd (SR-164)/
Telstar Ave

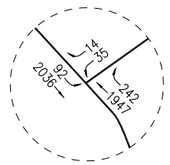

No. 8
Rosemead Blvd (SR-164)/
Whitmore St

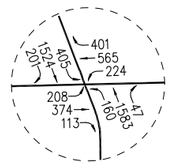

No. 9
Rosemead Blvd (SR-164)/
Garvey Ave

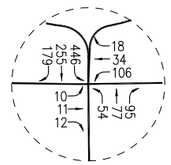

No. 10
Aerojet Ave/
Flair Dr- I-10 EB Ramps

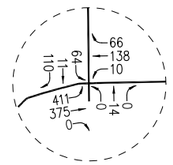

No. 11
Aerojet Ave/
Telstar Ave

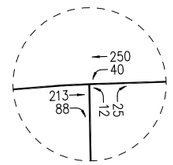

No. 12
Rio Hondo Ave/
Flair Dr

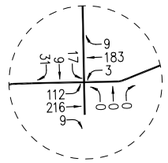

No. 13
Rio Hondo Ave/
Telstar Ave

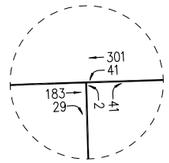

No. 14
Fletcher Ave/
Flair Dr

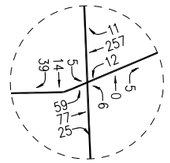

No. 15
Fletcher Ave/
Telstar Ave

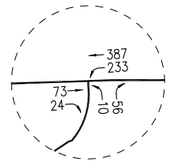

No. 16
Telstar Ave/
Flair Dr

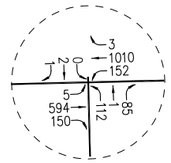

No. 17
Chico Ave/
Garvey Ave

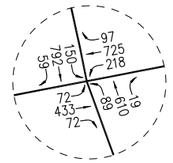

No. 18
Temple City Blvd/
Lower Azusa Rd

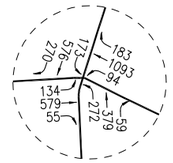

No. 19
Temple City Blvd/
Valley Blvd

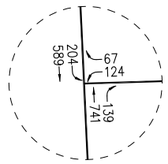

No. 20
Temple City Blvd/
Loftus Dr

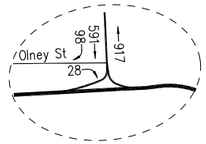

No. 21
Temple City Blvd/
I-10 WB Ramps

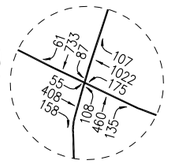

No. 22
Baldwin Ave/
Valley Blvd

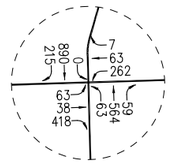

No. 23
Baldwin Ave/
Loftus Dr

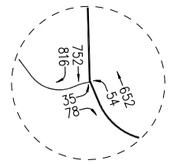

No. 24
Baldwin Ave/
Flair Dr- I-10 EB Ramps

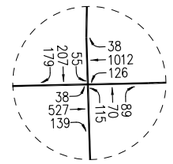

No. 25
Merced Ave/
Garvey Ave

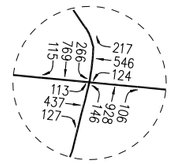

No. 26
Santa Anita Ave/
Lower Azusa Rd

No. 27
Santa Anita Ave/
Valley Blvd

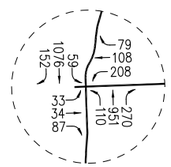

No. 28
Santa Anita Ave/
Ramona Blvd

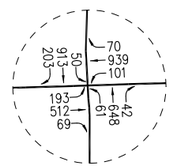

No. 29
Santa Anita Ave/
Garvey Ave

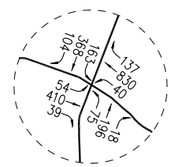

No. 30
Tyler Ave/
Valley Blvd

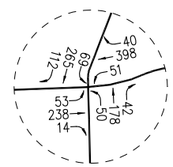

No. 31
Tyler Ave/
Ramona Blvd

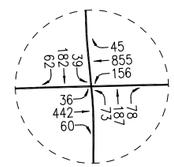

No. 32
Tyler Ave/
Garvey Ave

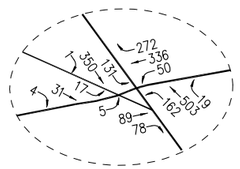

No. 33
Valley Blvd-Valley Mall/
Ramona Blvd

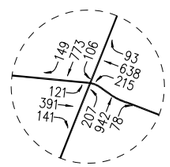

No. 34
Peck Rd/
Lower Azusa Rd

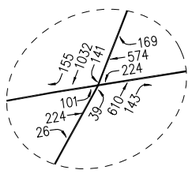

No. 35
Peck Rd/
Ramona Blvd

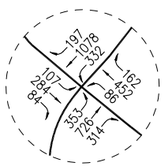

No. 36
Peck Rd/
Valley Blvd

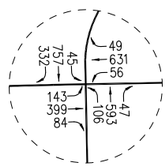

No. 37
Peck Rd/
Garvey Ave

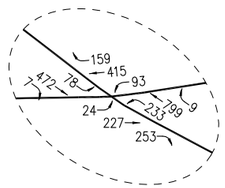

No. 38
Valley Blvd/
Garvey Ave

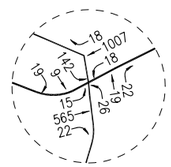

No. 39
Roseglen St-Durfee Ave/
Lower Azusa Rd

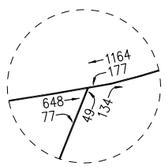

No. 40
Durfee Ave/
Ramona Blvd

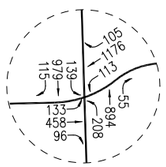

No. 41
Rosemead Blvd (SR-164)/
Las Tunas Dr

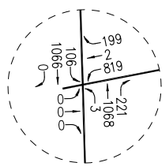

No. 42
Rosemead Blvd (SR-164)/
Lower Azusa Rd

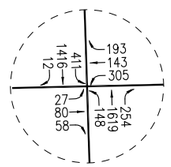

No. 43
Rosemead Blvd (SR-164)/
Rush St

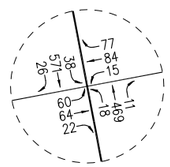

No. 44
Baldwin Ave/
Olive St

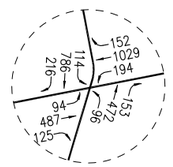

No. 45
Baldwin Ave/
Lower Azusa Rd

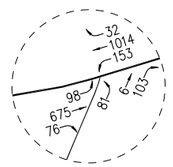

No. 46
Gilman Rd/
Ramona Blvd

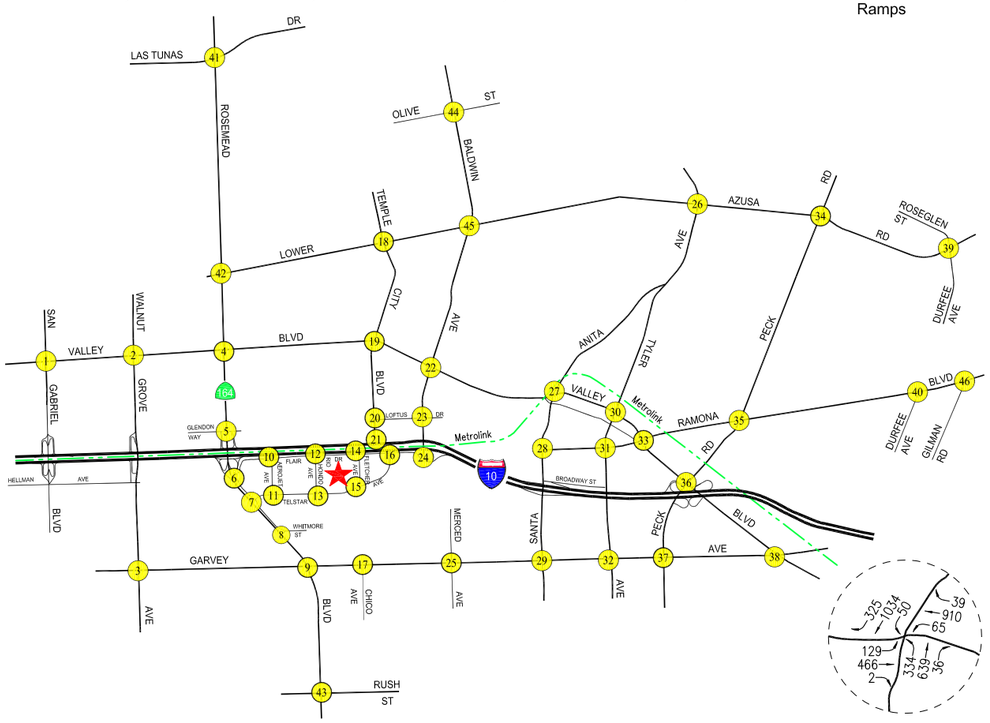

NOT TO SCALE

LINSCOTT, LAW & GREENSPAN, engineers

FIGURE 6-1
EXISTING TRAFFIC VOLUMES
WEEKDAY AM PEAK HOUR
FLAIR SPECTRUM SPECIFIC PLAN

o:\job_file\4074\dwg\f6-1.dwg LDP 10:34:45 09/24/2014 rodriquez

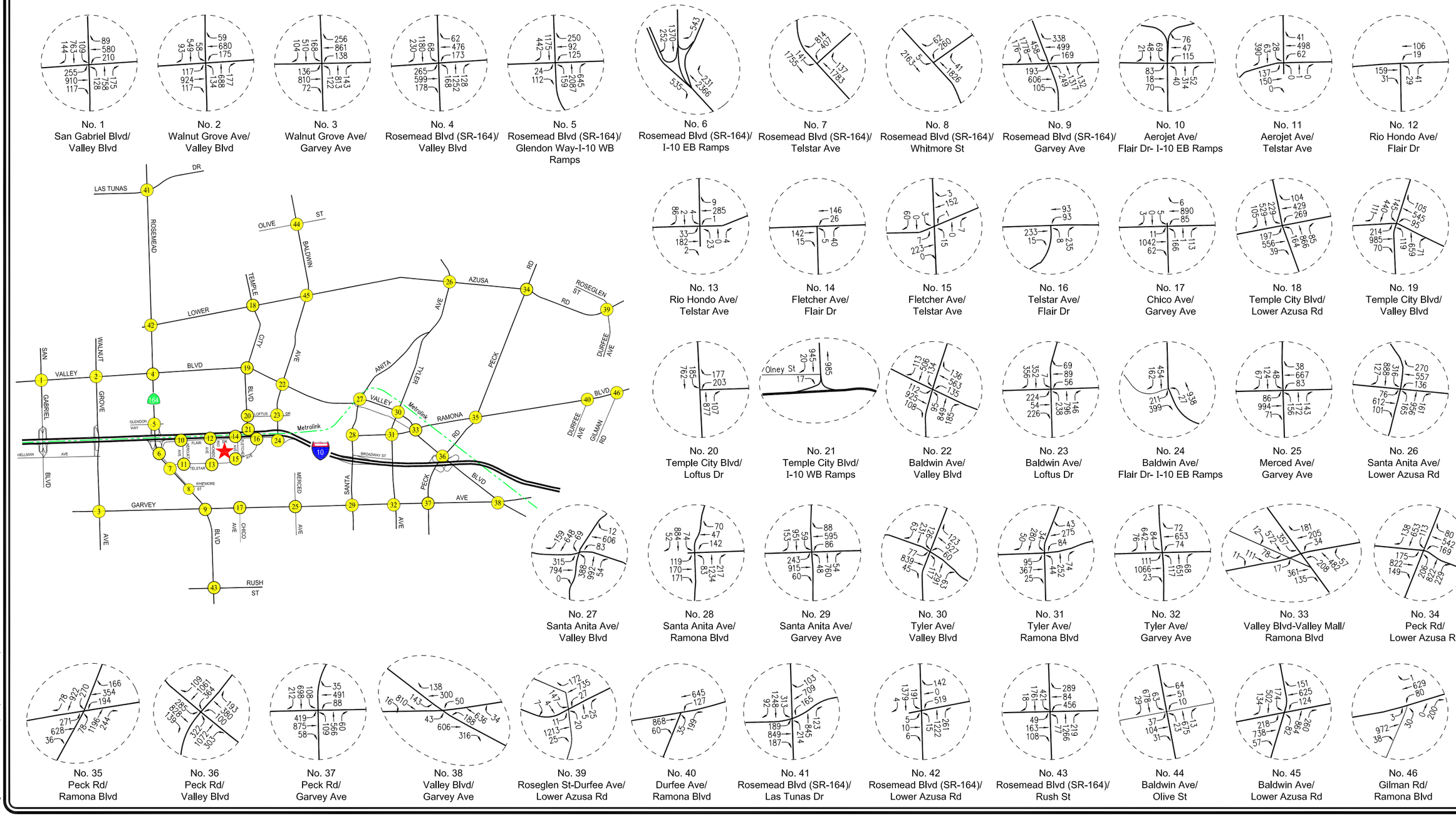

NOT TO SCALE

LINSCOTT, LAW & GREENSPAN, engineers

FIGURE 6-2
EXISTING TRAFFIC VOLUMES
WEEKDAY PM PEAK HOUR
FLAIR SPECTRUM SPECIFIC PLAN

o:\job_file\4074\dwg\f6-2.dwg LDP 10:37:27 09/24/2014 rodriquez

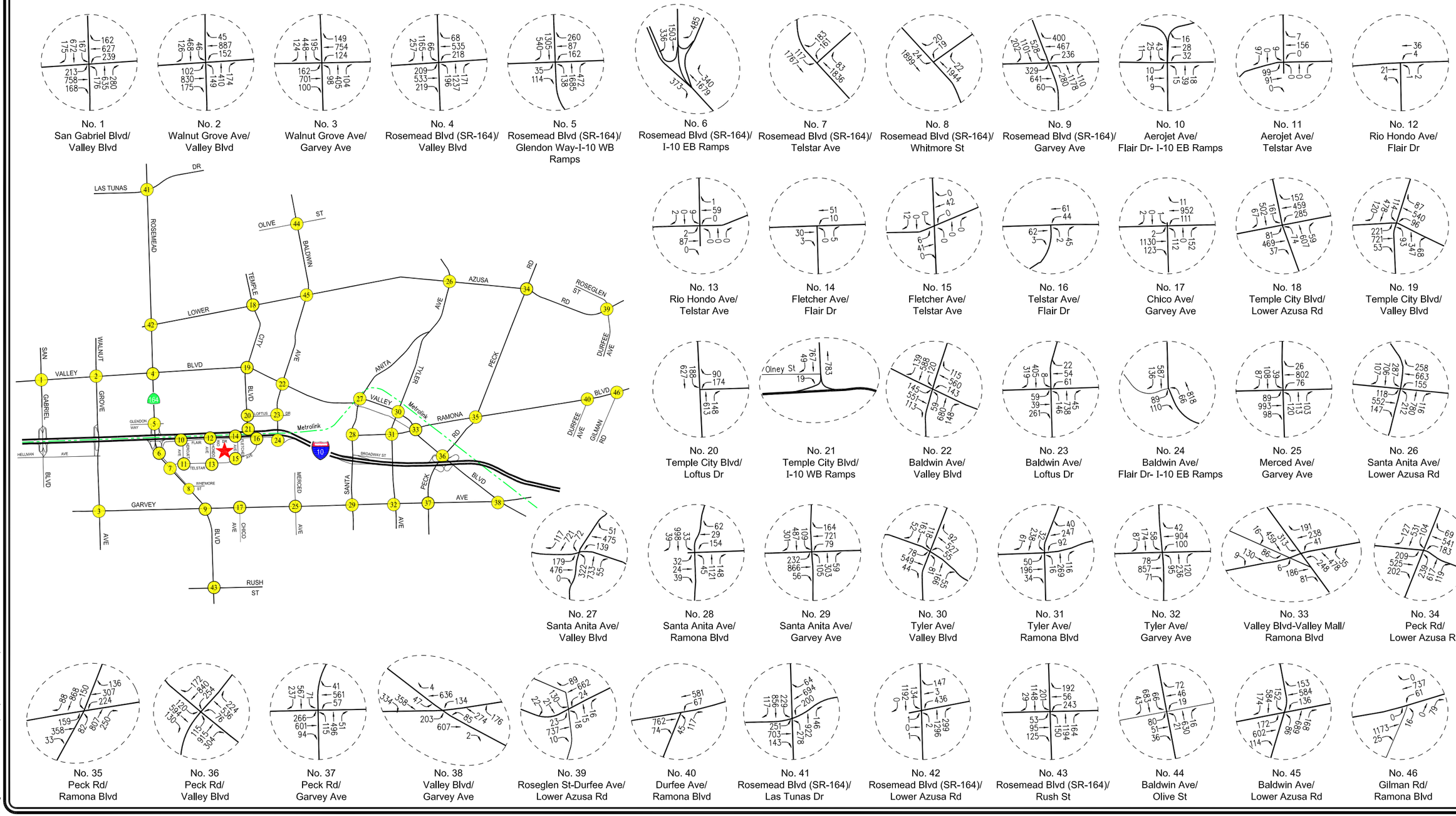

NOT TO SCALE

LINSCOTT, LAW & GREENSPAN, engineers

FIGURE 6-3
EXISTING TRAFFIC VOLUMES
SATURDAY MID-DAY PEAK HOUR
FLAIR SPECTRUM SPECIFIC PLAN

o:\job_file\4074\dwg\f6-3.dwg LDP 10:39:22 09/24/2014 rodriquez

7.0 CUMULATIVE DEVELOPMENT PROJECTS

The forecast of future pre-project conditions was prepared in accordance to procedures outlined in Section 15130 of the CEQA Guidelines. Specifically, the CEQA Guidelines provide two options for developing the future traffic volume forecast:

> "(A) A list of past, present, and probable future projects producing related or cumulative impacts, including, if necessary, those projects outside the control of the [lead] agency, or
>
> (B) A summary of projections contained in an adopted local, regional or statewide plan, or related planning document, that describes or evaluates conditions contributing to the cumulative effect. Such plans may include: a general plan, regional transportation plan, or plans for the reduction of greenhouse gas emissions. A summary of projections may also be contained in an adopted or certified prior environmental document for such a plan. Such projections may be supplemented with additional information such as a regional modeling program. Any such document shall be referenced and made available to the public at a location specified by the lead agency."

Accordingly, the traffic analysis provides a highly conservative estimate of future pre-project traffic volumes as it incorporates both the "A" and "B" options outlined in the CEQA Guidelines for purposes of developing the forecast.

7.1 Related Projects

A forecast of on-street traffic conditions prior to occupancy of the proposed project was prepared by incorporating the potential trips associated with other known development projects (related projects) in the area. With this information, the potential impact of the proposed project can be evaluated within the context of the cumulative impact of all ongoing development. The related projects research was based on information on file at the Cities of El Monte, Arcadia, Rosemead, San Gabriel, South El Monte, and Temple City. The list of related projects in the project site area is presented in ***Table 7-1***. The location of the related projects is shown in ***Figure 7-1***.

Traffic volumes expected to be generated by the related projects were calculated using rates provided in the Institute of Transportation Engineers' (ITE) *Trip Generation Manual*[8]. The related projects' respective traffic generation for the weekday AM and PM peak hours and Saturday mid-day peak hour, as well as on a daily basis for a typical weekday and Saturday, is summarized in *Table 7-1*. The distribution of the related projects traffic volumes to the study intersections during the weekday AM and PM and Saturday mid-day peak hours are displayed in ***Figures 7-2, 7-3*** and ***7-4***, respectively.

[8] Institute of Transportation Engineers *Trip Generation Manual*, 9th Edition, Washington, D.C., 2012.

Table 7-1
RELATED PROJECTS LIST AND TRIP GENERATION [1]

MAP NO.	PROJECT STATUS	PROJECT NAME/NUMBER ADDRESS/LOCATION	LAND USE DATA LAND-USE	LAND USE DATA SIZE	PROJECT DATA SOURCE	DAILY TRIP ENDS [2] VOLUMES	AM PEAK HOUR VOLUMES [2] IN	AM PEAK HOUR VOLUMES [2] OUT	AM PEAK HOUR VOLUMES [2] TOTAL	PM PEAK HOUR VOLUMES [2] IN	PM PEAK HOUR VOLUMES [2] OUT	PM PEAK HOUR VOLUMES [2] TOTAL	SAT. DAILY TRIP ENDS [2] VOLUMES	SAT. MIDDAY PEAK HOUR VOLUMES [2] IN	SAT. MIDDAY PEAK HOUR VOLUMES [2] OUT	SAT. MIDDAY PEAK HOUR VOLUMES [2] TOTAL
City of El Monte																
E1	Proposed	9358 Telstar Avenue	Seminary	40,000 GSF	[3]	1,100	89	31	120	59	43	102	449	32	25	57
E2	Proposed	11301-11401 Garvey Avenue	Residential	114 DU	[4]	758	12	46	58	46	25	71	728	30	29	59
			Retail	5,400 GLSF	[5]	231	3	2	5	10	10	20	270	14	12	26
			(Less Existing Auto Dealership)	(43,800) GSF	[6]	(1,415)	(63)	(21)	(84)	(46)	(69)	(115)	(1,303)	(88)	(88)	(176)
E3	Proposed	10525 Valley Boulevard	Warehouse	10,000 GSF	[7]	36	2	1	3	1	2	3	12	1	0	1
E4	Proposed	12432 Valley Boulevard	Commercial	29,928 GLSF	[5]	1,278	18	11	29	53	58	111	1,496	75	69	144
E5	Proposed	4127-4143 Rowland Avenue	Residential	68 DU	[4]	452	7	28	35	27	15	42	435	18	17	35
E6	Proposed	3268 Rosemead Boulevard	Office	6,700 GSF	[8]	74	9	1	10	2	8	10	16	2	1	3
			Showroom	5,500 GLSF	[8]	61	8	1	9	1	7	8	14	1	1	2
E7	Proposed	11640-11710 Valley Boulevard	Residential	78 DU	[4]	519	8	32	40	31	17	48	498	21	20	41
			Commercial	30,000 GLSF	[5]	1,281	18	11	29	53	58	111	1,499	75	70	145
E8	Proposed	4704-4716 Peck Road	Residential	49 DU	[4]	326	5	20	25	20	10	30	313	13	12	25
E9	Proposed	4422-4436 Bannister Street	Residential	23 DU	[4]	153	2	10	12	9	5	14	147	6	6	12
E10	Proposed	4400 Temple City Boulevard	Industrial	111,380 GSF	[9]	776	90	12	102	13	95	108	148	8	8	16
E11	Proposed	3708 Cypress Avenue	Residential	12 DU	[4]	80	1	5	6	5	2	7	77	3	3	6
E12	Proposed	11022-11048 Garvey Avenue	Residential	69 DU	[4]	459	7	28	35	28	15	43	441	18	18	36
			Retail	2,154 GLSF	[5]	92	1	1	2	4	4	8	108	5	5	10
E13	Proposed	4000 Arden Drive	Commercial	182,429 GLSF	[10]	7,595	155	122	277	280	292	572	9,588	397	396	793
E14	Proposed	12228 Chosen Street	Manufacturing	29,365 GSF	[11]	112	16	5	21	8	13	21	44	4	4	8
E15	Proposed	9920 Valley Boulevard	Hotel	133 Rooms	[12]	1,087	41	29	70	41	39	80	1,089	54	42	96
E16	Approved	4213-4217 Temple City Boulevard	Industrial	502,020 GSF	[9]	3,500	407	55	462	58	429	487	662	33	37	70
E17	Under Construction	Gateway TOD East of Rio Hondo Channel and West of Santa Anita Avenue	Residential	485 DU	[4]	3,225	49	198	247	196	105	301	3,099	126	126	252
			Retail	25,000 GLSF	[5]	1,068	15	9	24	45	48	93	1,249	63	58	121
E18	Proposed	Santa Fe Trail Project Northeast Corner of Santa Anita Avenue/Valley Mall	Retail	115,000 GLSF	[5]	4,911	68	42	110	205	222	427	5,747	288	266	554
E19	Approved	Ramona Crossings Ramona Boulevard between Santa Anita Avenue and Tyler Avenue	Residential	40 DU	[4]	266	4	16	20	16	9	25	256	11	10	21
E20	Under Construction	12417-12467 Denholm Drive	Single-Family Residential	62 DU	[13]	590	12	35	47	39	23	62	614	31	27	58
E21	Approved	4610 Peck Road	Condominium	23 DU	[14]	134	2	8	10	8	4	12	130	6	5	11
E22	Approved	9235 Whitmore Street	General Office	60,000 GSF	[8]	662	83	11	94	15	74	89	148	14	12	26

Table 7-1 (Continued)
RELATED PROJECTS LIST AND TRIP GENERATION [1]

MAP NO.	PROJECT STATUS	PROJECT NAME/NUMBER ADDRESS/LOCATION	LAND USE DATA LAND-USE	LAND USE DATA SIZE	PROJECT DATA SOURCE	DAILY TRIP ENDS [2] VOLUMES	AM PEAK HOUR VOLUMES [2] IN	AM PEAK HOUR VOLUMES [2] OUT	AM PEAK HOUR VOLUMES [2] TOTAL	PM PEAK HOUR VOLUMES [2] IN	PM PEAK HOUR VOLUMES [2] OUT	PM PEAK HOUR VOLUMES [2] TOTAL	SAT. DAILY TRIP ENDS [2] VOLUMES	SAT. MIDDAY PEAK HOUR VOLUMES [2] IN	SAT. MIDDAY PEAK HOUR VOLUMES [2] OUT	SAT. MIDDAY PEAK HOUR VOLUMES [2] TOTAL
City of El Monte (Continued)																
E23	Approved	4304 Temple City Boulevard	Industrial	24,945 GSF	[9]	174	20	3	23	3	21	24	32	1	2	3
E24	Approved	9133 Garvey Avenue	Industrial	96,659 GSF	[9]	674	78	11	89	11	83	94	128	7	7	14
E25	Proposed	Norm's Restaurant 10606 Valley Boulevard	Restaurant	7,600 GSF	[15]	966	45	37	82	45	30	75	1,204	57	50	107
City of San Gabriel																
S1	Completed	402-404 South San Gabriel Boulevard	Condominium	31 DU	[14]	180	2	12	14	11	5	16	176	8	7	15
			Retail	3,710 GLSF	[5]	158	2	2	4	7	7	14	185	9	9	18
			Restaurant	3,500 GSF	[15]	445	21	17	38	20	14	34	554	26	23	49
S2	Approved	221 East Valley Boulevard	Hotel	316 Rooms	[16]	2,967	116	86	202	118	96	214	3,111	154	120	274
			Restaurant/Bar	10,400 GSF												
			Banquet	7,890 GSF												
			Conference	3,000 GSF												
S3	Approved	130 South Mission Drive	Condominium	11 DU	[14]	64	1	4	5	4	2	6	62	3	2	5
			Retail	5,300 GLSF	[5]	226	3	2	5	10	10	20	265	14	12	26
S4	Proposed	1320 East Las Tunas Drive	General Office	8,600 GSF	[8]	95	11	2	13	2	11	13	21	2	2	4
S5	Proposed	235 Arroyo Drive	Condominium	46 DU	[14]	267	3	17	20	16	8	24	261	12	10	22
S6	Proposed	704-712 West Las Tunas Drive	Condominium	37 DU	[14]	215	3	13	16	13	6	19	210	9	8	17
			Retail	17,768 GLSF	[5]	759	11	6	17	32	34	66	888	45	41	86
S7	Proposed	416 East Las Tunas Drive	Condominium	15 DU	[14]	87	1	6	7	5	3	8	85	4	3	7
			Live/Work	18 DU	[14]	105	1	7	8	6	3	9	102	4	4	8
			Retail	6,200 GLSF	[5]	265	4	2	6	11	12	23	310	16	14	30
S8	Proposed	825 East Broadway	Condominium	12 DU	[14]	70	1	4	5	4	2	6	68	3	3	6
			Retail	3,105 GLSF	[5]	133	2	1	3	6	6	12	155	8	7	15
S9	Approved	835 El Monte Street	Condominium	88 DU	[14]	511	7	32	39	31	15	46	499	22	19	41
S10	Proposed	101 East Valley Boulevard	Condominium	56 DU	[14]	325	4	21	25	19	10	29	318	14	12	26
			Retail	10,000 GLSF	[5]	427	6	4	10	18	19	37	500	25	23	48
S11	Proposed	101-111 West Valley Boulevard	Hotel	218 Rooms	[12]	1,781	68	48	116	67	64	131	1,785	88	69	157
			Condominium	87 DU	[14]	505	6	32	38	30	15	45	493	22	19	41
			Retail	29,000 GLSF	[5]	1,238	17	11	28	52	56	108	1,449	73	67	140
			Restaurant	16,000 GSF	[15]	2,034	95	78	173	95	63	158	2,534	119	106	225
			Fitness Center	10,500 GSF	[17]	346	8	7	15	21	16	37	219	13	16	29
S12	Proposed	400-420 West Valley Boulevard	Condominium	100 DU	[14]	581	7	37	44	35	17	52	567	25	22	47
			Retail	45,000 GLSF	[5]	1,922	27	16	43	80	87	167	2,249	113	104	217
			Restaurant	25,000 GSF	[15]	3,179	149	121	270	148	98	246	3,959	187	165	352
S13	Proposed	201-217 South San Gabriel Boulevard	Condominium	159 DU	[14]	924	12	58	70	56	27	83	902	41	34	75
			Retail	12,000 GLSF	[5]	512	7	5	12	22	23	45	600	30	28	58
			Restaurant	4,600 GSF	[15]	585	28	22	50	27	18	45	729	34	31	65
S14	Proposed	402 East Las Tunas Drive	Medical Office Condominium	9,000 GSF	[18]	325	17	5	22	9	23	32	81	19	14	33
S15	Proposed	500 East Valley Boulevard	Retail	5,000 GLSF	[5]	214	3	2	5	9	10	19	250	12	12	24
			Restaurant	5,000 GSF	[15]	636	30	24	54	29	20	49	792	37	33	70

Table 7-1 (Continued)
RELATED PROJECTS LIST AND TRIP GENERATION [1]

MAP NO.	PROJECT STATUS	PROJECT NAME/NUMBER ADDRESS/LOCATION	LAND USE DATA LAND-USE	LAND USE DATA SIZE	PROJECT DATA SOURCE	DAILY TRIP ENDS [2] VOLUMES	AM PEAK HOUR VOLUMES [2] IN	AM PEAK HOUR VOLUMES [2] OUT	AM PEAK HOUR VOLUMES [2] TOTAL	PM PEAK HOUR VOLUMES [2] IN	PM PEAK HOUR VOLUMES [2] OUT	PM PEAK HOUR VOLUMES [2] TOTAL	SAT. DAILY TRIP ENDS [2] VOLUMES	SAT. MIDDAY PEAK HOUR VOLUMES [2] IN	SAT. MIDDAY PEAK HOUR VOLUMES [2] OUT	SAT. MIDDAY PEAK HOUR VOLUMES [2] TOTAL
City of Rosemead																
R1	Proposed	8479 Garvey Avenue	Office	5,745 GSF	[8]	63	8	1	9	2	7	9	14	1	1	2
			Retail	5,603 GLSF	[5]	239	3	2	5	10	11	21	280	14	13	27
			Condominium	28 DU	[14]	163	2	10	12	10	5	15	159	7	6	13
R2	Proposed	7801-7825 Garvey Avenue	Retail	4,780 GLSF	[5]	204	3	2	5	9	9	18	239	12	11	23
			Restaurant	10,773 GSF	[15]	1,370	64	52	116	64	42	106	1,706	81	71	152
			Condominium	60 DU	[14]	349	4	22	26	21	10	31	340	15	13	28
R3	Proposed	7419-7459 Garvey Avenue	Supermarket	22,500 GSF	[19]	2,300	48	29	77	109	104	213	3,996	122	118	240
			Retail	18,000 GLSF	[5]	769	11	6	17	32	35	67	899	45	42	87
R4	Proposed	9048 Garvey Avenue	Residential	48 DU	[4]	319	5	19	24	20	10	30	307	13	12	25
			Commercial	6,500 GLSF	[5]	278	4	2	6	12	12	24	325	16	15	31
R5	Proposed	8408 Garvey Avenue	Residential	46 DU	[4]	306	5	18	23	19	10	29	294	12	12	24
			Commercial	11,389 GLSF	[5]	486	7	4	11	20	22	42	569	29	26	55
City of Temple City																
T1	Proposed	9525 Gidley Street	Warehouse	4,076 GSF	[7]	15	1	0	1	0	1	1	5	1	0	1
T2	Proposed	9250 Lower Azusa Road	Condominium	74 DU	[14]	430	6	27	33	25	13	38	420	19	16	35
T3	Proposed	5714 Muscatel Avenue	Preschool and Kindergarten	3,025 GSF	[20]	224	20	17	37	17	20	37	19	3	2	5
T4	Approved	The Gateway Project 9055 Las Tunas Drive and 5700 - 5736 Rosemead Boulevard	Retail	73,000 GLSF	[5]	3,117	43	27	70	130	141	271	3,648	183	169	352
			Restaurant	11,000 GSF	[15]	1,399	65	54	119	65	43	108	1,742	82	73	155
TOTAL						**65,337**	**2,184**	**1,796**	**3,980**	**2,864**	**2,992**	**5,856**	**68,679**	**3,172**	**2,889**	**6,061**

[1] Sources: Planning/Community Development Departments for the Cities of El Monte, San Gabriel, Rosemead, and Temple City. Trip generation for the related projects are based on ITE "Trip Generation Manual", 9th Edition, 2012 (as referenced in the Project Data Source column).
[2] Trips are one-way traffic movements, entering or leaving.
[3] ITE Land Use Code 540 (Junior/Community College) trip generation average rates.
[4] ITE Land Use Code 220 (Apartment) trip generation average rates.
[5] ITE Land Use Code 820 (Shopping Center) trip generation average rates.
[6] ITE Land Use Code 841 (Automobile Sales) trip generation average rates.
[7] ITE Land Use Code 150 (Warehousing) trip generation average rates.
[8] ITE Land Use Code 710 (General Office Building) trip generation average rates.
[9] ITE Land Use Code 110 (General Light Industrial) trip generation average rates.
[10] Trip generation forecasts and traffic assignment provided by the City of El Monte.
[11] ITE Land Use Code 140 (Manufacturing) trip generation average rates.
[12] ITE Land Use Code 310 (Hotel) trip generation average rates.
[13] ITE Land Use Code 210 (Single-Family Detached Housing) trip generation average rates.
[14] ITE Land Use Code 230 (Residential Condominium/Townhouse) trip generation average rates.
[15] ITE Land Use Code 932 (High-Turnover (Sit-Down) Restaurant) trip generation average rates.
[16] Source: "San Gabriel Hotel Project Traffic Impact Study", prepared by LLG Engineers, July 1, 2013.
[17] ITE Land Use Code 492 (Health/Fitness Club) trip generation average rates.
[18] ITE Land Use Code 720 (Medical-Dental Office Building) trip generation average rates.
[19] ITE Land Use Code 850 (Supermarket) trip generation average rates.
[20] ITE Land Use Code 565 (Day Care Center) trip generation average rates.

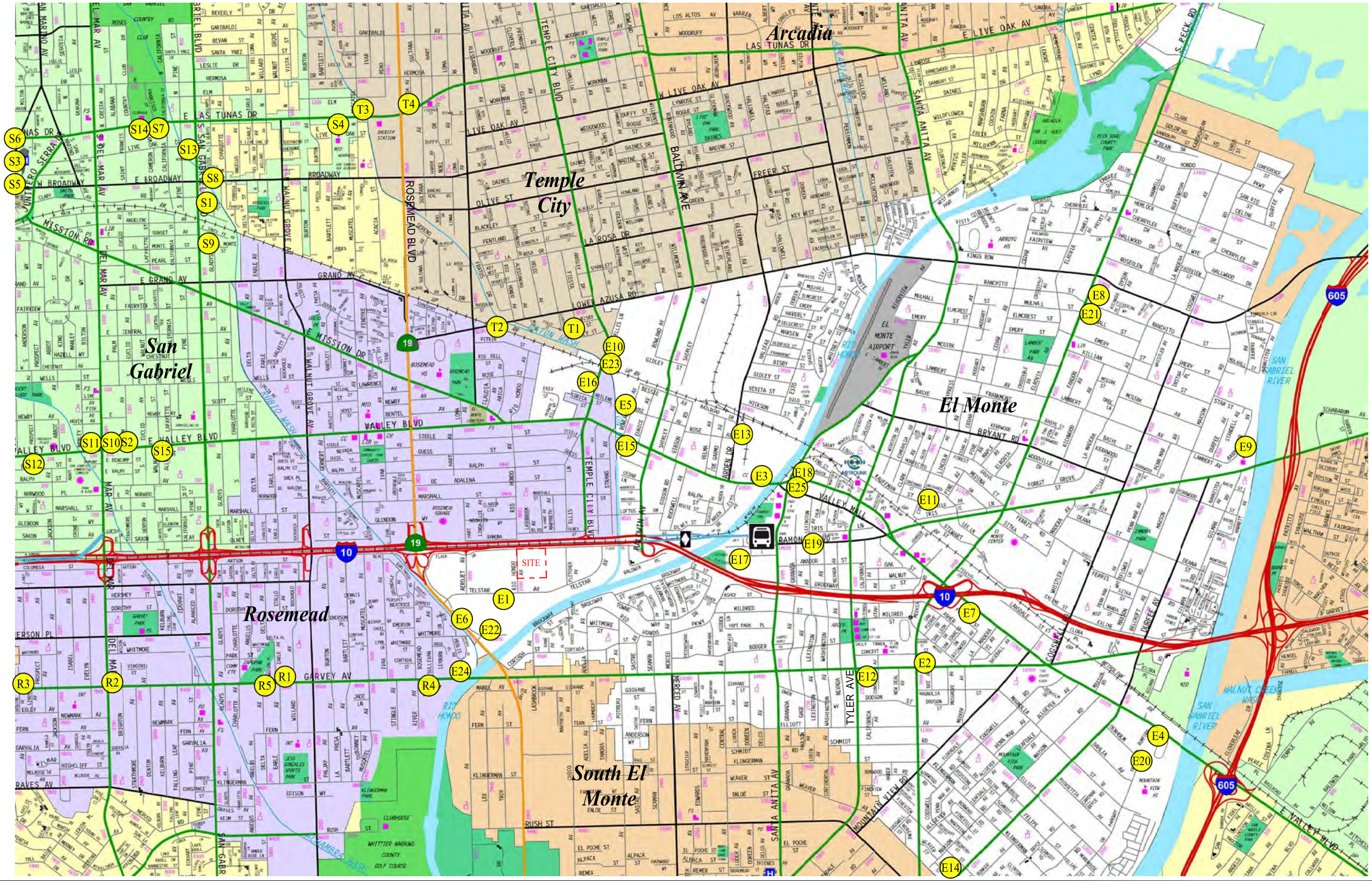

SOURCE: RAND MCNALLY AND COMPANY

NOT TO SCALE

E CITY OF EL MONTE RELATED PROJECT

S CITY OF SAN GABRIEL RELATED PROJECT

R CITY OF ROSEMEAD RELATED PROJECT

T CITY OF TEMPLE CITY RELATED PROJECT

LINSCOTT, LAW & GREENSPAN, engineers

FIGURE 7-1
LOCATION OF RELATED PROJECTS

FLAIR SPECTRUM SPECIFIC PLAN

o:\job_file\4074\dwg\f7-1.dwg LDP 09:09:44 10/03/2014 turney

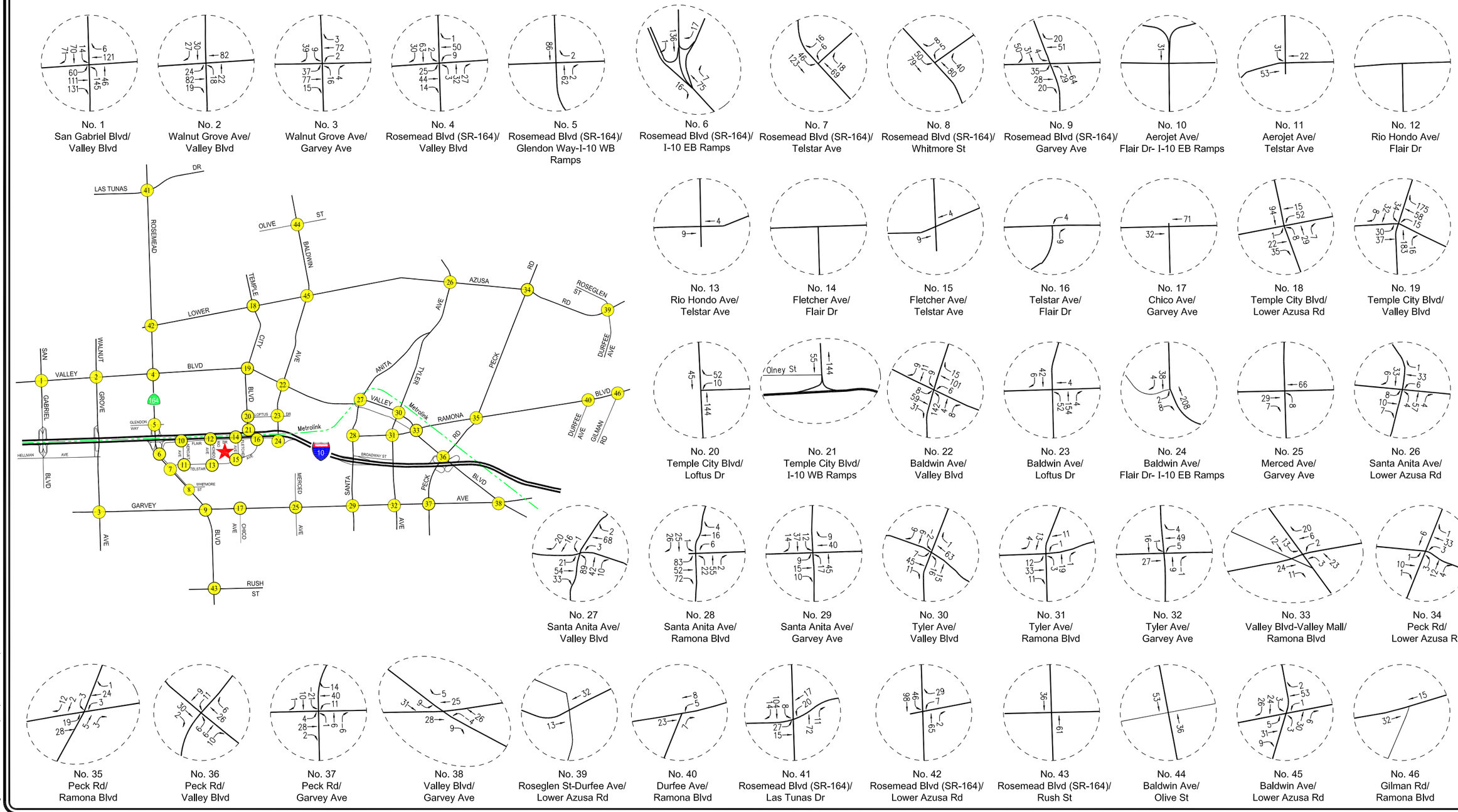

NOT TO SCALE

LINSCOTT, LAW & GREENSPAN, engineers

FIGURE 7-2
RELATED PROJECTS TRAFFIC VOLUMES
WEEKDAY AM PEAK HOUR
FLAIR SPECTRUM SPECIFIC PLAN

o:\job_file\4074\dwg\f7-2.dwg LDP 11:56:46 09/24/2014 rodriquez

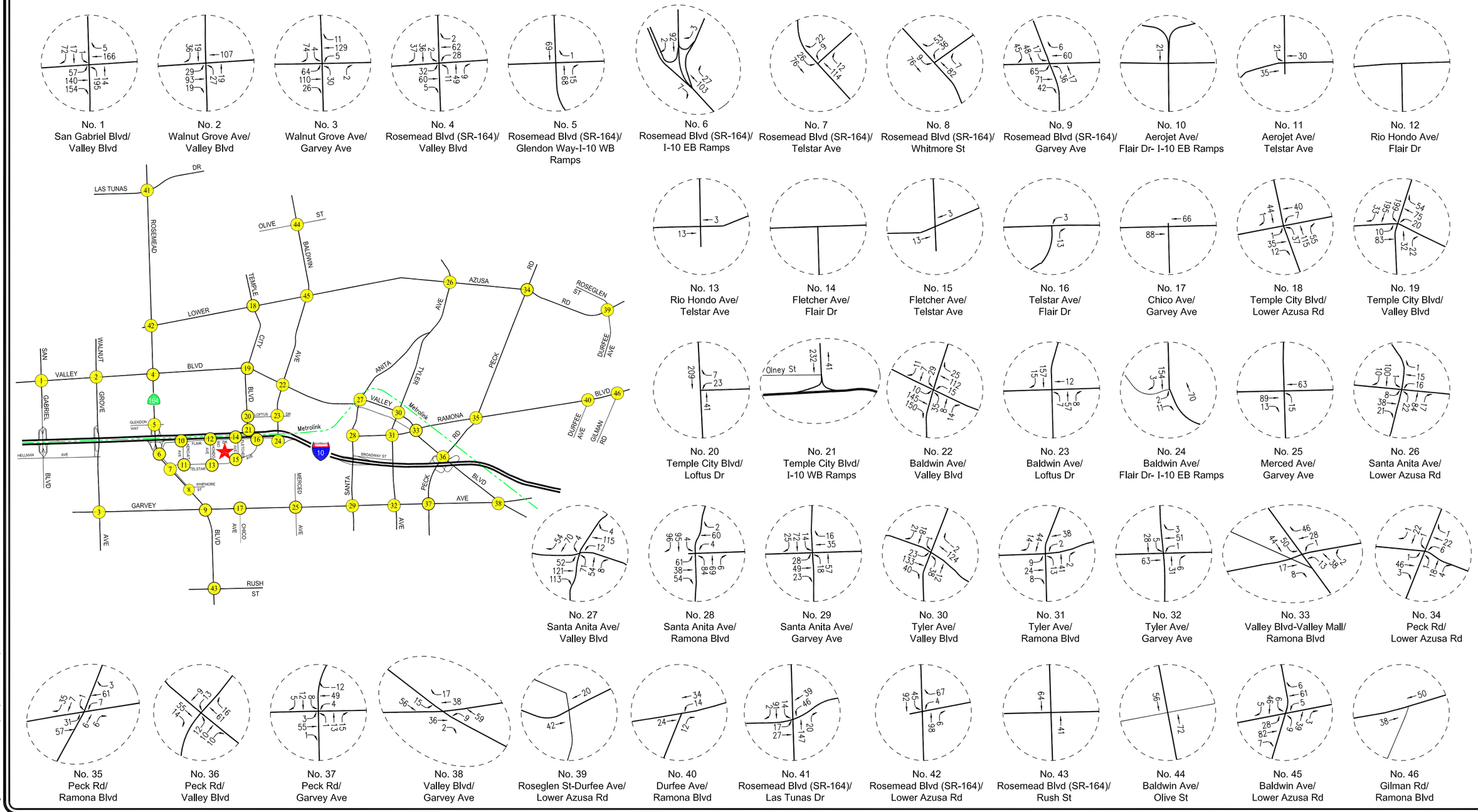

NOT TO SCALE

LINSCOTT, LAW & GREENSPAN, engineers

FIGURE 7-3
RELATED PROJECTS TRAFFIC VOLUMES
WEEKDAY PM PEAK HOUR

FLAIR SPECTRUM SPECIFIC PLAN

o:\job_file\4074\dwg\f7-3.dwg LDP 13:27:29 09/24/2014 rodriquez

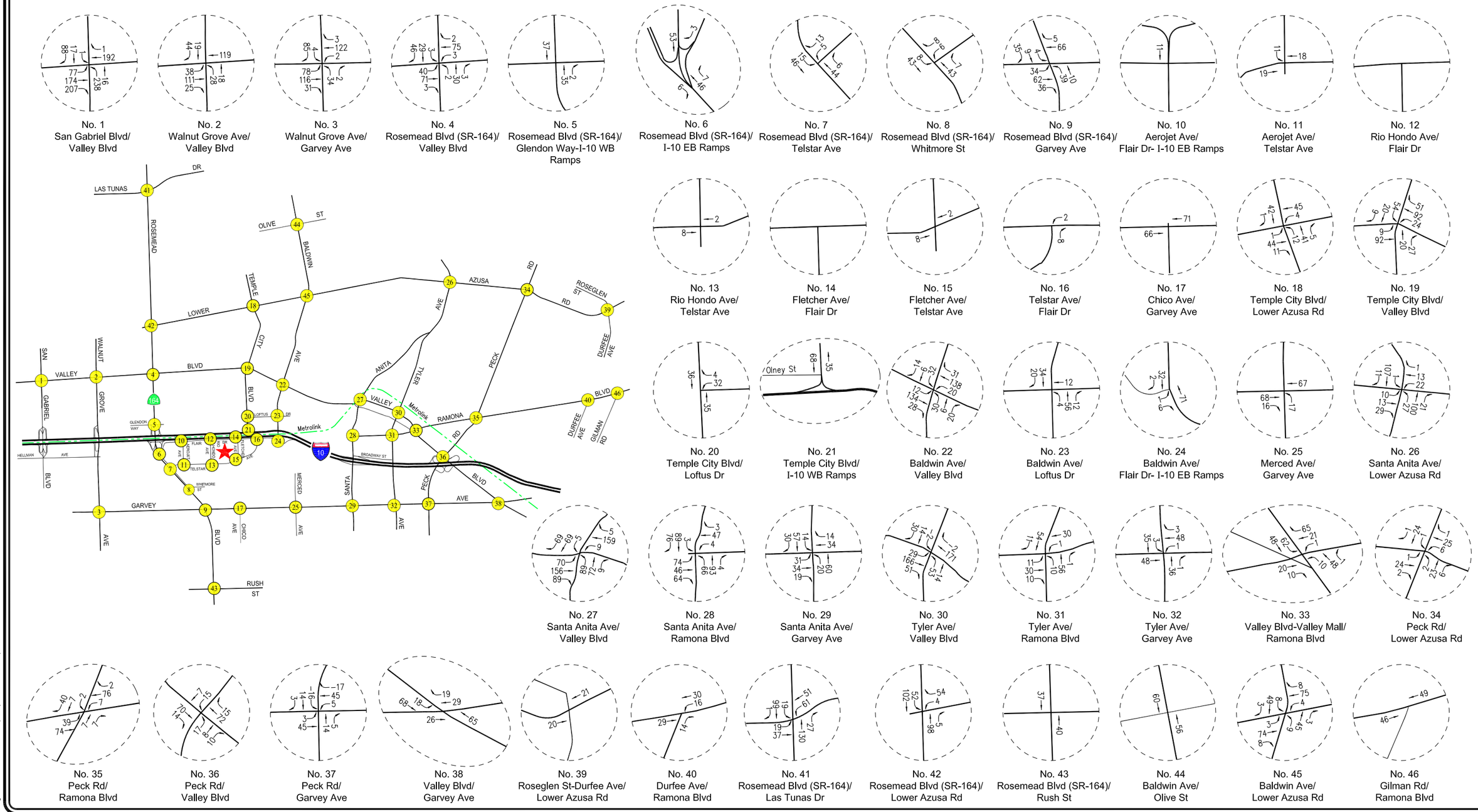

NOT TO SCALE

LINSCOTT, LAW & GREENSPAN, engineers

FIGURE 7-4
RELATED PROJECTS TRAFFIC VOLUMES
SATURDAY MID-DAY PEAK HOUR

FLAIR SPECTRUM SPECIFIC PLAN

o:\job_file\4074\dwg\f7-4.dwg LDP 13:51:20 09/24/2014 rodriquez

7.2 Ambient Traffic Growth Factor

In order to account for area-wide regional growth not included in this analysis, the existing traffic volumes were increased at an annual rate of 0.82 percent (0.82%) to the forecast years 2016 (i.e., Phase I project) and 2019 (i.e., Phase II and anticipated project build-out year). It is noted that based on review of the general traffic growth factors provided in the CMP manual for the project study area (i.e., RSA 25, Pasadena), it is anticipated that the existing traffic volumes are expected to increase at an annual rate of 0.82% per year between the years 2010 and 2020. For the forecast year 2035 (i.e., assuming project build-out), the existing traffic volumes were increased at an annual rate of 0.52 percent (0.52%). It is noted that based on review of the general traffic growth factors provided in the CMP manual for the project study area (i.e., RSA 25, Pasadena), it is anticipated that the existing traffic volumes are expected to increase at an annual rate of 0.52% per year between the years 2010 and 2035. The ambient growth factor was based on general traffic growth factors provided in the *2010 Congestion Management Program for Los Angeles County* (the "CMP manual") and determined in consultation with City staff. Thus, application of this annual growth factor allows for a conservative, worst case forecast of future traffic volumes in the area. Further, it is noted that the CMP manual's traffic growth rate is intended to anticipate future traffic generated by development projects in the project vicinity. Thus, the inclusion in this traffic analysis of both a forecast of traffic generated by known related projects plus the use of an ambient growth traffic factor based on CMP traffic model data results in a conservative estimate of future traffic volumes at the study intersections.

8.0 TRAFFIC FORECASTING METHODOLOGY

In order to estimate the traffic impact characteristics of the project, a multi-step process has been utilized. The first step is trip generation, which estimates the total arriving and departing traffic volumes on a peak hour and daily basis. The traffic generation potential is forecast by applying the appropriate vehicle trip generation equations or rates to the project development tabulation.

The second step of the forecasting process is trip distribution, which identifies the origins and destinations of inbound and outbound project traffic volumes. These origins and destinations are typically based on demographics and existing/anticipated travel patterns in the study area.

The third step is traffic assignment, which involves the allocation of project traffic to study area streets and intersections. Traffic assignment is typically based on minimization of travel time, which may or may not involve the shortest route, depending on prevailing operating conditions and travel speeds. Traffic distribution patterns are indicated by general percentage orientation, while traffic assignment allocates specific volume forecasts to individual roadway links and intersection turning movements throughout the study area.

With the forecasting process complete and project traffic assignments developed, the impact of the proposed project is isolated by comparing operational (i.e., Levels of Service) conditions at the selected key intersections using existing and expected future traffic volumes without and with forecast project traffic. The need for site-specific and/or cumulative local area traffic improvements can then be evaluated and the significance of the project's impacts identified.

8.1 Project Traffic Generation

Traffic volumes expected to be generated by the proposed project during the weekday AM and PM peak hours, Saturday mid-day peak hour, as well as on a daily basis, were estimated using rates published in the ITE *Trip Generation Manual*, 9th Edition publication. Traffic volumes expected to be generated by the hotel component of the proposed project were based upon rates per number of rooms. Traffic volumes expected to be generated by the commercial component of the proposed project were based upon rates per 1,000 square feet of floor area. Traffic volumes expected to be generated by the residential component of the proposed project were based upon rates per number of residential units. Trip generation average rates for the following uses were used to forecast the traffic volumes expected to be generated by the proposed project:

- ITE Land Use Code 230: Condominium
- ITE Land Use Code 310: Hotel
- ITE Land Use Code 823: Factory Outlet Center
- ITE Land Use Code 931: Quality Restaurant

In addition to the above project trip generation forecasts, a forecast was made of likely pass-by trips and internal capture/walk-in trips that could be anticipated at the site for the proposed uses. Pass-by trips are intermediate stops on the way from an origin to a primary trip destination without a route diversion. Pass-by trips are attracted from traffic passing the site on an adjacent street or roadway that offers direct access to the site. The pass-by traffic forecast has been estimated based on existing traffic volumes at the study intersections and recommended practice in Chapter 5 of the ITE *Trip Generation Handbook*[9]. Pass-by adjustments have been applied to the weekday AM and PM peak hour and Saturday mid-day traffic volume forecasts, as well as to the daily traffic volume forecasts, for the commercial components. Additionally, internal capture adjustments were applied to the commercial and restaurant land use components to account for the synergistic effects of the proposed land use mix at the site, as well as neighborhood walk-ins for the local community serving commercial/retail use. Internal capture trips are those trips made internal to the site between land uses in a mixed-use development. When combined within a mixed-use development, land uses tend to interact, and thus attract a portion of each other's trip generation. In consultation with City staff, a 15 percent (15%) adjustment has been applied to the weekday AM and PM peak hour and Saturday mid-day traffic volume forecasts for the hotel, outlet, and restaurant components to account for internal capture, walk-in and transit use. A 15 percent (15%) adjustment was applied to the residential component to account for only transit use.

The trip generation forecast for the proposed project is summarized in ***Table 8-1***. The trip generation forecast for the proposed project was submitted for review and approval by City staff. As presented in *Table 8-1*, the proposed Phase I project is forecast to generate 501 vehicle trips (339 inbound trips and 162 outbound trips) during the weekday AM peak hour and 1,150 vehicle trips (579 inbound trips and 571 outbound trips) during the weekday PM peak hour. Over a 24-hour period, the proposed Phase I project is forecast to generate 18,354 daily trip ends during a typical weekday. The proposed Phase I project is forecast to generate 2,015 vehicle trips (1,048 inbound trips and 967 outbound trips) during the Saturday mid-day peak hour and 25,899 daily trip ends during a typical Saturday.

As presented in *Table 8-1*, the proposed Phase II project is forecast to generate 224 vehicle trips (38 inbound trips and 186 outbound trips) during the weekday AM peak hour and 266 vehicle trips (178 inbound trips and 88 outbound trips) during the weekday PM peak hour. Over a 24-hour period, the proposed Phase II project is forecast to generate 2,963 daily trip ends during a typical weekday. The proposed Phase II project is forecast to generate 239 vehicle trips (129 inbound trips and 110 outbound trips) during the Saturday mid-day peak hour and 2,892 daily trip ends during a typical Saturday.

As also provided in *Table 8-1*, the proposed project at build-out is forecast to generate 725 vehicle trips (377 inbound trips and 348 outbound trips) during the weekday AM peak hour and 1,416 vehicle trips (757 inbound trips and 659 outbound trips) during the weekday PM peak hour. Over a 24-hour period, the proposed project at build-out is forecast to generate 21,317 daily trip ends during

[9] Institute of Transportation Engineers *Trip Generation Handbook*, Washington, D.C., June 2004.

Table 8-1
PROJECT TRIP GENERATION [1]

LAND USE	SIZE	DAILY TRIP ENDS [2] VOLUMES	AM PEAK HOUR VOLUMES [2] IN	AM PEAK HOUR VOLUMES [2] OUT	AM PEAK HOUR VOLUMES [2] TOTAL	PM PEAK HOUR VOLUMES [2] IN	PM PEAK HOUR VOLUMES [2] OUT	PM PEAK HOUR VOLUMES [2] TOTAL	SAT DAILY TRIP ENDS [2] VOLUMES	SAT PEAK HOUR VOLUMES [2] IN	SAT PEAK HOUR VOLUMES [2] OUT	SAT PEAK HOUR VOLUMES [2] TOTAL
Phase I Project												
Hotel [3]	250 Rooms	2,230	97	71	168	86	89	175	2,625	107	111	218
- Less Walk-in/Internal Capture/Transit [4]		(335)	(15)	(11)	(26)	(13)	(13)	(26)	(394)	(16)	(17)	(33)
Factory Outlet Center [5]	640,000 GSF	17,018	313	116	429	689	777	1,466	26,221	1,237	1,189	2,426
- Less Walk-in/Internal Capture/Transit [4]		(2,553)	(47)	(17)	(64)	(103)	(117)	(220)	(3,933)	(186)	(178)	(364)
- Less Pass-by [6], [7]		(1,447)	(27)	(10)	(37)	(199)	(224)	(423)	(2,229)	(273)	(263)	(536)
Quality Restaurant [8]	50,000 GSF	4,498	23	18	41	251	124	375	4,718	319	222	541
- Less Walk-in/Internal Capture/Transit [4]		(675)	(3)	(3)	(6)	(38)	(19)	(57)	(708)	(48)	(33)	(81)
- Less Pass-by [6], [9]		(382)	(2)	(2)	(4)	(94)	(46)	(140)	(401)	(92)	(64)	(156)
Subtotal Phase I Project		**18,354**	**339**	**162**	**501**	**579**	**571**	**1,150**	**25,899**	**1,048**	**967**	**2,015**
Phase II Project												
Condominiums [10]	600 DU	3,486	45	219	264	209	103	312	3,402	152	130	282
- Less Transit [11]		(523)	(7)	(33)	(40)	(31)	(15)	(46)	(510)	(23)	(20)	(43)
Subtotal Phase II Project		**2,963**	**38**	**186**	**224**	**178**	**88**	**266**	**2,892**	**129**	**110**	**239**
TOTAL TRIPS (Phases I and II)		**21,317**	**377**	**348**	**725**	**757**	**659**	**1,416**	**28,791**	**1,177**	**1,077**	**2,254**

[1] Source: ITE "Trip Generation Manual", 9th Edition, 2012.
[2] Trips are one-way traffic movements, entering or leaving.
[3] ITE Land Use Code 310 (Hotel) trip generation average rates.
- Daily Trip Rate: 8.92 trips/occupied rooms; 50% inbound/50% outbound
- AM Peak Hour Trip Rate: 0.67 trips/occupied rooms; 58% inbound/42% outbound
- PM Peak Hour Trip Rate: 0.70 trips/occupied rooms; 49% inbound/51% outbound
- Saturday Daily Trip Rate: 10.50 trips/occupied rooms; 50% inbound/50% outbound
- Saturday Peak Hour of Generator Trip Rate: 0.87 trips/occupied rooms; 49% inbound/51% outbound

[4] A 15% walk-in/internal capture trip adjustment factor has been applied to account for walk-in patrons and internal capture based on the synergistic effects of the proposed project land use mix and for the hotel due to expected taxi and/or shuttle utilization.
[5] ITE Land Use Code 823 (Factory Outlet Center) trip generation average rates.
- Daily Trip Rate: 26.59 trips/1,000 SF of floor area; 50% inbound/50% outbound
- AM Peak Hour Trip Rate: 0.67 trips/1,000 SF of floor area; 73% inbound/27% outbound
- PM Peak Hour Trip Rate: 2.29 trips/1,000 SF of floor area; 47% inbound/53% outbound
- Saturday Daily Trip Rate: 40.97 trips/1,000 SF of floor area; 50% inbound/50% outbound
- Saturday Peak Hour of Generator Trip Rate: 3.79 trips/1,000 SF of floor area; 51% inbound/49% outbound

[6] Pass-By trip reduction adjustment factors were derived based on a review of data provided in Chapter 5 of the ITE "Trip Generation Handbook", Second Edition, June 2004, ITE. Pass-by trips are made as intermediate stops on the way from an origin to a primary trip destination without a route diversion. Pass-by trips are attracted from traffic passing the site on an adjacent street or roadway that offers direct access to the site. Pursuant to ITE guidelines, pass-by adjustments were applied after the internal capture/walk-in/transit reductions were applied.
[7] Pass-by adjustment factors of 10%, 10%, 34%, 10% and 26% were applied to the retail land use weekday daily, AM peak hour, PM peak hour, Saturday daily and Saturday Mid-day peak hour trip generation forecasts, respectively.
[8] ITE Land Use Code 931 (Quality Restaurant) trip generation average rates.
- Daily Trip Rate: 89.95 trips/1,000 SF of floor area; 50% inbound/50% outbound
- AM Peak Hour Trip Rate: 0.81 trips/1,000 SF of floor area; assume 55% inbound/45% outbound
- PM Peak Hour Trip Rate: 7.49 trips/1,000 SF of floor area; 67% inbound/33% outbound
- Saturday Daily Trip Rate: 94.36 trips/1,000 SF of floor area; 50% inbound/50% outbound
- Saturday Peak Hour of Generator Trip Rate: 10.82 trips/1,000 SF of floor area; 59% inbound/41% outbound

[9] Pass-by adjustment factors of 10%, 10%, 44%, 10% and 34% were applied to the restaurant land use weekday daily, AM peak hour, PM peak hour, Saturday daily and Saturday Mid-day peak hour trip generation forecasts, respectively.
[10] ITE Land Use Code 230 (Residential Condominium/Townhouse) trip generation average rates.
- Daily Trip Rate: 5.81 trips/dwelling unit; 50% inbound/50% outbound
- AM Peak Hour Trip Rate: 0.44 trips/dwelling units; 17% inbound/83% outbound
- PM Peak Hour Trip Rate: 0.52 trips/dwelling units; 67% inbound/33% outbound
- Saturday Daily Trip Rate: 5.67 trips/1,000 SF of floor area; 50% inbound/50% outbound
- Saturday Peak Hour of Generator Trip Rate: 0.47 trips/1,000 SF of floor area; 54% inbound/46% outbound

[11] A transit adjustment of 15% has been applied to the condominium component of the project based on the proximity of the El Monte Metrolink Station and Busway and nearby transit lines.

a typical weekday. The proposed project at build-out is forecast to generate 2,254 vehicle trips (1,177 inbound trips and 1,077 outbound trips) during the Saturday mid-day peak hour and 28,791 daily trip ends during a typical Saturday.

8.2 Project Traffic Distribution and Assignment

Project traffic volumes both entering and exiting the site have been distributed and assigned to the adjacent street system based on the following considerations:

- Review of the published trip distribution patterns from the regional travel demand model per the *2010 Congestion Management Program for Los Angeles County* (CMP). The general procedure for calculating trip distribution (page D-38 of the CMP) was followed. The proposed Project is located within regional statistical area (RSA) No. 25. This documentation was utilized as a starting point for the local versus regional splits based on trip type (e.g., residential and non-residential trips and work versus non-work trips).

- The site's proximity to major traffic corridors (i.e., Rosemead Boulevard, Valley Boulevard, Garvey Boulevard, etc.);

- Expected localized traffic flow patterns based on adjacent roadway channelization and presence of traffic signals;

- Existing intersection traffic volumes;

- Existing site parcel access ingress/egress schemes;

- Ingress/egress scheme planned for the proposed project;

- Nearby population and employment centers; and

- Input from City staff.

As described in Sections 2.0 and 3.0, access to the commercial components will be provided via two (2) driveways along Flair Drive (with access to the hotel being provided via the easterly driveway on Flair Drive), while access to/from the residential component of the proposed project will be primarily provided via two driveways on Rio Hondo Avenue. As such, three separate traffic distribution patterns were developed for the proposed project: one for the commercial components, one for the hotel component and one for the residential component. The three trip distribution patterns developed for the proposed project were submitted, reviewed and approved by City of El Monte staff.

The project traffic distribution percentages for the hotel component during the weekday AM and PM peak hours and Saturday mid-day peak hour at the study intersections are illustrated in ***Figure 8-1***. The project traffic distribution percentages for the commercial components during weekday AM and PM peak hours and Saturday mid-day peak hour at the study intersections are illustrated in ***Figure 8-***

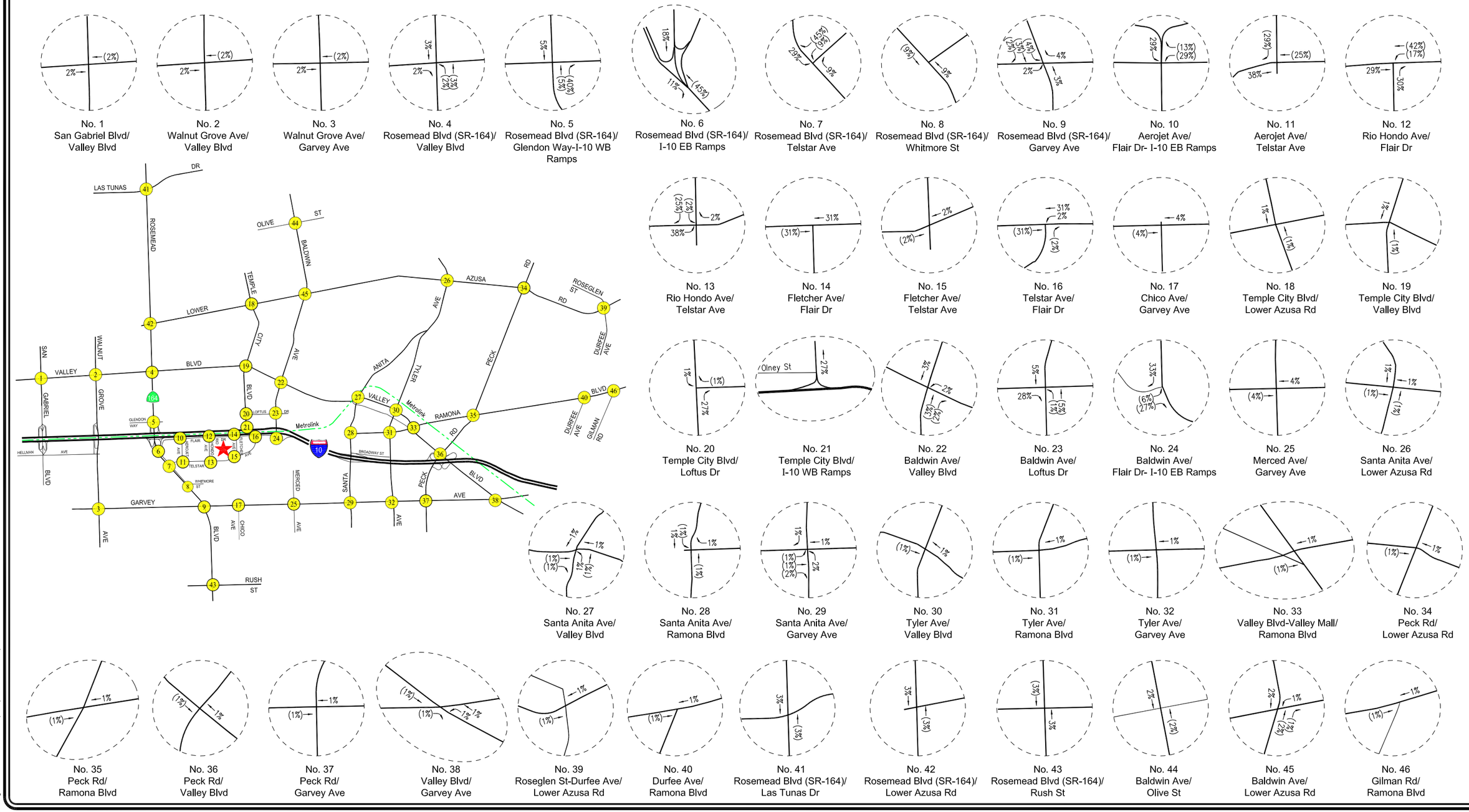

NOT TO SCALE

★ PROJECT SITE

XX = INBOUND PERCENTAGE

(XX) = OUTBOUND PERCENTAGE

LINSCOTT, LAW & GREENSPAN, engineers

FIGURE 8-1
PROJECT TRIP DISTRIBUTION
HOTEL LAND USE COMPONENT
FLAIR SPECTRUM SPECIFIC PLAN

o:\job_file\4074\dwg\f8-1.dwg LDP 14:40:53 09/23/2014 rodriquez

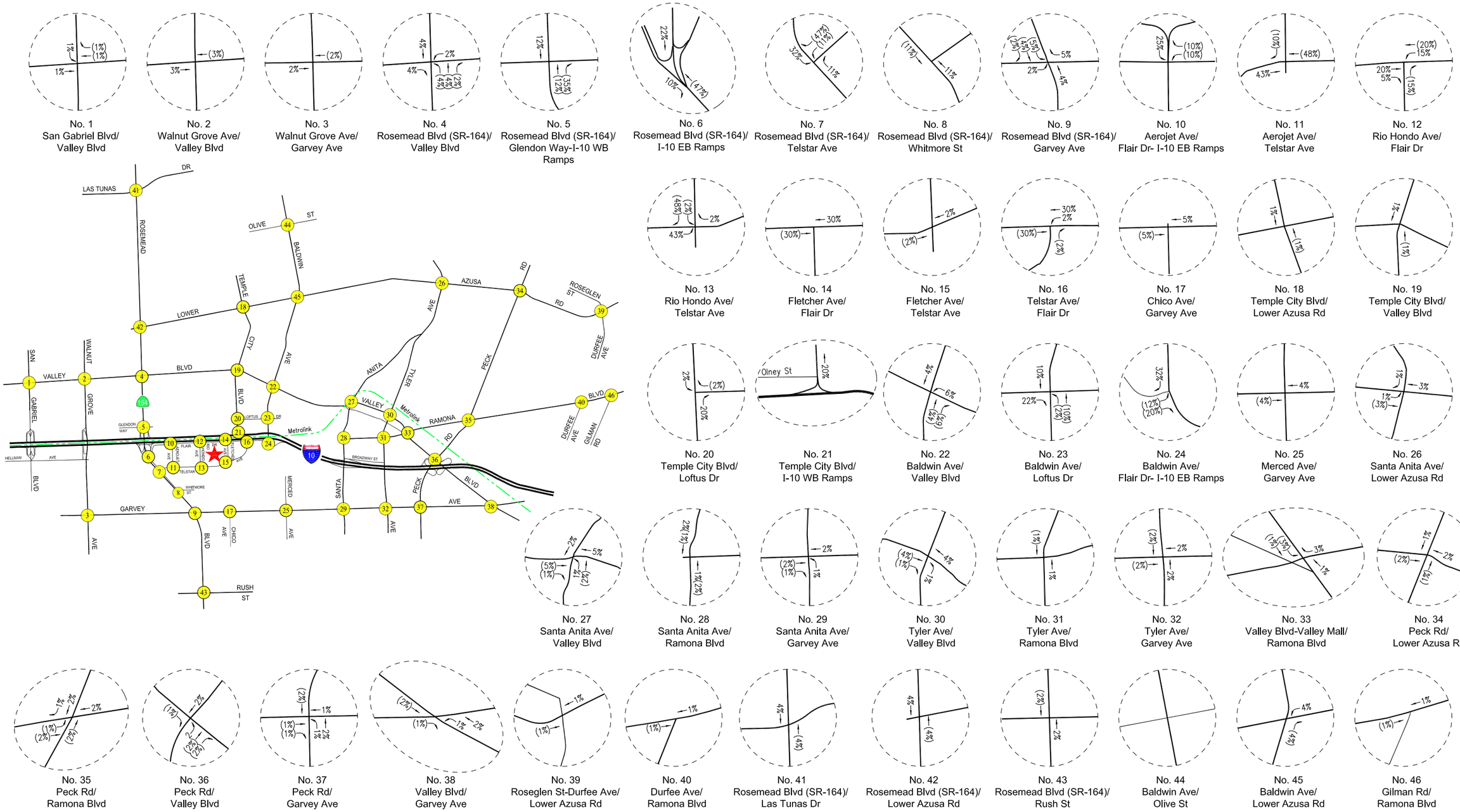

NOT TO SCALE

★ PROJECT SITE

XX = INBOUND PERCENTAGE

(XX) = OUTBOUND PERCENTAGE

LINSCOTT, LAW & GREENSPAN, engineers

FIGURE 8-2
PROJECT TRIP DISTRIBUTION
COMMERCIAL LAND USE COMPONENTS
FLAIR SPECTRUM SPECIFIC PLAN

o:\job_file\4074\dwg\f8-2.dwg LDP 14:51:31 09/23/2014 rodriquez

2. The project traffic distribution percentages for the residential component during weekday AM and PM peak hours and Saturday mid-day peak hour at the study intersections are illustrated in ***Figure 8-3***. The forecast weekday AM and PM peak hours and Saturday mid-day peak hour project traffic volumes at the study intersections for the proposed project are presented as follows:

- Phase I Project Traffic Volumes (i.e., hotel and outlet retail land uses):
  - ***Figure 8-4*** Weekday AM Peak Hour
  - ***Figure 8-5*** Weekday PM Peak Hour
  - ***Figure 8-6*** Saturday Mid-day Peak Hour
- Project Build-out Traffic Volumes (i.e., Phase I project and Phase II residential land use)
  - ***Figure 8-7*** Weekday AM Peak Hour
  - ***Figure 8-8*** Weekday PM Peak Hour
  - ***Figure 8-9*** Saturday Mid-day Peak Hour

The traffic volume assignments presented in the above project traffic volumes figures reflect the traffic distribution characteristics shown in *Figures 8-1, 8-2* and *8-3* and the proposed project traffic generation forecast presented in *Table 8-1*.

8.3 Equivalency Program

The Flair Spectrum Specific Plan incorporates an Equivalency Program that allows for the composition of on-site development to respond to the future needs and demands of the Southern California economy, and changes in the project's requirements. The Equivalency Program provides flexibility for the modifications to land uses and square footages within the Flair Spectrum Specific Plan area. The land use Equivalency Program provides a framework within which permitted land uses can be exchanged for certain other permitted land uses, so long as the criteria of the Equivalency Program are satisfied.

Table 8-2 provides a listing of the equivalency ratios that have been established for the potential on-site land uses. The equivalency ratios are expressed in terms of thousands of square feet of floor area (e.g., in gross square feet for outlet, hotel, condominium and restaurant uses and gross leasable square feet for general retail (non-outlet retail).

8.3.1 Criteria

The land use on any portion of the Specific Plan area may be exchanged for another land use, as long as the new land use is permitted by the Specific Plan, and the new land use does not cause impacts that are greater than those identified in the certified Environmental Impact Report (EIR) for the Specific Plan. Such determination shall be based on consideration of the following factors:

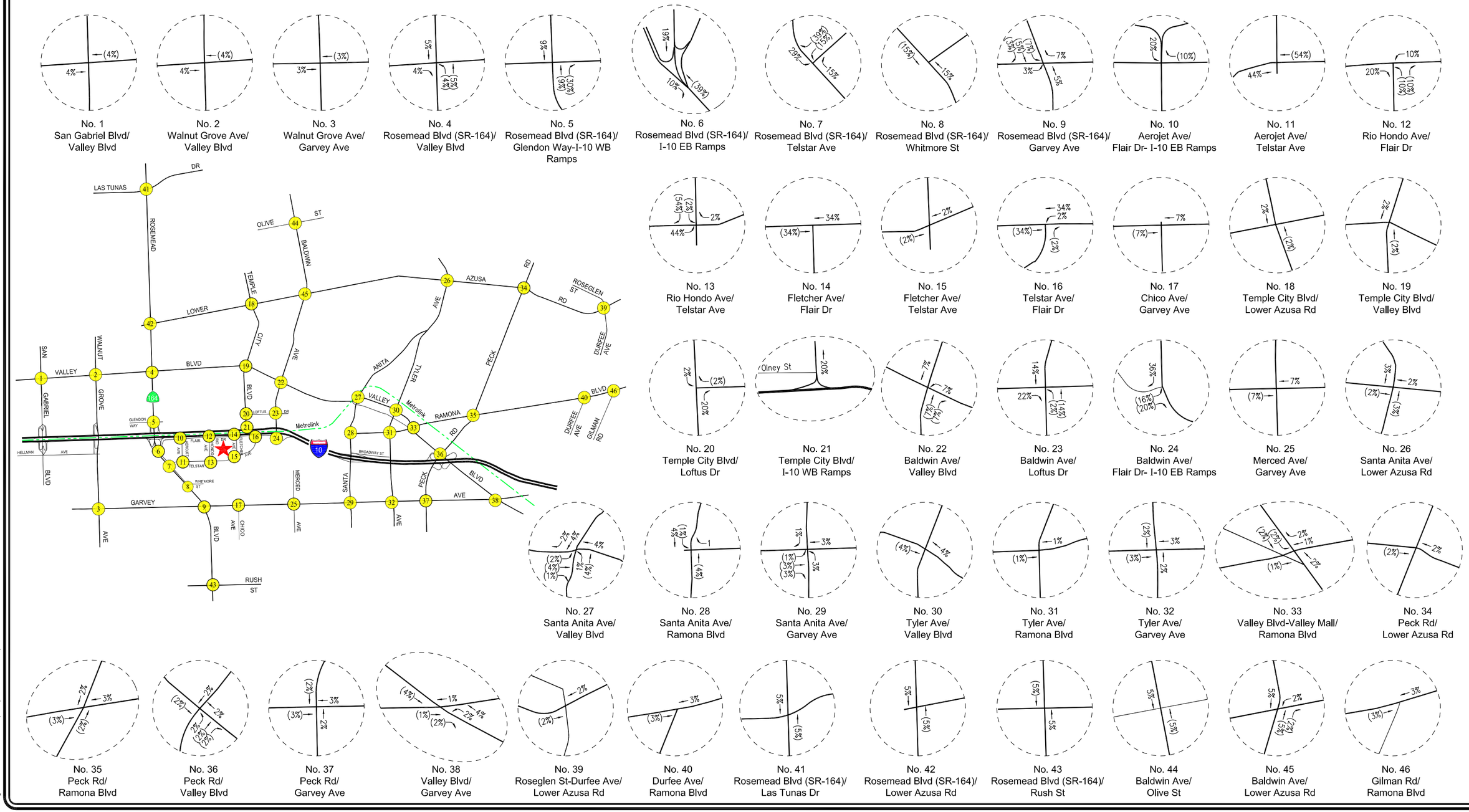

NOT TO SCALE

PROJECT SITE

XX = INBOUND PERCENTAGE

(XX) = OUTBOUND PERCENTAGE

LINSCOTT, LAW & GREENSPAN, engineers

FIGURE 8-3
PROJECT TRIP DISTRIBUTION
RESIDENTIAL LAND USE COMPONENT
FLAIR SPECTRUM SPECIFIC PLAN

o:\job_file\4074\dwg\f8-3.dwg LDP 15:02:57 09/23/2014 rodriquez

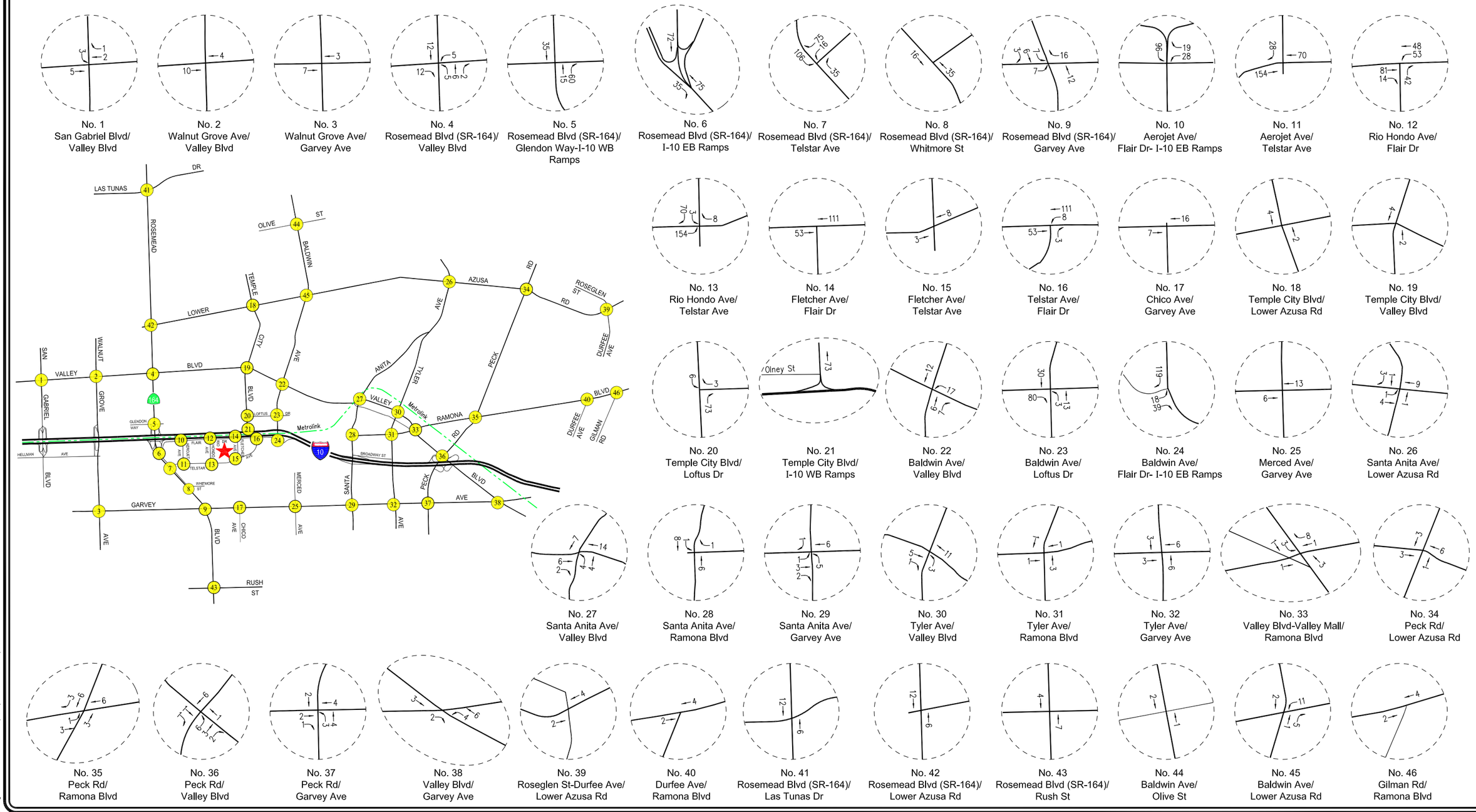

PROJECT SITE

NOT TO SCALE

LINSCOTT, LAW & GREENSPAN, engineers

FIGURE 8-4
PHASE I PROJECT TRAFFIC VOLUMES
WEEKDAY AM PEAK HOUR

FLAIR SPECTRUM SPECIFIC PLAN

o:\job_file\4074\dwg\f8-4.dwg LDP 15:23:42 09/23/2014 rodriquez

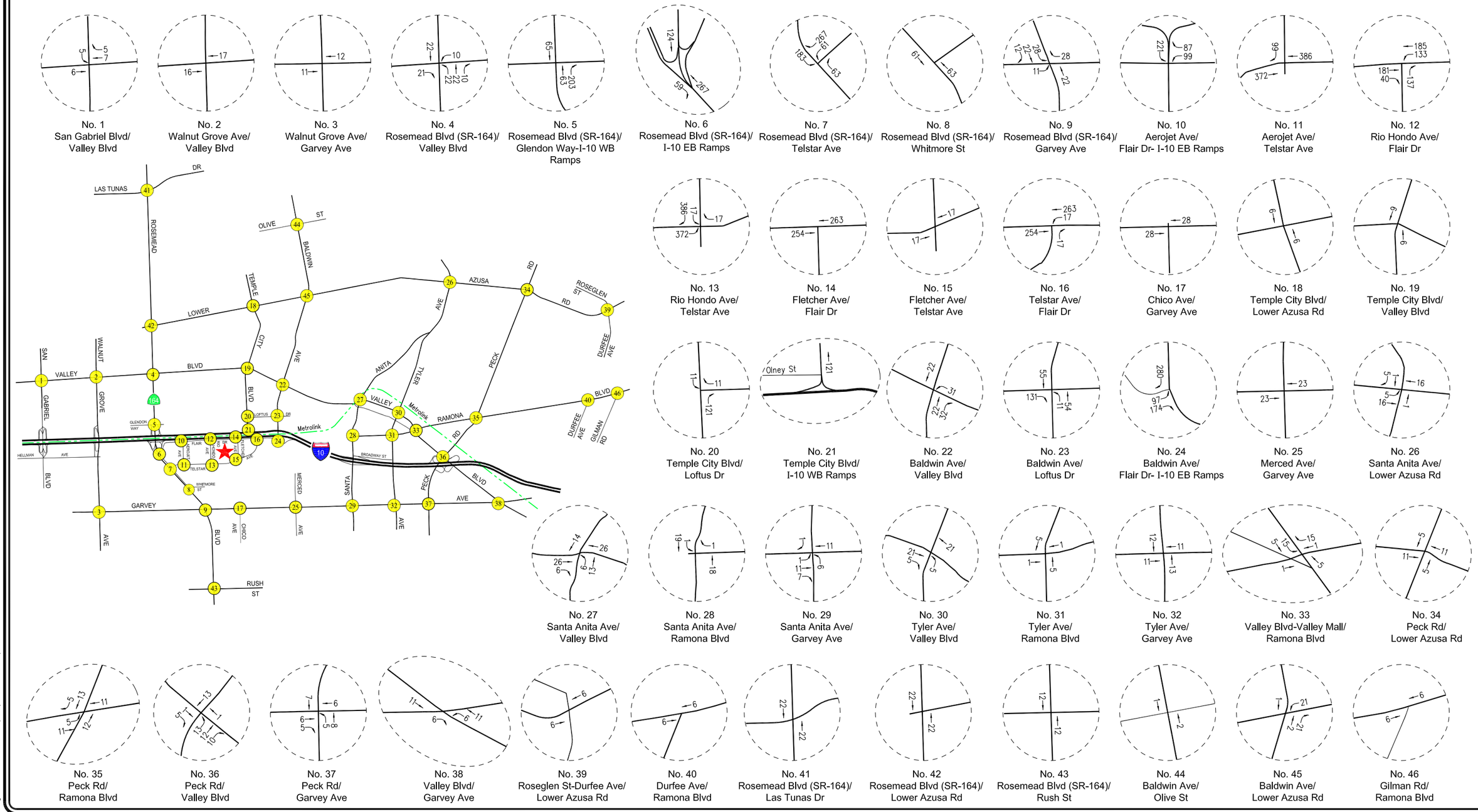

NOT TO SCALE

★ PROJECT SITE

LINSCOTT, LAW & GREENSPAN, engineers

FIGURE 8-5
PHASE I PROJECT TRAFFIC VOLUMES
WEEKDAY PM PEAK HOUR
FLAIR SPECTRUM SPECIFIC PLAN

o:\job_file\4074\dwg\f8-5.dwg LDP 15:39:28 09/23/2014 rodriquez

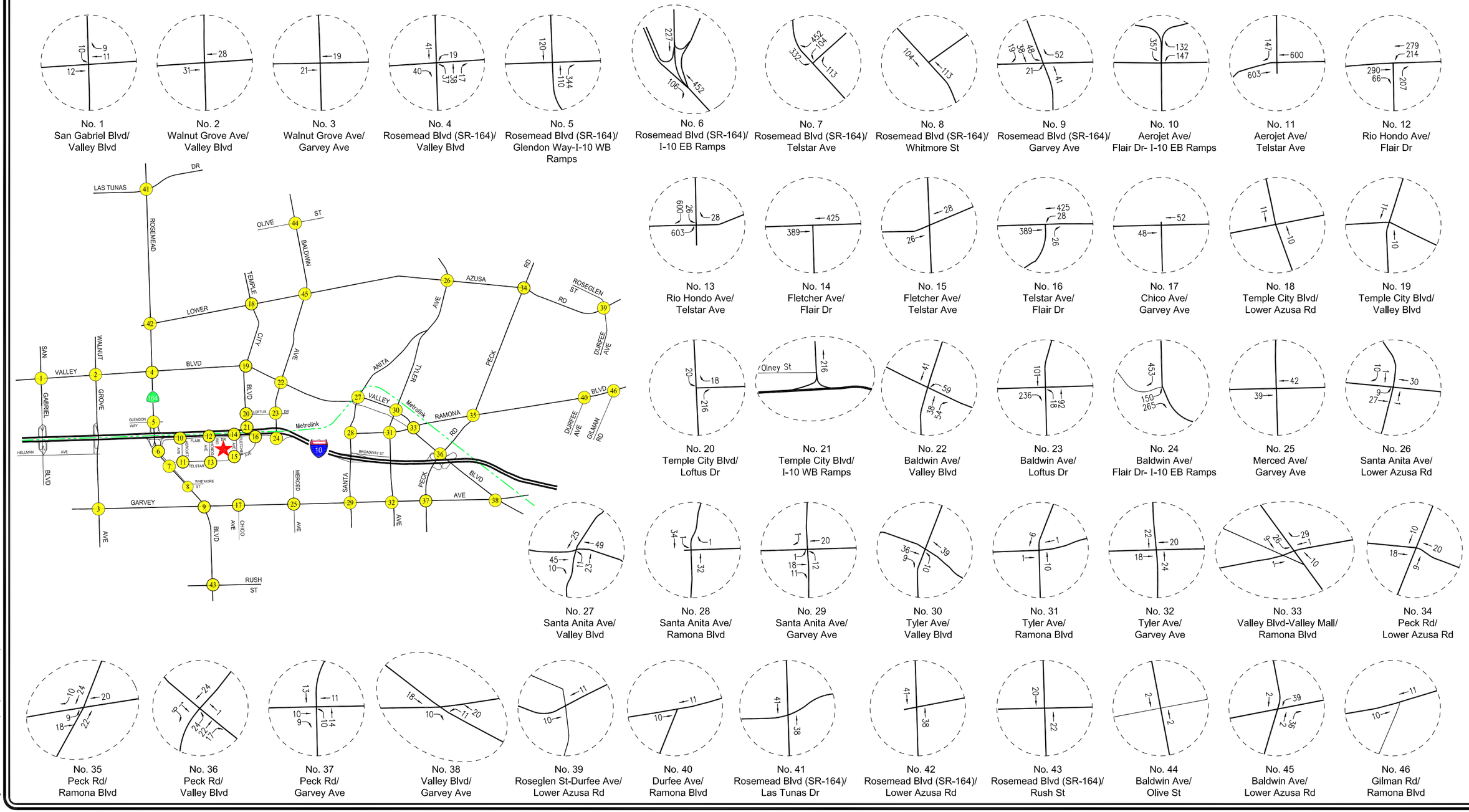

NOT TO SCALE

★ PROJECT SITE

LINSCOTT, LAW & GREENSPAN, engineers

FIGURE 8-6
PHASE I PROJECT TRAFFIC VOLUMES
SATURDAY MID-DAY PEAK HOUR

FLAIR SPECTRUM PROJECT

o:\job_file\4074\dwg\f8-6.dwg LDP 14:33:24 09/24/2014 rodriquez

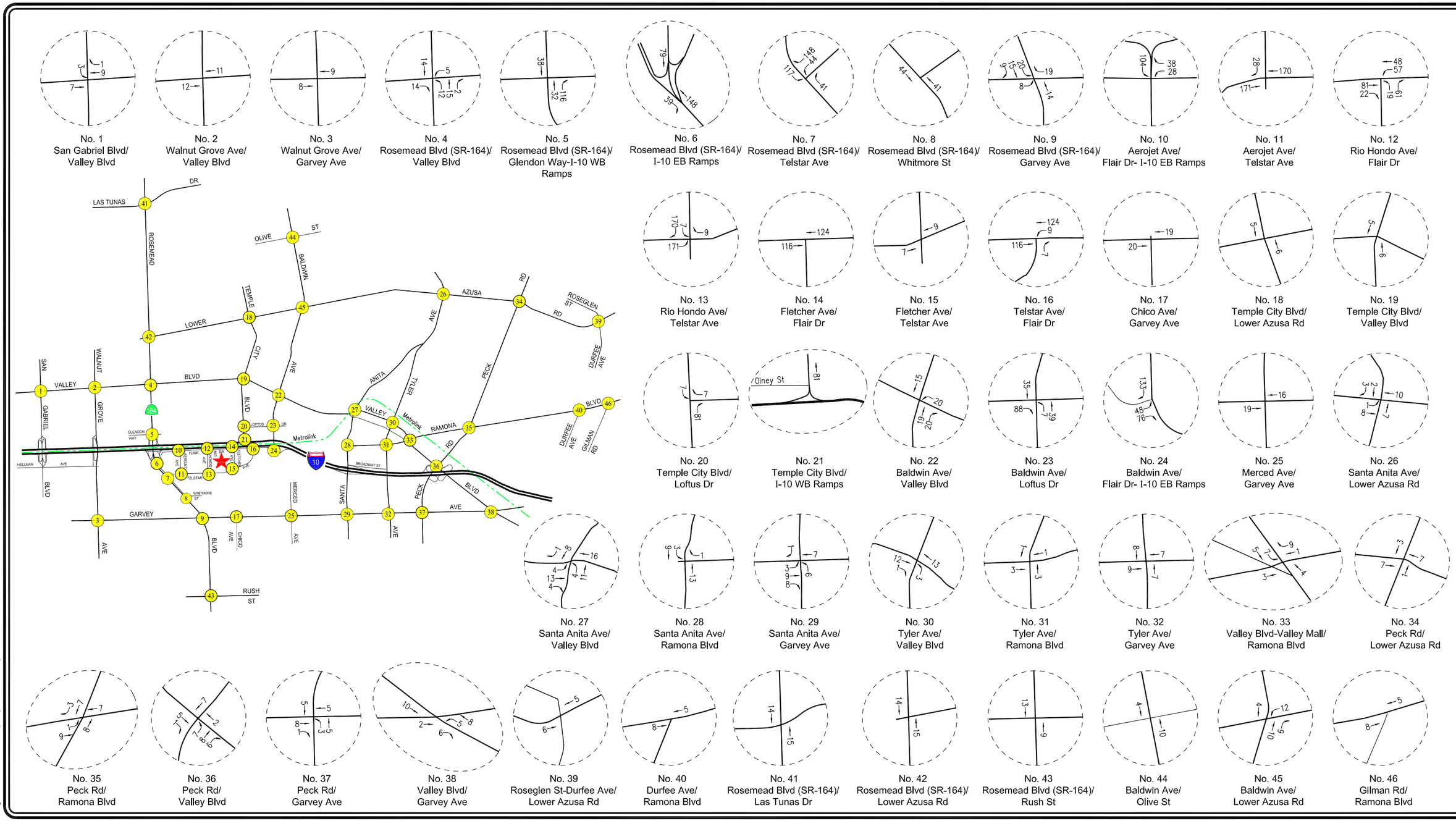

NOT TO SCALE

PROJECT SITE

LINSCOTT, LAW & GREENSPAN, engineers

FIGURE 8-7
PROJECT BUILD-OUT TRAFFIC VOLUMES
WEEKDAY AM PEAK HOUR
FLAIR SPECTRUM SPECIFIC PLAN

o:\job_file\4074\dwg\f8-7.dwg LDP 11:43:02 09/23/2014 rodriquez

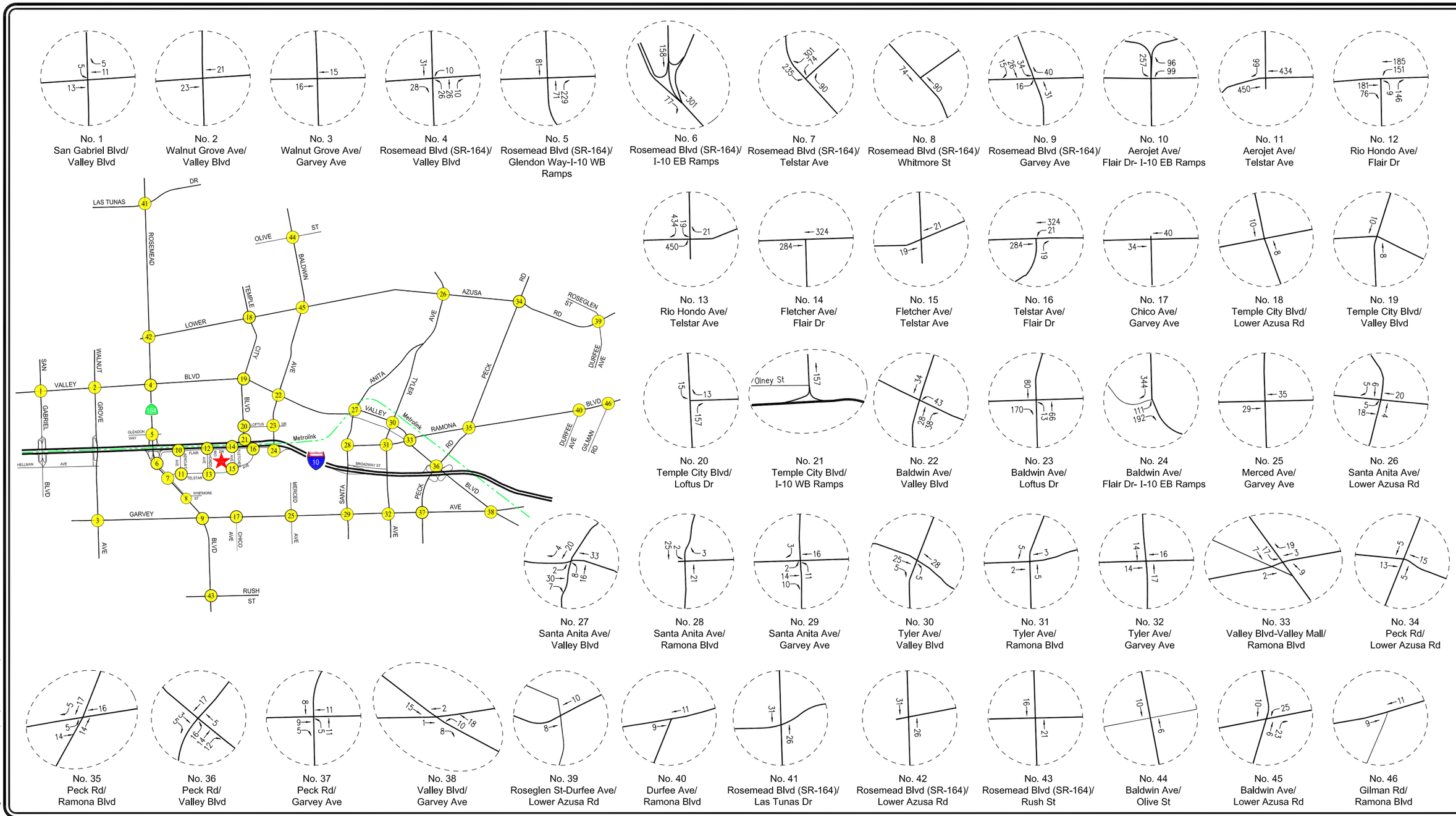

PROJECT SITE

NOT TO SCALE

LINSCOTT, LAW & GREENSPAN, engineers

FIGURE 8-8
PROJECT BUILD-OUT TRAFFIC VOLUMES
WEEKDAY PM PEAK HOUR

FLAIR SPECTRUM SPECIFIC PLAN

o:\job_file\4074\dwg\f8-8.dwg LDP 13:28:44 09/23/2014 rodriquez

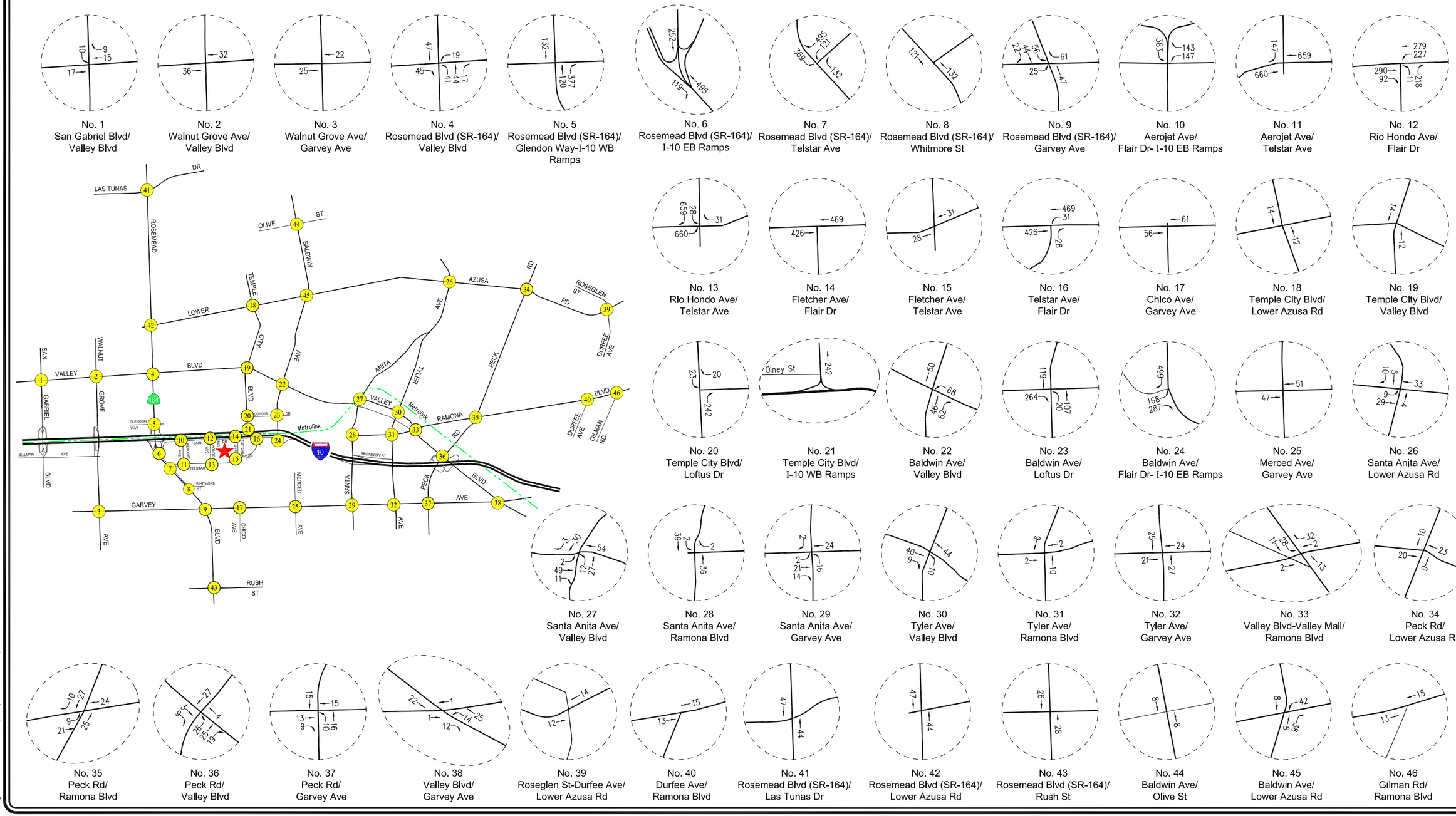

NOT TO SCALE

★ PROJECT SITE

LINSCOTT, LAW & GREENSPAN, engineers

FIGURE 8-9
PROJECT BUILD-OUT TRAFFIC VOLUMES
SATURDAY MID-DAY PEAK HOUR

FLAIR SPECTRUM SPECIFIC PLAN

o:\job_file\4074\dwg\f8-9.dwg LDP 14:07:05 09/23/2014 rodriquez

Table 8-2
DEVELOPMENT EQUIVALENCY MATRIX (RATIOS) [1]

From These Land Use Categories		Equivalency Ratio ***TO*** Convert to These Land Uses						
		Outlet (gsf)	General Office [7] (gsf)	Hotel (gsf)	Quality Restaurant (gsf)	High-Turnover (Sit-Down) Restaurant [8] (gsf)	Condominium (gsf)	General Retail [9] (glsf)
Outlet (gsf)	[3]	--- [2]	1.537	2.489	0.306	0.232	6.735	0.617
Hotel (gsf)	[4]	0.402	0.617	--- [2]	0.123	0.093	2.706	0.248
Quality Restaurant (gsf)	[5]	3.271	5.027	8.141	--- [2]	0.760	22.029	2.019
Condominium (gsf)	[6]	0.148	0.228	0.370	0.045	0.035	--- [2]	0.092

[1] Base trip generation rates per ITE *Trip Generation Manual*, 9th Edition publication.
[2] No conversion necessary, same use.
[3] ITE Land Use Code 823 (Factory Outlet Center) PM peak hour average trip rate = 2.29 trips/1,000 gross square feet (gsf).
[4] ITE Land Use Code 310 (Hotel) PM peak hour average trip rate = 0.70 trips/room and 0.92 trips/1,000 gsf, based on 190,000 gsf = 250 rooms. The gross square footage for the hotel equates to approximately 760 gsf/room.
[5] ITE Land Use Code 931 (Quality Restaurant) PM peak hour average trip rate = 7.49 trips/1,000 gsf.
[6] ITE Land Use Code 230 (Residential Condominium/Townhouse) PM peak hour average trip rates = 0.52 trips/DU and 0.34 trips/1,000 gsf. The gross square footage for the condominium equates to approximately 1,525 gsf/DU, based on 915,000 gsf = 600 DU.
[7] ITE Land Use Code 710 (General Office Building) PM peak hour average trip rate = 1.49 trips/1,000 gsf.
[8] ITE Land Use Code 932 (High-Turnover [Sit-Down] Restaurant) PM peak hour average trip rate = 9.85 trips/1,000 gsf.
[9] ITE Land Use Code 820 (Shopping Center) PM peak hour average trip rate = 3.71 trips/1,000 glsf.

Example 1:
To shift 100,000 gsf of Outlet Retail to General Office use, the matrix shows a conversion factor of 1.537 (from Outlet Retail to General Office). Multiplying this factor by 100,000 results in 153,700. Thus, approximately 153,700 gsf of general office may be developed in lieu of 100,00 gsf of Outlet Retail space.

Example 2:
In order to determine the number of Hotel rooms that could be converted to from Outlet Retail space the following example is provided:
To shift 100,000 gsf of Outlet Retail to Hotel, the matrix shows a conversion factor of 2.489 (from Outlet Retail to Hotel). Multiplying this factor by 100,000 results in 248,900. Thus, approximately 248,900 gsf of Hotel may be developed in lieu of 100,000 gsf of Outlet Retail.
In order to determine the number of rooms, the value of 760 gsf/room is applied. Therefore, a total of 327 Hotel rooms may be developed (i.e., 248,900 gsf/760 gsf = 327 rooms) in lieu of 100,000 gsf of Outlet Retail space.

1. The development shall comply with all provisions of the Specific Plan and implement all applicable mitigation measures as set forth in the Project's Mitigation Monitoring and Reporting Program.

2. There shall be no fewer than 160,000 gross square feet of outlet retail and 300 dwelling units (approximately 457,500 gross square feet) at build-out constructed and/or planned within the Specific Plan area.

3. Conversion of the uses shall not cause any of the threshold levels shown in the certified EIR to be exceeded. If the uses proposed as part of this plan, or any newly proposed uses are found to be equivalent using the matrix provided in *Table 8*-2, the impacts are considered to be below the threshold levels identified in the certified EIR.

Under the Equivalency Program, no change to the Specific Plan's development standards and design guidelines (i.e., height limitations, open space requirements, etc.) are permitted. For any land uses converted under the Equivalency Program, all of the regulations in the Specific Plan applicable to the converted land use shall apply. For example, if the conversion results in a change from outlet retail square footage to office square footage, all of the Specific Plan's development standards and design guidelines applicable to the outlet retail use shall apply to the new office use.

8.3.2 Submittal and Approval Procedures

Conversion of land uses under the Equivalency Program shall occur through the following procedures:

1. The conversion of land uses shall be initiated by the applicant by filing a request for such action with the Planning Division of the Economic Development Department. The request shall specifically identify the exchange in land uses proposed at that time, accompanied by information which provides sufficient data to review the request.

2. The approval of the conversion of uses under the Equivalency Program shall occur in accordance with the following procedure:

    a. Decision by the Director of Economic Development or his/her designee. When a request for a conversion of land uses proposes less than a 10 percent change in the Development Equivalency Program, but does not exceed the environmental thresholds identified in the certified EIR, the Director of Economic Development or his/her designee shall have the authority to approve, conditionally approve, or deny the request, or refer decisions to the Planning Commission at his or her discretion.. A decision of the Director of Economic Development or his/her designee is subject to appeal to the Planning Commission, pursuant to the El Monte Municipal Code (EMMC).

b. Decision by the Planning Commission. When a request for a conversion of land uses proposes a greater than 10 percent change in the Development Equivalency Program, but does not exceed the environmental thresholds identified in the certified EIR, the request shall be reviewed by the Planning Commission. The Planning Commission shall have the authority to approve, conditionally approve, or deny the request. A decision of the Planning Commission is subject to appeal to the City Council, pursuant to the EMMC.

c. Decision by the City Council. When a request for a conversion of land uses exceeds the environmental thresholds set forth in the Development Equivalency Program, the request shall require approval by the City Council and additional environmental review, pursuant to the California Environmental Quality Act (CEQA).

9.0 TRAFFIC IMPACT ANALYSIS METHODOLOGY

The relative impact of the added project traffic volumes generated by the proposed project during the weekday AM and PM peak hours and Saturday mid-day peak hour was evaluated based on analysis of existing and future operating conditions at the 46 key study intersections, without, then with, the proposed project. In conformance with the City of El Monte and Los Angeles County Congestion Management Program requirements, existing weekday AM and PM peak hour operating conditions for the key signalized study intersections were evaluated using the Intersection Capacity Utilization (ICU) method. The ICU methodology is intended for signalized intersection analyses and estimates the volume-to-capacity (*v/c*) relationship for an intersection based on the individual *v/c* ratios for key conflicting traffic movements.

The ICU numerical value represents the percent signal (green) time, and thus capacity, required by existing and/or future traffic. It should be noted that the ICU methodology assumes uniform traffic distribution per intersection approach lane and optimal signal timing. The overall intersection *v/c* ratio is subsequently assigned a Level of Service (LOS) value to describe intersection operations. Level of Service varies from LOS A (free flow) to LOS F (jammed condition). The six qualitative categories of Level of Service have been defined along with the corresponding ICU value range and are shown in ***Table 9-1***. A description of the ICU method and corresponding Level of Service is provided in ***Appendix B***.

TABLE 9-1

CITY OF EL MONTE

LEVEL OF SERVICE CRITERIA FOR SIGNALIZED INTERSECTIONS

Level of Service (LOS)	Intersection Capacity Utilization Value (V/C)	Level of Service Description
A	≤ 0.600	EXCELLENT. No vehicle waits longer than one red light, and no approach phase is fully used.
B	0.601 – 0.700	VERY GOOD. An occasional approach phase is fully utilized; many drivers begin to feel somewhat restricted within groups of vehicles.
C	0.701 – 0.800	GOOD. Occasionally drivers may have to wait through more than one red light; backups may develop behind turning vehicles.
D	0.801 – 0.900	FAIR. Delays may be substantial during portions of the rush hours, but enough lower volume periods occur to permit clearing of developing lines, preventing excessive backups.
E	0.901 – 1.000	POOR. Represents the most vehicles intersection approaches can accommodate; may be long lines of waiting vehicles through several signal cycles.
F	> 1.000	FAILURE. Backups from nearby locations or on cross streets may restrict or prevent movement of vehicles out of the intersection approaches. Potentially very long delays with continuously increasing queue lengths.

The *Highway Capacity Manual 2010* (HCM2010) methodology outlined in Chapter 19 for unsignalized/two-way stop-controlled (TWSC) and Chapter 20 for unsignalized/all-way stop-controlled (AWSC) study intersections was utilized for the analysis of the unsignalized intersections. The TWSC methodology estimates the average control delay for each minor-street movement (or shared movement) as well as major-street left-turns and determines the LOS for each constrained movement. It should be noted that LOS is not defined for the overall TWSC intersection because major-street movements with no delays typically result in a weighted average delay that is extremely low. Average control delay for any particular movement is a function of the capacity of the approach and the degree of saturation. The average control delay is measured in seconds per vehicle, and includes delay due to deceleration to a stop at the back of the queue from free-flow speed, move-up time within the queue, stopped delay at the front of the queue, and delay due to acceleration back to free-flow speed. A description of the HCM method and corresponding Level of Service also is provided in *Appendix B*. The six qualitative categories of Level of Service have been defined along with the corresponding HCM2010 control delay value range, as shown in ***Table 9-2***.

TABLE 9-2

CITY OF EL MONTE

LEVEL OF SERVICE CRITERIA FOR UNSIGNALIZED INTERSECTIONS

Level of Service (LOS)	Control Delay Value (sec/veh)	Level of Service Description
A	≤ 10.0	Little or no delay
B	> 10.0 and ≤ 15.0	Short traffic delays
C	> 15.0 and ≤ 25.0	Average traffic delays
D	> 25.0 and ≤ 35.0	Long traffic delays
E	> 35.0 and ≤ 50.0	Very long traffic delays
F	> 50.0	Severe congestion

9.1 Impact Criteria and Thresholds

The relative impact of the site-related traffic volumes to be generated by the proposed project during the weekday AM and PM peak hours and Saturday mid-day peak hour was evaluated based on analysis of existing and future operating conditions at the study intersections, without and with the proposed project. The previously discussed capacity analysis procedures were utilized to evaluate the future *v/c* relationships and service level characteristics at each study intersection.

As indicated in *Table 5-1*, a total of 31 of the 46 study intersections are located wholly within City of El Monte or are shared with adjacent jurisdictions. The remaining study intersections are either wholly located within the adjacent jurisdictions or shared with the City of El Monte as follows: City of Arcadia – 1 study intersection; City of Rosemead – 11 study intersections; City of San Gabriel – 1

study intersection; City of South El Monte – 3 study intersections; and City of Temple City – 4 study intersections. E ach study intersection was evaluated for potential traffic impacts using the significant traffic impact criteria utilized in the jurisdiction of the intersection (e.g., study intersections in the City of El Monte were evaluated for potential traffic impacts using the criteria of the City of El Monte, study intersections in the City of San Gabriel were evaluated for potential traffic impacts using the criteria of the City of San Gabriel, etc.). For those locations that are under shared jurisdiction, the intersections were analyzed based on t he methodology and significance criteria for the respective jurisdictions.

9.1.1 City of El Monte Impact Criteria

The City of El Monte utilizes the following threshold of significance for signalized intersections:

- A significant impact occurs when a proposed project increases traffic demand at a signalized study intersection by two percent or more of capacity (V/C / 0.02), causing or worsening LOS F (V/C > 1.00) for all intersections on major corridors, truck routes, commercial corridors at, or adjacent to freeway ramps (in this case, all intersections along Valley Boulevard, Lower Azusa Road, Garvey Avenue, Rosemead Boulevard, Baldwin Avenue, Santa Anita Avenue and at intersections at, or adjacent to freeway ramps (Temple City Boulevard – Olney Street/I-10 Westbound Ramps, Baldwin Avenue – Flair Drive/I-10 Eastbound Ramps).

- A significant impact occurs when a proposed project increases traffic demand at a signalized study intersection by two percent or more of capacity (V/C / 0.02), causing or worsening LOS E (V/C > 0.90) for all intersections which are not on m ajor corridors, truck routes, commercial corridors at or adjacent to freeway ramps.

The City of El Monte does not have established thresholds of significance for unsignalized intersections. However, based on coordination with City of El Monte staff, the following threshold of significance has been employed in the City's General Plan Traffic Impact Study and other traffic studies conducted in the City of El Monte:

- A significant impact occurs when a proposed Project increases traffic delay at an unsignalized intersection by two (2) percent or more of capacity, causing or worsening LOS E (control delay > 35 seconds) for those intersections.

9.1.2 City of Arcadia Impact Criteria

According to the City of Arcadia's methodology for calculating the level of impact due to traffic generated a proposed project, a significant transportation impact is determined based on t he following:

- A significant impact occurs if traffic generated by the project causes an intersection to worsen from LOS D or better to LOS E or worse, or

- For an intersection operating at LOS E or LOS F conditions, the addition of project traffic increases the *v/c* by 0.02 or greater.

The City's method requires mitigation of project traffic impacts whenever traffic generated by the proposed development exceeds the criteria above. For unsignalized study intersections, the HCM method is utilized to determine the Level of Service and the ICU method is utilized to determine the increase in the *v/c* ratio.

9.1.3 City of Rosemead Impact Criteria

Pursuant to the City of Rosemead's policy, the significance of the potential impacts of project-generated traffic at the City of Rosemead study intersections was identified using criteria set forth in the *City of Rosemead Transportation Impact Analysis Guidelines*[10]. A significant transportation impact for a project is considered significant if the project increases traffic demand by 2% of capacity ($v/c \geq 0.02$), causing LOS F ($v/c > 1.00$). If the facility is already at LOS F, a significant impact occurs when the project increases traffic demand by 2% of capacity ($v/c \geq 0.02$).

9.1.4 City of San Gabriel Impact Criteria

The significance of the potential impacts of project-generated traffic at the City of San Gabriel study intersections were identified using criteria set forth in the City of San Gabriel's *Traffic Study Guidelines for Development Projects in the City of San Gabriel*[11]. According to the City's Sliding Scale Method for calculating the level of impact due to traffic generated by the proposed project, a significant transportation impact is determined based on the criteria presented in ***Table 9-3***.

Table 9-3
CITY OF SAN GABRIEL
INTERSECTION IMPACT THRESHOLD CRITERIA

Final *v/c*	**Level of Service**	**Project Related Increase in *v/c***
0.600 - 0.700	A, B	equal to or greater than 0.06
> 0.700 - 0.800	C	equal to or greater than 0.04
> 0.800 - 0.900	D	equal to or greater than 0.02
> 0.900	E, F	equal to or greater than 0.01

9.1.5 City of South El Monte Impact Criteria

Pursuant to the City of South El Monte's policy, the significance of the potential impacts of project-generated traffic at the City of South El Monte study intersections was identified using criteria set

[10] *City of Rosemead Transportation Impact Analysis Guidelines,* City of Rosemead Engineering Department, February 2007.
[11] *Traffic Study Guidelines for Development Projects in the City of San Gabriel*, September 26, 2006.

forth in the *City of Rosemead Guidelines for Preparing Traffic Impact Analysis*[12]. Any study intersection that is operating at LOS A, B, C or D for any study scenario without project traffic in which the addition of project-related traffic causes the intersection to degrade to LOS E or F shall mitigate that impact so as to bring the intersection back to at least LOS D. Any study intersection that is operating at an LOS E or F for any study scenario without project traffic shall mitigate any project-related impacts so as to bring the intersection back to the established LOS prior to project-related traffic being added.

9.1.6 City of Temple City Impact Criteria

The significance of the potential impacts of project-generated traffic at the City of Temple City study intersections was identified using criteria set forth in the City's traffic impact study guidelines. According to the City's Sliding Scale Method for calculating the level of impact due to traffic generated by the proposed project, a significant transportation impact is determined based on the criteria presented in ***Table 9-4***.

Table 9–4
CITY OF TEMPLE CITY
INTERSECTION IMPACT THRESHOLD CRITERIA

Pre-Project *v/c*	**Level of Service**	**Project Related Increase in *v/c***
≥ 0.71 - 0.80	C	equal to or greater than 0.04
≥ 0.81 - 0.90	D	equal to or greater than 0.02
≥ 0.91 or more	E/F	equal to or greater than 0.01

It is noted that the City of Temple City requires analysis of slightly different set of traffic impact scenarios than the other jurisdictions included in this traffic analysis. These scenarios are consistent with those required through the County of Los Angeles. Level of Service calculations for the City of Temple City study intersections were analyzed for the following conditions:

(a) Existing conditions.

(b) Condition (a) with 0.82 percent (0.82%) ambient traffic growth through analysis years 2016 and 2019. Condition (a) with 0.52 percent (0.52%) ambient traffic growth through analysis year 2035.

(c) Condition (b) with completion and occupancy of the proposed project.

(d) Condition (c) with implementation of project mitigation measures, where necessary.

(e) Condition (d) with completion and occupancy of the related projects, without any potential mitigation measures from the related projects.

[12] *Guidelines for Preparing Traffic Impact Analysis,* City of South El Monte Engineering Department, May 2013.

The traffic volumes for each new condition were added to the volumes in the prior condition to determine the change in capacity utilization at the study intersections.

9.2 Traffic Impact Analysis Scenarios

Traffic impacts at the study intersections were analyzed for the following conditions as required by the City of El Monte:

[a] Existing conditions.

[b] Existing with project build-out (i.e., Phases I and II) conditions (for disclosure purposes).

[c] Condition [a] plus 0.82 percent (0.82%) annual ambient traffic growth through year 2016 and with completion and occupancy of the related projects (i.e., future year 2016 without project conditions).

[d] Condition [c] with completion and occupancy of the Phase I project (i.e., future year 2016 with Phase I project conditions).

[e] Condition [d] with implementation of project mitigation measures, where necessary.

[f] Condition [a] plus 0.82 percent (0.82%) annual ambient traffic growth through year 2019 and with completion and occupancy of the related projects (i.e., future year 2019 without project conditions).

[g] Condition [f] with completion and occupancy of the project at build-out (i.e., future year 2019 with Phases I and II project conditions).

[h] Condition [g] with implementation of project mitigation measures, where necessary.

[i] Condition [a] plus 0.52 percent (0.52%) annual ambient traffic growth through year 2035 and with completion and occupancy of the related projects (i.e., future year 2035 without project conditions).

[j] Condition [i] with completion and occupancy of the project at build-out (i.e., future year 2035 with Phases I and II project conditions).

[k] Condition [j] with implementation of project mitigation measures, where necessary.

The traffic volumes for each new condition were added to the volumes in the prior condition to determine the change in capacity utilization at the study intersections.

10.0 CITY OF EL MONTE TRAFFIC ANALYSIS

The existing year 2014 traffic impact analysis prepared for the study intersections using the ICU and HCM methodologies with application of the City of El Monte significant traffic impact criteria is summarized in ***Table 10–1***. The year 2016 traffic impact analysis prepared for the study intersections using the ICU and HCM methodologies with application of the City of El Monte significant traffic impact criteria is summarized in ***Table 10–2***. The year 2019 traffic impact analysis prepared for the study intersections using the ICU and HCM methodologies with application of the City of El Monte significant traffic impact criteria is summarized in ***Table 10–3***. The year 2035 traffic impact analysis prepared for the study intersections using the ICU and HCM methodologies with application of the City of El Monte significant traffic impact criteria is summarized in ***Table 10–4***. The ICU and HCM data worksheets for the analyzed intersections are contained in *Appendix B*.

10.1 Existing Conditions

10.1.1 Existing Conditions

As indicated in column [1] of *Table 10-1*, 19 of the 31 City of El Monte study intersections are operating at LOS D or better during the weekday AM peak hour, weekday PM peak hour and/or the Saturday mid-day peak hour under existing conditions. T he remaining study intersections are operating at LOS E or F during the weekday AM peak hour, weekday PM peak hour and/or the Saturday mid-day peak hour under existing conditions as shown in *Table 10-1*. As mentioned previously, the existing traffic volumes at the study intersections during the weekday AM peak hour, weekday PM peak hour and Saturday mid-day peak hour are provided in *Figures 6-1*, *6-2* and *6-3*, respectively.

10.1.2 Existing With Project Build-out Conditions

As shown in column [2] of *Table 10-1*, application of the City of El Monte's threshold criteria to the "Existing With Project" scenario indicates that the proposed project (i.e., build-out of Phases I and II) could be expected to create a s ignificant impact at 7 of the 31 City of El Monte study intersections during the weekday AM peak hour, weekday PM peak hour and/or the Saturday mid-day peak hour. The proposed project could be result in significant impacts at the following locations according to the City of El Monte's impact criteria during the peak hour(s) shown below:

- Int. No. 7: Rosemead Boulevard/Telstar Avenue — Weekday PM Peak Hour
- Int. No. 10: Aerojet Ave.-I-10 EB Ramps/Flair Drive — Weekday AM/PM Peak Hours
- Int. No. 11: Aerojet Avenue/Telstar Avenue — Weekday PM Peak Hour
Saturday Mid-Day Peak Hour
- Int. No. 13: Rio Hondo Avenue/Telstar Avenue — Weekday PM Peak Hour

Table 10-1
CITY OF EL MONTE LEVELS OF SERVICE SUMMARY
YEAR 2014 EXISTING CONDITIONS
WEEKDAY AM, PM AND SATURDAY MID-DAY PEAK HOURS

				[1]		[2]			
NO.	INTERSECTION	TRAFFIC CONTROL	PEAK HOUR	YEAR 2014 EXISTING DELAY or V/C	LOS [a]	YEAR 2014 EXISTING WITH PROJECT BUILDOUT DELAY or V/C	LOS [a]	CHANGE V/C [(2)-(1)]	SIGNIF. IMPACT [e]
6	Rosemead Boulevard (SR-164)/ I-10 EB Ramps	Yield Only	AM	[b]		[b]		[b]	
			PM	[b]		[b]		[b]	
			SAT	[b]		[b]		[b]	
7	Rosemead Boulevard (SR-164)/ Telstar Avenue	Signalized	AM	0.787	C	0.913	E	0.126	NO
			PM	0.814	D	1.055	F	0.241	YES
			SAT	0.656	B	0.963	E	0.307	NO
8	Rosemead Boulevard (SR-164)/ Whitmore Street	Signalized	AM	0.594	A	0.602	B	0.008	NO
			PM	0.752	C	0.767	C	0.015	NO
			SAT	0.544	A	0.572	A	0.028	NO
10	Aerojet Avenue- I-10 EB Ramps/Flair Drive [c]	All-Way Stop	AM	41.9	E	42.9	E	1.0	YES
			PM	14.5	B	37.1	E	22.6	YES
			SAT	7.9	A	19.6	C	11.7	NO
11	Aerojet Avenue/ Telstar Avenue [c]	All-Way Stop	AM	30.2	D	34.9	D	4.7	NO
			PM	43.1	E	>50.0	F	NA	YES
			SAT	9.1	A	51.0	F	NA	YES
12	Rio Hondo Avenue/ Flair Drive [d]	Two-Way Stop	AM	11.3	B	13.3	B	2.0	NO
			PM	10.6	B	18.2	C	7.6	NO
			SAT	8.6	A	14.2	B	5.6	NO
13	Rio Hondo Avenue/ Telstar Avenue [d]	Two-Way Stop	AM	13.3	B	17.9	C	4.6	NO
			PM	17.1	C	>50.0	F	NA	YES
			SAT	9.4	A	>50.0	F	NA	YES
14	Fletcher Avenue/ Flair Drive [d]	Two-Way Stop	AM	9.8	A	10.7	B	0.9	NO
			PM	9.5	A	12.6	B	3.1	NO
			SAT	8.5	A	11.8	B	3.3	NO
15	Fletcher Avenue/ Telstar Avenue [d]	Two-Way Stop	AM	12.4	B	12.6	B	0.2	NO
			PM	12.2	B	12.7	B	0.5	NO
			SAT	8.6	A	8.8	A	0.2	NO
16	Telstar Avenue/ Flair Drive [c]	All-Way Stop	AM	11.5	B	13.5	B	2.0	NO
			PM	10.6	B	34.6	D	24.0	NO
			SAT	7.9	A	26.6	D	18.7	NO
22	Baldwin Avenue/ Valley Boulevard	Signalized	AM	0.803	D	0.808	D	0.005	NO
			PM	0.818	D	0.842	D	0.024	NO
			SAT	0.689	B	0.704	C	0.015	NO
23	Baldwin Avenue/ Loftus Drive	Signalized	AM	1.164	F	1.246	F	0.082	YES
			PM	0.779	C	0.908	E	0.129	NO
			SAT	0.693	B	0.945	E	0.252	NO
24	Baldwin Avenue/ Flair Drive-I-10 EB Ramps [d]	Two-Way Stop	AM	>50.0	F	>50.0	F	NA	YES
			PM	>50.0	F	>50.0	F	NA	YES
			SAT	>50.0	F	>50.0	F	NA	YES
25	Merced Avenue/ Garvey Avenue	Signalized	AM	0.765	C	0.770	C	0.005	NO
			PM	0.712	C	0.721	C	0.009	NO
			SAT	0.685	B	0.700	B	0.015	NO
26	Santa Anita Avenue/ Lower Azusa Road	Signalized	AM	0.865	D	0.871	D	0.006	NO
			PM	0.904	E	0.913	E	0.009	NO
			SAT	0.885	D	0.902	E	0.017	NO
27	Santa Anita Avenue/ Valley Boulevard	Signalized	AM	0.916	E	0.928	E	0.012	NO
			PM	0.827	D	0.848	D	0.021	NO
			SAT	0.713	C	0.745	C	0.032	NO
28	Santa Anita Avenue/ Ramona Boulevard	Signalized	AM	0.572	A	0.574	A	0.002	NO
			PM	0.711	C	0.717	C	0.006	NO
			SAT	0.478	A	0.487	A	0.009	NO
29	Santa Anita Avenue/ Garvey Avenue	Signalized	AM	0.923	E	0.931	E	0.008	NO
			PM	0.840	D	0.854	D	0.014	NO
			SAT	0.833	D	0.853	D	0.020	NO
30	Tyler Avenue/ Valley Boulevard	Signalized	AM	0.630	B	0.636	B	0.006	NO
			PM	0.603	B	0.613	B	0.010	NO
			SAT	0.485	A	0.499	A	0.014	NO
31	Tyler Avenue/ Ramona Boulevard	Signalized	AM	0.467	A	0.468	A	0.001	NO
			PM	0.478	A	0.481	A	0.003	NO
			SAT	0.418	A	0.424	A	0.006	NO

Table 10-1 (Continued)
CITY OF EL MONTE LEVELS OF SERVICE SUMMARY
YEAR 2014 EXISTING CONDITIONS
WEEKDAY AM, PM AND SATURDAY MID-DAY PEAK HOURS

				[1]		[2]			
NO.	INTERSECTION	TRAFFIC CONTROL	PEAK HOUR	YEAR 2014 EXISTING DELAY or V/C	LOS [a]	YEAR 2014 EXISTING WITH PROJECT BUILDOUT DELAY or V/C	LOS [a]	CHANGE V/C [(2)-(1)]	SIGNIF. IMPACT [e]
32	Tyler Avenue/	Signalized	AM	0.602	B	0.609	B	0.007	NO
	Garvey Avenue		PM	1.008	F	1.022	F	0.014	NO
			SAT	0.711	C	0.735	C	0.024	NO
33	Valley Boulevard-Valley Mall/	5-Way	AM	0.582	A	0.588	A	0.006	NO
	Ramona Boulevard	Signal	PM	0.684	B	0.702	C	0.018	NO
			SAT	0.675	B	0.703	C	0.028	NO
34	Peck Road/	Signalized	AM	0.789	C	0.792	C	0.003	NO
	Lower Azusa Road		PM	0.908	E	0.914	E	0.006	NO
			SAT	0.757	C	0.766	C	0.009	NO
35	Peck Road/	Signalized	AM	0.621	B	0.627	B	0.006	NO
	Ramona Boulevard		PM	0.960	E	0.969	E	0.009	NO
			SAT	0.698	B	0.712	C	0.014	NO
36	Peck Road/	Signalized	AM	0.916	E	0.923	E	0.007	NO
	Valley Boulevard		PM	0.990	E	1.007	F	0.017	NO
			SAT	0.825	D	0.836	D	0.011	NO
37	Peck Road/	Signalized	AM	0.808	D	0.813	D	0.005	NO
	Garvey Avenue		PM	0.879	D	0.888	D	0.009	NO
			SAT	0.778	C	0.793	C	0.015	NO
38	Valley Boulevard/	Signalized	AM	0.609	B	0.614	B	0.005	NO
	Garvey Avenue		PM	0.795	C	0.809	D	0.014	NO
			SAT	0.696	B	0.712	C	0.016	NO
39	Roseglen Street-Durfee Avenue/	Signalized	AM	0.578	A	0.579	A	0.001	NO
	Lower Azusa Road		PM	0.634	B	0.636	B	0.002	NO
			SAT	0.488	A	0.492	A	0.004	NO
40	Durfee Avenue/	Two-Way	AM	46.9	E	49.1	E	2.2	YES
	Ramona Boulevard [d]	Stop	PM	30.3	D	31.2	D	0.9	NO
			SAT	19.8	C	20.3	C	0.5	NO
45	Baldwin Avenue/	Signalized	AM	0.874	D	0.878	D	0.004	NO
	Lower Azusa Road		PM	0.859	D	0.874	D	0.015	NO
			SAT	0.806	D	0.838	D	0.032	NO
46	Gilman Road/	Signalized	AM	0.607	B	0.608	B	0.001	NO
	Ramona Boulevard		PM	0.609	B	0.612	B	0.003	NO
			SAT	0.572	A	0.576	A	0.004	NO

[a] Level of Service (LOS) is based on the reported ICU value for signalized intersections and on the delay for unsignalized intersections. When LOS F is reached for an unsignalized intersection, the intersection becomes unstable and the calculated delay values become unreliable/unrealistic. Small increases in traffic volumes may result in very large increases in the calculated delay values which is not representative of actual conditions. Therefore, where calculated delay values are over 50.0 seconds (i.e., LOS F conditions by HCM definition), over-saturated conditions are expected and delay values of "> 50.0" seconds are reported in this table.

[b] As none of the subject approaches are required to stop, no intersection delay values are computed pursuant to the HCM methodologies.

[c] All-Way Stop-Controlled Intersection.

[d] Two-Way Stop-Controlled Intersection. Reported values represent the delays associated with the most constrained approach of the intersection.

[e] The City of El Monte intersection impact threshold criteria for signalized and unsignalized intersections are as follows:
For signalized intersections:
- Change in v/c >= 0.02 and causing or worsening LOS F (v/c >= 1.00) for intersections along major corridors, truck routes, commercial corridors or, at or adjacent to, freeway ramps
- Change in v/c >= 0.02 and causing or worsening LOS E (v/c >= 0.90) at all other intersections
For unsignalized intersections:
- Increase in traffic delay by two (2) percent or more of capacity, causing or worsening LOS E (control delay > 35 seconds)

Table 10-2
CITY OF EL MONTE LEVELS OF SERVICE SUMMARY
YEAR 2016 FUTURE CONDITIONS
WEEKDAY AM, PM AND SATURDAY MID-DAY PEAK HOURS

				[1]		[2]				[3]			
NO.	INTERSECTION	TRAFFIC CONTROL	PEAK HOUR	YEAR 2016 FUTURE PRE-PROJECT W/ AG & REL. PROJECTS DELAY or V/C	LOS [a]	YEAR 2016 FUTURE WITH PHASE I PROJECT DELAY or V/C	LOS [a]	CHANGE V/C [(2)-(1)]	SIGNIF. IMPACT [e]	YEAR 2016 FUTURE WITH PHASE I PROJECT MITIGATION DELAY or V/C	LOS [a]	CHANGE V/C [(3)-(1)]	MITIGATED [e]
6	Rosemead Boulevard (SR-164)/	Yield Only	AM	[b]		[b]		[b]		[b]		[b]	
	I-10 EB Ramps		PM	[b]		[b]		[b]		[b]		[b]	
			SAT	[b]		[b]		[b]		[b]		[b]	
7	Rosemead Boulevard (SR-164)/	Signalized	AM	0.678	B	0.731	C	0.053	NO	0.731	C	0.053	---
	Telstar Avenue		PM	0.825	D	0.957	E	0.132	NO	0.957	E	0.132	---
			SAT	0.621	B	0.852	D	0.231	NO	0.852	D	0.231	---
8	Rosemead Boulevard (SR-164)/	Signalized	AM	0.658	B	0.665	B	0.007	NO	0.665	B	0.007	---
	Whitmore Street		PM	0.834	D	0.847	D	0.013	NO	0.847	D	0.013	---
			SAT	0.574	A	0.598	A	0.024	NO	0.598	A	0.024	---
10	Aerojet Avenue-	All-Way	AM	42.3	E	43.4	E	1.1	YES	0.547	A	n/a	YES
	I-10 EB Ramps/Flair Drive [c]	Stop	PM	15.1	C	36.1	E	21.0	YES	0.703	C	n/a	YES
			SAT	8.0	A	18.4	C	10.4	NO	0.421	A	n/a	---
11	Aerojet Avenue/	All-Way	AM	33.7	D	35.5	E	1.8	YES	0.540	A	n/a	YES
	Telstar Avenue [c]	Stop	PM	46.2	E	>50.0	F	NA	YES	0.818	D	n/a	YES
			SAT	9.5	A	>50.0	F	NA	YES	0.700	B	n/a	YES
12	Rio Hondo Avenue/	Two-Way	AM	11.4	B	12.1	B	0.7	NO	12.1	B	0.7	---
	Flair Drive [d]	Stop	PM	10.7	B	16.3	C	5.6	NO	16.3	C	5.6	---
			SAT	8.6	A	13.0	B	4.4	NO	13.0	B	4.4	---
13	Rio Hondo Avenue/	Two-Way	AM	13.6	B	16.9	C	3.3	NO	0.417	A	n/a	---
	Telstar Avenue [d]	Stop	PM	17.8	C	>50.0	F	NA	YES	0.864	D	n/a	YES
			SAT	9.5	A	>50.0	F	NA	YES	0.557	A	n/a	YES
14	Fletcher Avenue/	Two-Way	AM	9.8	A	10.2	B	0.4	NO	10.2	B	0.4	---
	Flair Drive [d]	Stop	PM	9.5	A	12.1	B	2.6	NO	12.1	B	2.6	---
			SAT	8.5	A	11.4	B	2.9	NO	11.4	B	2.9	---
15	Fletcher Avenue/	Two-Way	AM	12.7	B	12.8	B	0.1	NO	12.8	B	0.1	---
	Telstar Avenue [d]	Stop	PM	12.5	B	12.9	B	0.4	NO	12.9	B	0.4	---
			SAT	8.6	A	8.8	A	0.2	NO	8.8	A	0.2	---
16	Telstar Avenue/	All-Way	AM	11.8	B	13.5	B	1.7	NO	13.5	B	1.7	---
	Flair Drive [c]	Stop	PM	11.0	B	31.2	D	20.2	NO	31.2	D	20.2	---
			SAT	7.9	A	21.4	C	13.5	NO	21.4	C	13.5	---
22	Baldwin Avenue/	Signalized	AM	0.951	E	0.955	E	0.004	NO	0.955	E	0.004	---
	Valley Boulevard		PM	0.948	E	0.966	E	0.018	NO	0.966	E	0.018	---
			SAT	0.781	C	0.793	C	0.012	NO	0.793	C	0.012	---
23	Baldwin Avenue/	Signalized	AM	1.237	F	1.307	F	0.070	YES	1.004	F	-0.233	NO [f]
	Loftus Drive		PM	0.893	D	0.984	E	0.091	NO	0.863	D	-0.030	---
			SAT	0.731	C	0.952	E	0.221	NO	0.826	D	0.095	---
24	Baldwin Avenue/	Two-Way	AM	>50.0	F	>50.0	F	NA	YES	0.808	D	n/a	YES
	Flair Drive-I-10 EB Ramps [d]	Stop	PM	>50.0	F	>50.0	F	NA	YES	1.109	F	n/a	YES
			SAT	>50.0	F	>50.0	F	NA	YES	0.903	E	n/a	YES
25	Merced Avenue/	Signalized	AM	0.802	D	0.806	D	0.004	NO	0.806	D	0.004	---
	Garvey Avenue		PM	0.754	C	0.761	C	0.007	NO	0.761	C	0.007	---
			SAT	0.732	C	0.744	C	0.012	NO	0.744	C	0.012	---
26	Santa Anita Avenue/	Signalized	AM	0.911	E	0.915	E	0.004	NO	0.915	E	0.004	---
	Lower Azusa Road		PM	0.973	E	0.978	E	0.005	NO	0.978	E	0.005	---
			SAT	0.940	E	0.955	E	0.015	NO	0.955	E	0.015	---
27	Santa Anita Avenue/	Signalized	AM	1.001	F	1.009	F	0.008	NO	1.009	F	0.008	---
	Valley Boulevard		PM	0.955	E	0.970	E	0.015	NO	0.970	E	0.015	---
			SAT	0.871	D	0.898	D	0.027	NO	0.898	D	0.027	---
28	Santa Anita Avenue/	Signalized	AM	0.684	B	0.686	B	0.002	NO	0.686	B	0.002	---
	Ramona Boulevard		PM	0.798	C	0.802	D	0.004	NO	0.802	D	0.004	---
			SAT	0.588	A	0.595	A	0.007	NO	0.595	A	0.007	---
29	Santa Anita Avenue/	Signalized	AM	0.984	E	0.990	E	0.006	NO	0.990	E	0.006	---
	Garvey Avenue		PM	0.928	E	0.936	E	0.008	NO	0.936	E	0.008	---
			SAT	0.920	E	0.934	E	0.014	NO	0.934	E	0.014	---
30	Tyler Avenue/	Signalized	AM	0.678	B	0.683	B	0.005	NO	0.683	B	0.005	---
	Valley Boulevard		PM	0.677	B	0.688	B	0.011	NO	0.688	B	0.011	---
			SAT	0.584	A	0.602	B	0.018	NO	0.602	B	0.018	---
31	Tyler Avenue/	Signalized	AM	0.494	A	0.495	A	0.001	NO	0.495	A	0.001	---
	Ramona Boulevard		PM	0.531	A	0.534	A	0.003	NO	0.534	A	0.003	---
			SAT	0.471	A	0.477	A	0.006	NO	0.477	A	0.006	---

Table 10-4 (Continued)
CITY OF EL MONTE LEVELS OF SERVICE SUMMARY
YEAR 2035 FUTURE CONDITIONS
WEEKDAY AM, PM AND SATURDAY MID-DAY PEAK HOURS

				[1]		[2]				[3]			
NO.	INTERSECTION	TRAFFIC CONTROL	PEAK HOUR	YEAR 2035 FUTURE PRE-PROJECT W/ AG & REL. PROJECTS DELAY or V/C	LOS [a]	YEAR 2035 FUTURE WITH PROJECT BUILD-OUT DELAY or V/C	LOS [a]	CHANGE V/C [(2)-(1)]	SIGNIF. IMPACT [e]	YEAR 2035 FUTURE WITH PROJECT MITIGATION DELAY or V/C	LOS [a]	CHANGE V/C [(3)-(1)]	MITIGATED [e]
32	Tyler Avenue/	Signalized	AM	0.686	B	0.693	B	0.007	NO	0.693	B	0.007	---
	Garvey Avenue		PM	1.151	F	1.164	F	0.013	NO	1.164	F	0.013	---
			SAT	0.822	D	0.846	D	0.024	NO	0.846	D	0.024	---
33	Valley Boulevard-Valley Mall/	5-Way	AM	0.656	B	0.662	B	0.006	NO	0.662	B	0.006	---
	Ramona Boulevard	Signal	PM	0.814	D	0.835	D	0.021	NO	0.835	D	0.021	---
			SAT	0.816	D	0.848	D	0.032	NO	0.848	D	0.032	---
34	Peck Road/	Signalized	AM	0.885	D	0.887	D	0.002	NO	0.887	D	0.002	---
	Lower Azusa Road		PM	1.028	F	1.033	F	0.005	NO	1.033	F	0.005	---
			SAT	0.853	D	0.862	D	0.009	NO	0.862	D	0.009	---
35	Peck Road/	Signalized	AM	0.704	C	0.709	C	0.005	NO	0.709	C	0.005	---
	Ramona Boulevard		PM	1.084	F	1.092	F	0.008	NO	1.092	F	0.008	---
			SAT	0.798	C	0.812	D	0.014	NO	0.812	D	0.014	---
36	Peck Road/	Signalized	AM	1.027	F	1.034	F	0.007	NO	1.034	F	0.007	---
	Valley Boulevard		PM	1.127	F	1.144	F	0.017	NO	1.144	F	0.017	---
			SAT	0.949	E	0.959	E	0.010	NO	0.959	E	0.010	---
37	Peck Road/	Signalized	AM	0.913	E	0.918	E	0.005	NO	0.918	E	0.005	---
	Garvey Avenue		PM	0.988	E	0.997	E	0.009	NO	0.997	E	0.009	---
			SAT	0.871	D	0.887	D	0.016	NO	0.887	D	0.016	---
38	Valley Boulevard/	Signalized	AM	0.693	B	0.698	B	0.005	NO	0.698	B	0.005	---
	Garvey Avenue		PM	0.910	E	0.924	E	0.014	NO	0.924	E	0.014	---
			SAT	0.801	D	0.817	D	0.016	NO	0.817	D	0.016	---
39	Roseglen Street-Durfee Avenue/	Signalized	AM	0.643	B	0.644	B	0.001	NO	0.644	B	0.001	---
	Lower Azusa Road		PM	0.708	C	0.711	C	0.003	NO	0.711	C	0.003	---
			SAT	0.539	A	0.543	A	0.004	NO	0.543	A	0.004	---
40	Durfee Avenue/	Two-Way	AM	>50.0	F	>50.0	F	NA	YES	22.4	C	NA	YES
	Ramona Boulevard [d]	Stop	PM	>50.0	F	>50.0	F	NA	YES	25.8	D	NA	YES
			SAT	28.1	D	29.0	D	0.9	NO	17.3	C	-10.8	---
45	Baldwin Avenue/	Signalized	AM	0.999	E	1.004	F	0.005	NO	1.004	F	0.005	---
	Lower Azusa Road		PM	1.009	F	1.018	F	0.009	NO	1.018	F	0.009	---
			SAT	0.945	E	0.976	E	0.031	NO	0.976	E	0.031	---
46	Gilman Road/	Signalized	AM	0.670	B	0.671	B	0.001	NO	0.671	B	0.001	---
	Ramona Boulevard		PM	0.680	B	0.683	B	0.003	NO	0.683	B	0.003	---
			SAT	0.641	B	0.645	B	0.004	NO	0.645	B	0.004	---

[a] Level of Service (LOS) is based on the reported ICU value for signalized intersections and on the delay for unsignalized intersections. When LOS F is reached for an unsignalized intersection, the intersection becomes unstable and the calculated delay values become unreliable/unrealistic. Small increases in traffic volumes may result in very large increases in the calculated delay values which is not representative of actual conditions. Therefore, where calculated delay values are over 50.0 seconds (i.e., LOS F conditions by HCM definition), over-saturated conditions are expected and delay values of "> 50.0" seconds are reported in this table.

[b] As none of the subject approaches are required to stop, no intersection delay values are computed pursuant to the HCM methodologies.

[c] All-Way Stop-Controlled Intersection.

[d] Two-Way Stop-Controlled Intersection. Reported values represent the delays associated with the most constrained approach of the intersection.

[e] The City of El Monte intersection impact threshold criteria for signalized and unsignalized intersections are as follows:
For signalized intersections:
- Change in v/c >= 0.02 and causing or worsening LOS F (v/c >= 1.00) for intersections along major corridors, truck routes, commercial corridors or, at or adjacent to, freeway ramps
- Change in v/c >= 0.02 and causing or worsening LOS E (v/c >= 0.90) at all other intersections
For unsignalized intersections:
- Increase in traffic delay by two (2) percent or more of capacity, causing or worsening LOS E (control delay > 35 seconds)

[f] While from a calculation standpoint the mitigation measure reduces the impact to less than significant levels, it is conservatively assumed to be significant and unavoidable due to the fair share contribution to the General Plan improvement.

Table 10-2 (Continued)
CITY OF EL MONTE LEVELS OF SERVICE SUMMARY
YEAR 2016 FUTURE CONDITIONS
WEEKDAY AM, PM AND SATURDAY MID-DAY PEAK HOURS

				[1]		[2]				[3]			
NO.	INTERSECTION	TRAFFIC CONTROL	PEAK HOUR	YEAR 2016 FUTURE PRE-PROJECT W/ AG & REL. PROJECTS DELAY or V/C	LOS [a]	YEAR 2016 FUTURE WITH PHASE I PROJECT DELAY or V/C	LOS [a]	CHANGE V/C [(2)-(1)]	SIGNIF. IMPACT [e]	YEAR 2016 FUTURE WITH PHASE I PROJECT MITIGATION DELAY or V/C	LOS [a]	CHANGE V/C [(3)-(1)]	MITIGATED [e]
32	Tyler Avenue/	Signalized	AM	0.637	B	0.640	B	0.003	NO	0.640	B	0.003	---
	Garvey Avenue		PM	1.061	F	1.072	F	0.011	NO	1.072	F	0.011	---
			SAT	0.762	C	0.783	C	0.021	NO	0.783	C	0.021	---
33	Valley Boulevard-Valley Mall/	5-Way	AM	0.609	B	0.613	B	0.004	NO	0.613	B	0.004	---
	Ramona Boulevard	Signal	PM	0.757	C	0.773	C	0.016	NO	0.773	C	0.016	---
			SAT	0.760	C	0.788	C	0.028	NO	0.788	C	0.028	---
34	Peck Road/	Signalized	AM	0.817	D	0.819	D	0.002	NO	0.819	D	0.002	---
	Lower Azusa Road		PM	0.948	E	0.953	E	0.005	NO	0.953	E	0.005	---
			SAT	0.788	C	0.797	C	0.009	NO	0.797	C	0.009	---
35	Peck Road/	Signalized	AM	0.653	B	0.656	B	0.003	NO	0.656	B	0.003	---
	Ramona Boulevard		PM	0.999	E	1.006	F	0.007	NO	1.006	F	0.007	---
			SAT	0.739	C	0.751	C	0.012	NO	0.751	C	0.012	---
36	Peck Road/	Signalized	AM	0.946	E	0.952	E	0.006	NO	0.952	E	0.006	---
	Valley Boulevard		PM	1.039	F	1.052	F	0.013	NO	1.052	F	0.013	---
			SAT	0.877	D	0.886	D	0.009	NO	0.886	D	0.009	---
37	Peck Road/	Signalized	AM	0.844	D	0.847	D	0.003	NO	0.847	D	0.003	---
	Garvey Avenue		PM	0.911	E	0.918	E	0.007	NO	0.918	E	0.007	---
			SAT	0.805	D	0.818	D	0.013	NO	0.818	D	0.013	---
38	Valley Boulevard/	Signalized	AM	0.643	B	0.646	B	0.003	NO	0.646	B	0.003	---
	Garvey Avenue		PM	0.841	D	0.851	D	0.010	NO	0.851	D	0.010	---
			SAT	0.742	C	0.755	C	0.013	NO	0.755	C	0.013	---
39	Roseglen Street-Durfee Avenue/	Signalized	AM	0.596	A	0.597	A	0.001	NO	0.597	A	0.001	---
	Lower Azusa Road		PM	0.656	B	0.658	B	0.002	NO	0.658	B	0.002	---
			SAT	0.501	A	0.504	A	0.003	NO	0.504	A	0.003	---
40	Durfee Avenue/	Two-Way	AM	>50.0	F	>50.0	F	NA	YES	18.8	C	NA	YES
	Ramona Boulevard [d]	Stop	PM	37.7	E	38.6	E	0.9	NO	21.2	C	-16.5	---
			SAT	22.2	C	22.7	C	0.5	NO	15.8	C	-6.4	---
45	Baldwin Avenue/	Signalized	AM	0.923	E	0.924	E	0.001	NO	0.924	E	0.001	---
	Lower Azusa Road		PM	0.934	E	0.937	E	0.003	NO	0.937	E	0.003	---
			SAT	0.875	D	0.901	E	0.026	NO	0.901	E	0.026	---
46	Gilman Road/	Signalized	AM	0.620	B	0.621	B	0.001	NO	0.621	B	0.001	---
	Ramona Boulevard		PM	0.630	B	0.632	B	0.002	NO	0.632	B	0.002	---
			SAT	0.594	A	0.597	A	0.003	NO	0.597	A	0.003	---

[a] Level of Service (LOS) is based on the reported ICU value for signalized intersections and on the delay for unsignalized intersections. When LOS F is reached for an unsignalized intersection, the intersection becomes unstable and the calculated delay values become unreliable/unrealistic. Small increases in traffic volumes may result in very large increases in the calculated delay values which is not representative of actual conditions. Therefore, where calculated delay values are over 50.0 seconds (i.e., LOS F conditions by HCM definition), over-saturated conditions are expected and delay values of "> 50.0" seconds are reported in this table.

[b] As none of the subject approaches are required to stop, no intersection delay values are computed pursuant to the HCM methodologies.

[c] All-Way Stop-Controlled Intersection.

[d] Two-Way Stop-Controlled Intersection. Reported values represent the delays associated with the most constrained approach of the intersection.

[e] The City of El Monte intersection impact threshold criteria for signalized and unsignalized intersections are as follows:
For signalized intersections:
- Change in v/c >= 0.02 and causing or worsening LOS F (v/c >= 1.00) for intersections along major corridors, truck routes, commercial corridors or, at or adjacent to, freeway ramps
- Change in v/c >= 0.02 and causing or worsening LOS E (v/c >= 0.90) at all other intersections
For unsignalized intersections:
- Increase in traffic delay by two (2) percent or more of capacity, causing or worsening LOS E (control delay > 35 seconds)

[f] While from a calculation standpoint the mitigation measure reduces the impact to less than significant levels, it is conservatively assumed to be significant and unavoidable due to the fair share contribution to the General Plan improvement.

Table 10-3
CITY OF EL MONTE LEVELS OF SERVICE SUMMARY
YEAR 2019 FUTURE CONDITIONS
WEEKDAY AM, PM AND SATURDAY MID-DAY PEAK HOURS

				[1]		[2]				[3]			
NO.	INTERSECTION	TRAFFIC CONTROL	PEAK HOUR	YEAR 2019 FUTURE PRE-PROJECT W/ AG & REL. PROJECTS DELAY or V/C	LOS [a]	YEAR 2019 FUTURE WITH PROJECT BUILDOUT DELAY or V/C	LOS [a]	CHANGE V/C [(2)-(1)]	SIGNIF. IMPACT [e]	YEAR 2019 FUTURE WITH PROJECT BUILDOUT MITIGATION DELAY or V/C	LOS [a]	CHANGE V/C [(3)-(1)]	MITIGATED [e]
6	Rosemead Boulevard (SR-164)/	Yield Only	AM	[b]		[b]		[b]		[b]		[b]	
	I-10 EB Ramps		PM	[b]		[b]		[b]		[b]		[b]	
			SAT	[b]		[b]		[b]		[b]		[b]	
7	Rosemead Boulevard (SR-164)/	Signalized	AM	0.691	B	0.770	C	0.079	NO	0.720	C	0.029	---
	Telstar Avenue		PM	0.842	D	1.002	F	0.160	YES	0.952	E	0.110	YES
			SAT	0.634	B	0.890	D	0.256	NO	0.840	D	0.206	---
8	Rosemead Boulevard (SR-164)/	Signalized	AM	0.670	B	0.679	B	0.009	NO	0.679	B	0.009	---
	Whitmore Street		PM	0.851	D	0.866	D	0.015	NO	0.866	D	0.015	---
			SAT	0.586	A	0.613	B	0.027	NO	0.613	B	0.027	---
10	Aerojet Avenue-	All-Way	AM	42.5	E	43.4	E	0.9	NO	0.560	A	n/a	---
	I-10 EB Ramps/Flair Drive [c]	Stop	PM	15.9	C	49.8	E	33.9	YES	0.727	C	n/a	YES
			SAT	8.0	A	21.2	C	13.2	NO	0.433	A	n/a	---
11	Aerojet Avenue/	All-Way	AM	34.0	D	38.6	E	4.6	YES	0.567	A	n/a	YES
	Telstar Avenue [c]	Stop	PM	48.2	E	>50.0	F	NA	YES	0.846	D	n/a	YES
			SAT	9.5	A	>50.0	F	NA	YES	0.739	C	n/a	YES
12	Rio Hondo Avenue/	Two-Way	AM	11.5	B	13.7	B	2.2	NO	13.7	B	2.2	---
	Flair Drive [d]	Stop	PM	10.8	B	18.8	C	8.0	NO	18.8	C	8.0	---
			SAT	8.6	A	14.2	B	5.6	NO	14.2	B	5.6	---
13	Rio Hondo Avenue/	Two-Way	AM	13.9	B	19.4	C	5.5	NO	0.436	A	n/a	---
	Telstar Avenue [d]	Stop	PM	18.4	C	>50.0	F	NA	YES	0.952	E	n/a	YES
			SAT	9.5	A	>50.0	F	NA	YES	0.597	A	n/a	YES
14	Fletcher Avenue/	Two-Way	AM	9.8	A	10.8	B	1.0	NO	10.8	B	1.0	---
	Flair Drive [d]	Stop	PM	9.6	A	12.7	B	3.1	NO	12.7	B	3.1	---
			SAT	8.5	A	11.8	B	3.3	NO	11.8	B	3.3	---
15	Fletcher Avenue/	Two-Way	AM	12.9	B	13.1	B	0.2	NO	13.1	B	0.2	---
	Telstar Avenue [d]	Stop	PM	12.6	B	13.3	B	0.7	NO	13.3	B	0.7	---
			SAT	8.6	A	8.8	A	0.2	NO	8.8	A	0.2	---
16	Telstar Avenue/	All-Way	AM	12.1	B	14.3	B	2.2	NO	14.4	B	2.3	---
	Flair Drive [c]	Stop	PM	11.2	B	35.2	E	24.0	YES	20.0	C	8.8	YES
			SAT	7.9	A	28.3	D	20.4	NO	18.9	C	11.0	---
22	Baldwin Avenue/	Signalized	AM	0.969	E	0.973	E	0.004	NO	0.973	E	0.004	---
	Valley Boulevard		PM	0.966	E	0.990	E	0.024	NO	0.990	E	0.024	---
			SAT	0.796	C	0.810	D	0.014	NO	0.810	D	0.014	---
23	Baldwin Avenue/	Signalized	AM	1.254	F	1.335	F	0.081	YES	1.025	F	-0.229	NO [f]
	Loftus Drive		PM	0.904	E	1.035	F	0.131	YES	0.899	D	-0.005	NO [f]
			SAT	0.740	C	0.992	E	0.252	NO	0.854	D	0.114	---
24	Baldwin Avenue/	Two-Way	AM	>50.0	F	>50.0	F	NA	YES	0.855	D	n/a	YES
	Flair Drive-I-10 EB Ramps [d]	Stop	PM	>50.0	F	>50.0	F	NA	YES	1.141	F	n/a	YES
			SAT	>50.0	F	>50.0	F	NA	YES	0.932	E	n/a	YES
25	Merced Avenue/	Signalized	AM	0.818	D	0.823	D	0.005	NO	0.823	D	0.005	---
	Garvey Avenue		PM	0.769	C	0.778	C	0.009	NO	0.778	C	0.009	---
			SAT	0.747	C	0.761	C	0.014	NO	0.761	C	0.014	---
26	Santa Anita Avenue/	Signalized	AM	0.931	E	0.937	E	0.006	NO	0.937	E	0.006	---
	Lower Azusa Road		PM	0.993	E	1.000	E	0.007	NO	1.000	E	0.007	---
			SAT	0.960	E	0.977	E	0.017	NO	0.977	E	0.017	---
27	Santa Anita Avenue/	Signalized	AM	1.021	F	1.033	F	0.012	NO	1.033	F	0.012	---
	Valley Boulevard		PM	0.974	E	0.994	E	0.020	NO	0.994	E	0.020	---
			SAT	0.886	D	0.918	E	0.032	NO	0.918	E	0.032	---
28	Santa Anita Avenue/	Signalized	AM	0.696	B	0.698	B	0.002	NO	0.698	B	0.002	---
	Ramona Boulevard		PM	0.813	D	0.819	D	0.006	NO	0.819	D	0.006	---
			SAT	0.597	A	0.605	B	0.008	NO	0.605	B	0.008	---
29	Santa Anita Avenue/	Signalized	AM	1.005	F	1.013	F	0.008	NO	1.013	F	0.008	---
	Garvey Avenue		PM	0.946	E	0.960	E	0.014	NO	0.960	E	0.014	---
			SAT	0.938	E	0.957	E	0.019	NO	0.957	E	0.019	---
30	Tyler Avenue/	Signalized	AM	0.691	B	0.697	B	0.006	NO	0.697	B	0.006	---
	Valley Boulevard		PM	0.689	B	0.701	C	0.012	NO	0.701	C	0.012	---
			SAT	0.593	A	0.613	B	0.020	NO	0.613	B	0.020	---
31	Tyler Avenue/	Signalized	AM	0.503	A	0.504	A	0.001	NO	0.504	A	0.001	---
	Ramona Boulevard		PM	0.540	A	0.544	A	0.004	NO	0.544	A	0.004	---
			SAT	0.479	A	0.486	A	0.007	NO	0.486	A	0.007	---

Table 10-3 (Continued)
CITY OF EL MONTE LEVELS OF SERVICE SUMMARY
YEAR 2019 FUTURE CONDITIONS
WEEKDAY AM, PM AND SATURDAY MID-DAY PEAK HOURS

				[1]		[2]				[3]			
NO.	INTERSECTION	TRAFFIC CONTROL	PEAK HOUR	YEAR 2019 FUTURE PRE-PROJECT W/ AG & REL. PROJECTS DELAY or V/C	LOS [a]	YEAR 2019 FUTURE WITH PROJECT BUILD-OUT DELAY or V/C	LOS [a]	CHANGE V/C [(2)-(1)]	SIGNIF. IMPACT [e]	YEAR 2019 FUTURE WITH PROJECT MITIGATION DELAY or V/C	LOS [a]	CHANGE V/C [(3)-(1)]	MITIGATED [e]
32	Tyler Avenue/	Signalized	AM	0.649	B	0.657	B	0.008	NO	0.657	B	0.008	---
	Garvey Avenue		PM	1.084	F	1.097	F	0.013	NO	1.097	F	0.013	---
			SAT	0.777	C	0.801	D	0.024	NO	0.801	D	0.024	---
33	Valley Boulevard-Valley Mall/	5-Way	AM	0.621	B	0.627	B	0.006	NO	0.627	B	0.006	---
	Ramona Boulevard	Signal	PM	0.772	C	0.792	C	0.020	NO	0.792	C	0.020	---
			SAT	0.774	C	0.806	D	0.032	NO	0.806	D	0.032	---
34	Peck Road/	Signalized	AM	0.834	D	0.837	D	0.003	NO	0.837	D	0.003	---
	Lower Azusa Road		PM	0.968	E	0.974	E	0.006	NO	0.974	E	0.006	---
			SAT	0.805	D	0.814	D	0.009	NO	0.814	D	0.009	---
35	Peck Road/	Signalized	AM	0.666	B	0.671	B	0.005	NO	0.671	B	0.005	---
	Ramona Boulevard		PM	1.021	F	1.029	F	0.008	NO	1.029	F	0.008	---
			SAT	0.754	C	0.768	C	0.014	NO	0.768	C	0.014	---
36	Peck Road/	Signalized	AM	0.967	E	0.974	E	0.007	NO	0.974	E	0.007	---
	Valley Boulevard		PM	1.061	F	1.078	F	0.017	NO	1.078	F	0.017	---
			SAT	0.896	D	0.906	E	0.010	NO	0.906	E	0.010	---
37	Peck Road/	Signalized	AM	0.861	D	0.866	D	0.005	NO	0.866	D	0.005	---
	Garvey Avenue		PM	0.931	E	0.940	E	0.009	NO	0.940	E	0.009	---
			SAT	0.822	D	0.837	D	0.015	NO	0.837	D	0.015	---
38	Valley Boulevard/	Signalized	AM	0.656	B	0.661	B	0.005	NO	0.661	B	0.005	---
	Garvey Avenue		PM	0.859	D	0.873	D	0.014	NO	0.873	D	0.014	---
			SAT	0.757	C	0.773	C	0.016	NO	0.773	C	0.016	---
39	Roseglen Street-Durfee Avenue/	Signalized	AM	0.608	B	0.609	B	0.001	NO	0.609	B	0.001	---
	Lower Azusa Road		PM	0.669	B	0.672	B	0.003	NO	0.672	B	0.003	---
			SAT	0.511	A	0.515	A	0.004	NO	0.515	A	0.004	---
40	Durfee Avenue/	Two-Way	AM	>50.0	F	>50.0	F	NA	YES	19.5	C	NA	YES
	Ramona Boulevard [d]	Stop	PM	41.7	E	42.7	E	1.0	YES	22.2	C	-19.5	YES
			SAT	23.4	C	24.3	C	0.9	NO	16.2	C	-7.2	---
45	Baldwin Avenue/	Signalized	AM	0.942	E	0.947	E	0.005	NO	0.947	E	0.005	---
	Lower Azusa Road		PM	0.953	E	0.963	E	0.010	NO	0.963	E	0.010	---
			SAT	0.893	D	0.925	E	0.032	NO	0.925	E	0.032	---
46	Gilman Road/	Signalized	AM	0.633	B	0.634	B	0.001	NO	0.634	B	0.001	---
	Ramona Boulevard		PM	0.642	B	0.645	B	0.003	NO	0.645	B	0.003	---
			SAT	0.606	B	0.610	B	0.004	NO	0.610	B	0.004	---

[a] Level of Service (LOS) is based on the reported ICU value for signalized intersections and on the delay for unsignalized intersections. When LOS F is reached for an unsignalized intersection, the intersection becomes unstable and the calculated delay values become unreliable/unrealistic. Small increases in traffic volumes may result in very large increases in the calculated delay values which is not representative of actual conditions. Therefore, where calculated delay values are over 50.0 seconds (i.e., LOS F conditions by HCM definition), over-saturated conditions are expected and delay values of "> 50.0" seconds are reported in this table.

[b] As none of the subject approaches are required to stop, no intersection delay values are computed pursuant to the HCM methodologies.

[c] All-Way Stop-Controlled Intersection.

[d] Two-Way Stop-Controlled Intersection. Reported values represent the delays associated with the most constrained approach of the intersection.

[e] The City of El Monte intersection impact threshold criteria for signalized and unsignalized intersections are as follows:
For signalized intersections:
- Change in v/c >= 0.02 and causing or worsening LOS F (v/c >= 1.00) for intersections along major corridors, truck routes, commercial corridors or, at or adjacent to, freeway ramps
- Change in v/c >= 0.02 and causing or worsening LOS E (v/c >= 0.90) at all other intersections
For unsignalized intersections:
- Increase in traffic delay by two (2) percent or more of capacity, causing or worsening LOS E (control delay > 35 seconds)

[f] While from a calculation standpoint the mitigation measure reduces the impact to less than significant levels, it is conservatively assumed to be significant and unavoidable due to the fair share contribution to the General Plan improvement.

Table 10-4
CITY OF EL MONTE LEVELS OF SERVICE SUMMARY
YEAR 2035 FUTURE CONDITIONS
WEEKDAY AM, PM AND SATURDAY MID-DAY PEAK HOURS

				[1]		[2]				[3]			
NO.	INTERSECTION	TRAFFIC CONTROL	PEAK HOUR	YEAR 2035 FUTURE PRE-PROJECT W/ AG & REL. PROJECTS DELAY or V/C	LOS [a]	YEAR 2035 FUTURE WITH PROJECT BUILDOUT DELAY or V/C	LOS [a]	CHANGE V/C [(2)-(1)]	SIGNIF. IMPACT [e]	YEAR 2035 FUTURE WITH PROJECT BUILDOUT MITIGATION DELAY or V/C	LOS [a]	CHANGE V/C [(3)-(1)]	MITIGATED [e]
6	Rosemead Boulevard (SR-164)/ I-10 EB Ramps	Yield Only	AM	[b]		[b]		[b]		[b]		[b]	
			PM	[b]		[b]		[b]		[b]		[b]	
			SAT	[b]		[b]		[b]		[b]		[b]	
7	Rosemead Boulevard (SR-164)/ Telstar Avenue	Signalized	AM	0.731	C	0.809	D	0.078	NO	0.721	C	-0.010	---
			PM	0.892	D	1.051	F	0.159	YES	0.892	D	0.000	YES
			SAT	0.670	B	0.926	E	0.256	NO	0.767	C	0.097	---
8	Rosemead Boulevard (SR-164)/ Whitmore Street	Signalized	AM	0.707	C	0.715	C	0.008	NO	0.715	C	0.008	---
			PM	0.898	D	0.914	E	0.016	NO	0.914	E	0.016	---
			SAT	0.618	B	0.646	B	0.028	NO	0.646	B	0.028	---
10	Aerojet Avenue- I-10 EB Ramps/Flair Drive [c]	All-Way Stop	AM	43.1	E	44.0	E	0.9	NO	0.588	A	n/a	---
			PM	19.1	C	>50.0	F	NA	YES	0.760	C	n/a	YES
			SAT	8.1	A	22.2	C	14.1	NO	0.440	A	n/a	---
11	Aerojet Avenue/ Telstar Avenue [c]	All-Way Stop	AM	34.8	D	41.1	E	6.3	YES	0.595	A	n/a	YES
			PM	>50.0	F	>50.0	F	NA	YES	0.884	D	n/a	YES
			SAT	9.8	A	>50.0	F	NA	YES	0.747	C	n/a	YES
12	Rio Hondo Avenue/ Flair Drive [d]	Two-Way Stop	AM	11.8	B	14.1	B	2.3	NO	14.1	B	2.3	---
			PM	11.0	B	19.7	C	8.7	NO	19.7	C	8.7	---
			SAT	8.6	A	14.2	B	5.6	NO	14.2	B	5.6	---
13	Rio Hondo Avenue/ Telstar Avenue [d]	Two-Way Stop	AM	14.7	B	22.0	C	7.3	NO	0.451	A	n/a	---
			PM	20.2	C	>50.0	F	NA	YES	0.972	E	n/a	YES
			SAT	9.6	A	>50.0	F	NA	YES	0.600	A	n/a	YES
14	Fletcher Avenue/ Flair Drive [d]	Two-Way Stop	AM	10.0	A	11.0	B	1.0	NO	11.0	B	1.0	---
			PM	9.7	A	13.1	B	3.4	NO	13.1	B	3.4	---
			SAT	8.5	A	11.9	B	3.4	NO	11.9	B	3.4	---
15	Fletcher Avenue/ Telstar Avenue [d]	Two-Way Stop	AM	13.4	B	13.7	B	0.3	NO	13.7	B	0.3	---
			PM	13.2	B	13.7	B	0.5	NO	13.7	B	0.5	---
			SAT	8.6	A	8.8	A	0.2	NO	8.8	A	0.2	---
16	Telstar Avenue/ Flair Drive [c]	All-Way Stop	AM	13.0	B	15.6	C	2.6	NO	15.7	C	2.7	---
			PM	11.9	B	36.0	E	24.1	YES	21.9	C	10.0	YES
			SAT	7.9	A	29.6	D	21.7	NO	19.4	C	11.5	---
22	Baldwin Avenue/ Valley Boulevard	Signalized	AM	1.020	F	1.025	F	0.005	NO	1.025	F	0.005	---
			PM	1.019	F	1.043	F	0.024	YES	0.892	D	-0.127	YES
			SAT	0.839	D	0.854	D	0.015	NO	0.854	D	0.015	---
23	Baldwin Avenue/ Loftus Drive	Signalized	AM	1.348	F	1.429	F	0.081	YES	1.095	F	-0.253	NO [f]
			PM	0.964	E	1.092	F	0.128	YES	0.956	E	-0.008	NO [f]
			SAT	0.793	C	1.045	F	0.252	YES	0.901	E	0.108	NO [f]
24	Baldwin Avenue/ Flair Drive-I-10 EB Ramps [d]	Two-Way Stop	AM	>50.0	F	>50.0	F	NA	YES	0.899	D	n/a	YES
			PM	>50.0	F	>50.0	F	NA	YES	1.203	F	n/a	YES
			SAT	>50.0	F	>50.0	F	NA	YES	0.974	E	n/a	YES
25	Merced Avenue/ Garvey Avenue	Signalized	AM	0.867	D	0.872	D	0.005	NO	0.872	D	0.005	---
			PM	0.814	D	0.823	D	0.009	NO	0.823	D	0.009	---
			SAT	0.790	C	0.804	D	0.014	NO	0.804	D	0.014	---
26	Santa Anita Avenue/ Lower Azusa Road	Signalized	AM	0.987	E	0.993	E	0.006	NO	0.993	E	0.006	---
			PM	1.052	F	1.059	F	0.007	NO	1.059	F	0.007	---
			SAT	1.017	F	1.035	F	0.018	NO	1.035	F	0.018	---
27	Santa Anita Avenue/ Valley Boulevard	Signalized	AM	1.081	F	1.093	F	0.012	NO	1.050	F	-0.031	---
			PM	1.027	F	1.048	F	0.021	YES	1.012	F	-0.015	YES
			SAT	0.931	E	0.963	E	0.032	NO	0.911	E	-0.020	---
28	Santa Anita Avenue/ Ramona Boulevard	Signalized	AM	0.731	C	0.733	C	0.002	NO	0.733	C	0.002	---
			PM	0.858	D	0.864	D	0.006	NO	0.864	D	0.006	---
			SAT	0.622	B	0.630	B	0.008	NO	0.630	B	0.008	---
29	Santa Anita Avenue/ Garvey Avenue	Signalized	AM	1.065	F	1.073	F	0.008	NO	1.073	F	0.008	---
			PM	1.001	F	1.015	F	0.014	NO	1.015	F	0.014	---
			SAT	0.992	E	1.011	F	0.019	NO	1.011	F	0.019	---
30	Tyler Avenue/ Valley Boulevard	Signalized	AM	0.730	C	0.736	C	0.006	NO	0.736	C	0.006	---
			PM	0.724	C	0.736	C	0.012	NO	0.736	C	0.012	---
			SAT	0.619	B	0.639	B	0.020	NO	0.639	B	0.020	---
31	Tyler Avenue/ Ramona Boulevard	Signalized	AM	0.530	A	0.531	A	0.001	NO	0.531	A	0.001	---
			PM	0.568	A	0.572	A	0.004	NO	0.572	A	0.004	---
			SAT	0.502	A	0.509	A	0.007	NO	0.509	A	0.007	---

	Saturday Mid-day Peak Hour
• Int. No. 23: Baldwin Avenue/Loftus Drive	Weekday AM Peak Hour
• Int. No. 24: Baldwin Avenue/Flair Dr.-I-10 EB Ramps	Weekday AM Peak Hour
	Weekday PM Peak Hour
	Saturday Mid-day Peak Hour
• Int. No. 40: Durfee Avenue/Ramona Boulevard	Weekday AM Peak Hour

Incremental but not significant impacts are noted at the remaining study intersections. The existing with project build-out (existing plus project build-out) traffic volumes at the study intersections during the weekday AM peak hour, weekday PM peak hour and Saturday mid-day peak hour are provided in ***Figures 10-1***, ***10-2*** and ***10-3***, respectively.

10.2 Future Year 2016 Conditions

10.2.1 Future Year 2016 Without Project Conditions

The future year 2016 without project conditions were forecast based on the addition of traffic generated by the completion and occupancy of related projects, as well as the growth in traffic due to the combined effects of continuing development, intensification of existing developments and other factors (i.e., ambient growth to year 2016). The *v/c* ratios and delay at all of the study intersections are incrementally increased with the addition of ambient traffic and traffic generated by the related projects listed in *Table 7–1*. As presented in column [1] of *Table 10–2*, 16 of the 31 City of El Monte study intersections are expected to operate at LOS D or better during the weekday AM and PM peak hours with the addition of growth in ambient traffic and related projects traffic under the future without project conditions. The remaining study intersections are expected to operate at LOS E or F during the weekday AM peak hour, weekday PM peak hour and/or the Saturday mid-day peak hour under the future year 2016 without project conditions as shown in *Table 10-2*. The future year 2016 without project (existing, ambient growth to year 2016 and related projects) traffic volumes at the study intersections during the weekday AM peak hour, weekday PM peak hour and Saturday mid-day peak hour are provided in ***Figures 10-4***, ***10-5*** and ***10-6***, respectively.

10.2.2 Future Year 2016 With Phase I Project Conditions

As shown in column [2] of *Table 10-2*, application of the City of El Monte's threshold criteria to the "Future Year 2016 With Phase I Project" scenario indicates that the Phase I project is expected to create a significant impact at 6 of the 31 City of El Monte study intersections during the weekday AM peak hour, weekday PM peak hour and/or the Saturday mid-day peak hour. The Phase I project is expected to create significant impacts at the following locations according to the City of El Monte's impact criteria during the peak hour(s) shown below:

• Int. No. 10: Aerojet Ave.-I-10 EB Ramps/Flair Drive	Weekday AM/PM Peak Hours

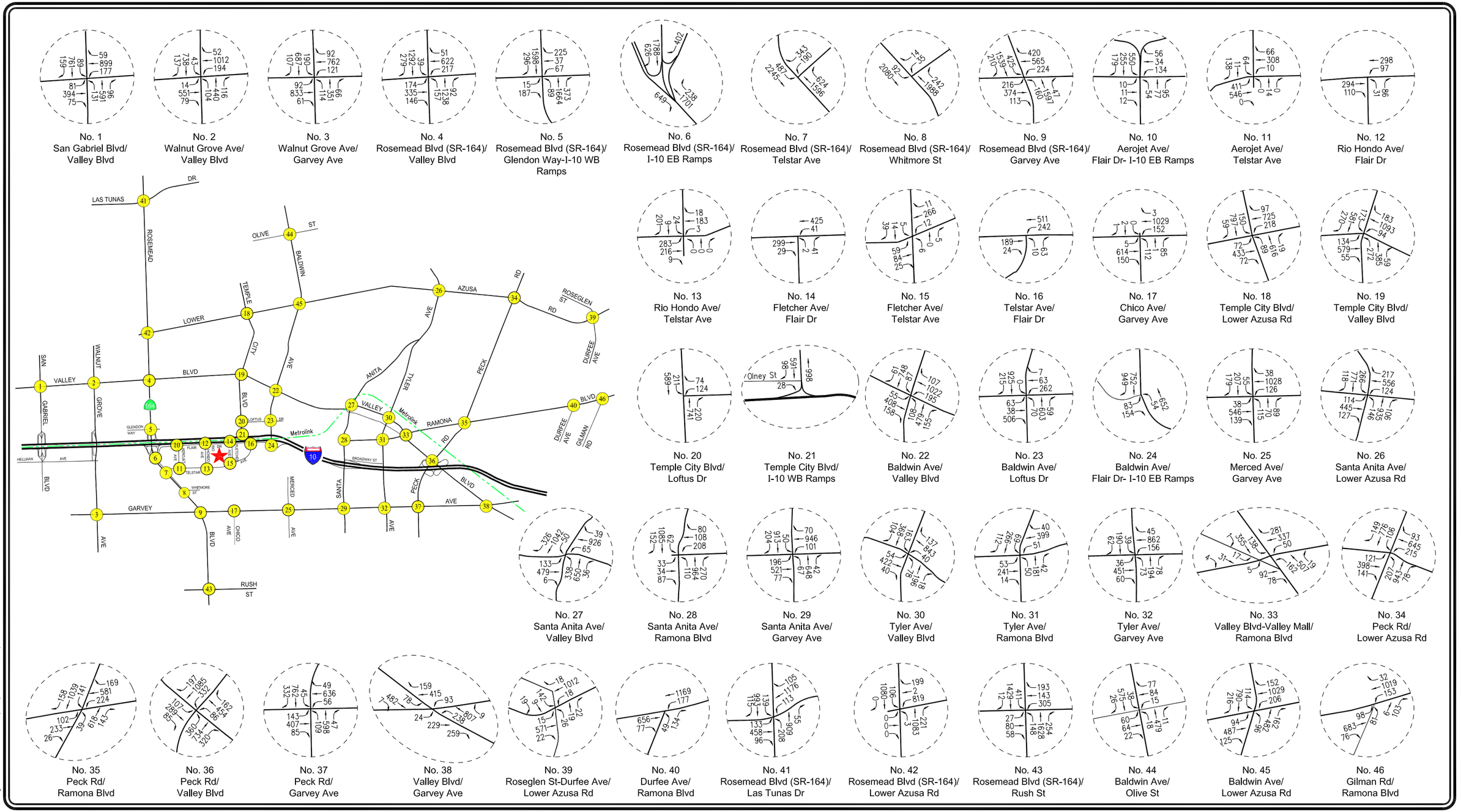

NOT TO SCALE

LINSCOTT, LAW & GREENSPAN, engineers

FIGURE 10-1
EXISTING WITH PROJECT BUILD-OUT TRAFFIC VOLUMES
WEEKDAY AM PEAK HOUR

FLAIR SPECTRUM SPECIFIC PLAN

o:\job_file\4074\dwg\f10-1.dwg LDP 09:16:07 09/24/2014 rodriguez

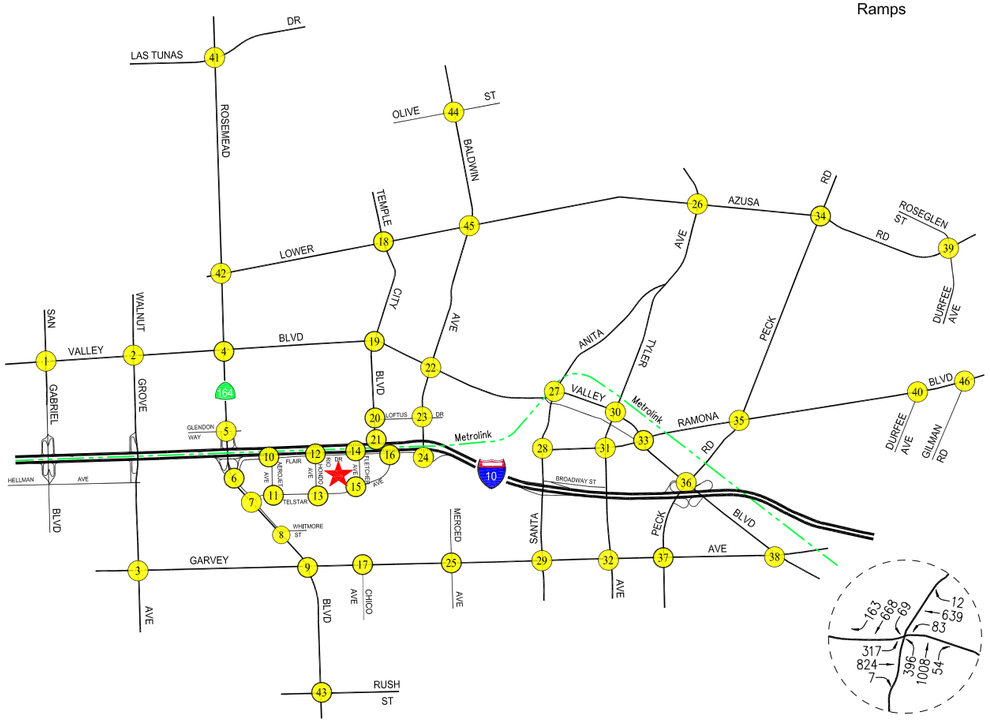

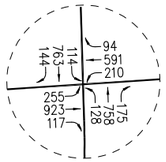

No. 1
San Gabriel Blvd/
Valley Blvd

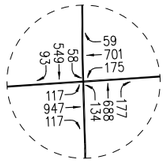

No. 2
Walnut Grove Ave/
Valley Blvd

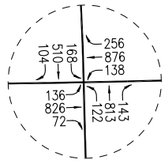

No. 3
Walnut Grove Ave/
Garvey Ave

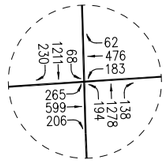

No. 4
Rosemead Blvd (SR-164)/
Valley Blvd

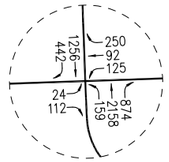

No. 5
Rosemead Blvd (SR-164)/
Glendon Way-I-10 WB
Ramps

No. 6
Rosemead Blvd (SR-164)/
I-10 EB Ramps

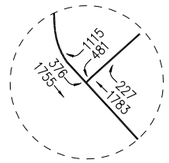

No. 7
Rosemead Blvd (SR-164)/
Telstar Ave

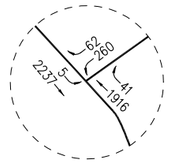

No. 8
Rosemead Blvd (SR-164)/
Whitmore St

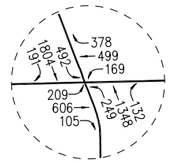

No. 9
Rosemead Blvd (SR-164)/
Garvey Ave

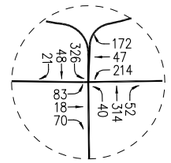

No. 10
Aerojet Ave/
Flair Dr- I-10 EB Ramps

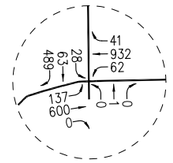

No. 11
Aerojet Ave/
Telstar Ave

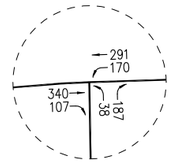

No. 12
Rio Hondo Ave/
Flair Dr

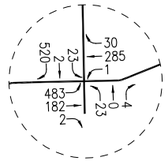

No. 13
Rio Hondo Ave/
Telstar Ave

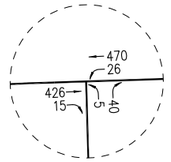

No. 14
Fletcher Ave/
Flair Dr

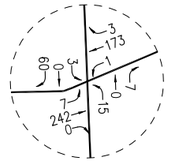

No. 15
Fletcher Ave/
Telstar Ave

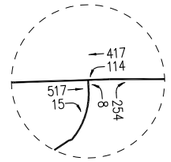

No. 16
Telstar Ave/
Flair Dr

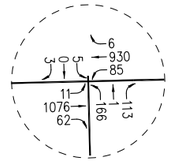

No. 17
Chico Ave/
Garvey Ave

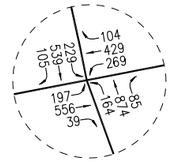

No. 18
Temple City Blvd/
Lower Azusa Rd

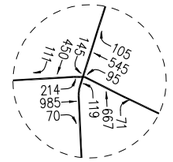

No. 19
Temple City Blvd/
Valley Blvd

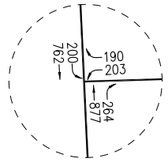

No. 20
Temple City Blvd/
Loftus Dr

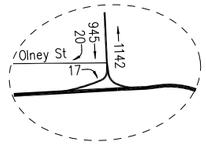

No. 21
Temple City Blvd/
I-10 WB Ramps

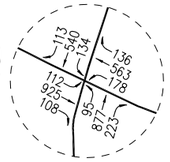

No. 22
Baldwin Ave/
Valley Blvd

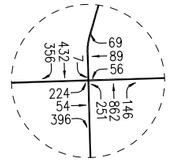

No. 23
Baldwin Ave/
Loftus Dr

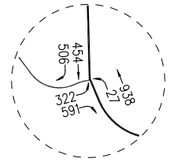

No. 24
Baldwin Ave/
Flair Dr- I-10 EB Ramps

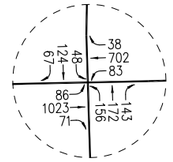

No. 25
Merced Ave/
Garvey Ave

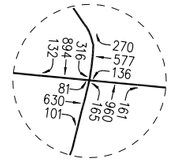

No. 26
Santa Anita Ave/
Lower Azusa Rd

No. 27
Santa Anita Ave/
Valley Blvd

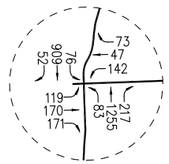

No. 28
Santa Anita Ave/
Ramona Blvd

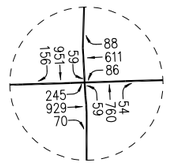

No. 29
Santa Anita Ave/
Garvey Ave

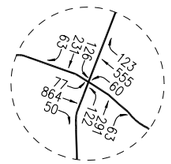

No. 30
Tyler Ave/
Valley Blvd

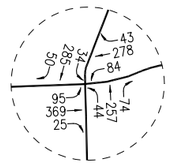

No. 31
Tyler Ave/
Ramona Blvd

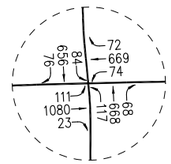

No. 32
Tyler Ave/
Garvey Ave

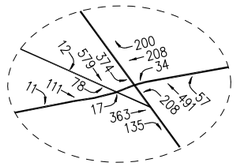

No. 33
Valley Blvd-Valley Mall/
Ramona Blvd

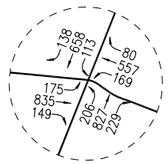

No. 34
Peck Rd/
Lower Azusa Rd

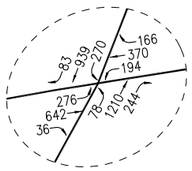

No. 35
Peck Rd/
Ramona Blvd

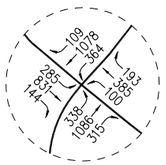

No. 36
Peck Rd/
Valley Blvd

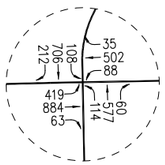

No. 37
Peck Rd/
Garvey Ave

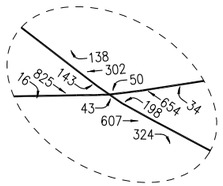

No. 38
Valley Blvd/
Garvey Ave

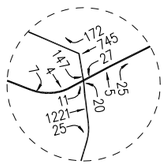

No. 39
Roseglen St-Durfee Ave/
Lower Azusa Rd

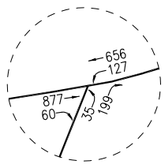

No. 40
Durfee Ave/
Ramona Blvd

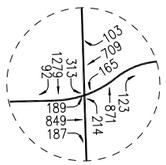

No. 41
Rosemead Blvd (SR-164)/
Las Tunas Dr

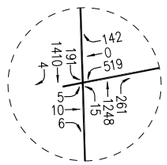

No. 42
Rosemead Blvd (SR-164)/
Lower Azusa Rd

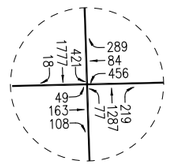

No. 43
Rosemead Blvd (SR-164)/
Rush St

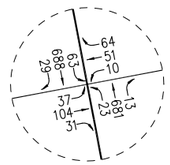

No. 44
Baldwin Ave/
Olive St

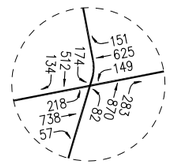

No. 45
Baldwin Ave/
Lower Azusa Rd

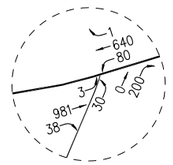

No. 46
Gilman Rd/
Ramona Blvd

NOT TO SCALE

LINSCOTT, LAW & GREENSPAN, engineers

FIGURE 10-2
EXISTING WITH PROJECT BUILD-OUT TRAFFIC VOLUMES
WEEKDAY PM PEAK HOUR
FLAIR SPECTRUM SPECIFIC PLAN

o:\job_file\4074\dwg\f10-2.dwg LDP 09:24:42 09/24/2014 rodriguez

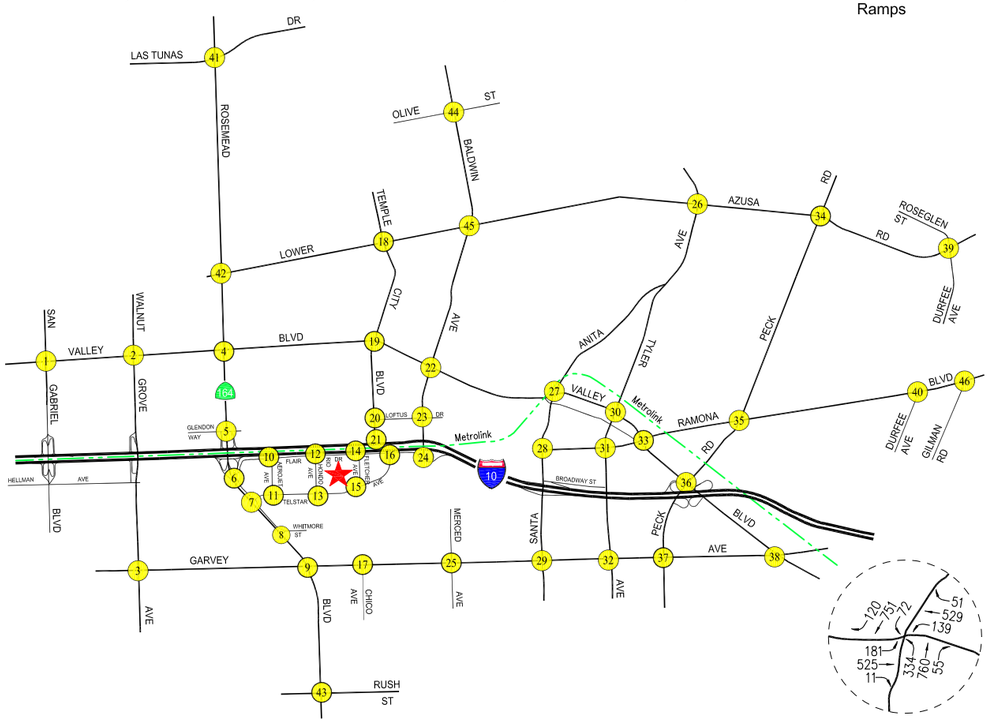

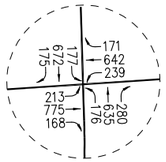

No. 1
San Gabriel Blvd/
Valley Blvd

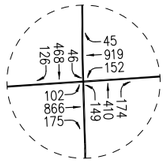

No. 2
Walnut Grove Ave/
Valley Blvd

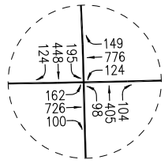

No. 3
Walnut Grove Ave/
Garvey Ave

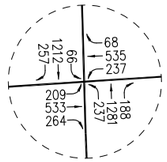

No. 4
Rosemead Blvd (SR-164)/
Valley Blvd

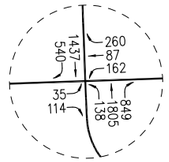

No. 5
Rosemead Blvd (SR-164)/
Glendon Way-I-10 WB
Ramps

No. 6
Rosemead Blvd (SR-164)/
I-10 EB Ramps

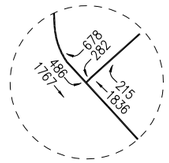

No. 7
Rosemead Blvd (SR-164)/
Telstar Ave

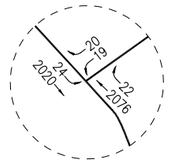

No. 8
Rosemead Blvd (SR-164)/
Whitmore St

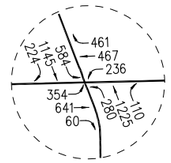

No. 9
Rosemead Blvd (SR-164)/
Garvey Ave

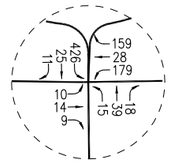

No. 10
Aerojet Ave/
Flair Dr- I-10 EB Ramps

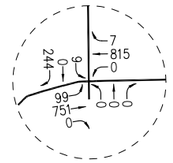

No. 11
Aerojet Ave/
Telstar Ave

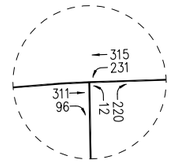

No. 12
Rio Hondo Ave/
Flair Dr

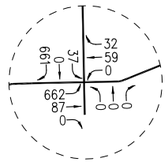

No. 13
Rio Hondo Ave/
Telstar Ave

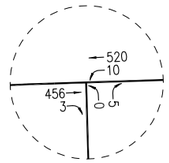

No. 14
Fletcher Ave/
Flair Dr

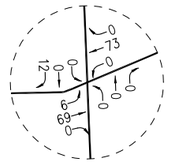

No. 15
Fletcher Ave/
Telstar Ave

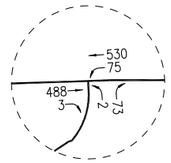

No. 16
Telstar Ave/
Flair Dr

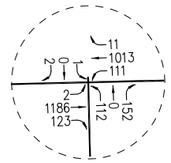

No. 17
Chico Ave/
Garvey Ave

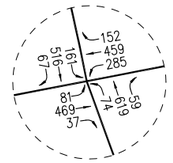

No. 18
Temple City Blvd/
Lower Azusa Rd

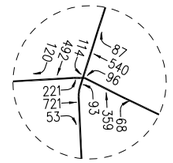

No. 19
Temple City Blvd/
Valley Blvd

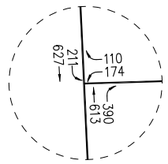

No. 20
Temple City Blvd/
Loftus Dr

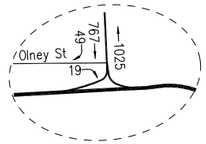

No. 21
Temple City Blvd/
I-10 WB Ramps

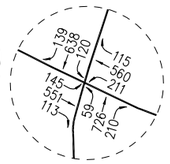

No. 22
Baldwin Ave/
Valley Blvd

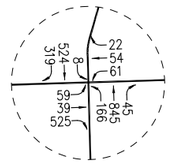

No. 23
Baldwin Ave/
Loftus Dr

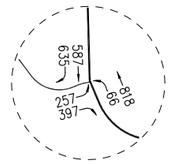

No. 24
Baldwin Ave/
Flair Dr- I-10 EB Ramps

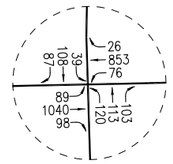

No. 25
Merced Ave/
Garvey Ave

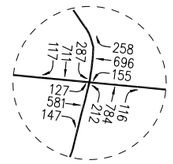

No. 26
Santa Anita Ave/
Lower Azusa Rd

No. 27
Santa Anita Ave/
Valley Blvd

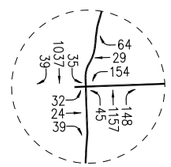

No. 28
Santa Anita Ave/
Ramona Blvd

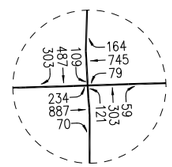

No. 29
Santa Anita Ave/
Garvey Ave

No. 30
Tyler Ave/
Valley Blvd

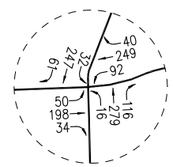

No. 31
Tyler Ave/
Ramona Blvd

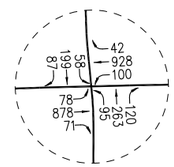

No. 32
Tyler Ave/
Garvey Ave

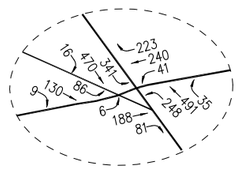

No. 33
Valley Blvd-Valley Mall/
Ramona Blvd

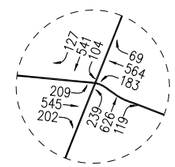

No. 34
Peck Rd/
Lower Azusa Rd

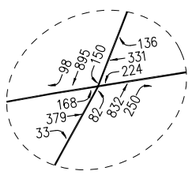

No. 35
Peck Rd/
Ramona Blvd

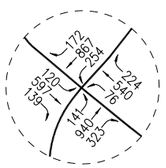

No. 36
Peck Rd/
Valley Blvd

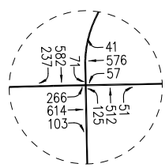

No. 37
Peck Rd/
Garvey Ave

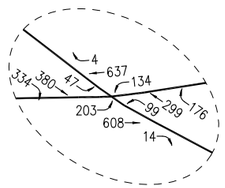

No. 38
Valley Blvd/
Garvey Ave

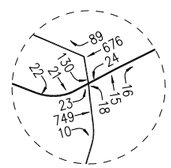

No. 39
Roseglen St-Durfee Ave/
Lower Azusa Rd

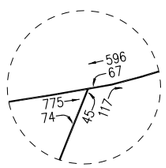

No. 40
Durfee Ave/
Ramona Blvd

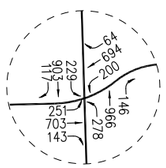

No. 41
Rosemead Blvd (SR-164)/
Las Tunas Dr

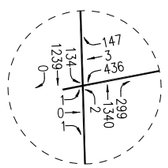

No. 42
Rosemead Blvd (SR-164)/
Lower Azusa Rd

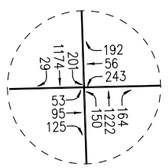

No. 43
Rosemead Blvd (SR-164)/
Rush St

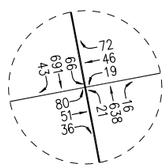

No. 44
Baldwin Ave/
Olive St

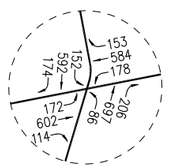

No. 45
Baldwin Ave/
Lower Azusa Rd

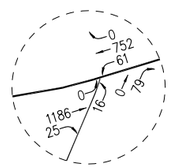

No. 46
Gilman Rd/
Ramona Blvd

NOT TO SCALE

LINSCOTT, LAW & GREENSPAN, engineers

FIGURE 10-3
EXISTING WITH PROJECT BUILD-OUT TRAFFIC VOLUMES
SATURDAY MID-DAY PEAK HOUR

FLAIR SPECTRUM SPECIFIC PLAN

o:\job_file\4074\dwg\f10-3.dwg LDP 09:28:41 09/24/2014 rodriguez

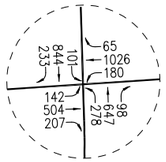

No. 1
San Gabriel Blvd/
Valley Blvd

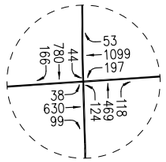

No. 2
Walnut Grove Ave/
Valley Blvd

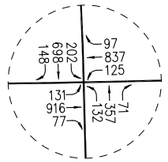

No. 3
Walnut Grove Ave/
Garvey Ave

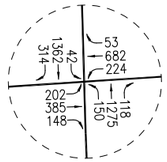

No. 4
Rosemead Blvd (SR-164)/
Valley Blvd

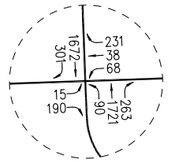

No. 5
Rosemead Blvd (SR-164)/
Glendon Way-I-10 WB
Ramps

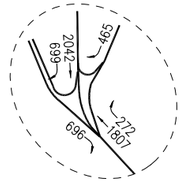

No. 6
Rosemead Blvd (SR-164)/
I-10 EB Ramps

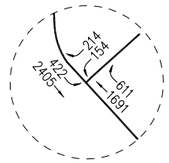

No. 7
Rosemead Blvd (SR-164)/
Telstar Ave

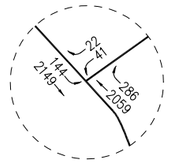

No. 8
Rosemead Blvd (SR-164)/
Whitmore St

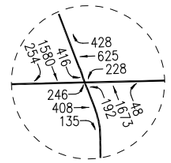

No. 9
Rosemead Blvd (SR-164)/
Garvey Ave

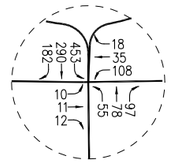

No. 10
Aerojet Ave/
Flair Dr- I-10 EB Ramps

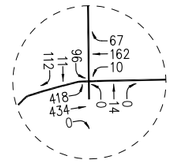

No. 11
Aerojet Ave/
Telstar Ave

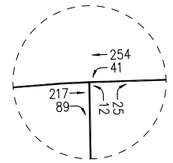

No. 12
Rio Hondo Ave/
Flair Dr

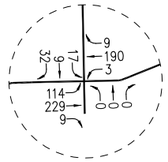

No. 13
Rio Hondo Ave/
Telstar Ave

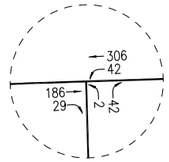

No. 14
Fletcher Ave/
Flair Dr

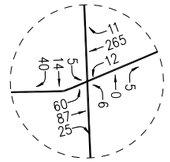

No. 15
Fletcher Ave/
Telstar Ave

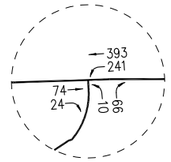

No. 16
Telstar Ave/
Flair Dr

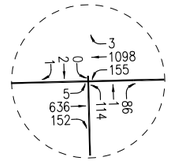

No. 17
Chico Ave/
Garvey Ave

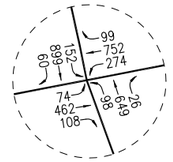

No. 18
Temple City Blvd/
Lower Azusa Rd

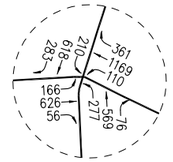

No. 19
Temple City Blvd/
Valley Blvd

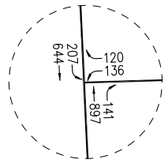

No. 20
Temple City Blvd/
Loftus Dr

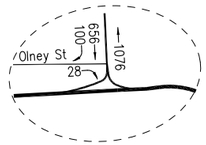

No. 21
Temple City Blvd/
I-10 WB Ramps

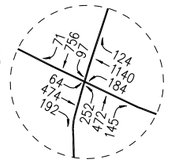

No. 22
Baldwin Ave/
Valley Blvd

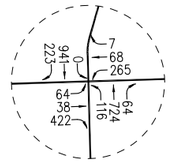

No. 23
Baldwin Ave/
Loftus Dr

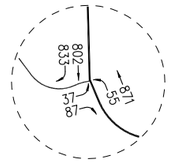

No. 24
Baldwin Ave/
Flair Dr- I-10 EB Ramps

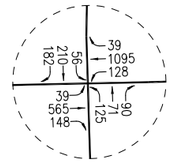

No. 25
Merced Ave/
Garvey Ave

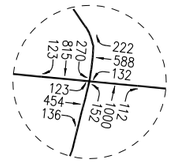

No. 26
Santa Anita Ave/
Lower Azusa Rd

No. 27
Santa Anita Ave/
Valley Blvd

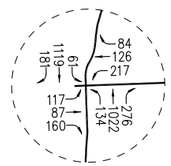

No. 28
Santa Anita Ave/
Ramona Blvd

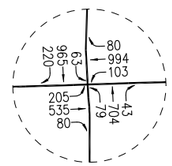

No. 29
Santa Anita Ave/
Garvey Ave

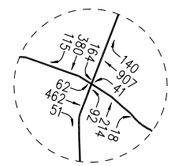

No. 30
Tyler Ave/
Valley Blvd

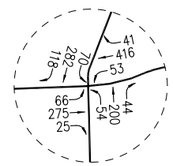

No. 31
Tyler Ave/
Ramona Blvd

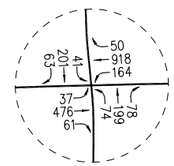

No. 32
Tyler Ave/
Garvey Ave

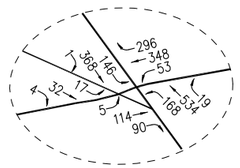

No. 33
Valley Blvd-Valley Mall/
Ramona Blvd

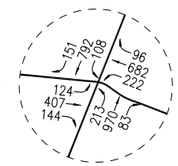

No. 34
Peck Rd/
Lower Azusa Rd

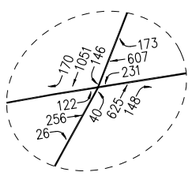

No. 35
Peck Rd/
Ramona Blvd

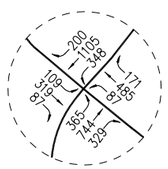

No. 36
Peck Rd/
Valley Blvd

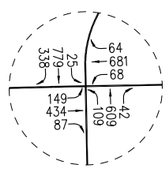

No. 37
Peck Rd/
Garvey Ave

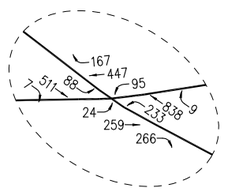

No. 38
Valley Blvd/
Garvey Ave

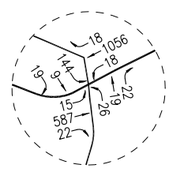

No. 39
Roseglen St-Durfee Ave/
Lower Azusa Rd

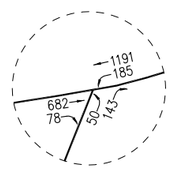

No. 40
Durfee Ave/
Ramona Blvd

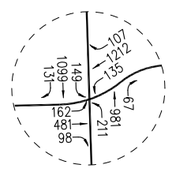

No. 41
Rosemead Blvd (SR-164)/
Las Tunas Dr

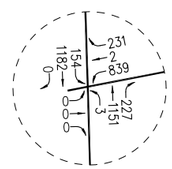

No. 42
Rosemead Blvd (SR-164)/
Lower Azusa Rd

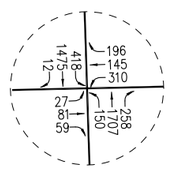

No. 43
Rosemead Blvd (SR-164)/
Rush St

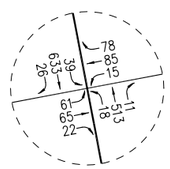

No. 44
Baldwin Ave/
Olive St

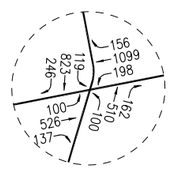

No. 45
Baldwin Ave/
Lower Azusa Rd

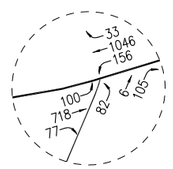

No. 46
Gilman Rd/
Ramona Blvd

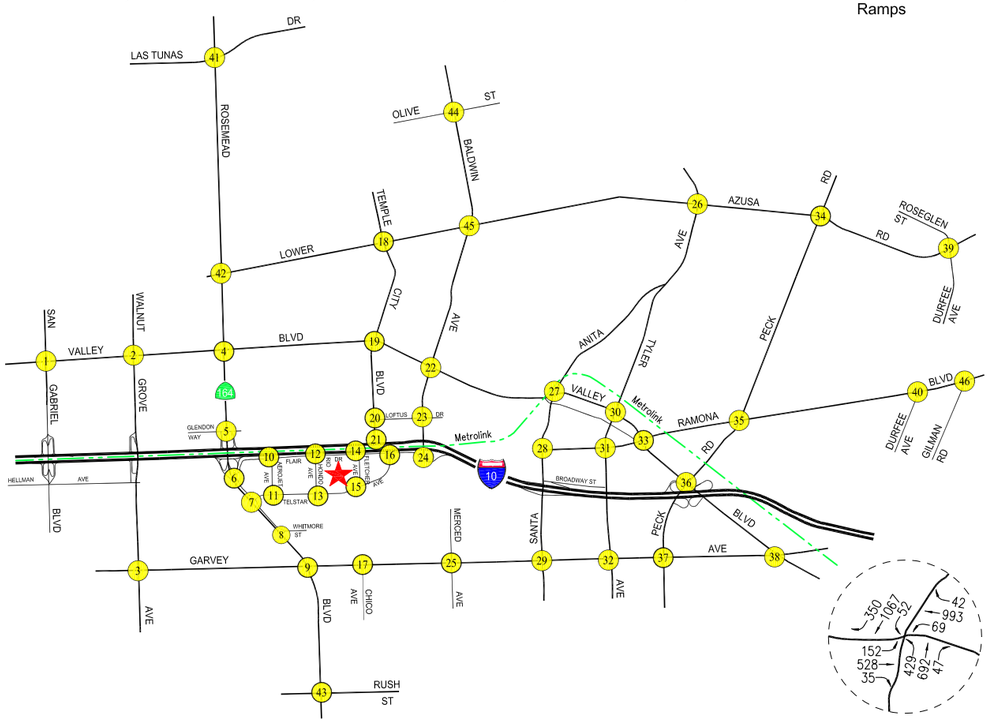

PROJECT SITE

NOT TO SCALE

LINSCOTT, LAW & GREENSPAN, engineers

FIGURE 10-4

FUTURE YEAR 2016 WITHOUT PROJECT TRAFFIC VOLUMES

WEEKDAY AM PEAK HOUR

FLAIR SPECTRUM SPECIFIC PLAN

o:\job_file\4074\dwg\f10-4.dwg LDP 09:30:54 09/24/2014 rodriguez

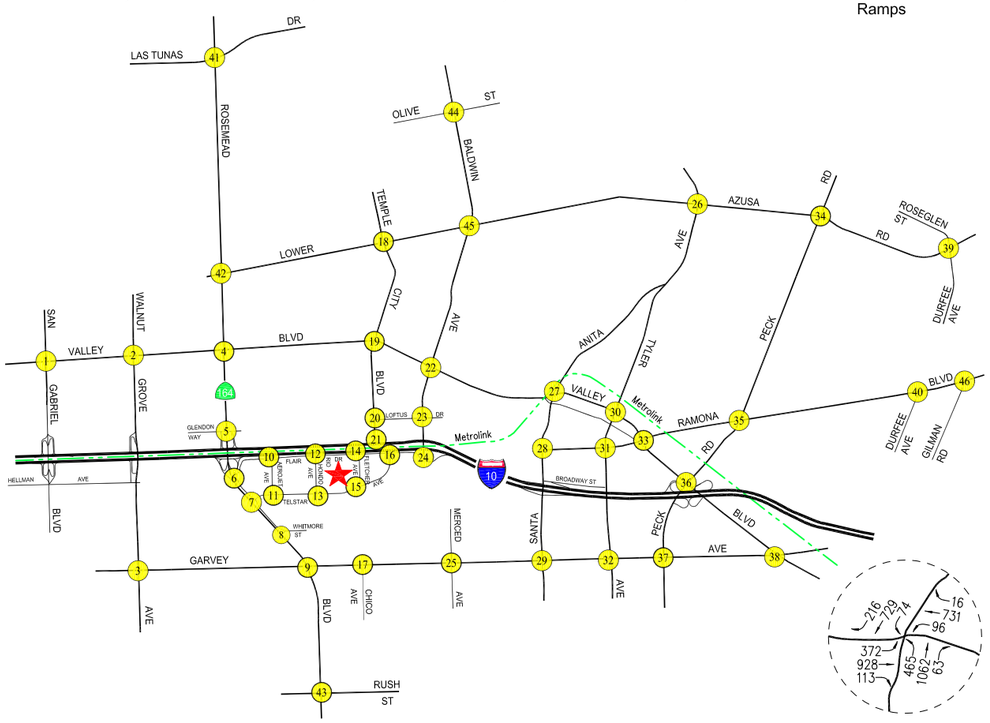

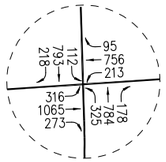

No. 1
San Gabriel Blvd/
Valley Blvd

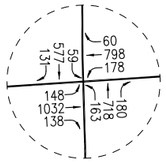

No. 2
Walnut Grove Ave/
Valley Blvd

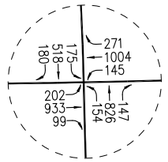

No. 3
Walnut Grove Ave/
Garvey Ave

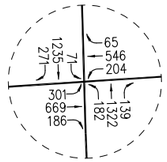

No. 4
Rosemead Blvd (SR-164)/
Valley Blvd

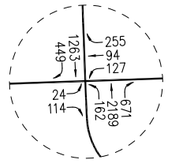

No. 5
Rosemead Blvd (SR-164)/
Glendon Way-I-10 WB
Ramps

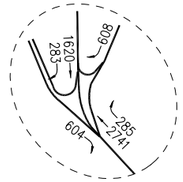

No. 6
Rosemead Blvd (SR-164)/
I-10 EB Ramps

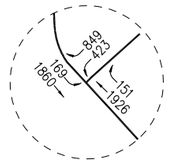

No. 7
Rosemead Blvd (SR-164)/
Telstar Ave

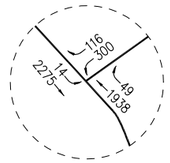

No. 8
Rosemead Blvd (SR-164)/
Whitmore St

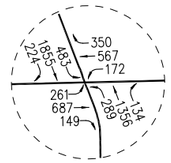

No. 9
Rosemead Blvd (SR-164)/
Garvey Ave

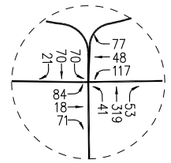

No. 10
Aerojet Ave/
Flair Dr- I-10 EB Ramps

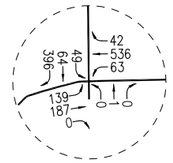

No. 11
Aerojet Ave/
Telstar Ave

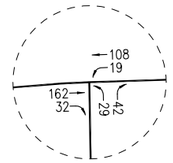

No. 12
Rio Hondo Ave/
Flair Dr

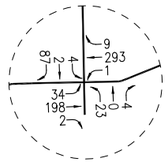

No. 13
Rio Hondo Ave/
Telstar Ave

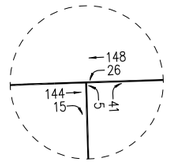

No. 14
Fletcher Ave/
Flair Dr

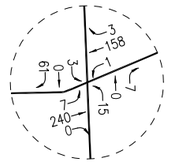

No. 15
Fletcher Ave/
Telstar Ave

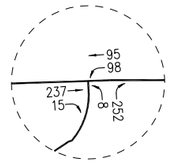

No. 16
Telstar Ave/
Flair Dr

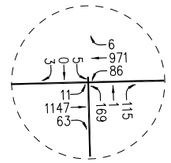

No. 17
Chico Ave/
Garvey Ave

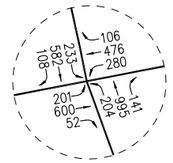

No. 18
Temple City Blvd/
Lower Azusa Rd

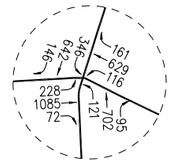

No. 19
Temple City Blvd/
Valley Blvd

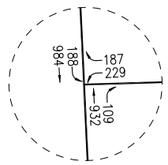

No. 20
Temple City Blvd/
Loftus Dr

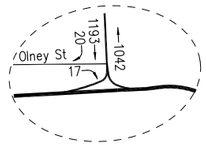

No. 21
Temple City Blvd/
I-10 WB Ramps

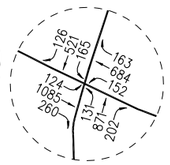

No. 22
Baldwin Ave/
Valley Blvd

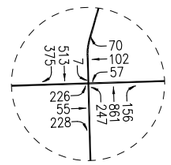

No. 23
Baldwin Ave/
Loftus Dr

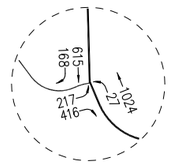

No. 24
Baldwin Ave/
Flair Dr- I-10 EB Ramps

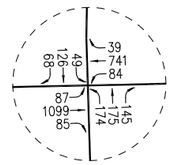

No. 25
Merced Ave/
Garvey Ave

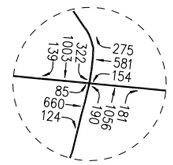

No. 26
Santa Anita Ave/
Lower Azusa Rd

No. 27
Santa Anita Ave/
Valley Blvd

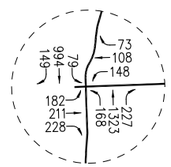

No. 28
Santa Anita Ave/
Ramona Blvd

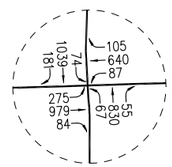

No. 29
Santa Anita Ave/
Garvey Ave

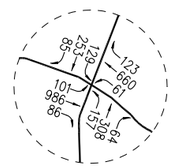

No. 30
Tyler Ave/
Valley Blvd

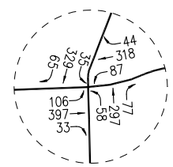

No. 31
Tyler Ave/
Ramona Blvd

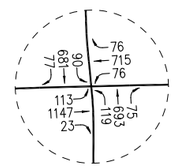

No. 32
Tyler Ave/
Garvey Ave

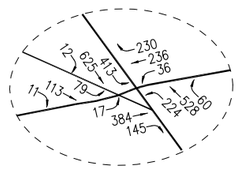

No. 33
Valley Blvd-Valley Mall/
Ramona Blvd

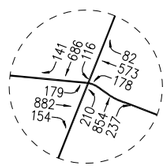

No. 34
Peck Rd/
Lower Azusa Rd

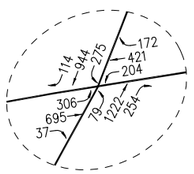

No. 35
Peck Rd/
Ramona Blvd

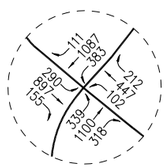

No. 36
Peck Rd/
Valley Blvd

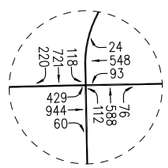

No. 37
Peck Rd/
Garvey Ave

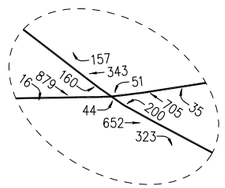

No. 38
Valley Blvd/
Garvey Ave

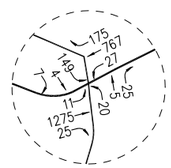

No. 39
Roseglen St-Durfee Ave/
Lower Azusa Rd

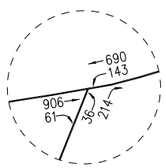

No. 40
Durfee Ave/
Ramona Blvd

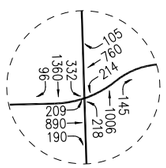

No. 41
Rosemead Blvd (SR-164)/
Las Tunas Dr

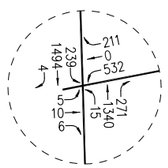

No. 42
Rosemead Blvd (SR-164)/
Lower Azusa Rd

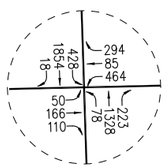

No. 43
Rosemead Blvd (SR-164)/
Rush St

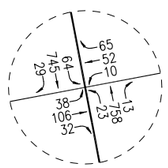

No. 44
Baldwin Ave/
Olive St

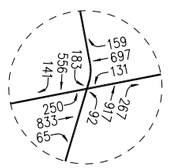

No. 45
Baldwin Ave/
Lower Azusa Rd

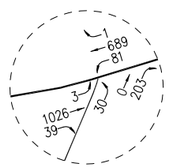

No. 46
Gilman Rd/
Ramona Blvd

NOT TO SCALE

★ PROJECT SITE

LINSCOTT, LAW & GREENSPAN, engineers

FIGURE 10-5

FUTURE YEAR 2016 WITHOUT PROJECT TRAFFIC VOLUMES

WEEKDAY PM PEAK HOUR

FLAIR SPECTRUM SPECIFIC PLAN

o:\job_file\4074\dwg\f10-5.dwg LDP 09:33:22 09/24/2014 rodriguez

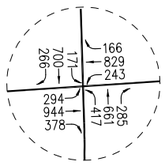

No. 1
San Gabriel Blvd/
Valley Blvd

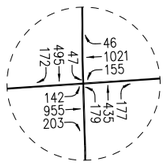

No. 2
Walnut Grove Ave/
Valley Blvd

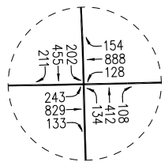

No. 3
Walnut Grove Ave/
Garvey Ave

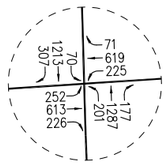

No. 4
Rosemead Blvd (SR-164)/
Valley Blvd

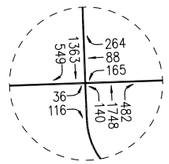

No. 5
Rosemead Blvd (SR-164)/
Glendon Way-I-10 WB
Ramps

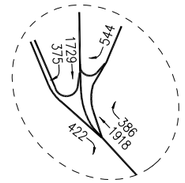

No. 6
Rosemead Blvd (SR-164)/
I-10 EB Ramps

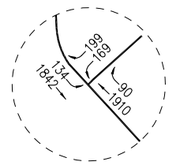

No. 7
Rosemead Blvd (SR-164)/
Telstar Ave

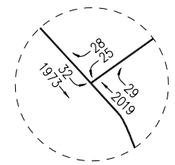

No. 8
Rosemead Blvd (SR-164)/
Whitmore St

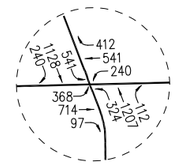

No. 9
Rosemead Blvd (SR-164)/
Garvey Ave

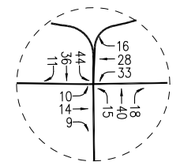

No. 10
Aerojet Ave/
Flair Dr- I-10 EB Ramps

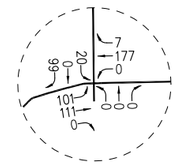

No. 11
Aerojet Ave/
Telstar Ave

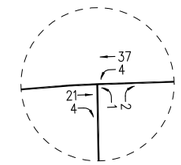

No. 12
Rio Hondo Ave/
Flair Dr

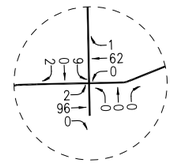

No. 13
Rio Hondo Ave/
Telstar Ave

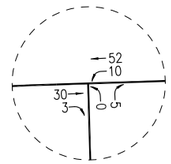

No. 14
Fletcher Ave/
Flair Dr

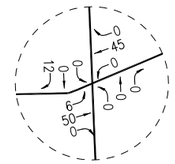

No. 15
Fletcher Ave/
Telstar Ave

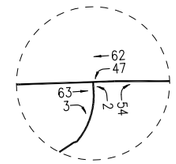

No. 16
Telstar Ave/
Flair Dr

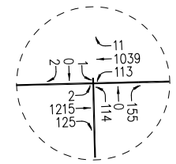

No. 17
Chico Ave/
Garvey Ave

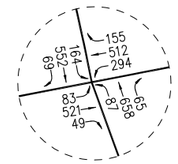

No. 18
Temple City Blvd/
Lower Azusa Rd

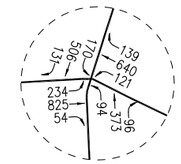

No. 19
Temple City Blvd/
Valley Blvd

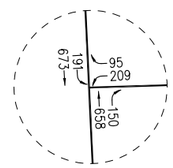

No. 20
Temple City Blvd/
Loftus Dr

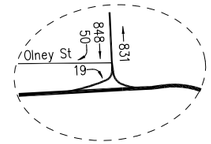

No. 21
Temple City Blvd/
I-10 WB Ramps

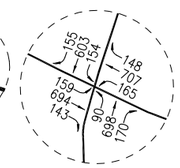

No. 22
Baldwin Ave/
Valley Blvd

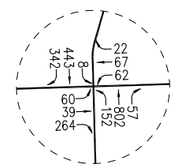

No. 23
Baldwin Ave/
Loftus Dr

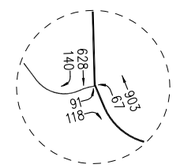

No. 24
Baldwin Ave/
Flair Dr- I-10 EB Ramps

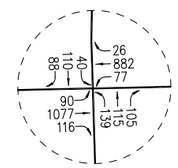

No. 25
Merced Ave/
Garvey Ave

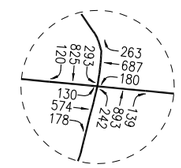

No. 26
Santa Anita Ave/
Lower Azusa Rd

No. 27
Santa Anita Ave/
Valley Blvd

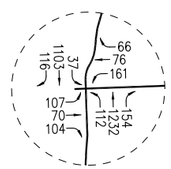

No. 28
Santa Anita Ave/
Ramona Blvd

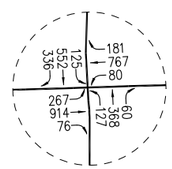

No. 29
Santa Anita Ave/
Garvey Ave

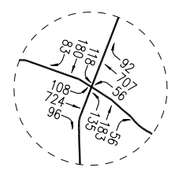

No. 30
Tyler Ave/
Valley Blvd

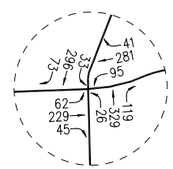

No. 31
Tyler Ave/
Ramona Blvd

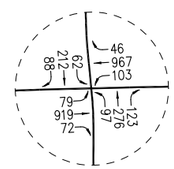

No. 32
Tyler Ave/
Garvey Ave

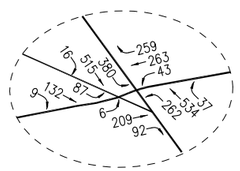

No. 33
Valley Blvd-Valley Mall/
Ramona Blvd

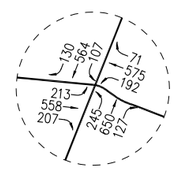

No. 34
Peck Rd/
Lower Azusa Rd

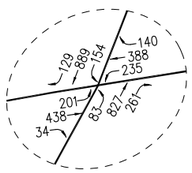

No. 35
Peck Rd/
Ramona Blvd

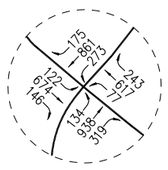

No. 36
Peck Rd/
Valley Blvd

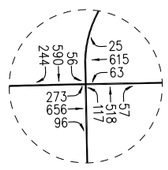

No. 37
Peck Rd/
Garvey Ave

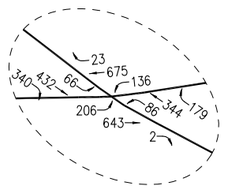

No. 38
Valley Blvd/
Garvey Ave

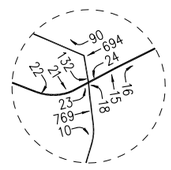

No. 39
Roseglen St-Durfee Ave/
Lower Azusa Rd

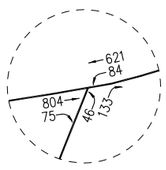

No. 40
Durfee Ave/
Ramona Blvd

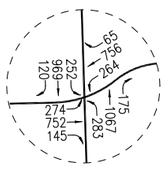

No. 41
Rosemead Blvd (SR-164)/
Las Tunas Dr

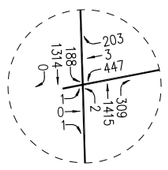

No. 42
Rosemead Blvd (SR-164)/
Lower Azusa Rd

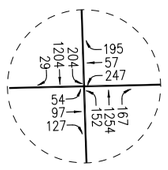

No. 43
Rosemead Blvd (SR-164)/
Rush St

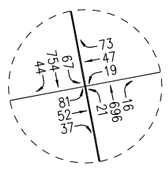

No. 44
Baldwin Ave/
Olive St

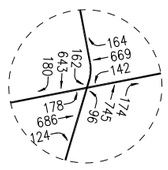

No. 45
Baldwin Ave/
Lower Azusa Rd

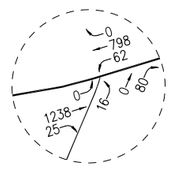

No. 46
Gilman Rd/
Ramona Blvd

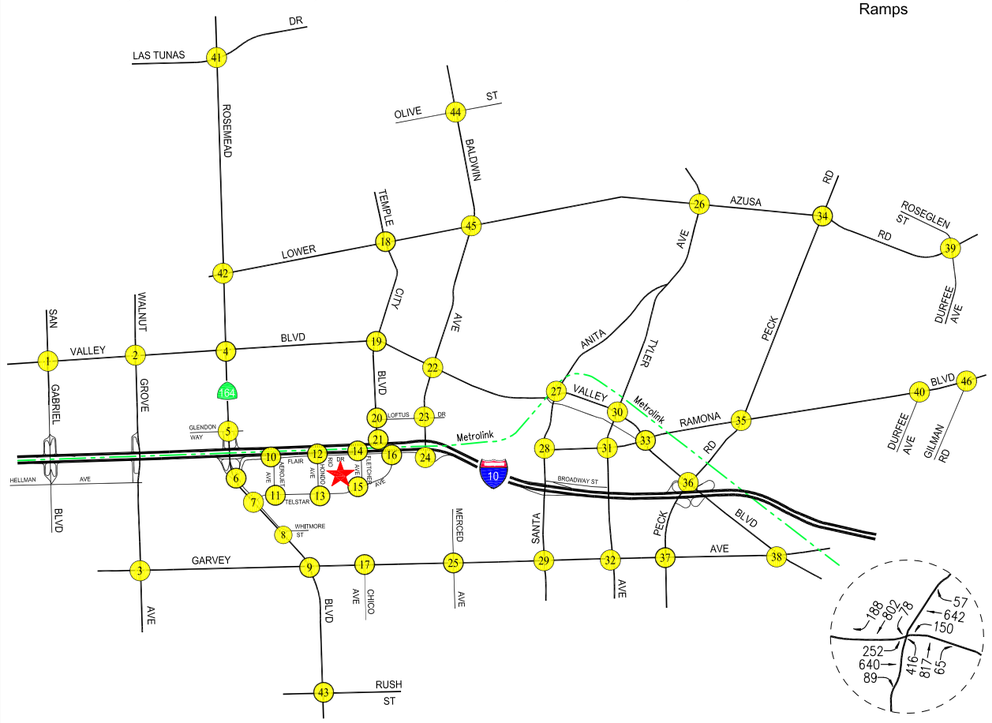

PROJECT SITE

NOT TO SCALE

FIGURE 10-6

FUTURE YEAR 2016 WITHOUT PROJECT TRAFFIC VOLUMES

SATURDAY MID-DAY PEAK HOUR

FLAIR SPECTRUM SPECIFIC PLAN

LINSCOTT, LAW & GREENSPAN, engineers

o:\job_file\4074\dwg\f10-6.dwg LDP 09:36:13 09/24/2014 rodriguez

- Int. No. 11: Aerojet Avenue/Telstar Avenue — Weekday AM Peak Hour
  Weekday PM Peak Hour
  Saturday Mid-day Peak Hour
- Int. No. 13: Rio Hondo Avenue/Telstar Avenue — Weekday PM Peak Hour
  Saturday Mid-day Peak Hour
- Int. No. 23: Baldwin Avenue/Loftus Drive — Weekday AM Peak Hour
- Int. No. 24: Baldwin Avenue/Flair Dr.-I-10 EB Ramps — Weekday AM Peak Hour
  Weekday PM Peak Hour
  Saturday Mid-day Peak Hour
- Int. No. 40: Durfee Avenue/Ramona Boulevard — Weekday AM Peak Hour

Incremental but not significant impacts are noted at the remaining study intersections. The future year 2016 with Phase I project (existing, ambient growth to year 2016, related projects, and Phase I project) traffic volumes at the study intersections during the weekday AM peak hour, weekday PM peak hour and Saturday mid-day peak hour are provided in ***Figures 10-7***, ***10-8*** and ***10-9***, respectively.

10.3 Future Year 2019 Conditions

10.3.1 Future Year 2019 Without Project Conditions

The future year 2019 without project conditions were forecast based on the addition of traffic generated by the completion and occupancy of related projects, as well as the growth in traffic due to the combined effects of continuing development, intensification of existing developments and other factors (i.e., ambient growth to year 2019). The *v/c* ratios and delay at all of the study intersections are incrementally increased with the addition of ambient traffic and traffic generated by the related projects listed in *Table 7–1*. As presented in column [1] of *Table 10–3*, 16 of the 31 City of El Monte study intersections are expected to operate at LOS D or better during the weekday AM and PM peak hours with the addition of growth in ambient traffic and related projects traffic under the future without project conditions. The remaining study intersections are expected to operate at LOS E or F during the weekday AM peak hour, weekday PM peak hour and/or the Saturday mid-day peak hour under the future year 2019 without project conditions as shown in *Table 10-3*. The future year 2019 without project (existing, ambient growth to year 2019 and related projects) traffic volumes at the study intersections during the weekday AM peak hour, weekday PM peak hour and Saturday mid-day peak hour are provided in ***Figures 10-10***, ***10-11*** and ***10-12***, respectively.

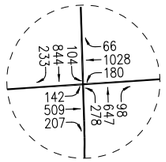

No. 1
San Gabriel Blvd/
Valley Blvd

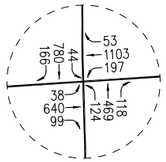

No. 2
Walnut Grove Ave/
Valley Blvd

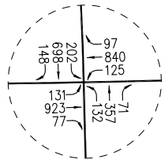

No. 3
Walnut Grove Ave/
Garvey Ave

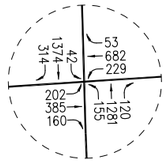

No. 4
Rosemead Blvd (SR-164)/
Valley Blvd

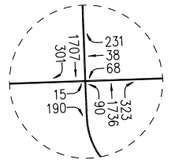

No. 5
Rosemead Blvd (SR-164)/
Glendon Way-I-10 WB
Ramps

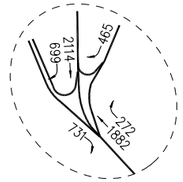

No. 6
Rosemead Blvd (SR-164)/
I-10 EB Ramps

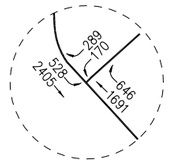

No. 7
Rosemead Blvd (SR-164)/
Telstar Ave

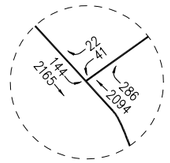

No. 8
Rosemead Blvd (SR-164)/
Whitmore St

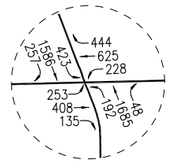

No. 9
Rosemead Blvd (SR-164)/
Garvey Ave

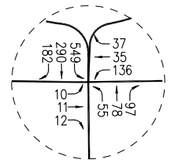

No. 10
Aerojet Ave/
Flair Dr- I-10 EB Ramps

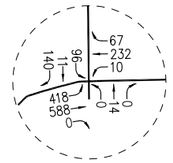

No. 11
Aerojet Ave/
Telstar Ave

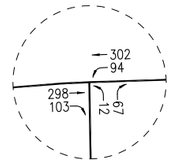

No. 12
Rio Hondo Ave/
Flair Dr

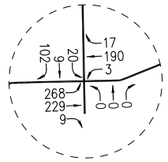

No. 13
Rio Hondo Ave/
Telstar Ave

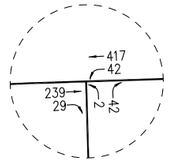

No. 14
Fletcher Ave/
Flair Dr

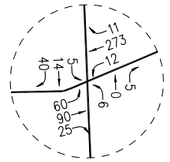

No. 15
Fletcher Ave/
Telstar Ave

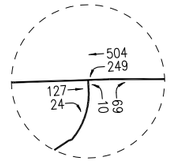

No. 16
Telstar Ave/
Flair Dr

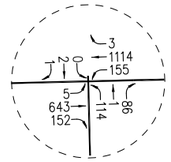

No. 17
Chico Ave/
Garvey Ave

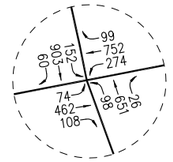

No. 18
Temple City Blvd/
Lower Azusa Rd

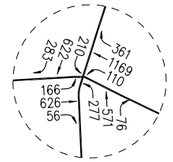

No. 19
Temple City Blvd/
Valley Blvd

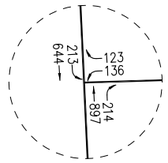

No. 20
Temple City Blvd/
Loftus Dr

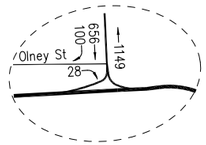

No. 21
Temple City Blvd/
I-10 WB Ramps

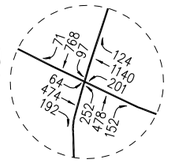

No. 22
Baldwin Ave/
Valley Blvd

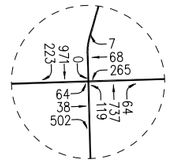

No. 23
Baldwin Ave/
Loftus Dr

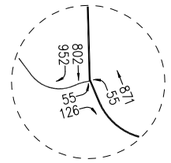

No. 24
Baldwin Ave/
Flair Dr- I-10 EB Ramps

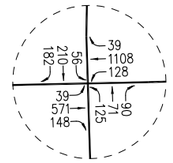

No. 25
Merced Ave/
Garvey Ave

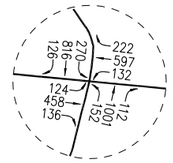

No. 26
Santa Anita Ave/
Lower Azusa Rd

No. 27
Santa Anita Ave/
Valley Blvd

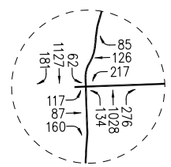

No. 28
Santa Anita Ave/
Ramona Blvd

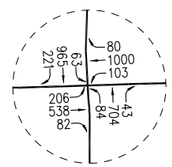

No. 29
Santa Anita Ave/
Garvey Ave

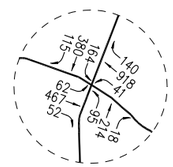

No. 30
Tyler Ave/
Valley Blvd

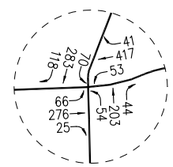

No. 31
Tyler Ave/
Ramona Blvd

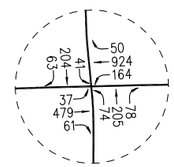

No. 32
Tyler Ave/
Garvey Ave

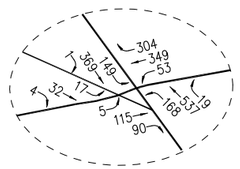

No. 33
Valley Blvd-Valley Mall/
Ramona Blvd

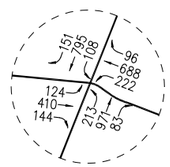

No. 34
Peck Rd/
Lower Azusa Rd

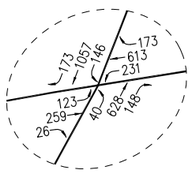

No. 35
Peck Rd/
Ramona Blvd

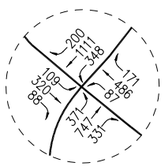

No. 36
Peck Rd/
Valley Blvd

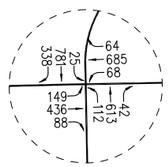

No. 37
Peck Rd/
Garvey Ave

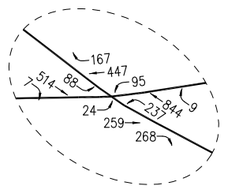

No. 38
Valley Blvd/
Garvey Ave

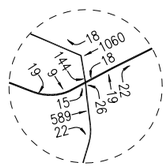

No. 39
Roseglen St-Durfee Ave/
Lower Azusa Rd

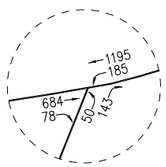

No. 40
Durfee Ave/
Ramona Blvd

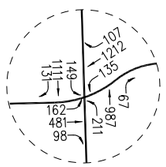

No. 41
Rosemead Blvd (SR-164)/
Las Tunas Dr

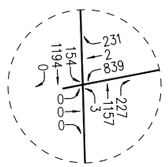

No. 42
Rosemead Blvd (SR-164)/
Lower Azusa Rd

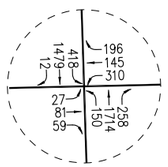

No. 43
Rosemead Blvd (SR-164)/
Rush St

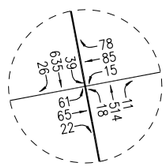

No. 44
Baldwin Ave/
Olive St

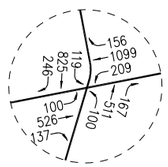

No. 45
Baldwin Ave/
Lower Azusa Rd

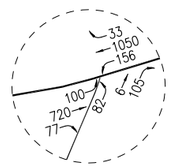

No. 46
Gilman Rd/
Ramona Blvd

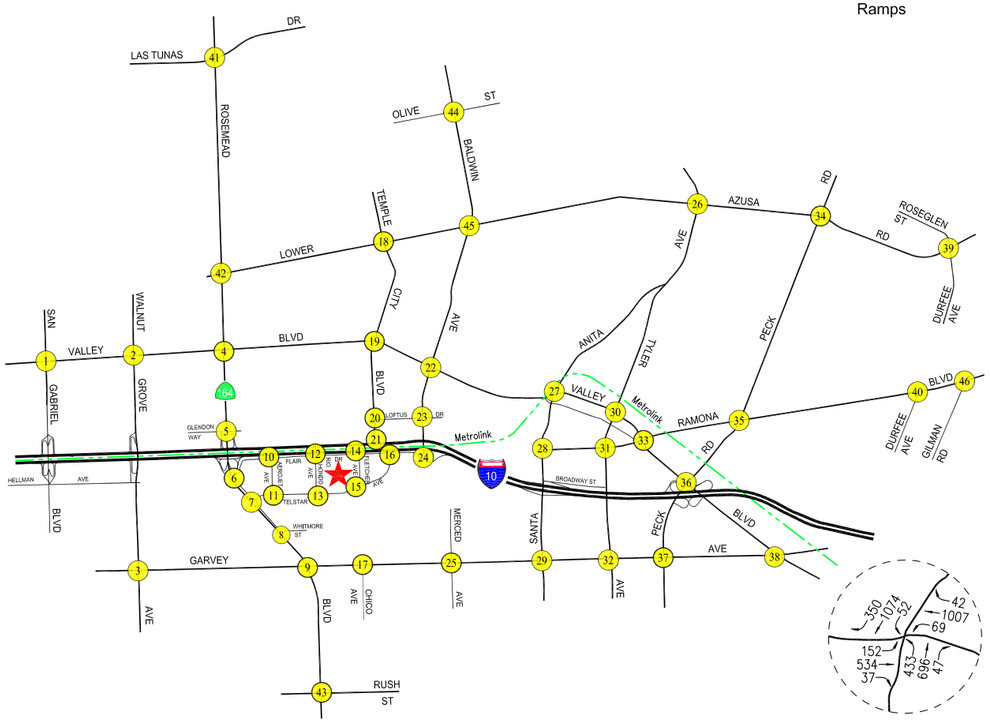

NOT TO SCALE

LINSCOTT, LAW & GREENSPAN, engineers

FIGURE 10-7

FUTURE YEAR 2016 WITH PHASE I PROJECT TRAFFIC VOLUMES

WEEKDAY AM PEAK HOUR

FLAIR SPECTRUM SPECIFIC PLAN

o:\job_file\4074\dwg\f10-7.dwg LDP 09:38:06 09/24/2014 rodriguez

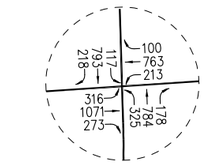

No. 1
San Gabriel Blvd/
Valley Blvd

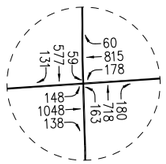

No. 2
Walnut Grove Ave/
Valley Blvd

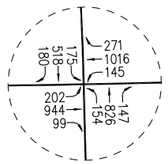

No. 3
Walnut Grove Ave/
Garvey Ave

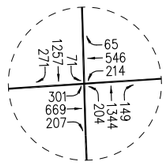

No. 4
Rosemead Blvd (SR-164)/
Valley Blvd

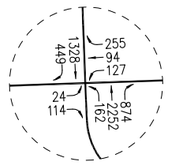

No. 5
Rosemead Blvd (SR-164)/
Glendon Way-I-10 WB
Ramps

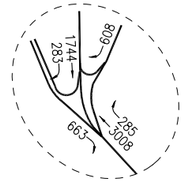

No. 6
Rosemead Blvd (SR-164)/
I-10 EB Ramps

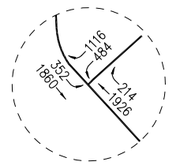

No. 7
Rosemead Blvd (SR-164)/
Telstar Ave

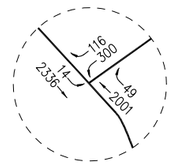

No. 8
Rosemead Blvd (SR-164)/
Whitmore St

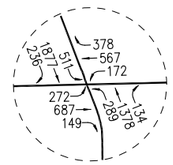

No. 9
Rosemead Blvd (SR-164)/
Garvey Ave

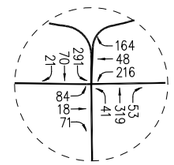

No. 10
Aerojet Ave/
Flair Dr- I-10 EB Ramps

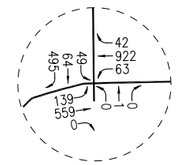

No. 11
Aerojet Ave/
Telstar Ave

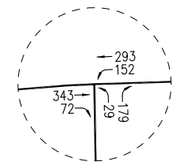

No. 12
Rio Hondo Ave/
Flair Dr

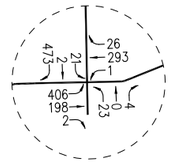

No. 13
Rio Hondo Ave/
Telstar Ave

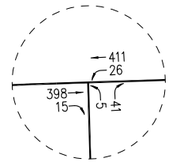

No. 14
Fletcher Ave/
Flair Dr

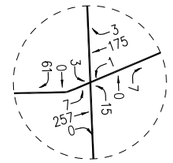

No. 15
Fletcher Ave/
Telstar Ave

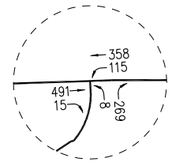

No. 16
Telstar Ave/
Flair Dr

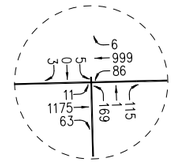

No. 17
Chico Ave/
Garvey Ave

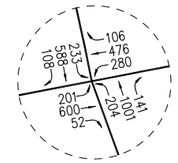

No. 18
Temple City Blvd/
Lower Azusa Rd

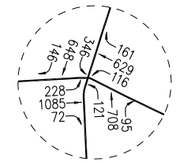

No. 19
Temple City Blvd/
Valley Blvd

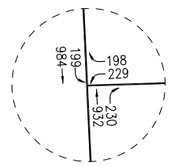

No. 20
Temple City Blvd/
Loftus Dr

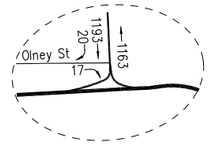

No. 21
Temple City Blvd/
I-10 WB Ramps

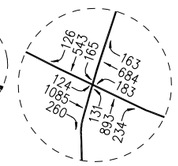

No. 22
Baldwin Ave/
Valley Blvd

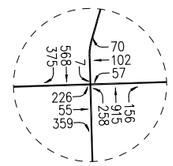

No. 23
Baldwin Ave/
Loftus Dr

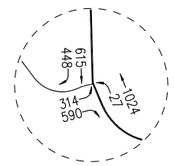

No. 24
Baldwin Ave/
Flair Dr- I-10 EB Ramps

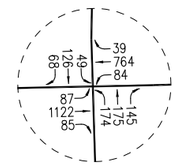

No. 25
Merced Ave/
Garvey Ave

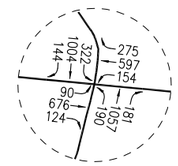

No. 26
Santa Anita Ave/
Lower Azusa Rd

No. 27
Santa Anita Ave/
Valley Blvd

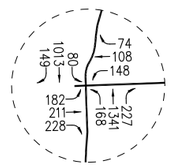

No. 28
Santa Anita Ave/
Ramona Blvd

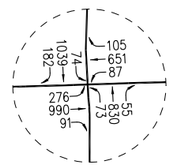

No. 29
Santa Anita Ave/
Garvey Ave

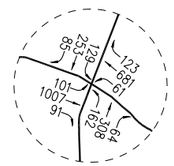

No. 30
Tyler Ave/
Valley Blvd

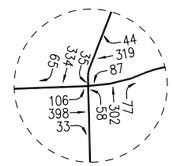

No. 31
Tyler Ave/
Ramona Blvd

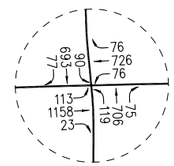

No. 32
Tyler Ave/
Garvey Ave

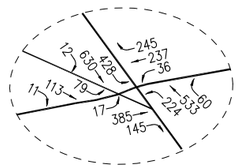

No. 33
Valley Blvd-Valley Mall/
Ramona Blvd

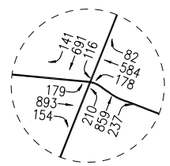

No. 34
Peck Rd/
Lower Azusa Rd

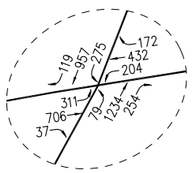

No. 35
Peck Rd/
Ramona Blvd

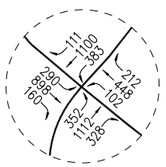

No. 36
Peck Rd/
Valley Blvd

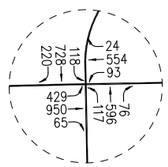

No. 37
Peck Rd/
Garvey Ave

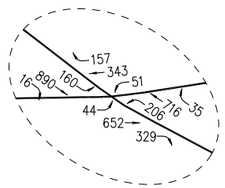

No. 38
Valley Blvd/
Garvey Ave

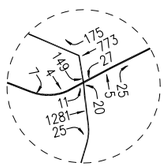

No. 39
Roseglen St-Durfee Ave/
Lower Azusa Rd

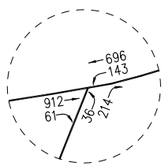

No. 40
Durfee Ave/
Ramona Blvd

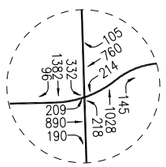

No. 41
Rosemead Blvd (SR-164)/
Las Tunas Dr

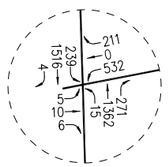

No. 42
Rosemead Blvd (SR-164)/
Lower Azusa Rd

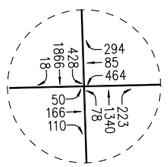

No. 43
Rosemead Blvd (SR-164)/
Rush St

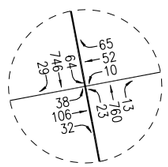

No. 44
Baldwin Ave/
Olive St

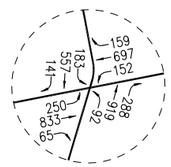

No. 45
Baldwin Ave/
Lower Azusa Rd

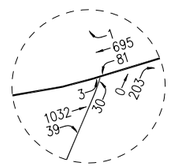

No. 46
Gilman Rd/
Ramona Blvd

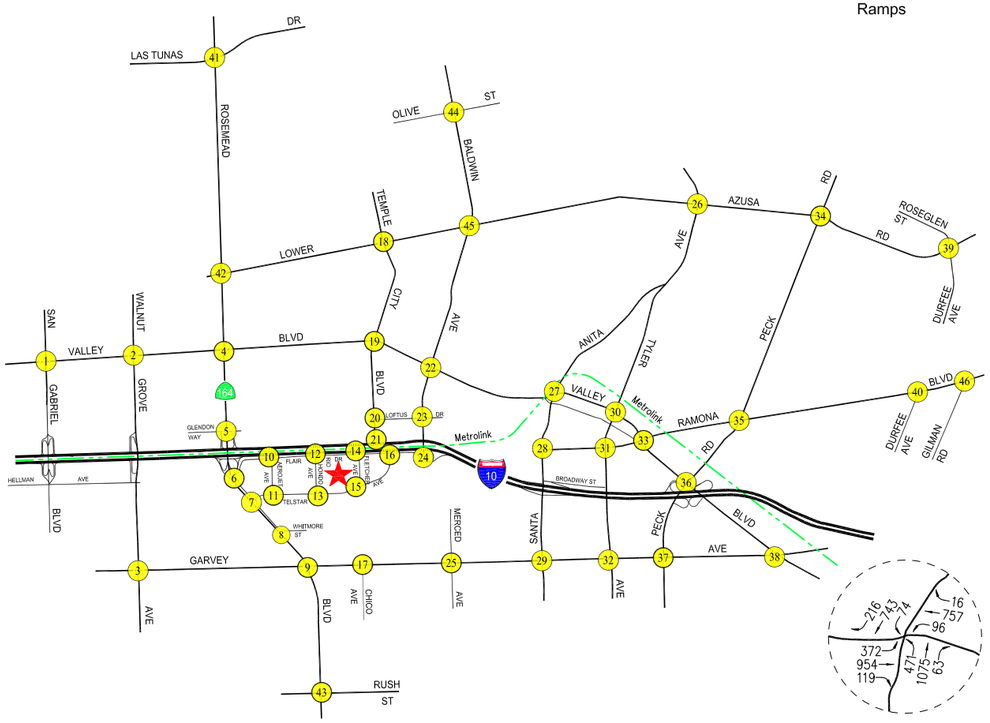

NOT TO SCALE

LINSCOTT, LAW & GREENSPAN, engineers

FIGURE 10-8

FUTURE YEAR 2016 WITH PHASE I PROJECT TRAFFIC VOLUMES

WEEKDAY PM PEAK HOUR

FLAIR SPECTRUM SPECIFIC PLAN

o:\job_file\4074\dwg\f10-8.dwg LDP 09:40:17 09/24/2014 rodriguez

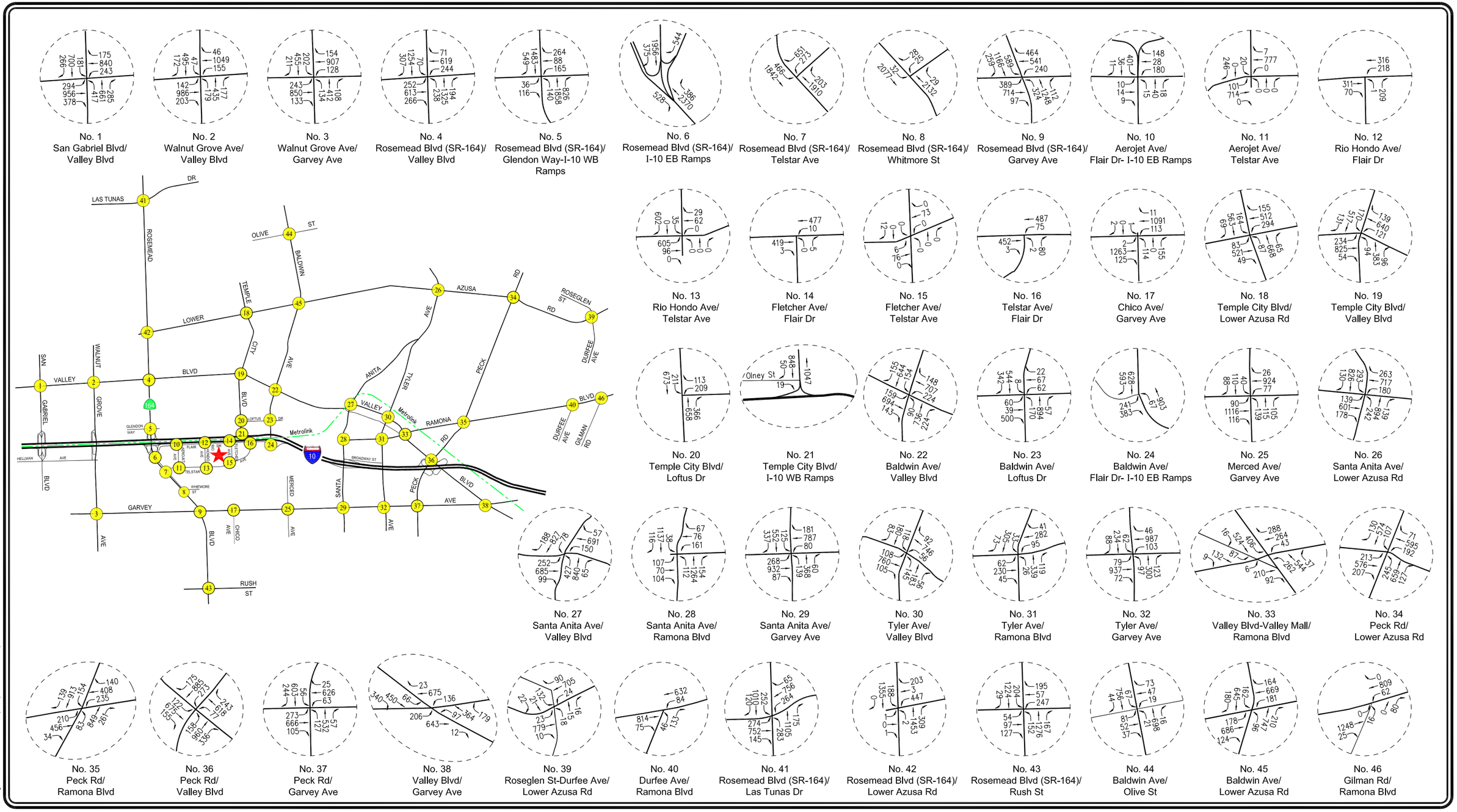

NOT TO SCALE

LINSCOTT, LAW & GREENSPAN, engineers

FIGURE 10-9

FUTURE YEAR 2016 WITH PHASE I PROJECT TRAFFIC VOLUMES

SATURDAY MID-DAY PEAK HOUR

FLAIR SPECTRUM SPECIFIC PLAN

o:\job_file\4074\dwg\f10-9.dwg LDP 09:42:59 09/24/2014 rodriguez

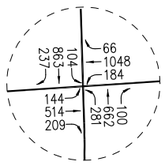

No. 1
San Gabriel Blvd/
Valley Blvd

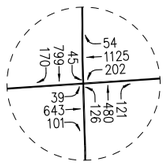

No. 2
Walnut Grove Ave/
Valley Blvd

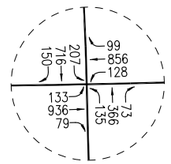

No. 3
Walnut Grove Ave/
Garvey Ave

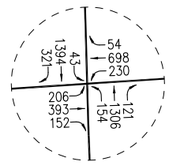

No. 4
Rosemead Blvd (SR-164)/
Valley Blvd

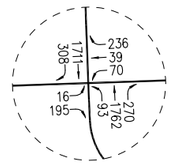

No. 5
Rosemead Blvd (SR-164)/
Glendon Way-I-10 WB
Ramps

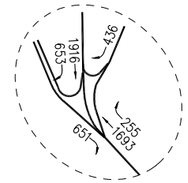

No. 6
Rosemead Blvd (SR-164)/
I-10 EB Ramps

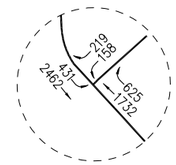

No. 7
Rosemead Blvd (SR-164)/
Telstar Ave

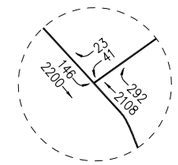

No. 8
Rosemead Blvd (SR-164)/
Whitmore St

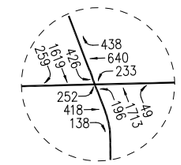

No. 9
Rosemead Blvd (SR-164)/
Garvey Ave

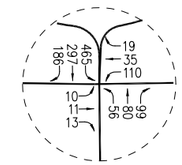

No. 10
Aerojet Ave/
Flair Dr- I-10 EB Ramps

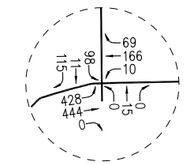

No. 11
Aerojet Ave/
Telstar Ave

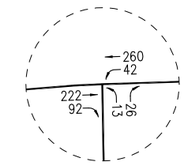

No. 12
Rio Hondo Ave/
Flair Dr

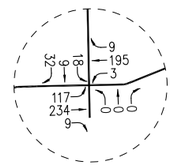

No. 13
Rio Hondo Ave/
Telstar Ave

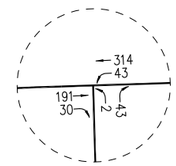

No. 14
Fletcher Ave/
Flair Dr

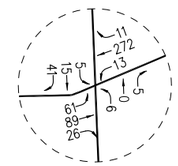

No. 15
Fletcher Ave/
Telstar Ave

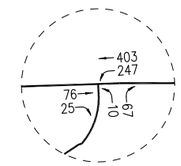

No. 16
Telstar Ave/
Flair Dr

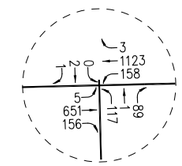

No. 17
Chico Ave/
Garvey Ave

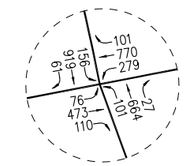

No. 18
Temple City Blvd/
Lower Azusa Rd

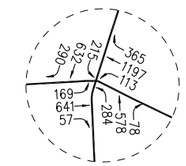

No. 19
Temple City Blvd/
Valley Blvd

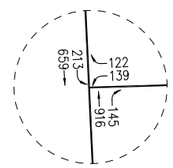

No. 20
Temple City Blvd/
Loftus Dr

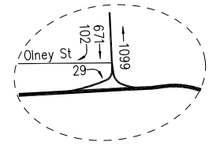

No. 21
Temple City Blvd/
I-10 WB Ramps

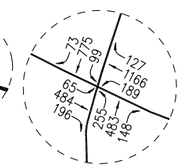

No. 22
Baldwin Ave/
Valley Blvd

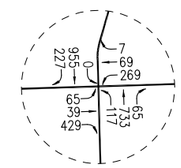

No. 23
Baldwin Ave/
Loftus Dr

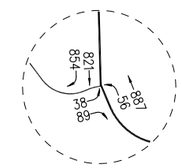

No. 24
Baldwin Ave/
Flair Dr- I-10 EB Ramps

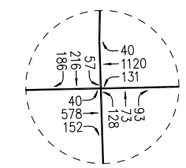

No. 25
Merced Ave/
Garvey Ave

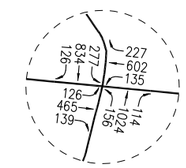

No. 26
Santa Anita Ave/
Lower Azusa Rd

No. 27
Santa Anita Ave/
Valley Blvd

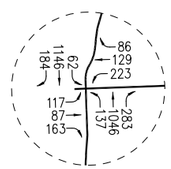

No. 28
Santa Anita Ave/
Ramona Blvd

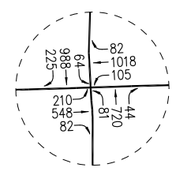

No. 29
Santa Anita Ave/
Garvey Ave

No. 30
Tyler Ave/
Valley Blvd

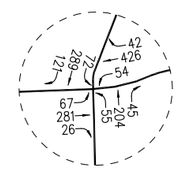

No. 31
Tyler Ave/
Ramona Blvd

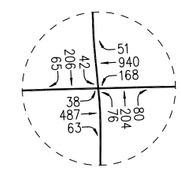

No. 32
Tyler Ave/
Garvey Ave

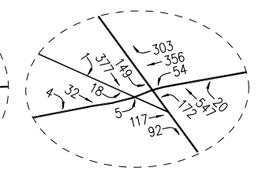

No. 33
Valley Blvd-Valley Mall/
Ramona Blvd

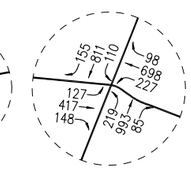

No. 34
Peck Rd/
Lower Azusa Rd

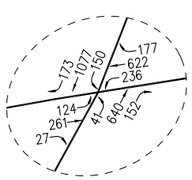

No. 35
Peck Rd/
Ramona Blvd

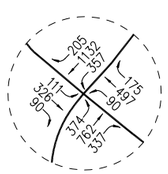

No. 36
Peck Rd/
Valley Blvd

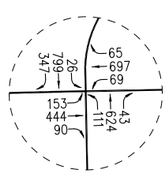

No. 37
Peck Rd/
Garvey Ave

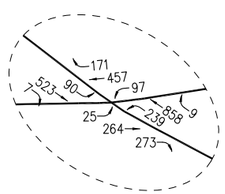

No. 38
Valley Blvd/
Garvey Ave

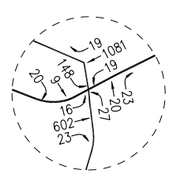

No. 39
Roseglen St-Durfee Ave/
Lower Azusa Rd

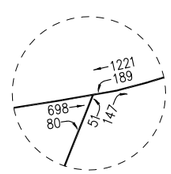

No. 40
Durfee Ave/
Ramona Blvd

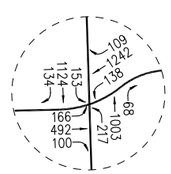

No. 41
Rosemead Blvd (SR-164)/
Las Tunas Dr

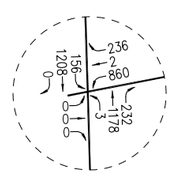

No. 42
Rosemead Blvd (SR-164)/
Lower Azusa Rd

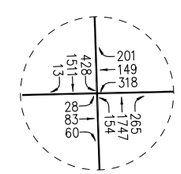

No. 43
Rosemead Blvd (SR-164)/
Rush St

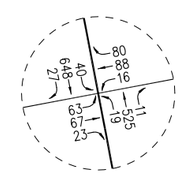

No. 44
Baldwin Ave/
Olive St

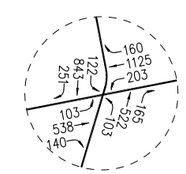

No. 45
Baldwin Ave/
Lower Azusa Rd

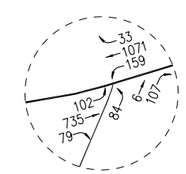

No. 46
Gilman Rd/
Ramona Blvd

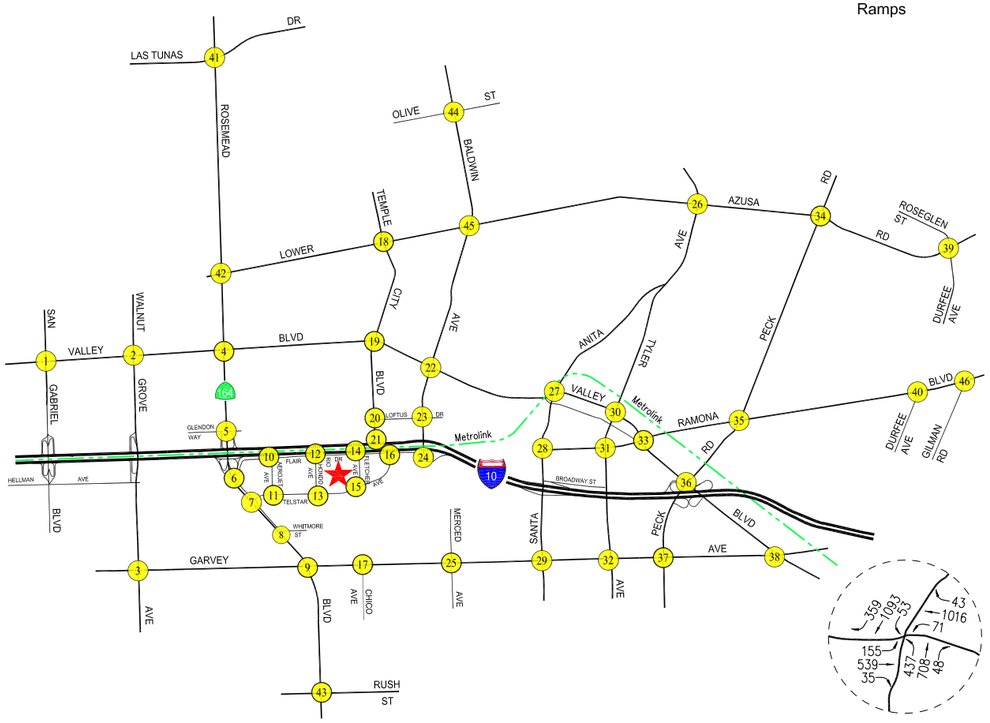

★ PROJECT SITE

N

NOT TO SCALE

FIGURE 10-10

FUTURE YEAR 2019 WITHOUT PROJECT TRAFFIC VOLUMES

WEEKDAY AM PEAK HOUR

FLAIR SPECTRUM SPECIFIC PLAN

LINSCOTT, LAW & GREENSPAN, engineers

o:\job_file\4074\dwg\f10-10.dwg LDP 09:44:51 09/24/2014 rodriguez

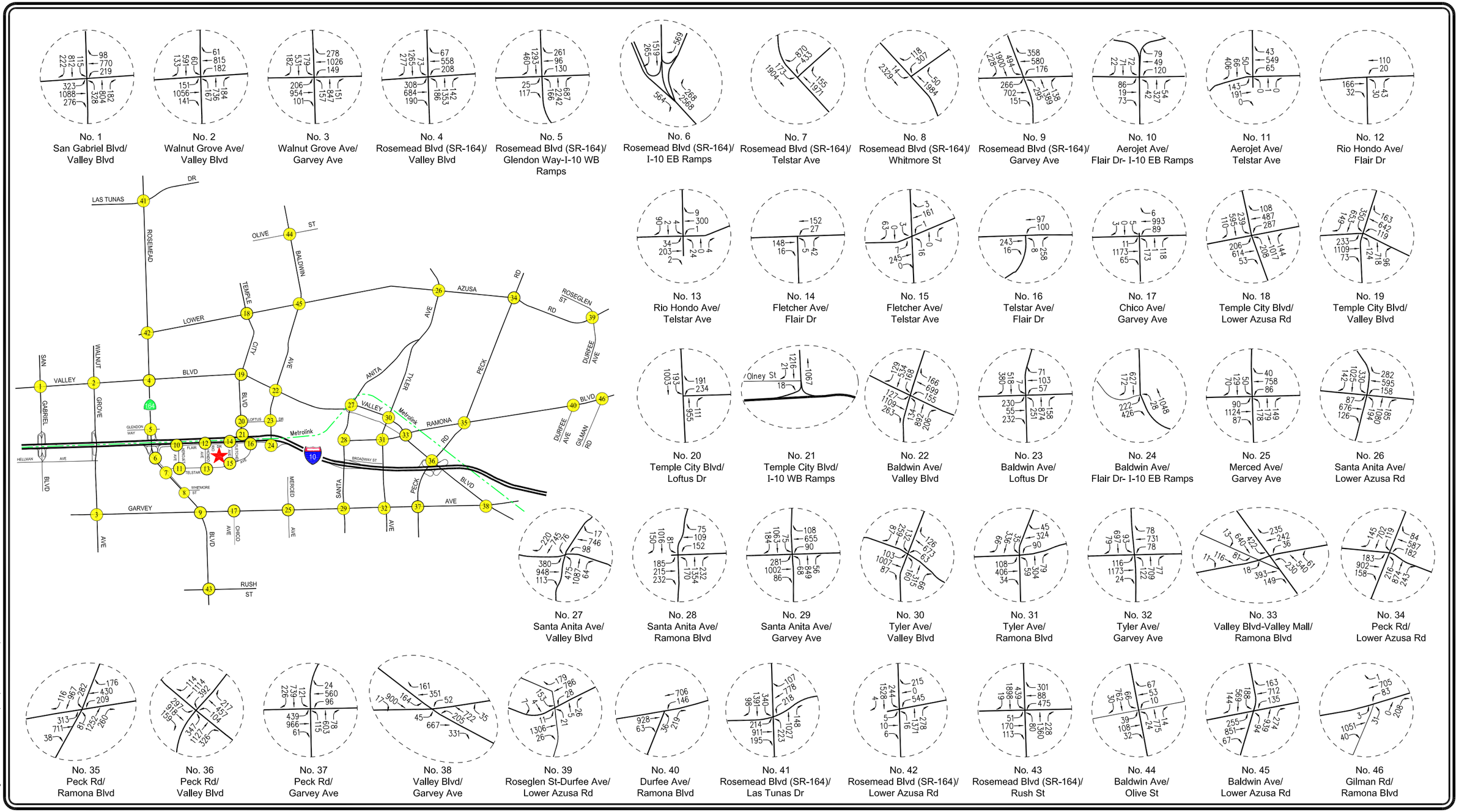

PROJECT SITE

NOT TO SCALE

FIGURE 10-11

FUTURE YEAR 2019 WITHOUT PROJECT TRAFFIC VOLUMES

WEEKDAY PM PEAK HOUR

FLAIR SPECTRUM SPECIFIC PLAN

LINSCOTT, LAW & GREENSPAN, engineers

o:\job_file\4074\dwg\f10-11.dwg LDP 09:48:23 09/24/2014 rodriguez

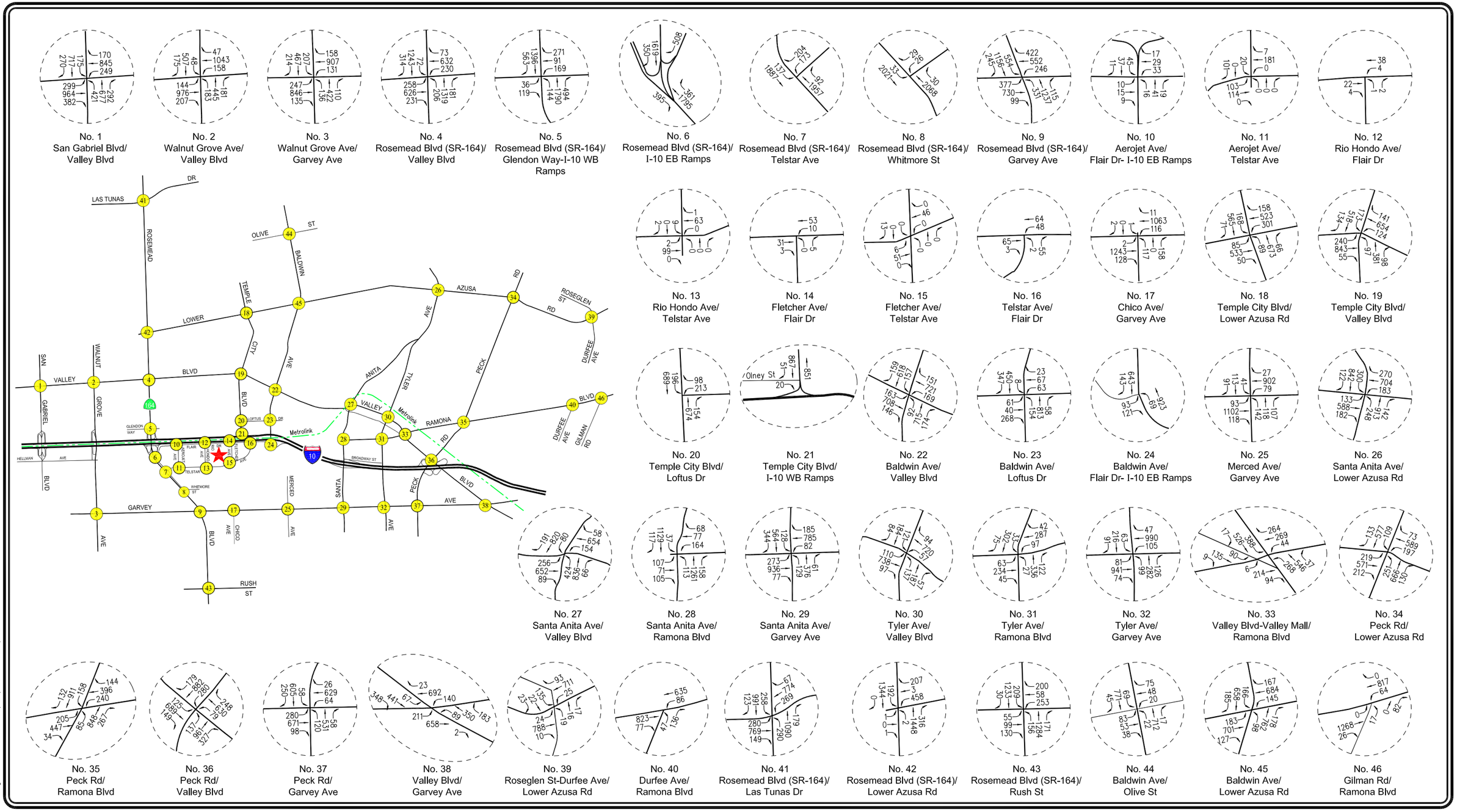

FIGURE 10-12

FUTURE YEAR 2019 WITHOUT PROJECT TRAFFIC VOLUMES

SATURDAY MID-DAY PEAK HOUR

FLAIR SPECTRUM SPECIFIC PLAN

LINSCOTT, LAW & GREENSPAN, engineers

o:\job_file\4074\dwg\f10-12.dwg LDP 10:00:49 09/24/2014 rodriguez

10.3.2 Future Year 2019 With Project Build-out Conditions

As shown in column [2] of *Table 10-3*, application of the City of El Monte's threshold criteria to the "Future Year 2019 With Project Build-out" scenario indicates that the proposed project (i.e., build-out of Phases I and II) is expected to create a significant impact at 8 of the 31 City of El Monte study intersections during the weekday AM peak hour, weekday PM peak hour and/or the Saturday mid-day peak hour. The project at build-out is expected to create significant impacts at the following locations according to the City of El Monte's impact criteria during the peak hour(s) shown below:

• Int. No. 7: Rosemead Boulevard/Telstar Avenue	Weekday PM Peak Hour
• Int. No. 10: Aerojet Ave.-I-10 EB Ramps/Flair Drive	Weekday PM Peak Hour
• Int. No. 11: Aerojet Avenue/Telstar Avenue	Weekday AM Peak Hour
	Weekday PM Peak Hour
	Saturday Mid-day Peak Hour
• Int. No. 13: Rio Hondo Avenue/Telstar Avenue	Weekday PM Peak Hour
	Saturday Mid-day Peak Hour
• Int. No. 16: Telstar Avenue/Flair Drive	Weekday PM Peak Hour
• Int. No. 23: Baldwin Avenue/Loftus Drive	Weekday AM Peak Hour
	Weekday PM Peak Hour
• Int. No. 24: Baldwin Avenue/Flair Dr.-I-10 EB Ramps	Weekday AM Peak Hour
	Weekday PM Peak Hour
	Saturday Mid-day Peak Hour
• Int. No. 40: Durfee Avenue/Ramona Boulevard	Weekday AM Peak Hour
	Weekday PM Peak Hour

Incremental but not significant impacts are noted at the remaining study intersections. The future year 2019 with project build-out (existing, ambient growth to year 2019, related projects, and project build-out) traffic volumes at the study intersections during the weekday AM peak hour, weekday PM peak hour and Saturday mid-day peak hour are provided in ***Figures 10-13***, ***10-14*** and ***10-15***, respectively.

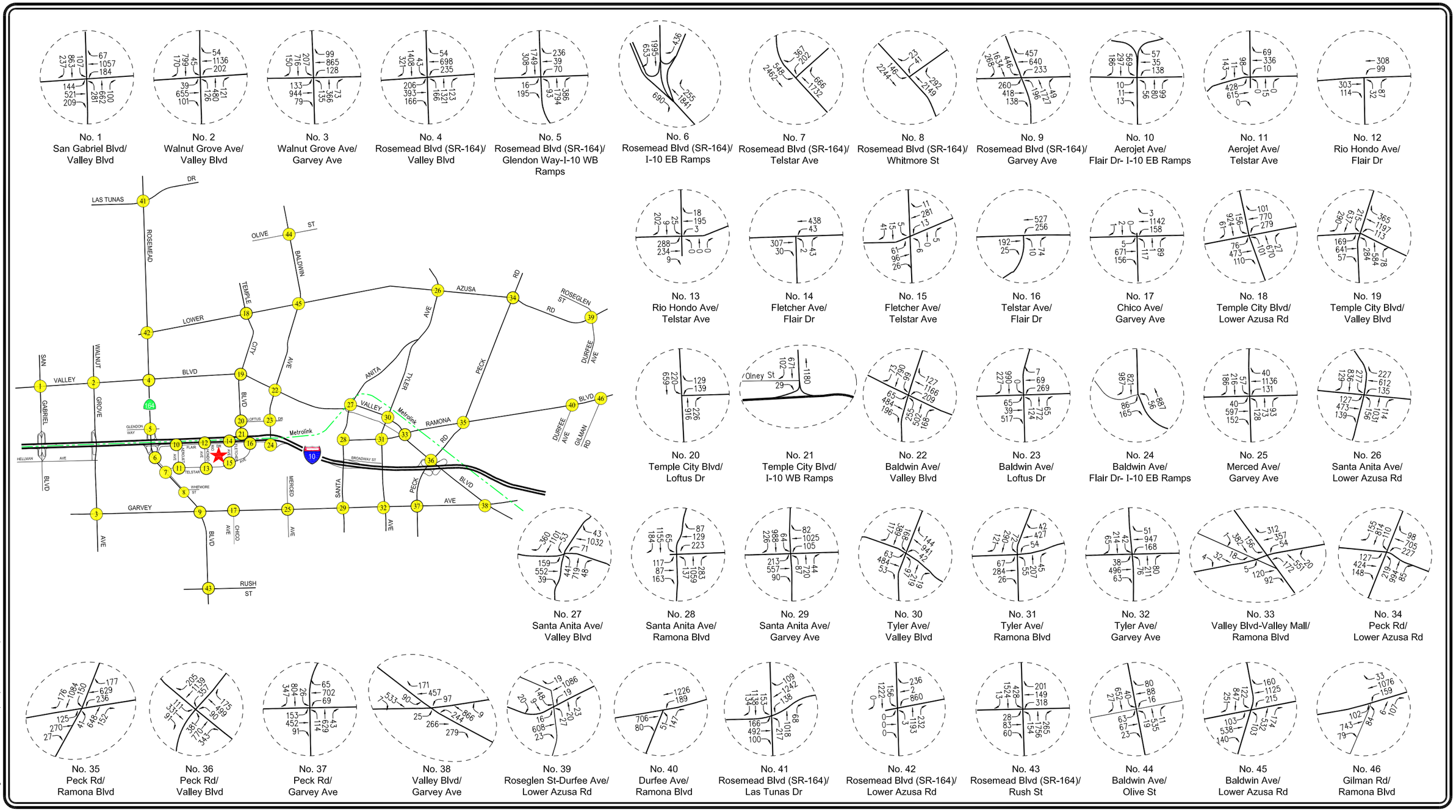

NOT TO SCALE

LINSCOTT, LAW & GREENSPAN, engineers

FIGURE 10-13

FUTURE YEAR 2019 WITH PROJECT BUILD-OUT TRAFFIC VOLUMES

WEEKDAY AM PEAK HOUR

FLAIR SPECTRUM SPECIFIC PLAN

o:\job_file\4074\dwg\f10-13.dwg LDP 10:13:55 09/24/2014 rodriguez

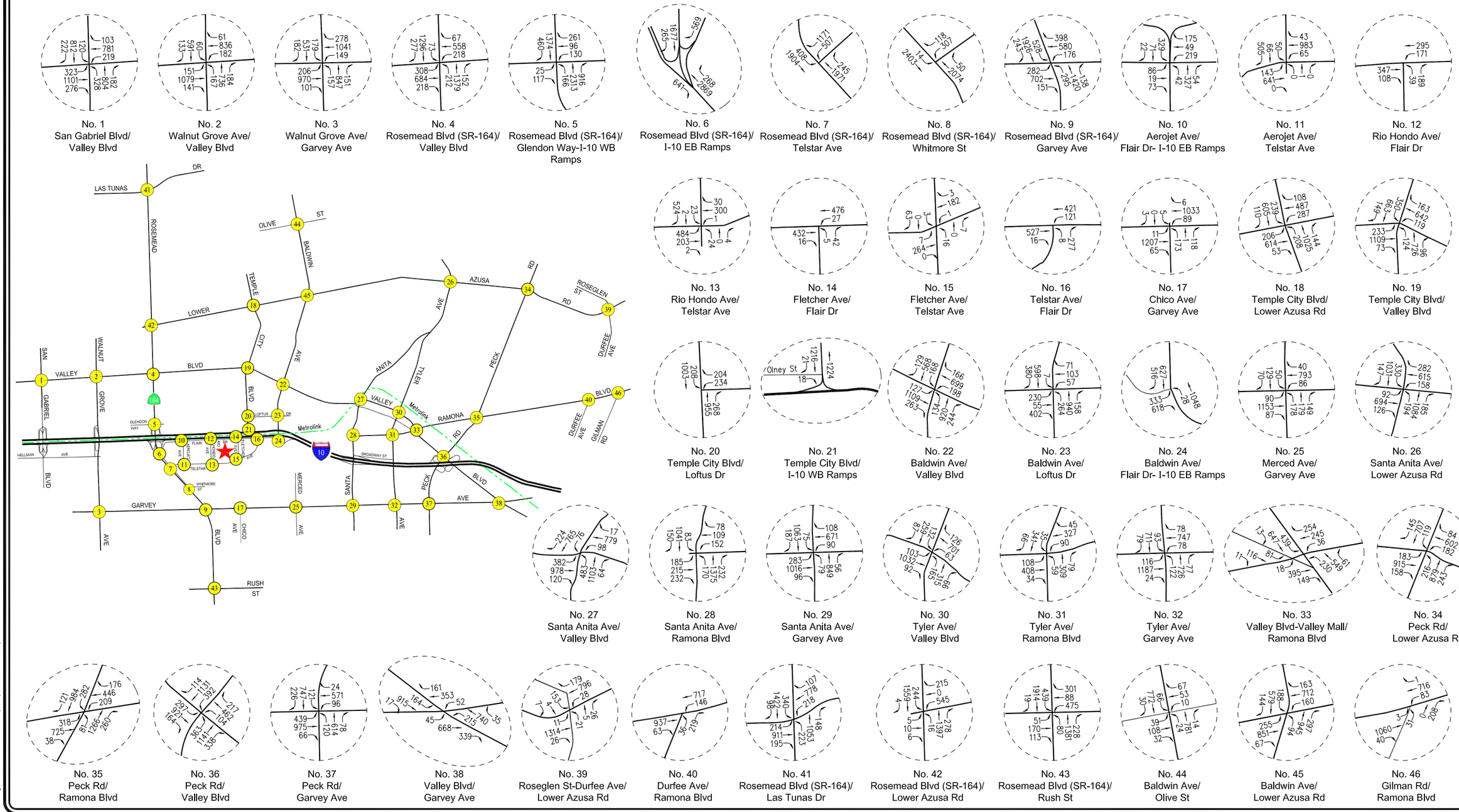

NOT TO SCALE

LINSCOTT, LAW & GREENSPAN, engineers

FIGURE 10-14

FUTURE YEAR 2019 WITH PROJECT BUILD-OUT TRAFFIC VOLUMES

WEEKDAY PM PEAK HOUR

FLAIR SPECTRUM SPECIFIC PLAN

o:\job_file\4074\dwg\f10-14.dwg LDP 10:39:22 10/03/2014 rodriguez

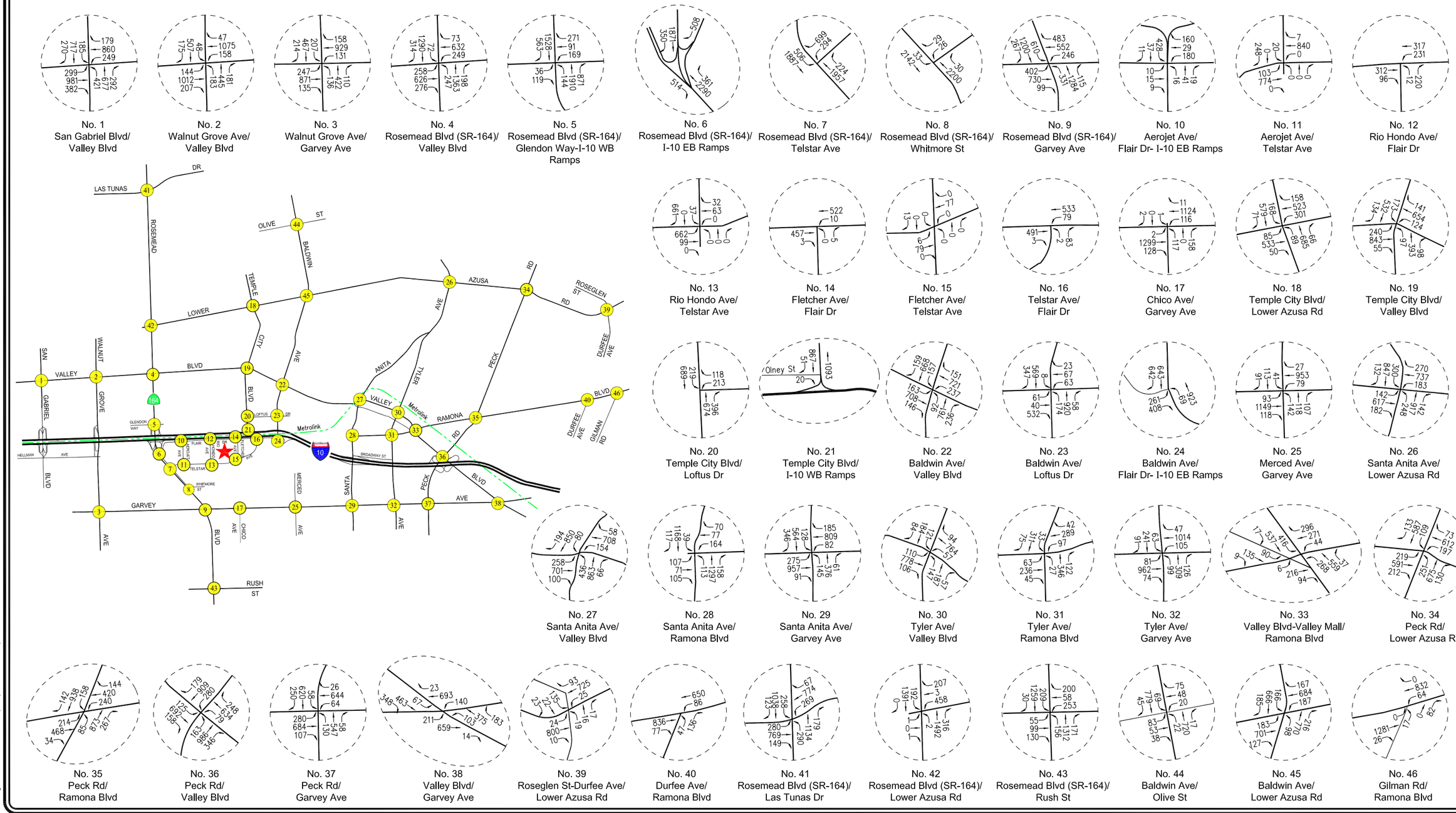

NOT TO SCALE

LINSCOTT, LAW & GREENSPAN, engineers

FIGURE 10-15

FUTURE YEAR 2019 WITH PROJECT BUILD-OUT TRAFFIC VOLUMES

SATURDAY MID-DAY PEAK HOUR

FLAIR SPECTRUM SPECIFIC PLAN

o:\job_file\4074\dwg\f10-15.dwg LDP 10:25:09 09/24/2014 rodriguez

10.4 Future Year 2035 Conditions

10.4.1 Future Year 2035 Without Project Conditions

The future year 2035 without project conditions were forecast based on the addition of traffic generated by the completion and occupancy of related projects, as well as the growth in traffic due to the combined effects of continuing development, intensification of existing developments and other factors (i.e., ambient growth to year 2035). The *v/c* ratios and delay at all of the study intersections are incrementally increased with the addition of ambient traffic and traffic generated by the related projects listed in *Table 7–1*. As presented in column [1] of *Table 10–4*, 15 of the 31 City of El Monte study intersections are expected to operate at LOS D or better during the weekday AM and PM peak hours with the addition of growth in ambient traffic and related projects traffic under the future without project conditions. The remaining study intersections are expected to operate at LOS E or F during the weekday AM peak hour, weekday PM peak hour and/or the Saturday mid-day peak hour under the future year 2035 without project conditions as shown in *Table 10-4*. The future year 2035 without project (existing, ambient growth to year 2035 and related projects) traffic volumes at the study intersections during the weekday AM peak hour, weekday PM peak hour and Saturday mid-day peak hour are provided in ***Figures 10-16***, ***10-17*** and ***10-18***, respectively.

10.4.2 Future Year 2035 With Project Build-out Conditions

As shown in column [2] of *Table 10-4*, application of the City of El Monte's threshold criteria to the "Future Year 2035 With Project Build-out" scenario indicates that the proposed project (i.e., build-out of Phases I and II) is expected to create a significant impact at 10 of the 31 City of El Monte study intersections during the weekday AM peak hour, weekday PM peak hour and/or the Saturday mid-day peak hour. The project at build-out is expected to create significant impacts at the following locations according to the City of El Monte's impact criteria during the peak hour(s) shown below:

• Int. No. 7: Rosemead Boulevard/Telstar Avenue	Weekday PM Peak Hour
• Int. No. 10: Aerojet Ave.-I-10 EB Ramps/Flair Drive	Weekday PM Peak Hour
• Int. No. 11: Aerojet Avenue/Telstar Avenue	Weekday AM Peak Hour
	Weekday PM Peak Hour
	Saturday Mid-day Peak Hour
• Int. No. 13: Rio Hondo Avenue/Telstar Avenue	Weekday PM Peak Hour
	Saturday Mid-day Peak Hour
• Int. No. 16: Telstar Avenue/Flair Avenue	Weekday PM Peak Hour
• Int. No. 22: Baldwin Avenue/Valley Boulevard	Weekday PM Peak Hour

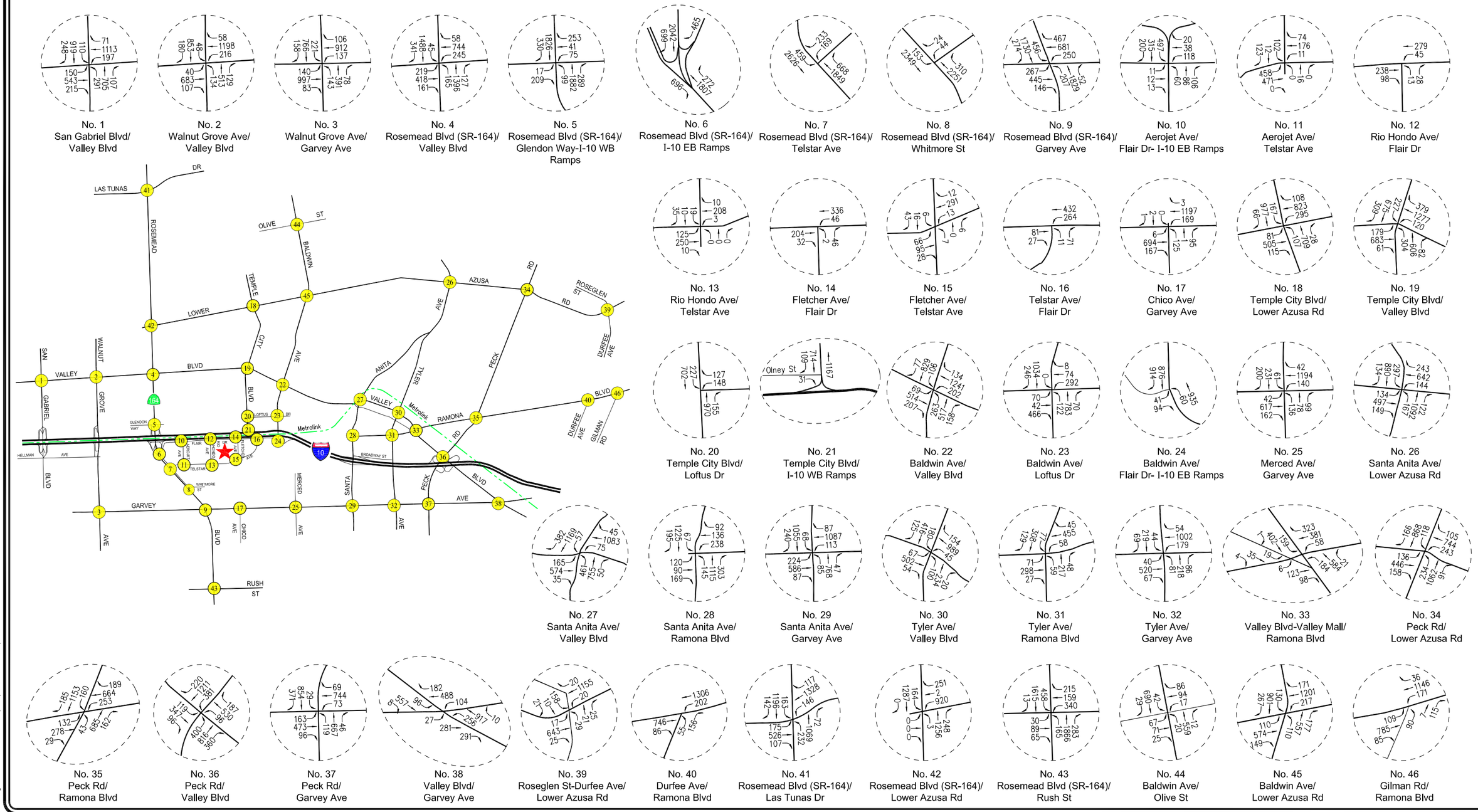

PROJECT SITE

NOT TO SCALE

FIGURE 10-16

FUTURE YEAR 2035 WITHOUT PROJECT TRAFFIC VOLUMES

WEEKDAY AM PEAK HOUR

FLAIR SPECTRUM SPECIFIC PLAN

LINSCOTT, LAW & GREENSPAN, engineers

o:\job_file\4074\dwg\f10-16.dwg LDP 10:05:06 09/24/2014 rodriguez

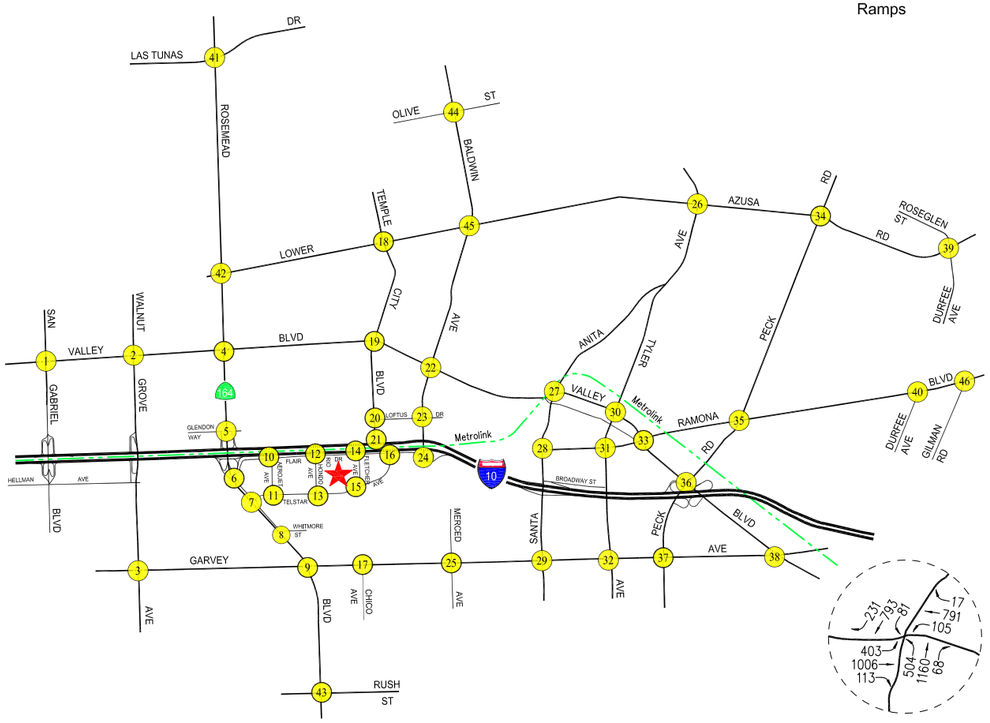

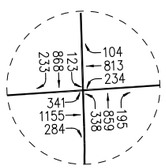

No. 1
San Gabriel Blvd/
Valley Blvd

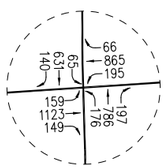

No. 2
Walnut Grove Ave/
Valley Blvd

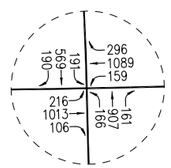

No. 3
Walnut Grove Ave/
Garvey Ave

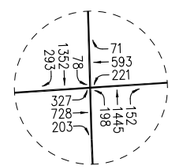

No. 4
Rosemead Blvd (SR-164)/
Valley Blvd

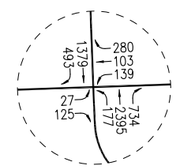

No. 5
Rosemead Blvd (SR-164)/
Glendon Way-I-10 WB
Ramps

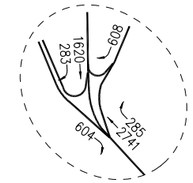

No. 6
Rosemead Blvd (SR-164)/
I-10 EB Ramps

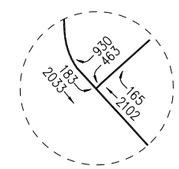

No. 7
Rosemead Blvd (SR-164)/
Telstar Ave

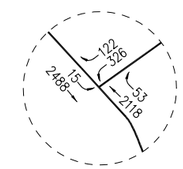

No. 8
Rosemead Blvd (SR-164)/
Whitmore St

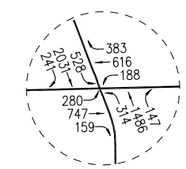

No. 9
Rosemead Blvd (SR-164)/
Garvey Ave

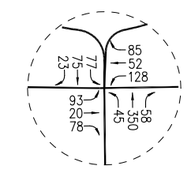

No. 10
Aerojet Ave/
Flair Dr- I-10 EB Ramps

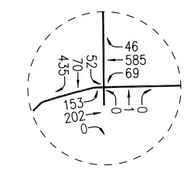

No. 11
Aerojet Ave/
Telstar Ave

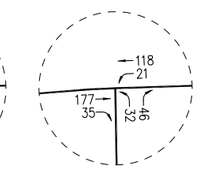

No. 12
Rio Hondo Ave/
Flair Dr

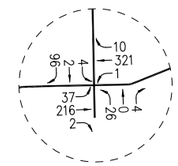

No. 13
Rio Hondo Ave/
Telstar Ave

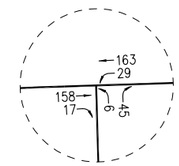

No. 14
Fletcher Ave/
Flair Dr

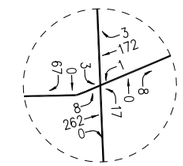

No. 15
Fletcher Ave/
Telstar Ave

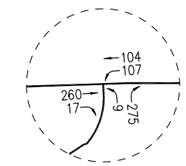

No. 16
Telstar Ave/
Flair Dr

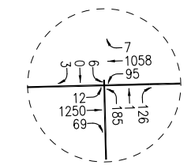

No. 17
Chico Ave/
Garvey Ave

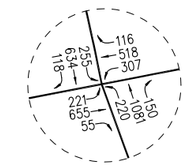

No. 18
Temple City Blvd/
Lower Azusa Rd

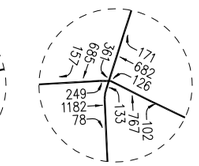

No. 19
Temple City Blvd/
Valley Blvd

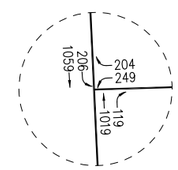

No. 20
Temple City Blvd/
Loftus Dr

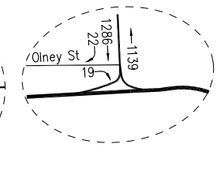

No. 21
Temple City Blvd/
I-10 WB Ramps

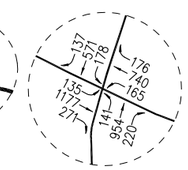

No. 22
Baldwin Ave/
Valley Blvd

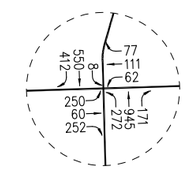

No. 23
Baldwin Ave/
Loftus Dr

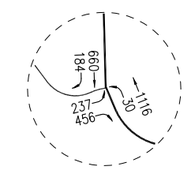

No. 24
Baldwin Ave/
Flair Dr- I-10 EB Ramps

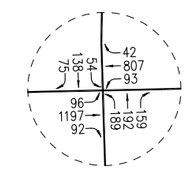

No. 25
Merced Ave/
Garvey Ave

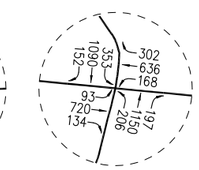

No. 26
Santa Anita Ave/
Lower Azusa Rd

No. 27
Santa Anita Ave/
Valley Blvd

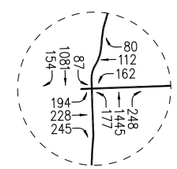

No. 28
Santa Anita Ave/
Ramona Blvd

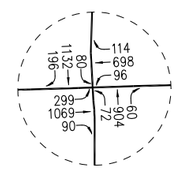

No. 29
Santa Anita Ave/
Garvey Ave

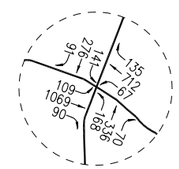

No. 30
Tyler Ave/
Valley Blvd

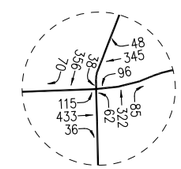

No. 31
Tyler Ave/
Ramona Blvd

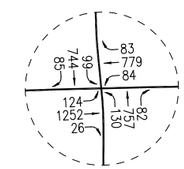

No. 32
Tyler Ave/
Garvey Ave

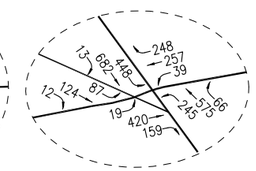

No. 33
Valley Blvd-Valley Mall/
Ramona Blvd

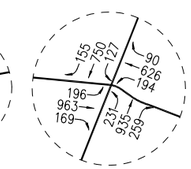

No. 34
Peck Rd/
Lower Azusa Rd

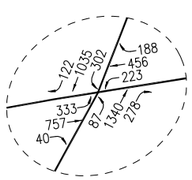

No. 35
Peck Rd/
Ramona Blvd

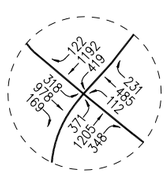

No. 36
Peck Rd/
Valley Blvd

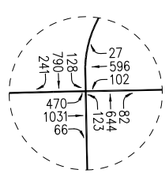

No. 37
Peck Rd/
Garvey Ave

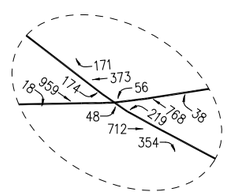

No. 38
Valley Blvd/
Garvey Ave

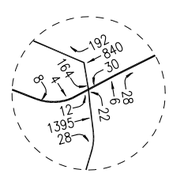

No. 39
Roseglen St-Durfee Ave/
Lower Azusa Rd

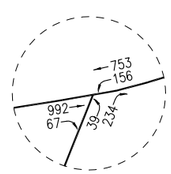

No. 40
Durfee Ave/
Ramona Blvd

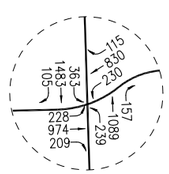

No. 41
Rosemead Blvd (SR-164)/
Las Tunas Dr

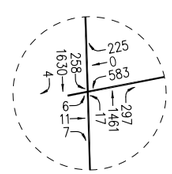

No. 42
Rosemead Blvd (SR-164)/
Lower Azusa Rd

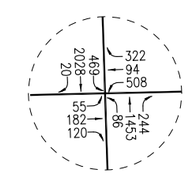

No. 43
Rosemead Blvd (SR-164)/
Rush St

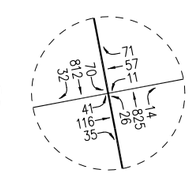

No. 44
Baldwin Ave/
Olive St

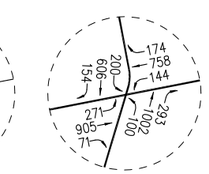

No. 45
Baldwin Ave/
Lower Azusa Rd

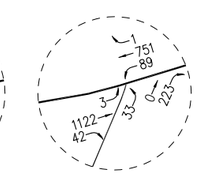

No. 46
Gilman Rd/
Ramona Blvd

N

NOT TO SCALE

★ PROJECT SITE

LINSCOTT, LAW & GREENSPAN, engineers

FIGURE 10-17

FUTURE YEAR 2035 WITHOUT PROJECT TRAFFIC VOLUMES

WEEKDAY PM PEAK HOUR

FLAIR SPECTRUM SPECIFIC PLAN

o:\job_file\4074\dwg\f10-17.dwg LDP 10:07:18 09/24/2014 rodriguez

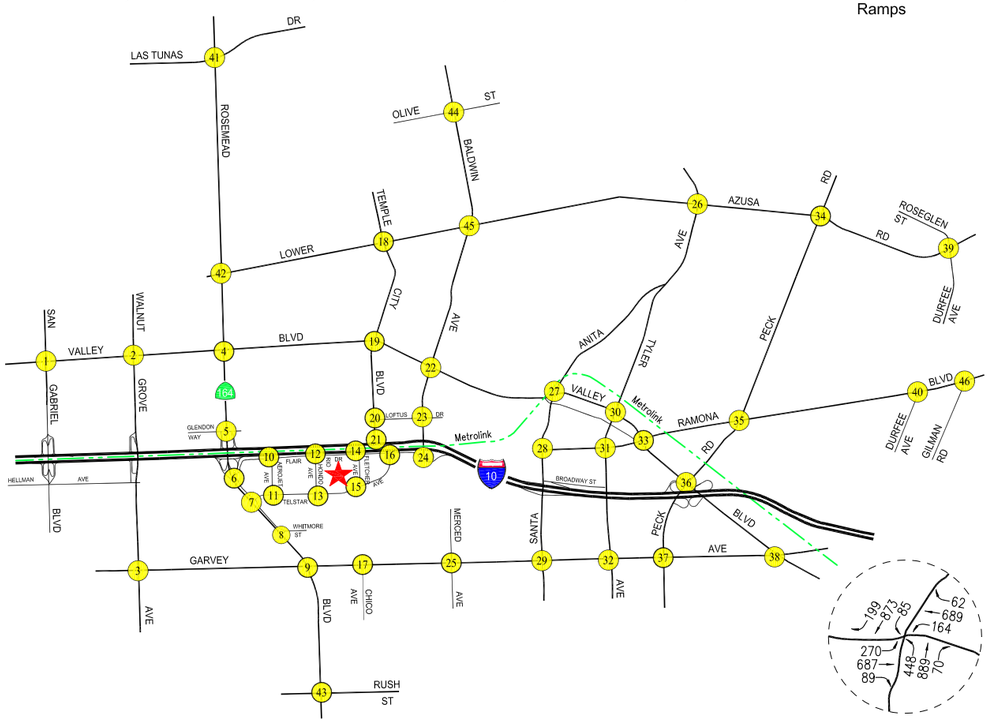

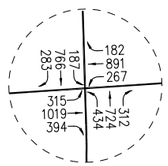

No. 1
San Gabriel Blvd/
Valley Blvd

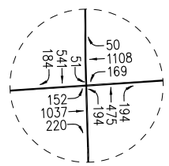

No. 2
Walnut Grove Ave/
Valley Blvd

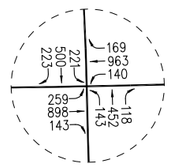

No. 3
Walnut Grove Ave/
Garvey Ave

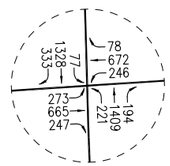

No. 4
Rosemead Blvd (SR-164)/
Valley Blvd

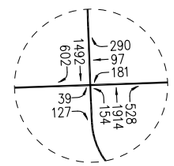

No. 5
Rosemead Blvd (SR-164)/
Glendon Way-I-10 WB
Ramps

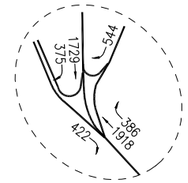

No. 6
Rosemead Blvd (SR-164)/
I-10 EB Ramps

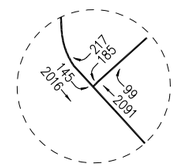

No. 7
Rosemead Blvd (SR-164)/
Telstar Ave

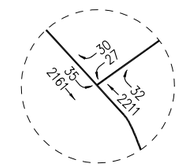

No. 8
Rosemead Blvd (SR-164)/
Whitmore St

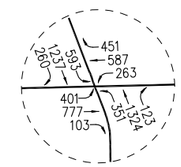

No. 9
Rosemead Blvd (SR-164)/
Garvey Ave

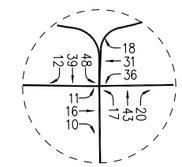

No. 10
Aerojet Ave/
Flair Dr- I-10 EB Ramps

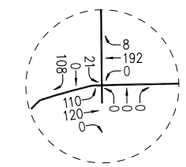

No. 11
Aerojet Ave/
Telstar Ave

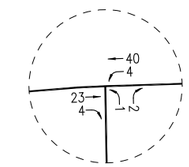

No. 12
Rio Hondo Ave/
Flair Dr

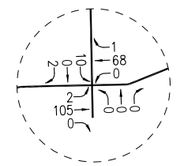

No. 13
Rio Hondo Ave/
Telstar Ave

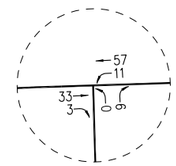

No. 14
Fletcher Ave/
Flair Dr

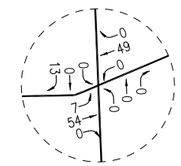

No. 15
Fletcher Ave/
Telstar Ave

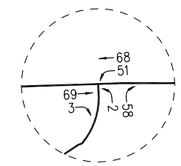

No. 16
Telstar Ave/
Flair Dr

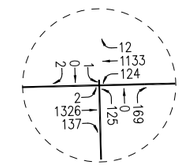

No. 17
Chico Ave/
Garvey Ave

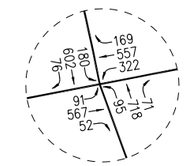

No. 18
Temple City Blvd/
Lower Azusa Rd

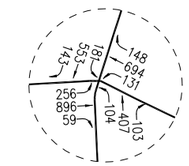

No. 19
Temple City Blvd/
Valley Blvd

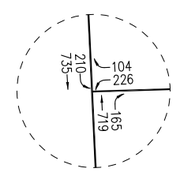

No. 20
Temple City Blvd/
Loftus Dr

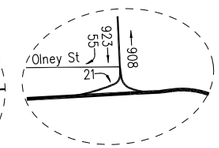

No. 21
Temple City Blvd/
I-10 WB Ramps

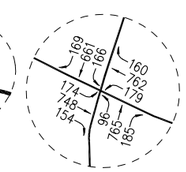

No. 22
Baldwin Ave/
Valley Blvd

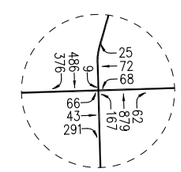

No. 23
Baldwin Ave/
Loftus Dr

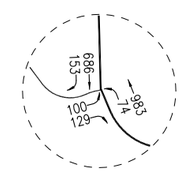

No. 24
Baldwin Ave/
Flair Dr- I-10 EB Ramps

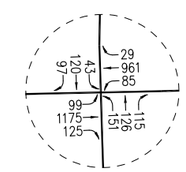

No. 25
Merced Ave/
Garvey Ave

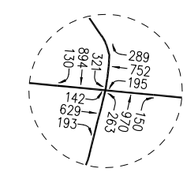

No. 26
Santa Anita Ave/
Lower Azusa Rd

No. 27
Santa Anita Ave/
Valley Blvd

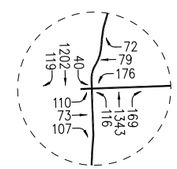

No. 28
Santa Anita Ave/
Ramona Blvd

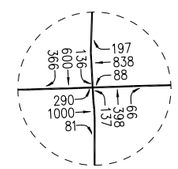

No. 29
Santa Anita Ave/
Garvey Ave

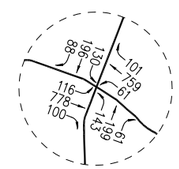

No. 30
Tyler Ave/
Valley Blvd

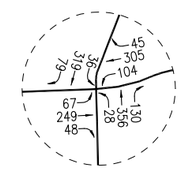

No. 31
Tyler Ave/
Ramona Blvd

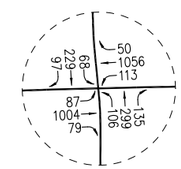

No. 32
Tyler Ave/
Garvey Ave

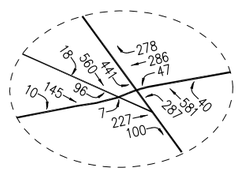

No. 33
Valley Blvd-Valley Mall/
Ramona Blvd

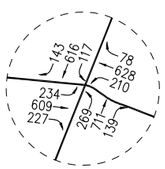

No. 34
Peck Rd/
Lower Azusa Rd

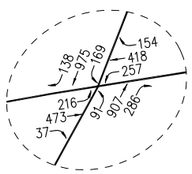

No. 35
Peck Rd/
Ramona Blvd

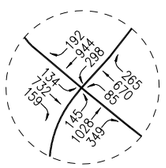

No. 36
Peck Rd/
Valley Blvd

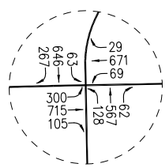

No. 37
Peck Rd/
Garvey Ave

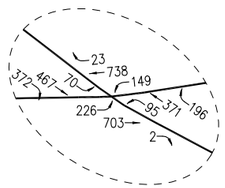

No. 38
Valley Blvd/
Garvey Ave

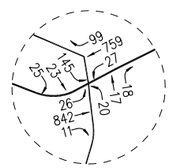

No. 39
Roseglen St-Durfee Ave/
Lower Azusa Rd

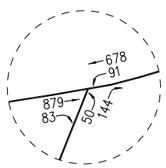

No. 40
Durfee Ave/
Ramona Blvd

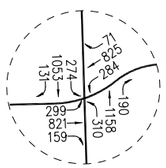

No. 41
Rosemead Blvd (SR-164)/
Las Tunas Dr

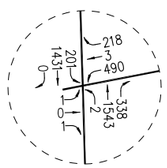

No. 42
Rosemead Blvd (SR-164)/
Lower Azusa Rd

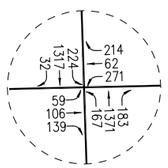

No. 43
Rosemead Blvd (SR-164)/
Rush St

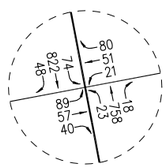

No. 44
Baldwin Ave/
Olive St

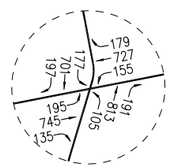

No. 45
Baldwin Ave/
Lower Azusa Rd

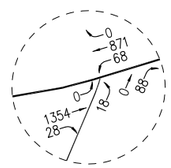

No. 46
Gilman Rd/
Ramona Blvd

o:\job_file\4074\dwg\f10-18.dwg LDP 16:43:32 09/29/2014 rodriguez

N

NOT TO SCALE

★ PROJECT SITE

LINSCOTT, LAW & GREENSPAN, engineers

FIGURE 10-18

FUTURE YEAR 2035 WITHOUT PROJECT TRAFFIC VOLUMES

SATURDAY MID-DAY PEAK HOUR

FLAIR SPECTRUM SPECIFIC PLAN

- Int. No. 23: Baldwin Avenue/Loftus Drive — Weekday AM Peak Hour
  Weekday PM Peak Hour
  Saturday Mid-day Peak Hour
- Int. No. 24: Baldwin Avenue/Flair Dr.-I-10 EB Ramps — Weekday AM Peak Hour
  Weekday PM Peak Hour
  Saturday Mid-day Peak Hour
- Int. No. 27: Santa Anita Avenue/Valley Boulevard — Weekday PM Peak Hour
- Int. No. 40: Durfee Avenue/Ramona Boulevard — Weekday AM Peak Hour
  Weekday PM Peak Hour

Incremental but not significant impacts are noted at the remaining study intersections. The future year 2035 with project build-out (existing, ambient growth to year 2035, related projects, and project build-out) traffic volumes at the study intersections during the weekday AM peak hour, weekday PM peak hour and Saturday mid-day peak hour are provided in ***Figures 10-19***, ***10-20*** and ***10-21***, respectively.

10.5 Summary of Impacted Intersections by Analysis Scenarios

A summary of impacted intersections by analysis scenario (i.e., Existing With Project Build-out, Future Year 2016 With Phase I Project, Future Year 2019 With Project Build-out, and Future Year 2035 With Project Build-out conditions) is presented in ***Table 10-5***. As indicated in *Table 10-5*, the proposed project is expected to create a significant impact at 10 of the 31 City of El Monte study intersections during the weekday AM peak hour, weekday PM peak hour and/or the Saturday mid-day peak hour in the year 2035 Future With Project Build-out conditions. All 7 study intersections forecast to be significantly impacted by the proposed project under the Existing With Project scenario are also forecast to be significantly impacted in the future 2019 and 2035 With Project Build-out conditions based on City of El Monte threshold criteria. Thus, the Existing With Project analysis did not result in the identification of any impacts that were not previously disclosed in Subsections 10.3 and 10.4 herein.

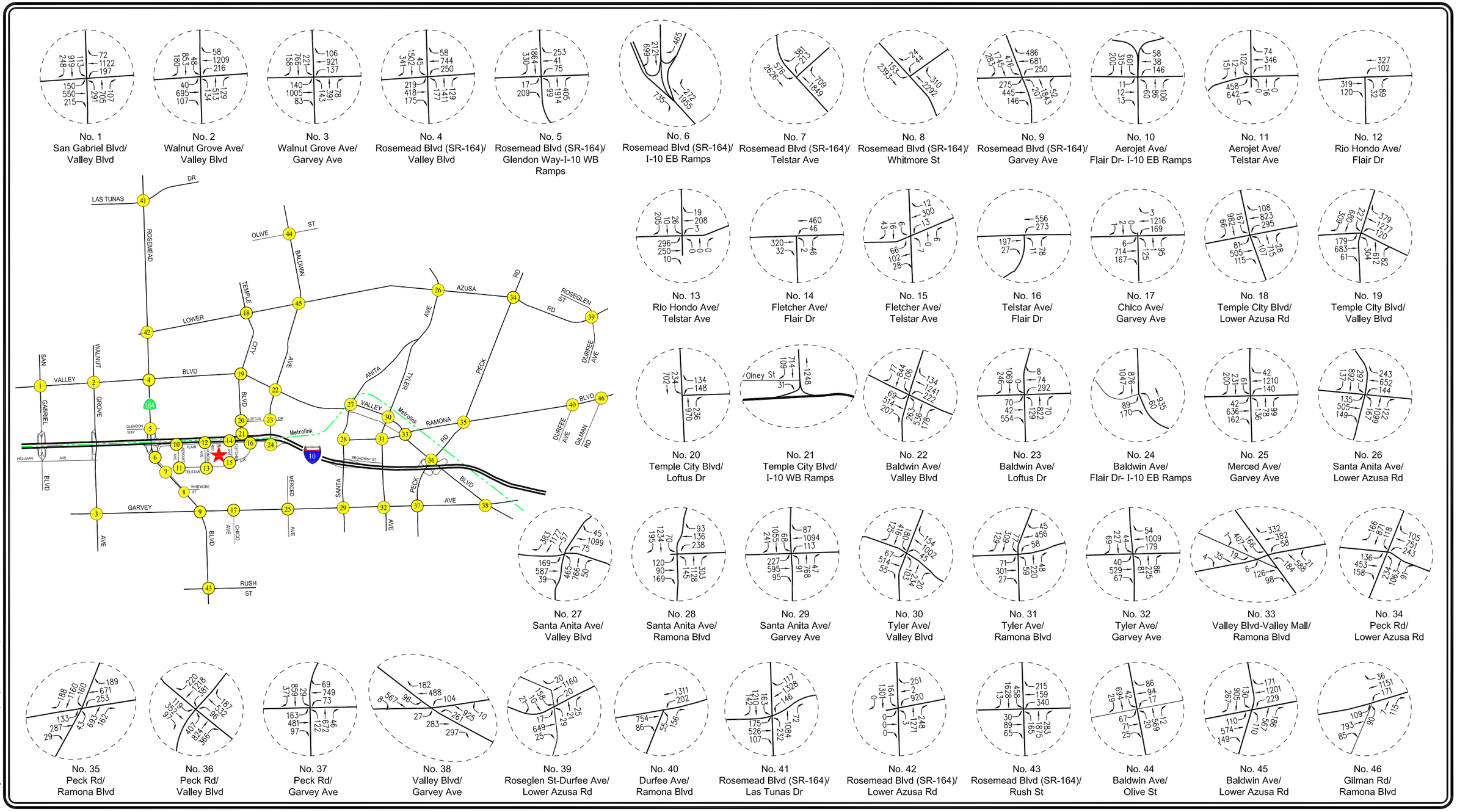

NOT TO SCALE

LINSCOTT, LAW & GREENSPAN, engineers

FIGURE 10-19

FUTURE YEAR 2035 WITH PROJECT BUILD-OUT TRAFFIC VOLUMES

WEEKDAY AM PEAK HOUR

FLAIR SPECTRUM SPECIFIC PLAN

o:\job_file\4074\dwg\f10-19.dwg LDP 10:27:06 09/24/2014 rodriguez

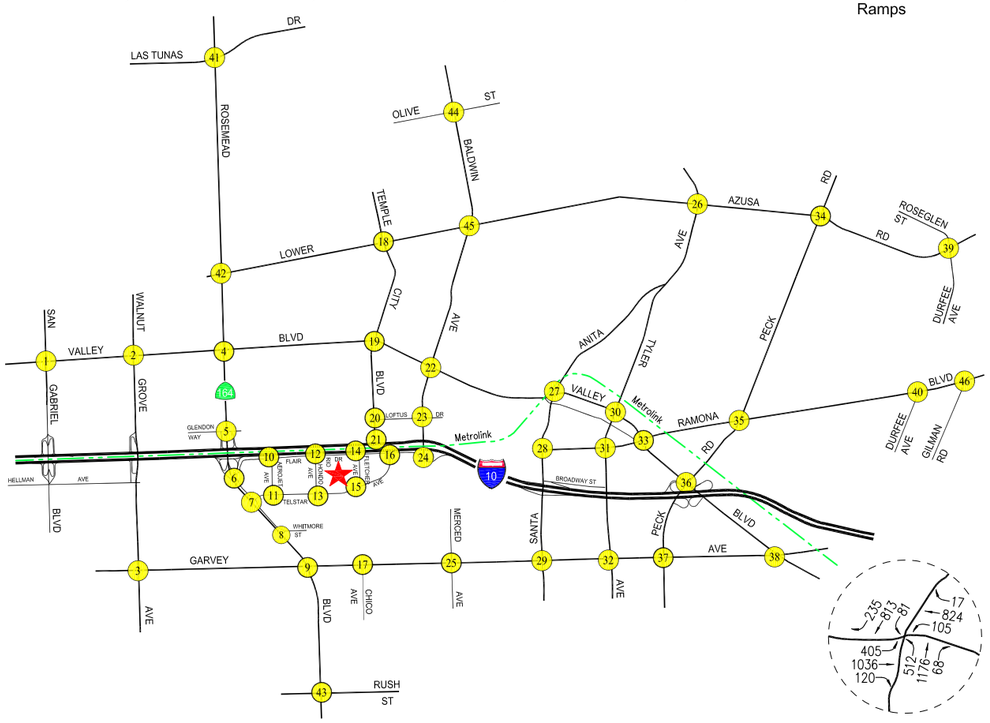

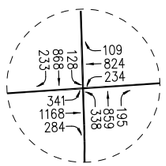

No. 1
San Gabriel Blvd/
Valley Blvd

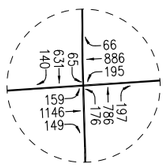

No. 2
Walnut Grove Ave/
Valley Blvd

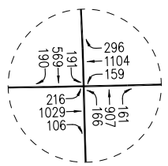

No. 3
Walnut Grove Ave/
Garvey Ave

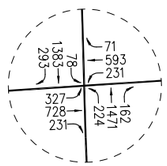

No. 4
Rosemead Blvd (SR-164)/
Valley Blvd

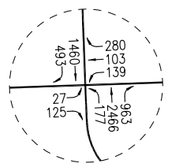

No. 5
Rosemead Blvd (SR-164)/
Glendon Way-I-10 WB
Ramps

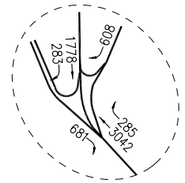

No. 6
Rosemead Blvd (SR-164)/
I-10 EB Ramps

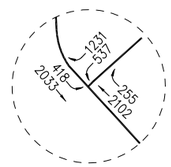

No. 7
Rosemead Blvd (SR-164)/
Telstar Ave

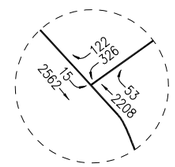

No. 8
Rosemead Blvd (SR-164)/
Whitmore St

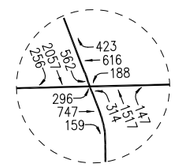

No. 9
Rosemead Blvd (SR-164)/
Garvey Ave

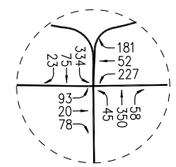

No. 10
Aerojet Ave/
Flair Dr- I-10 EB Ramps

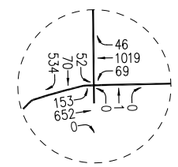

No. 11
Aerojet Ave/
Telstar Ave

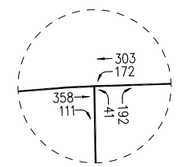

No. 12
Rio Hondo Ave/
Flair Dr

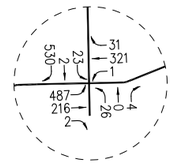

No. 13
Rio Hondo Ave/
Telstar Ave

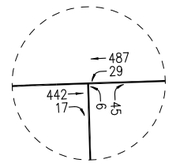

No. 14
Fletcher Ave/
Flair Dr

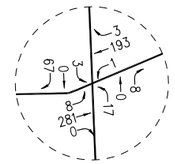

No. 15
Fletcher Ave/
Telstar Ave

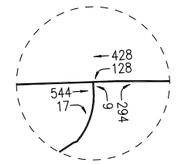

No. 16
Telstar Ave/
Flair Dr

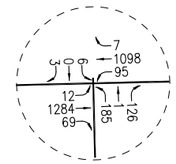

No. 17
Chico Ave/
Garvey Ave

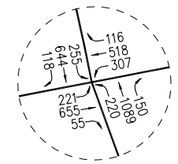

No. 18
Temple City Blvd/
Lower Azusa Rd

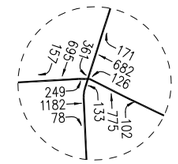

No. 19
Temple City Blvd/
Valley Blvd

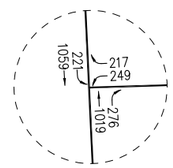

No. 20
Temple City Blvd/
Loftus Dr

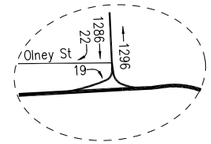

No. 21
Temple City Blvd/
I-10 WB Ramps

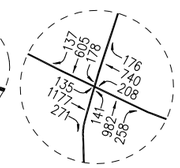

No. 22
Baldwin Ave/
Valley Blvd

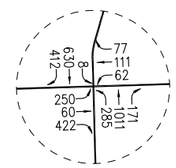

No. 23
Baldwin Ave/
Loftus Dr

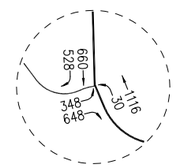

No. 24
Baldwin Ave/
Flair Dr- I-10 EB Ramps

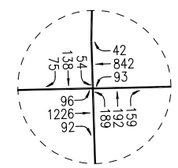

No. 25
Merced Ave/
Garvey Ave

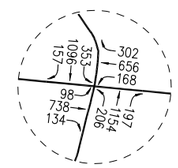

No. 26
Santa Anita Ave/
Lower Azusa Rd

No. 27
Santa Anita Ave/
Valley Blvd

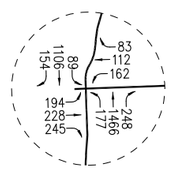

No. 28
Santa Anita Ave/
Ramona Blvd

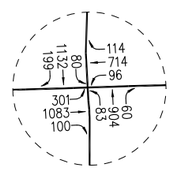

No. 29
Santa Anita Ave/
Garvey Ave

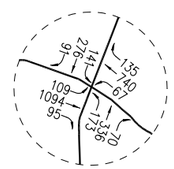

No. 30
Tyler Ave/
Valley Blvd

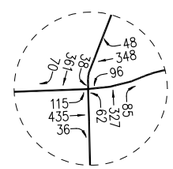

No. 31
Tyler Ave/
Ramona Blvd

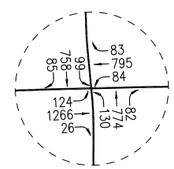

No. 32
Tyler Ave/
Garvey Ave

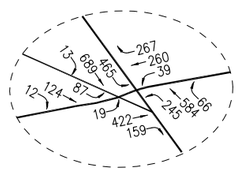

No. 33
Valley Blvd-Valley Mall/
Ramona Blvd

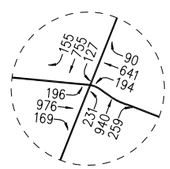

No. 34
Peck Rd/
Lower Azusa Rd

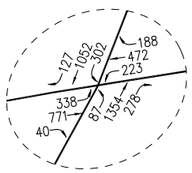

No. 35
Peck Rd/
Ramona Blvd

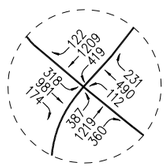

No. 36
Peck Rd/
Valley Blvd

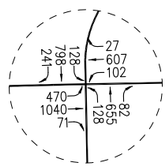

No. 37
Peck Rd/
Garvey Ave

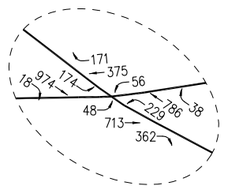

No. 38
Valley Blvd/
Garvey Ave

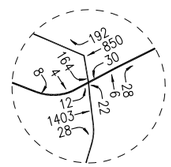

No. 39
Roseglen St-Durfee Ave/
Lower Azusa Rd

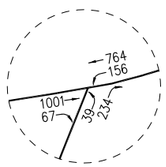

No. 40
Durfee Ave/
Ramona Blvd

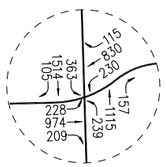

No. 41
Rosemead Blvd (SR-164)/
Las Tunas Dr

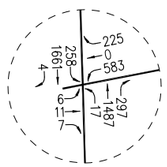

No. 42
Rosemead Blvd (SR-164)/
Lower Azusa Rd

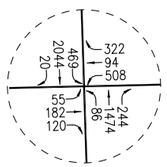

No. 43
Rosemead Blvd (SR-164)/
Rush St

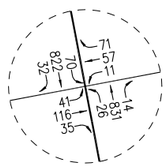

No. 44
Baldwin Ave/
Olive St

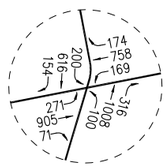

No. 45
Baldwin Ave/
Lower Azusa Rd

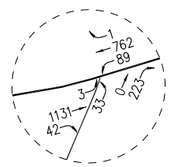

No. 46
Gilman Rd/
Ramona Blvd

NOT TO SCALE

LINSCOTT, LAW & GREENSPAN, engineers

FIGURE 10-20

FUTURE YEAR 2035 WITH PROJECT BUILD-OUT TRAFFIC VOLUMES

WEEKDAY PM PEAK HOUR

FLAIR SPECTRUM SPECIFIC PLAN

o:\job_file\4074\dwg\f10-20.dwg LDP 10:29:07 09/24/2014 rodriguez

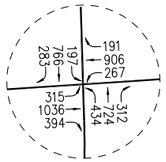

No. 1
San Gabriel Blvd/
Valley Blvd

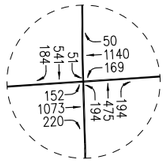

No. 2
Walnut Grove Ave/
Valley Blvd

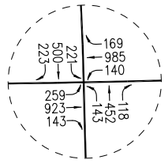

No. 3
Walnut Grove Ave/
Garvey Ave

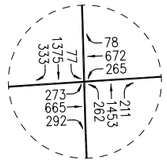

No. 4
Rosemead Blvd (SR-164)/
Valley Blvd

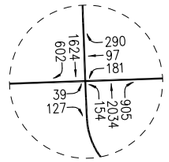

No. 5
Rosemead Blvd (SR-164)/
Glendon Way-I-10 WB
Ramps

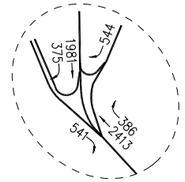

No. 6
Rosemead Blvd (SR-164)/
I-10 EB Ramps

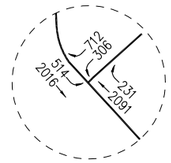

No. 7
Rosemead Blvd (SR-164)/
Telstar Ave

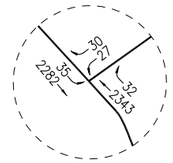

No. 8
Rosemead Blvd (SR-164)/
Whitmore St

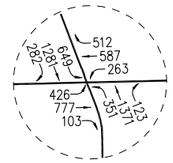

No. 9
Rosemead Blvd (SR-164)/
Garvey Ave

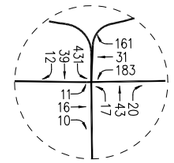

No. 10
Aerojet Ave/
Flair Dr- I-10 EB Ramps

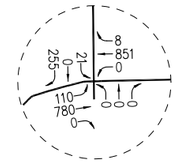

No. 11
Aerojet Ave/
Telstar Ave

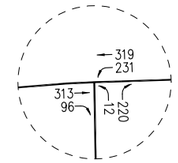

No. 12
Rio Hondo Ave/
Flair Dr

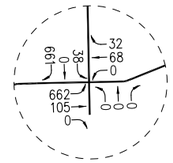

No. 13
Rio Hondo Ave/
Telstar Ave

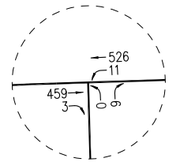

No. 14
Fletcher Ave/
Flair Dr

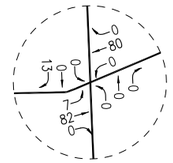

No. 15
Fletcher Ave/
Telstar Ave

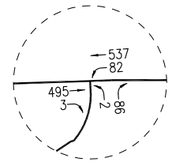

No. 16
Telstar Ave/
Flair Dr

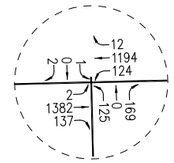

No. 17
Chico Ave/
Garvey Ave

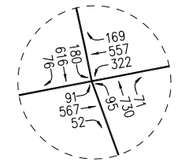

No. 18
Temple City Blvd/
Lower Azusa Rd

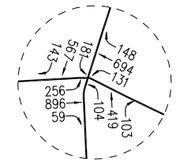

No. 19
Temple City Blvd/
Valley Blvd

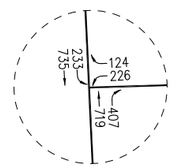

No. 20
Temple City Blvd/
Loftus Dr

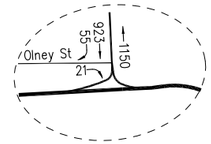

No. 21
Temple City Blvd/
I-10 WB Ramps

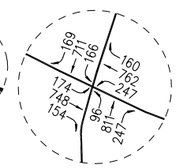

No. 22
Baldwin Ave/
Valley Blvd

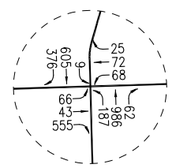

No. 23
Baldwin Ave/
Loftus Dr

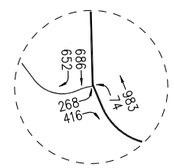

No. 24
Baldwin Ave/
Flair Dr- I-10 EB Ramps

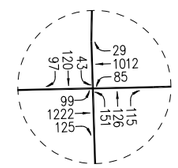

No. 25
Merced Ave/
Garvey Ave

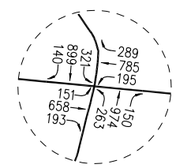

No. 26
Santa Anita Ave/
Lower Azusa Rd

No. 27
Santa Anita Ave/
Valley Blvd

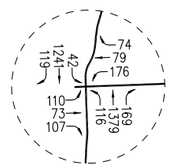

No. 28
Santa Anita Ave/
Ramona Blvd

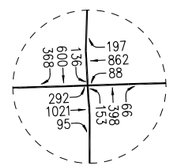

No. 29
Santa Anita Ave/
Garvey Ave

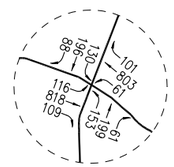

No. 30
Tyler Ave/
Valley Blvd

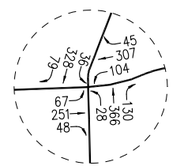

No. 31
Tyler Ave/
Ramona Blvd

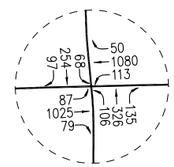

No. 32
Tyler Ave/
Garvey Ave

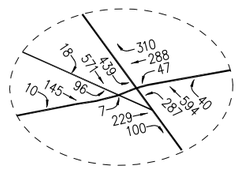

No. 33
Valley Blvd-Valley Mall/
Ramona Blvd

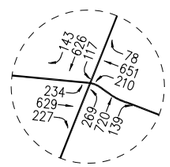

No. 34
Peck Rd/
Lower Azusa Rd

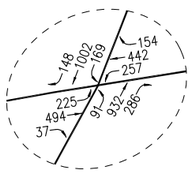

No. 35
Peck Rd/
Ramona Blvd

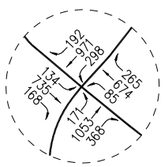

No. 36
Peck Rd/
Valley Blvd

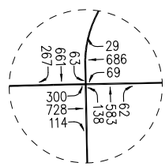

No. 37
Peck Rd/
Garvey Ave

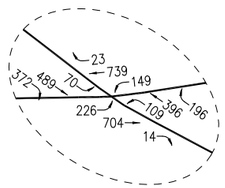

No. 38
Valley Blvd/
Garvey Ave

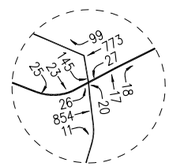

No. 39
Roseglen St-Durfee Ave/
Lower Azusa Rd

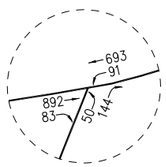

No. 40
Durfee Ave/
Ramona Blvd

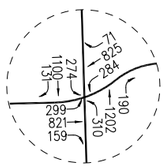

No. 41
Rosemead Blvd (SR-164)/
Las Tunas Dr

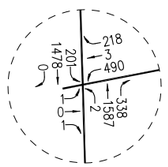

No. 42
Rosemead Blvd (SR-164)/
Lower Azusa Rd

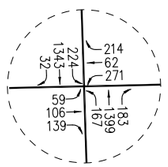

No. 43
Rosemead Blvd (SR-164)/
Rush St

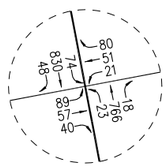

No. 44
Baldwin Ave/
Olive St

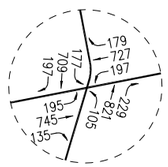

No. 45
Baldwin Ave/
Lower Azusa Rd

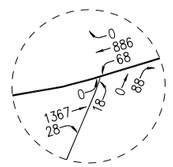

No. 46
Gilman Rd/
Ramona Blvd

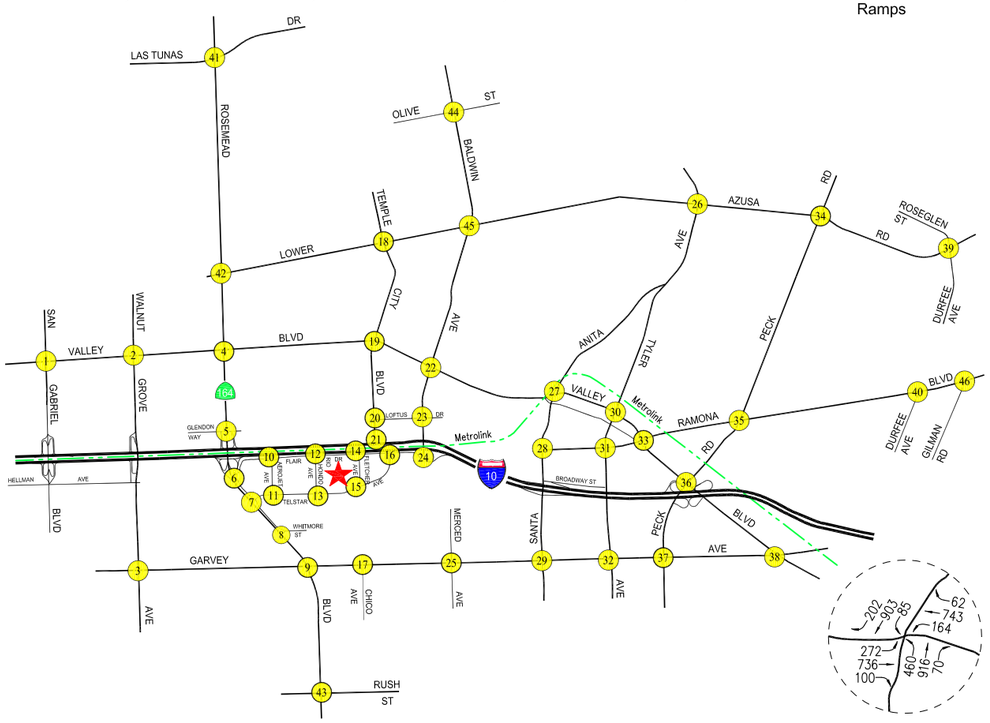

o:\job_file\4074\dwg\f10-21.dwg LDP 10:31:17 09/24/2014 rodriquez

NOT TO SCALE

LINSCOTT, LAW & GREENSPAN, engineers

FIGURE 10-21

FUTURE YEAR 2035 WITH PROJECT BUILD-OUT TRAFFIC VOLUMES

SATURDAY MID-DAY PEAK HOUR

FLAIR SPECTRUM SPECIFIC PLAN

Table 10-5
CITY OF EL MONTE
SUMMARY OF IMPACTED INTERSECTIONS BY ANALYSIS SCENARIO [1]

NO.	INTERSECTION	PEAK HOUR	YEAR 2014 EXISTING WITH PROJECT CONDITIONS	YEAR 2016 WITH PHASE I PROJECT CONDITIONS	YEAR 2019 WITH PROJECT BUILD-OUT CONDITIONS	YEAR 2035 WITH PROJECT BUILD-OUT CONDITIONS
7	Rosemead Boulevard (SR-164)/ Telstar Avenue	PM	YES	----	YES	YES
10	Aerojet Avenue/ Flair Drive-I-10 EB Ramps	AM PM	YES YES	YES YES	---- YES	---- YES
11	Aerojet Avenue/ Telstar Avenue	AM PM SAT	---- YES YES	YES YES YES	YES YES YES	YES YES YES
13	Rio Hondo Avenue/ Telstar Avenue	PM SAT	YES YES	YES YES	YES YES	YES YES
16	Telstar Avenue/ Flair Drive	PM	----	----	YES	YES
22	Baldwin Avenue/ Valley Boulevard	PM	----	----	----	YES
23	Baldwin Avenue/ Loftus Drive	AM PM SAT	YES ---- ----	YES ---- ----	YES YES ----	YES YES YES
24	Baldwin Avenue/ Flair Drive-I-10 EB Ramps	AM PM SAT	YES YES YES	YES YES YES	YES YES YES	YES YES YES
27	Santa Anita Avenue/ Valley Boulevard	PM	----	----	----	YES
40	Durfee Avenue/ Ramona Boulevard	AM PM	YES ----	YES ----	YES YES	YES YES

[1] Based on City of El Monte analysis methodology and threshold criteria.

11.0 OTHER JURISDICTIONS' TRAFFIC ANALYSES

This section of the report summarizes the traffic impact analyses prepared for jurisdictions other than the Lead Agency (i.e., City of El Monte), including the Cities of San Gabriel, Rosemead, South El Monte, Arcadia and Temple City. Traffic impact analyses prepared for the study intersections using the ICU and HCM methodologies with application of the Cities of San Gabriel, Rosemead, South El Monte, and Arcadia significant traffic impact criteria are summarized as follows:

- ***Table 11–1***: Year 2014 Existing Conditions traffic analysis
- ***Table 11-2***: Future Year 2016 Conditions traffic analysis
- ***Table 11-3***: Future Year 2019 Conditions traffic analysis
- ***Table 11-4***: Future Year 2035 Conditions traffic analysis

The traffic impact analyses prepared for the study intersections using the ICU and HCM methodologies with application of the City of Temple City significant traffic impact criteria is summarized as follows:

- ***Table 11-5***: Future Year 2016 Conditions traffic analysis
- ***Table 11-6***: Future Year 2019 Conditions traffic analysis
- ***Table 11-7***: Future Year 2035 Conditions traffic analysis

The ICU and HCM data worksheets for the analyzed intersections are contained in *Appendix B*.

11.1 City of San Gabriel Traffic Analysis

11.1.1 Existing With Project Build-out Conditions

As shown in column [2] of *Table 11-1*, application of the City of Gabriel's threshold criteria to the "Existing With Project" scenario indicates that the proposed project (i.e., build-out of Phases I and II) is not expected to create a significant impact at the City of San Gabriel study intersection during the weekday AM peak hour, weekday PM peak hour and/or the Saturday mid-day peak hour. Incremental but not significant impacts are noted at the City of San Gabriel study intersection. The existing with project build-out (existing plus project build-out) traffic volumes at the study intersections during the weekday AM peak hour, weekday PM peak hour and Saturday mid-day peak hour are provided in *Figures 10-1*, *10-2* and *10-3*, respectively.

11.1.2 Future Year 2016 With Phase I Project Conditions

As shown in column [2] of *Table 11-2*, application of the City of San Gabriel's threshold criteria to the "Future Year 2016 With Phase I Project" scenario indicates that the Phase I project is not expected to create a s ignificant impact at the City of San Gabriel study intersection during the

Table 11-1
OTHER JURISDICTIONS LEVELS OF SERVICE SUMMARY
YEAR 2014 EXISTING CONDITIONS
WEEKDAY AM, PM AND SATURDAY MID-DAY PEAK HOURS

				[1]		[2]			
NO.	INTERSECTION	TRAFFIC CONTROL	PEAK HOUR	YEAR 2014 EXISTING DELAY or V/C	LOS [a]	YEAR 2014 EXISTING WITH PROJECT BUILDOUT DELAY or V/C	LOS [a]	CHANGE V/C [(2)-(1)]	SIGNIF. IMPACT [e]
City of San Gabriel									
1	San Gabriel Boulevard/ Valley Boulevard	Signalized	AM	0.718	C	0.720	C	0.002	NO
			PM	0.879	D	0.883	D	0.004	NO
			SAT	0.877	D	0.888	D	0.011	NO
City of Rosemead									
2	Walnut Grove Avenue/ Valley Boulevard	Signalized	AM	0.776	C	0.780	C	0.004	NO
			PM	0.841	D	0.848	D	0.007	NO
			SAT	0.788	C	0.799	C	0.011	NO
3	Walnut Grove Avenue/ Garvey Avenue	Signalized	AM	0.772	C	0.774	C	0.002	NO
			PM	0.938	E	0.943	E	0.005	NO
			SAT	0.764	C	0.771	C	0.007	NO
4	Rosemead Boulevard (SR-164)/ Valley Boulevard	Signalized	AM	0.893	D	0.905	E	0.012	NO
			PM	0.888	D	0.914	E	0.026	NO
			SAT	0.889	D	0.942	E	0.053	NO
5	Rosemead Boulevard (SR-164)/ Glendon Way-I-10 WB Ramps	Signalized	AM	0.802	D	0.814	D	0.012	NO
			PM	0.840	D	0.903	E	0.063	NO
			SAT	0.778	C	0.837	D	0.059	NO
6	Rosemead Boulevard (SR-164)/ I-10 EB Ramps	Yield Only	AM	[b]		[b]		[b]	
			PM	[b]		[b]		[b]	
			SAT	[b]		[b]		[b]	
7	Rosemead Boulevard (SR-164)/ Telstar Avenue	Signalized	AM	0.787	C	0.913	E	0.126	NO
			PM	0.814	D	1.055	F	0.241	YES
			SAT	0.656	B	0.963	E	0.307	NO
8	Rosemead Boulevard (SR-164)/ Whitmore Street	Signalized	AM	0.594	A	0.602	B	0.008	NO
			PM	0.752	C	0.767	C	0.015	NO
			SAT	0.544	A	0.572	A	0.028	NO
19	Temple City Boulevard/ Valley Boulevard	Signalized	AM	0.960	E	0.962	E	0.002	NO
			PM	0.786	C	0.788	C	0.002	NO
			SAT	0.652	B	0.656	B	0.004	NO
20	Temple City Boulevard/ Loftus Drive	Signalized	AM	0.734	C	0.738	C	0.004	NO
			PM	0.834	D	0.844	D	0.010	NO
			SAT	0.661	B	0.675	B	0.014	NO
21	Temple City Boulevard/I-10 WB Ramps/ Olney Street [d]	Two-Way Stop	AM	12.7	B	12.7	B	0.050	NO
			PM	18.1	C	18.1	C	0.098	NO
			SAT	15.5	C	15.5	C	0.152	NO
			AM	0.691		0.741			
			PM	0.726		0.824			
			SAT	0.601		0.753			
42	Rosemead Boulevard (SR-164)/ Lower Azusa Road	Signalized	AM	0.859	D	0.864	D	0.005	NO
			PM	0.842	D	0.850	D	0.008	NO
			SAT	0.781	C	0.795	C	0.014	NO
City of South El Monte									
9	Rosemead Boulevard (SR-164)/ Garvey Avenue	Signalized	AM	0.887	D	0.902	E	0.015	YES
			PM	0.921	E	0.930	E	0.009	YES
			SAT	0.918	E	0.948	E	0.030	YES
17	Chico Avenue/ Garvey Avenue	Signalized	AM	0.551	A	0.558	A	0.007	NO
			PM	0.676	B	0.687	B	0.011	NO
			SAT	0.727	C	0.744	C	0.017	NO
43	Rosemead Boulevard (SR-164)/ Rush Street	Signalized	AM	0.816	D	0.818	D	0.002	NO
			PM	0.821	D	0.825	D	0.004	NO
			SAT	0.641	B	0.647	B	0.006	NO
City of Arcadia									
39	Roseglen Street-Durfee Avenue/ Lower Azusa Road	Signalized	AM	0.578	A	0.579	A	0.001	NO
			PM	0.634	B	0.636	B	0.002	NO
			SAT	0.488	A	0.492	A	0.004	NO

[a] Level of Service (LOS) is based on the reported ICU value for signalized intersections and on the delay for unsignalized intersections. When LOS F is reached for an unsignalized intersection, the intersection becomes unstable and the calculated delay values become unreliable/unrealistic. Small increases in traffic volumes may result in very large increases in the calculated delay values which is not representative of actual conditions. Therefore, where calculated delay values are over 50.0 seconds (i.e., LOS F conditions by HCM definition), over-saturated conditions are expected and delay values of "> 50.0" seconds are reported in this table.

[b] City of San Gabriel intersection impact threshold criteria is as follows:

Final v/c	LOS	Project Related Increase in v/c
>=0.600 - 0.700	A,B	equal to or greater than 0.06
>=0.700 - 0.800	C	equal to or greater than 0.04
>=0.800 - 0.900	D	equal to or greater than 0.02
> 0.900	E,F	equal to or greater than 0.01

[c] City of Rosemead intersection impact threshold criteria is as follows:
- Change in v/c >= 0.02 and causing LOS F (v/c >= 1.00)
- Increase existing LOS F (v/c = 1.00) by v/c >= 0.02

[d] As none of the subject approaches are required to stop, no intersection delay values are computed pursuant to the HCM methodologies.

[e] Two-Way Stop-Controlled Intersection. Reported values represent the delays associated with the most constrained approach of the intersection.

[f] City of South El Monte intersection impact threshold criteria is as follows:
- Existing LOS A, B, C or D is degraded to LOS E or F.

[g] City of Arcadia intersection impact threshold criteria is as follows:
- Existing LOS A, B, C or D is degraded to LOS E or F.
- Increase existing LOS E or F by v/c >= 0.02

Table 11-2
OTHER JURISDICTIONS LEVELS OF SERVICE SUMMARY
YEAR 2016 FUTURE CONDITIONS
WEEKDAY AM, PM AND SATURDAY MID-DAY PEAK HOURS

NO.	INTERSECTION	TRAFFIC CONTROL	PEAK HOUR	[1] YEAR 2016 FUTURE PRE-PROJECT W/ AG & REL. PROJECTS DELAY or V/C	LOS [a]	[2] YEAR 2016 FUTURE WITH PHASE I PROJECT DELAY or V/C	LOS [a]	CHANGE V/C [(2)-(1)]	SIGNIF. IMPACT [e]	[3] YEAR 2016 FUTURE WITH PROJECT MITIGATION DELAY or V/C	LOS [a]	CHANGE V/C [(3)-(1)]	MITIGATED [e]
	City of San Gabriel [b]												
1	San Gabriel Boulevard/	Signalized	AM	0.926	E	0.927	E	0.001	NO	0.927	E	0.001	---
	Valley Boulevard		PM	1.085	F	1.087	F	0.002	NO	1.087	F	0.002	---
			SAT	1.109	F	1.113	F	0.004	NO	1.113	F	0.004	---
	City of Rosemead [c[												
2	Walnut Grove Avenue/	Signalized	AM	0.857	D	0.858	D	0.001	NO	0.858	D	0.001	---
	Valley Boulevard		PM	0.900	D	0.905	E	0.005	NO	0.905	E	0.005	---
			SAT	0.879	D	0.889	D	0.010	NO	0.889	D	0.010	---
3	Walnut Grove Avenue/	Signalized	AM	0.835	D	0.837	D	0.002	NO	0.837	D	0.002	---
	Garvey Avenue		PM	1.038	F	1.042	F	0.004	NO	1.042	F	0.004	---
			SAT	0.869	D	0.875	D	0.006	NO	0.875	D	0.006	---
4	Rosemead Boulevard (SR-164)/	Signalized	AM	0.959	E	0.966	E	0.007	NO	0.966	E	0.007	---
	Valley Boulevard		PM	0.959	E	0.979	E	0.020	NO	0.979	E	0.020	---
			SAT	0.956	E	0.992	E	0.036	NO	0.992	E	0.036	---
5	Rosemead Boulevard (SR-164)/	Signalized	AM	0.840	D	0.851	D	0.011	NO	0.851	D	0.011	---
	Glendon Way-I-10 WB Ramps		PM	0.871	D	0.926	E	0.055	NO	0.926	E	0.055	---
			SAT	0.801	D	0.846	D	0.045	NO	0.846	D	0.045	---
6	Rosemead Boulevard (SR-164)/	Yield Only	AM	[d]		[d]		[d]		[d]		[d]	
	I-10 EB Ramps		PM	[d]		[d]		[d]		[d]		[d]	
			SAT	[d]		[d]		[d]		[d]		[d]	
7	Rosemead Boulevard (SR-164)/	Signalized	AM	0.678	B	0.731	C	0.053	NO	0.731	C	0.053	---
	Telstar Avenue		PM	0.825	D	0.957	E	0.132	NO	0.957	E	0.132	---
			SAT	0.621	B	0.852	D	0.231	NO	0.852	D	0.231	---
8	Rosemead Boulevard (SR-164)/	Signalized	AM	0.658	B	0.665	B	0.007	NO	0.665	B	0.007	---
	Whitmore Street		PM	0.834	D	0.847	D	0.013	NO	0.847	D	0.013	---
			SAT	0.574	A	0.598	A	0.024	NO	0.598	A	0.024	---
19	Temple City Boulevard/	Signalized	AM	1.024	F	1.025	F	0.001	NO	1.025	F	0.001	---
	Valley Boulevard		PM	0.977	E	0.979	E	0.002	NO	0.979	E	0.002	---
			SAT	0.705	C	0.708	C	0.003	NO	0.708	C	0.003	---
20	Temple City Boulevard/	Signalized	AM	0.838	D	0.841	D	0.003	NO	0.841	D	0.003	---
	Loftus Drive		PM	0.880	D	0.887	D	0.007	NO	0.887	D	0.007	---
			SAT	0.703	C	0.716	C	0.013	NO	0.716	C	0.013	---
21	Temple City Boulevard/I-10 WB Ramps/	Two-Way	AM	13.4	B	13.4	B	0.046	NO	13.4	B	0.046	---
	Olney Street [e]	Stop	PM	24.3	C	24.3	C	0.000	NO	24.3	C	0.000	---
			SAT	16.9	C	16.9	C	0.124	NO	16.9	C	0.124	---
			AM	0.790		0.836				0.836			
			PM	0.856		0.856				0.856			
			SAT	0.642		0.766				0.766			
42	Rosemead Boulevard (SR-164)/	Signalized	AM	0.924	E	0.926	E	0.002	NO	0.926	E	0.002	---
	Lower Azusa Road		PM	0.915	E	0.922	E	0.007	NO	0.922	E	0.007	---
			SAT	0.857	D	0.869	D	0.012	NO	0.869	D	0.012	---
	City of South El Monte [f]												
9	Rosemead Boulevard (SR-164)/	Signalized	AM	0.952	E	0.962	E	0.010	YES	0.912	E	-0.040	YES
	Garvey Avenue		PM	1.002	F	1.009	F	0.007	YES	0.959	E	-0.043	YES
			SAT	0.966	E	1.000	E	0.034	YES	0.950	E	-0.016	YES
17	Chico Avenue/	Signalized	AM	0.573	A	0.578	A	0.005	NO	0.578	A	0.005	---
	Garvey Avenue		PM	0.713	C	0.722	C	0.009	NO	0.722	C	0.009	---
			SAT	0.758	C	0.773	C	0.015	NO	0.773	C	0.015	---
43	Rosemead Boulevard (SR-164)/	Signalized	AM	0.841	D	0.842	D	0.001	NO	0.842	D	0.001	---
	Rush Street		PM	0.841	D	0.844	D	0.003	NO	0.844	D	0.003	---
			SAT	0.659	B	0.663	B	0.004	NO	0.663	B	0.004	---
	City of Arcadia [g]												
39	Roseglen Street-Durfee Avenue/	Signalized	AM	0.596	A	0.597	A	0.001	NO	0.597	A	0.001	---
	Lower Azusa Road		PM	0.656	B	0.658	B	0.002	NO	0.658	B	0.002	---
			SAT	0.501	A	0.504	A	0.003	NO	0.504	A	0.003	---

[a] Level of Service (LOS) is based on the reported ICU value for signalized intersections and on the delay for unsignalized intersections. When LOS F is reached for an unsignalized intersection, the intersection becomes unstable and the calculated delay values become unreliable/unrealistic. Small increases in traffic volumes may result in very large increases in the calculated delay values which is not representative of actual conditions. Therefore, where calculated delay values are over 50.0 seconds (i.e., LOS F conditions by HCM definition), over-saturated conditions are expected and delay values of "> 50.0" seconds are reported in this table.

[b] City of San Gabriel intersection impact threshold criteria is as follows:

Final v/c	LOS	Project Related Increase in v/c
>=0.600 - 0.700	A,B	equal to or greater than 0.06
>=0.700 - 0.800	C	equal to or greater than 0.04
>=0.800 - 0.900	D	equal to or greater than 0.02
> 0.900	E,F	equal to or greater than 0.01

[c] City of Rosemead intersection impact threshold criteria is as follows:
- Change in v/c >= 0.02 and causing LOS F (v/c >= 1.00)
- Increase existing LOS F (v/c = 1.00) by v/c >= 0.02

[d] As none of the subject approaches are required to stop, no intersection delay values are computed pursuant to the HCM methodologies.

[e] Two-Way Stop-Controlled Intersection. Reported values represent the delays associated with the most constrained approach of the intersection.

[f] City of South El Monte intersection impact threshold criteria is as follows:
- Existing LOS A, B, C or D is degraded to LOS E or F.

[g] City of Arcadia intersection impact threshold criteria is as follows:
- Existing LOS A, B, C or D is degraded to LOS E or F.
- Increase existing LOS E or F by v/c >= 0.02

Table 11-3
OTHER JURISDICTIONS LEVELS OF SERVICE SUMMARY
YEAR 2019 FUTURE CONDITIONS
WEEKDAY AM, PM AND SATURDAY MID-DAY PEAK HOURS

				[1]		[2]				[3]			
NO.	INTERSECTION	TRAFFIC CONTROL	PEAK HOUR	YEAR 2019 FUTURE PRE-PROJECT W/ AG & REL. PROJECTS DELAY or V/C	LOS [a]	YEAR 2019 FUTURE WITH PROJECT BUILDOUT DELAY or V/C	LOS [a]	CHANGE V/C [(2)-(1)]	SIGNIF. IMPACT [e]	YEAR 2019 FUTURE WITH PROJECT BUILDOUT MITIGATION DELAY or V/C	LOS [a]	CHANGE V/C [(3)-(1)]	MITIGATED [e]
City of San Gabriel [b]													
1	San Gabriel Boulevard/ Valley Boulevard	Signalized	AM	0.942	E	0.944	E	0.002	NO	0.944	E	0.002	---
			PM	1.105	F	1.109	F	0.004	NO	1.109	F	0.004	---
			SAT	1.129	F	1.134	F	0.005	NO	1.134	F	0.005	---
City of Rosemead [c]													
2	Walnut Grove Avenue/ Valley Boulevard	Signalized	AM	0.874	D	0.878	D	0.004	NO	0.878	D	0.004	---
			PM	0.918	E	0.925	E	0.007	NO	0.925	E	0.007	---
			SAT	0.896	D	0.907	E	0.011	NO	0.907	E	0.011	---
3	Walnut Grove Avenue/ Garvey Avenue	Signalized	AM	0.852	D	0.855	D	0.003	NO	0.855	D	0.003	---
			PM	1.060	F	1.064	F	0.004	NO	1.064	F	0.004	---
			SAT	0.885	D	0.892	D	0.007	NO	0.892	D	0.007	---
4	Rosemead Boulevard (SR-164)/ Valley Boulevard	Signalized	AM	0.979	E	0.991	E	0.012	NO	0.941	E	-0.038	---
			PM	0.978	E	1.004	F	0.026	YES	0.954	E	-0.024	YES
			SAT	0.976	E	1.016	F	0.040	YES	0.966	E	-0.010	YES
5	Rosemead Boulevard (SR-164)/ Glendon Way-I-10 WB Ramps	Signalized	AM	0.858	D	0.870	D	0.012	NO	0.870	D	0.012	---
			PM	0.889	D	0.952	E	0.063	NO	0.952	E	0.063	---
			SAT	0.818	D	0.871	D	0.053	NO	0.871	D	0.053	---
6	Rosemead Boulevard (SR-164)/ I-10 EB Ramps	Yield Only	AM	[d]		[d]		[d]		[d]		[d]	
			PM	[d]		[d]		[d]		[d]		[d]	
			SAT	[d]		[d]		[d]		[d]		[d]	
7	Rosemead Boulevard (SR-164)/ Telstar Avenue	Signalized	AM	0.691	B	0.770	C	0.079	NO	0.720	C	0.029	---
			PM	0.842	D	1.002	F	0.160	YES	0.952	E	0.110	YES
			SAT	0.634	B	0.890	D	0.256	NO	0.840	D	0.206	---
8	Rosemead Boulevard (SR-164)/ Whitmore Street	Signalized	AM	0.670	B	0.679	B	0.009	NO	0.679	B	0.009	---
			PM	0.851	D	0.866	D	0.015	NO	0.866	D	0.015	---
			SAT	0.586	A	0.613	B	0.027	NO	0.613	B	0.027	---
19	Temple City Boulevard/ Valley Boulevard	Signalized	AM	1.045	F	1.047	F	0.002	NO	1.047	F	0.002	---
			PM	0.994	E	0.997	E	0.003	NO	0.997	E	0.003	---
			SAT	0.719	C	0.723	C	0.004	NO	0.723	C	0.004	---
20	Temple City Boulevard/ Loftus Drive	Signalized	AM	0.854	D	0.858	D	0.004	NO	0.858	D	0.004	---
			PM	0.898	D	0.908	E	0.010	NO	0.908	E	0.010	---
			SAT	0.717	C	0.732	C	0.015	NO	0.732	C	0.015	---
21	Temple City Boulevard/I-10 WB Ramps/ Olney Street [e]	Two-Way Stop	AM	13.6	B	13.6	B	0.051	NO	13.6	B	0.051	---
			PM	25.0	C	25.0	C	0.005	NO	25.0	C	0.005	---
			SAT	17.3	C	17.3	C	0.141	NO	17.3	C	0.141	---
			AM	0.805		0.856				0.856			
			PM	0.871		0.876				0.876			
			SAT	0.654		0.795				0.795			
42	Rosemead Boulevard (SR-164)/ Lower Azusa Road	Signalized	AM	0.943	E	0.948	E	0.005	NO	0.948	E	0.005	---
			PM	0.933	E	0.942	E	0.009	NO	0.942	E	0.009	---
			SAT	0.874	D	0.888	D	0.014	NO	0.888	D	0.014	---
City of South El Monte [f]													
9	Rosemead Boulevard (SR-164)/ Garvey Avenue	Signalized	AM	0.972	E	0.987	E	0.015	YES	0.937	E	-0.035	YES
			PM	1.023	F	1.031	F	0.008	YES	0.981	E	-0.042	YES
			SAT	0.986	E	1.027	F	0.041	YES	0.977	E	-0.009	YES
17	Chico Avenue/ Garvey Avenue	Signalized	AM	0.584	A	0.590	A	0.006	NO	0.590	A	0.006	---
			PM	0.728	C	0.738	C	0.010	NO	0.738	C	0.010	---
			SAT	0.773	C	0.791	C	0.018	NO	0.791	C	0.018	---
43	Rosemead Boulevard (SR-164)/ Rush Street	Signalized	AM	0.859	D	0.860	D	0.001	NO	0.860	D	0.001	---
			PM	0.859	D	0.864	D	0.005	NO	0.864	D	0.005	---
			SAT	0.672	B	0.678	B	0.006	NO	0.678	B	0.006	---
City of Arcadia [g]													
39	Roseglen Street-Durfee Avenue/ Lower Azusa Road	Signalized	AM	0.608	B	0.609	B	0.001	NO	0.609	B	0.001	---
			PM	0.669	B	0.672	B	0.003	NO	0.672	B	0.003	---
			SAT	0.511	A	0.515	A	0.004	NO	0.515	A	0.004	---

[a] Level of Service (LOS) is based on the reported ICU value for signalized intersections and on the delay for unsignalized intersections. When LOS F is reached for an unsignalized intersection, the intersection becomes unstable and the calculated delay values become unreliable/unrealistic. Small increases in traffic volumes may result in very large increases in the calculated delay values which is not representative of actual conditions. Therefore, where calculated delay values are over 50.0 seconds (i.e., LOS F conditions by HCM definition), over-saturated conditions are expected and delay values of "> 50.0" seconds are reported in this table.

[b] City of San Gabriel intersection impact threshold criteria is as follows:

Final v/c	LOS	Project Related Increase in v/c
>=0.600 - 0.700	A,B	equal to or greater than 0.06
>=0.700 - 0.800	C	equal to or greater than 0.04
>=0.800 - 0.900	D	equal to or greater than 0.02
> 0.900	E,F	equal to or greater than 0.01

[c] City of Rosemead intersection impact threshold criteria is as follows:
- Change in v/c >= 0.02 and causing LOS F (v/c >= 1.00)
- Increase existing LOS F (v/c = 1.00) by v/c >= 0.02

[d] As none of the subject approaches are required to stop, no intersection delay values are computed pursuant to the HCM methodologies.

[e] Two-Way Stop-Controlled Intersection. Reported values represent the delays associated with the most constrained approach of the intersection.

[f] City of South El Monte intersection impact threshold criteria is as follows:
- Existing LOS A, B, C or D is degraded to LOS E or F.

[g] City of Arcadia intersection impact threshold criteria is as follows:
- Existing LOS A, B, C or D is degraded to LOS E or F.
- Increase existing LOS E or F by v/c >= 0.02

Table 11-4
OTHER JURISDICTIONS LEVELS OF SERVICE SUMMARY
YEAR 2035 FUTURE CONDITIONS
WEEKDAY AM, PM AND SATURDAY MID-DAY PEAK HOURS

				[1]		[2]				[3]			
NO.	INTERSECTION	TRAFFIC CONTROL	PEAK HOUR	YEAR 2035 FUTURE PRE-PROJECT W/ AG & REL. PROJECTS DELAY or V/C	LOS [a]	YEAR 2035 FUTURE WITH PROJECT BUILDOUT DELAY or V/C	LOS [a]	CHANGE V/C [(2)-(1)]	SIGNIF. IMPACT [e]	YEAR 2035 FUTURE WITH PROJECT BUILDOUT MITIGATION DELAY or V/C	LOS [a]	CHANGE V/C [(3)-(1)]	MITIGATED [e]
	City of San Gabriel [b]												
1	San Gabriel Boulevard/ Valley Boulevard	Signalized	AM	0.987	E	0.989	E	0.002	NO	0.989	E	0.002	---
			PM	1.162	F	1.166	F	0.004	NO	1.166	F	0.004	---
			SAT	1.184	F	1.190	F	0.006	NO	1.190	F	0.006	---
	City of Rosemead [c]												
2	Walnut Grove Avenue/ Valley Boulevard	Signalized	AM	0.924	E	0.927	E	0.003	NO	0.927	E	0.003	---
			PM	0.971	E	0.978	E	0.007	NO	0.978	E	0.007	---
			SAT	0.947	E	0.958	E	0.011	NO	0.958	E	0.011	---
3	Walnut Grove Avenue/ Garvey Avenue	Signalized	AM	0.901	E	0.904	E	0.003	NO	0.904	E	0.003	---
			PM	1.121	F	1.126	F	0.005	NO	1.126	F	0.005	---
			SAT	0.932	E	0.939	E	0.007	NO	0.939	E	0.007	---
4	Rosemead Boulevard (SR-164)/ Valley Boulevard	Signalized	AM	1.037	F	1.049	F	0.012	NO	0.999	E	-0.038	---
			PM	1.036	F	1.062	F	0.026	YES	1.012	F	-0.024	YES
			SAT	1.033	F	1.074	F	0.041	YES	1.024	F	-0.009	YES
5	Rosemead Boulevard (SR-164)/ Glendon Way-I-10 WB Ramps	Signalized	AM	0.910	E	0.921	E	0.011	NO	0.871	D	-0.039	---
			PM	0.944	E	1.006	F	0.062	YES	0.956	E	0.012	YES
			SAT	0.868	D	0.918	E	0.050	NO	0.868	D	0.000	---
6	Rosemead Boulevard (SR-164)/ I-10 EB Ramps	Yield Only	AM	[d]		[d]		[d]		[d]		[d]	
			PM	[d]		[d]		[d]		[d]		[d]	
			SAT	[d]		[d]		[d]		[d]		[d]	
7	Rosemead Boulevard (SR-164)/ Telstar Avenue	Signalized	AM	0.731	C	0.809	D	0.078	NO	0.721	C	-0.010	---
			PM	0.892	D	1.051	F	0.159	YES	0.892	D	0.000	YES
			SAT	0.670	B	0.926	E	0.256	NO	0.767	C	0.097	---
8	Rosemead Boulevard (SR-164)/ Whitmore Street	Signalized	AM	0.707	C	0.715	C	0.008	NO	0.715	C	0.008	---
			PM	0.898	D	0.914	E	0.016	NO	0.914	E	0.016	---
			SAT	0.618	B	0.646	B	0.028	NO	0.646	B	0.028	---
19	Temple City Boulevard/ Valley Boulevard	Signalized	AM	1.108	F	1.110	F	0.002	NO	1.110	F	0.002	---
			PM	1.045	F	1.047	F	0.002	NO	1.047	F	0.002	---
			SAT	0.759	C	0.763	C	0.004	NO	0.763	C	0.004	---
20	Temple City Boulevard/ Loftus Drive	Signalized	AM	0.900	D	0.904	E	0.004	NO	0.904	E	0.004	---
			PM	0.952	E	0.962	E	0.010	NO	0.962	E	0.010	---
			SAT	0.759	C	0.773	C	0.014	NO	0.773	C	0.014	---
21	Temple City Boulevard/I-10 WB Ramps/ Olney Street [e]	Two-Way Stop	AM	14.2	B	14.2	B	0.050	NO	14.2	B	0.050	---
			PM	27.5	D	27.5	D	0.007	NO	27.5	D	0.007	---
			SAT	18.5	C	18.5	C	0.142	NO	18.5	C	0.142	---
			AM	0.849		0.899				0.899			
			PM	0.915		0.922				0.922			
			SAT	0.690		0.832				0.832			
42	Rosemead Boulevard (SR-164)/ Lower Azusa Road	Signalized	AM	0.999	E	1.003	F	0.004	NO	1.003	F	0.004	---
			PM	0.988	E	0.996	E	0.008	NO	0.996	E	0.008	---
			SAT	0.924	E	0.938	E	0.014	NO	0.938	E	0.014	---
	City of South El Monte [f]												
9	Rosemead Boulevard (SR-164)/ Garvey Avenue	Signalized	AM	1.030	F	1.045	F	0.015	YES	0.995	E	-0.035	YES
			PM	1.083	F	1.092	F	0.009	YES	1.042	F	-0.041	YES
			SAT	1.046	F	1.086	F	0.040	YES	1.036	F	-0.010	YES
17	Chico Avenue/ Garvey Avenue	Signalized	AM	0.617	B	0.623	B	0.006	NO	0.623	B	0.006	---
			PM	0.770	C	0.781	C	0.011	NO	0.781	C	0.011	---
			SAT	0.819	D	0.837	D	0.018	NO	0.837	D	0.018	---
43	Rosemead Boulevard (SR-164)/ Rush Street	Signalized	AM	0.881	D	0.883	D	0.002	NO	0.883	D	0.002	---
			PM	0.882	D	0.887	D	0.005	NO	0.887	D	0.005	---
			SAT	0.682	B	0.688	B	0.006	NO	0.688	B	0.006	---
	City of Arcadia [g]												
39	Roseglen Street-Durfee Avenue/ Lower Azusa Road	Signalized	AM	0.643	B	0.644	B	0.001	NO	0.644	B	0.001	---
			PM	0.708	C	0.711	C	0.003	NO	0.711	C	0.003	---
			SAT	0.539	A	0.543	A	0.004	NO	0.543	A	0.004	---

[a] Level of Service (LOS) is based on the reported ICU value for signalized intersections and on the delay for unsignalized intersections. When LOS F is reached for an unsignalized intersection, the intersection becomes unstable and the calculated delay values become unreliable/unrealistic. Small increases in traffic volumes may result in very large increases in the calculated delay values which is not representative of actual conditions. Therefore, where calculated delay values are over 50.0 seconds (i.e., LOS F conditions by HCM definition), over-saturated conditions are expected and delay values of "> 50.0" seconds are reported in this table.

[b] City of San Gabriel intersection impact threshold criteria is as follows:

Final v/c	LOS	Project Related Increase in v/c
>=0.600 - 0.700	A,B	equal to or greater than 0.06
>=0.700 - 0.800	C	equal to or greater than 0.04
>=0.800 - 0.900	D	equal to or greater than 0.02
> 0.900	E,F	equal to or greater than 0.01

[c] City of Rosemead intersection impact threshold criteria is as follows:
- Change in v/c >= 0.02 and causing LOS F (v/c >= 1.00)
- Increase existing LOS F (v/c = 1.00) by v/c >= 0.02

[d] As none of the subject approaches are required to stop, no intersection delay values are computed pursuant to the HCM methodologies.

[e] Two-Way Stop-Controlled Intersection. Reported values represent the delays associated with the most constrained approach of the intersection.

[f] City of South El Monte intersection impact threshold criteria is as follows:
- Existing LOS A, B, C or D is degraded to LOS E or F.

[g] City of Arcadia intersection impact threshold criteria is as follows:
- Existing LOS A, B, C or D is degraded to LOS E or F.
- Increase existing LOS E or F by v/c >= 0.02

Table 11-5
CITY OF TEMPLE CITY LEVELS OF SERVICE SUMMARY
YEAR 2016 CONDITIONS
WEEKDAY AM, PM AND SATURDAY MID-DAY PEAK HOURS

			[1]		[2]		[3]				[4]				[5]				[6]			
NO.	INTERSECTION	PEAK HOUR	YEAR 2014 EXISTING V/C	LOS	YEAR 2016 W/ AMBIENT GROWTH V/C	LOS	YEAR 2016 W/ PHASE I PROJECT V/C	LOS	CHANGE V/C [(3)-(2)]	SIGNIF. IMPACT [a]	YEAR 2016 W/ PH 1 PROJ PROJECT MIT V/C	LOS	CHANGE V/C [(4)-(2)]	MITI-GATED	YEAR 2016 W/ RELATED PROJECTS V/C	LOS	CHANGE V/C [(5)-(2)]	SIGNIF. IMPACT [a]	YEAR 2016 W/ REGIONAL MITIGATION V/C	LOS	CHANGE V/C [(6)-(2)]	MITI-GATED
18	Temple City Boulevard/	AM	0.723	C	0.734	C	0.735	C	0.001	NO	0.735	C	0.001	---	0.812	D	0.078	YES	0.728	C	-0.006	YES
	Lower Azusa Road	PM	0.894	D	0.907	E	0.909	E	0.002	NO	0.909	E	0.002	---	0.982	E	0.075	YES	0.915	E	0.008	YES
		SAT	0.745	C	0.756	C	0.759	C	0.003	NO	0.759	C	0.003	---	0.793	C	0.037	NO	0.728	C	-0.028	---
41	Rosemead Boulevard (SR-164)	AM	0.827	D	0.839	D	0.843	D	0.004	NO	0.843	D	0.004	---	0.893	D	0.054	YES	0.843	D	0.004	YES
	Las Tunas Drive	PM	0.916	E	0.929	E	0.936	E	0.007	NO	0.936	E	0.007	---	0.989	E	0.060	YES	0.939	E	0.010	NO
		SAT	0.802	D	0.814	D	0.826	D	0.012	NO	0.826	D	0.012	---	0.914	E	0.100	YES	0.864	D	0.050	NO
44	Baldwin Avenue/	AM	0.445	A	0.451	A	0.452	A	0.001	NO	0.452	A	0.001	---	0.468	A	0.017	NO	0.468	A	0.017	---
	Olive Street	PM	0.468	A	0.474	A	0.475	A	0.001	NO	0.475	A	0.001	---	0.497	A	0.023	NO	0.497	A	0.023	---
		SAT	0.479	A	0.485	A	0.486	A	0.001	NO	0.486	A	0.001	---	0.503	A	0.018	NO	0.503	A	0.018	---
45	Baldwin Avenue/	AM	0.874	D	0.886	D	0.887	D	0.001	NO	0.837	D	-0.049	---	0.874	D	-0.012	NO	0.874	D	-0.012	---
	Lower Azusa Road	PM	0.859	D	0.871	D	0.880	D	0.009	NO	0.830	D	-0.041	---	0.887	D	0.016	NO	0.887	D	0.016	---
		SAT	0.806	D	0.818	D	0.844	D	0.026	YES	0.794	C	-0.024	YES	0.851	D	0.033	YES	0.851	D	0.033	NO

[a] The City of Temple City utilizes the County of Los Angeles traffic thresholds of significance. According to the County of Los Angeles Department of Public Works' "Traffic Impact Analysis Report Guidelines," January 1, 1997, Page 6: "an impact is considered significant if the project related increase in the volume-to-capacity ratio (v/c) equals or exceeds the thresholds shown below:"

Level of Service	Pre-Project ICU	Project-Related Increase in V/C
C	> 0.700 - 0.800	equal to or greater than 0.040
D	> 0.800 - 0.900	equal to or greater than 0.020
E/F	> 0.900	equal to or greater than 0.010

Table 11-6
CITY OF TEMPLE CITY LEVELS OF SERVICE SUMMARY
YEAR 2019 CONDITIONS
WEEKDAY AM, PM AND SATURDAY MID-DAY PEAK HOURS

			[1]		[2]		[3]				[4]				[5]				[6]			
NO.	INTERSECTION	PEAK HOUR	YEAR 2014 EXISTING V/C	LOS	YEAR 2019 W/ AMBIENT GROWTH V/C	LOS	YEAR 2019 W/ PROJECT BUILD-OUT V/C	LOS	CHANGE V/C [(3)-(2)]	SIGNIF. IMPACT [a]	YEAR 2019 W/ PROJECT MITIGATION V/C	LOS	CHANGE V/C [(4)-(2)]	MITI-GATED	YEAR 2019 W/ RELATED PROJECTS V/C	LOS	CHANGE V/C [(5)-(2)]	SIGNIF. IMPACT [a]	YEAR 2019 W/ REGIONAL MITIGATION V/C	LOS	CHANGE V/C [(6)-(2)]	MITI-GATED
18	Temple City Boulevard/	AM	0.723	C	0.749	C	0.751	C	0.002	NO	0.751	C	0.002	---	0.828	D	0.079	YES	0.743	C	-0.006	YES
	Lower Azusa Road	PM	0.894	D	0.927	E	0.930	E	0.003	NO	0.930	E	0.003	---	1.002	F	0.075	YES	0.936	E	0.009	YES
		SAT	0.745	C	0.772	C	0.776	C	0.004	NO	0.776	C	0.004	---	0.810	D	0.038	YES	0.744	C	-0.028	YES
41	Rosemead Boulevard (SR-164)	AM	0.827	D	0.857	D	0.862	D	0.005	NO	0.862	D	0.005	---	0.912	E	0.055	YES	0.862	D	0.005	YES
	Las Tunas Drive	PM	0.916	E	0.950	E	0.959	E	0.009	NO	0.959	E	0.009	---	1.013	F	0.063	YES	0.963	E	0.013	NO
		SAT	0.802	D	0.832	D	0.845	D	0.013	NO	0.845	D	0.013	---	0.934	E	0.102	YES	0.884	D	0.052	NO
44	Baldwin Avenue/	AM	0.445	A	0.460	A	0.461	A	0.001	NO	0.461	A	0.001	---	0.478	A	0.018	NO	0.478	A	0.018	---
	Olive Street	PM	0.468	A	0.483	A	0.485	A	0.002	NO	0.485	A	0.002	---	0.508	A	0.025	NO	0.508	A	0.025	---
		SAT	0.479	A	0.495	A	0.497	A	0.002	NO	0.497	A	0.002	---	0.515	A	0.020	NO	0.515	A	0.020	---
45	Baldwin Avenue/	AM	0.874	D	0.906	E	0.910	E	0.004	NO	0.860	D	-0.046	---	0.897	D	-0.009	NO	0.897	D	-0.009	---
	Lower Azusa Road	PM	0.859	D	0.890	D	0.905	E	0.015	YES	0.855	D	-0.035	YES	0.913	E	0.023	YES	0.913	E	0.023	NO
		SAT	0.806	D	0.836	D	0.867	D	0.031	YES	0.817	D	-0.019	YES	0.875	D	0.039	YES	0.875	D	0.039	NO

[a] The City of Temple City utilizes the County of Los Angeles traffic thresholds of significance. According to the County of Los Angeles Department of Public Works' "Traffic Impact Analysis Report Guidelines," January 1, 1997, Page 6: "an impact is considered significant if the project related increase in the volume-to-capacity ratio (v/c) equals or exceeds the thresholds shown below:"

Level of Service	Pre-Project ICU	Project-Related Increase in V/C
C	> 0.700 - 0.800	equal to or greater than 0.040
D	> 0.800 - 0.900	equal to or greater than 0.020
E/F	> 0.900	equal to or greater than 0.010

Table 11-7
CITY OF TEMPLE CITY LEVELS OF SERVICE SUMMARY
YEAR 2035 CONDITIONS
WEEKDAY AM, PM AND SATURDAY MID-DAY PEAK HOURS
CITY OF TEMPLE CITY

			[1]		[2]		[3]				[4]				[5]				[6]			
NO.	INTERSECTION	PEAK HOUR	YEAR 2014 EXISTING V/C	LOS	YEAR 2035 W/ AMBIENT GROWTH V/C	LOS	YEAR 2035 W/ PROJECT BUILD-OUT V/C	LOS	CHANGE V/C [(3)-(2)]	SIGNIF. IMPACT [a]	YEAR 2035 W/ PROJECT MITIGATION V/C	LOS	CHANGE V/C [(4)-(2)]	MITI-GATED	YEAR 2035 W/ RELATED PROJECTS V/C	LOS	CHANGE V/C [(5)-(2)]	SIGNIF. IMPACT [a]	YEAR 2035 W/ REGIONAL MITIGATION V/C	LOS	CHANGE V/C [(6)-(2)]	MITI-GATED
18	Temple City Boulevard/	AM	0.723	C	0.795	C	0.797	C	0.002	NO	0.797	C	0.002	---	0.873	D	0.078	YES	0.787	C	-0.008	YES
	Lower Azusa Road	PM	0.894	D	0.986	E	0.988	E	0.002	NO	0.988	E	0.002	---	1.060	F	0.074	YES	0.993	E	0.007	YES
		SAT	0.745	C	0.819	D	0.823	D	0.004	NO	0.823	D	0.004	---	0.857	D	0.038	YES	0.791	C	-0.028	YES
41	Rosemead Boulevard (SR-164)	AM	0.827	D	0.911	E	0.915	E	0.004	NO	0.915	E	0.004	---	0.965	E	0.054	YES	0.915	E	0.004	YES
	Las Tunas Drive	PM	0.916	E	1.010	F	1.019	F	0.009	NO	1.019	F	0.009	---	1.073	F	0.063	YES	1.023	F	0.013	NO
		SAT	0.802	D	0.883	D	0.897	D	0.014	NO	0.897	D	0.014	---	0.985	E	0.102	YES	0.935	E	0.052	NO
44	Baldwin Avenue/	AM	0.445	A	0.485	A	0.486	A	0.001	NO	0.486	A	0.001	---	0.503	A	0.018	NO	0.503	A	0.018	---
	Olive Street	PM	0.468	A	0.510	A	0.512	A	0.002	NO	0.512	A	0.002	---	0.535	A	0.025	NO	0.535	A	0.025	---
		SAT	0.479	A	0.522	A	0.525	A	0.003	NO	0.525	A	0.003	---	0.542	A	0.020	NO	0.542	A	0.020	---
45	Baldwin Avenue/	AM	0.874	D	0.963	E	0.967	E	0.004	NO	0.917	E	-0.046	---	0.954	E	-0.009	NO	0.954	E	-0.009	---
	Lower Azusa Road	PM	0.859	D	0.946	E	0.961	E	0.015	YES	0.911	E	-0.035	YES	0.968	E	0.022	YES	0.968	E	0.022	NO
		SAT	0.806	D	0.888	D	0.919	E	0.031	YES	0.869	D	-0.019	YES	0.926	E	0.038	YES	0.926	E	0.038	NO

[a] The City of Temple City utilizes the County of Los Angeles traffic thresholds of significance. According to the County of Los Angeles Department of Public Works' "Traffic Impact Analysis Report Guidelines," January 1, 1997, Page 6: "an impact is considered significant if the project related increase in the volume-to-capacity ratio (v/c) equals or exceeds the thresholds shown below:"

Level of Service	Pre-Project ICU	Project-Related Increase in V/C
C	> 0.700 - 0.800	equal to or greater than 0.040
D	> 0.800 - 0.900	equal to or greater than 0.020
E/F	> 0.900	equal to or greater than 0.010

weekday AM peak hour, weekday PM peak hour and/or the Saturday mid-day peak hour. Incremental but not significant impacts are noted at the City of San Gabriel study intersection. The future year 2016 with Phase I project (existing, ambient growth to year 2016, related projects, and Phase I project) traffic volumes at the study intersections during the weekday AM peak hour, weekday PM peak hour and Saturday mid-day peak hour are provided in *Figures 10-7*, *10-8* and *10-9*, respectively.

11.1.3 Future Year 2019 With Project Build-out Conditions

As shown in column [2] of *Table 11-3*, application of the San Gabriel's threshold criteria to the "Future Year 2019 With Project Build-out" scenario indicates that the proposed project (i.e., build-out of Phases I and II) is not expected to create a significant impact at the City of San Gabriel study intersection during the weekday AM peak hour, weekday PM peak hour and/or the Saturday mid-day peak hour. Incremental but not significant impacts are noted at the City of San Gabriel study intersection. The future year 2019 with project build-out (existing, ambient growth to year 2019, related projects, and project build-out) traffic volumes at the study intersections during the weekday AM peak hour, weekday PM peak hour and Saturday mid-day peak hour are provided in *Figures 10-13*, *10-14* and *10-15*, respectively.

11.1.4 Future Year 2035 With Project Build-out Conditions

As shown in column [2] of *Table 11-4*, application of the City of San Gabriel's threshold criteria to the "Future Year 2035 With Project Build-out" scenario indicates that the proposed project (i.e., build-out of Phases I and II) is not expected to create a significant impact at the City of San Gabriel study intersections during the weekday AM peak hour, weekday PM peak hour and/or the Saturday mid-day peak hour. Incremental but not significant impacts are noted at the San Gabriel study intersection. The future year 2035 with project build-out (existing, ambient growth to year 2035, related projects, and project build-out) traffic volumes at the study intersections during the weekday AM peak hour, weekday PM peak hour and Saturday mid-day peak hour are provided in *Figures 10-19*, *10-20* and *10-21*, respectively.

11.2 City of Rosemead Traffic Analysis

11.2.1 Existing With Project Build-out Conditions

As shown in column [2] of *Table 11-1*, application of the City of Rosemead's threshold criteria to the "Existing With Project" scenario indicates that the proposed project (i.e., build-out of Phases I and II) is expected to create a significant impact at one of the 11 City of Rosemead study intersections during the weekday AM peak hour, weekday PM peak hour and/or the Saturday mid-day peak hour. The proposed project is expected to create a significant impact at the following location according to the City of Rosemead's impact criteria during the peak hour(s) shown below:

- Int. No. 7: Rosemead Boulevard/Telstar Avenue Weekday PM Peak Hour

Incremental but not significant impacts are noted at the remaining City of Rosemead study intersections. The existing with project build-out (existing plus project build-out) traffic volumes at

the study intersections during the weekday AM peak hour, weekday PM peak hour and Saturday mid-day peak hour are provided in *Figures 10-1*, *10-2* and *10-3*, respectively.

11.2.2 Future Year 2016 With Phase I Project Conditions

As shown in column [2] of *Table 11-2*, application of the Rosemead's threshold criteria to the "Future Year 2016 With Phase I Project" scenario indicates that the Phase I project is not expected to create a significant impact at any of the 11 City of Rosemead study intersections during the weekday AM peak hour, weekday PM peak hour and/or the Saturday mid-day peak hour. Incremental but not significant impacts are noted at the City of Rosemead study intersections. The future year 2016 with Phase I project (existing, ambient growth to year 2016, related projects, and Phase I project) traffic volumes at the study intersections during the weekday AM peak hour, weekday PM peak hour and Saturday mid-day peak hour are provided in *Figures 10-7*, *10-8* and *10-9*, respectively.

11.2.3 Future Year 2019 With Project Build-out Conditions

As shown in column [2] of *Table 11-3*, application of the City of Rosemead's threshold criteria to the "Future Year 2019 With Project Build-out" scenario indicates that the proposed project (i.e., build-out of Phases I and II) is expected to create a significant traffic impact at two of the 11 City of Rosemead study intersections during the weekday AM peak hour, weekday PM peak hour and/or the Saturday mid-day peak hour. The project at build-out is expected to create significant traffic impacts at the following locations according to the City of Rosemead's impact criteria during the peak hour(s) shown below:

- Int. No. 4: Rosemead Boulevard/Valley Boulevard — Weekday PM Peak Hour
  Saturday Mid-day Peak Hour
- Int. No. 7: Rosemead Boulevard/Telstar Avenue — Weekday PM Peak Hour

Incremental but not significant impacts are noted at the remaining City of Rosemead study intersections. The future year 2019 with project build-out (existing, ambient growth to year 2019, related projects, and project build-out) traffic volumes at the study intersections during the weekday AM peak hour, weekday PM peak hour and Saturday mid-day peak hour are provided in *Figures 10-13*, *10-14* and *10-15*, respectively.

11.2.4 Future Year 2035 With Project Build-out Conditions

As shown in column [2] of *Table 11-4*, application of the City of Rosemead's threshold criteria to the "Future Year 2035 With Project Build-out" scenario indicates that the proposed project (i.e., build-out of Phases I and II) is expected to create a significant impact at three of the 11 City of Rosemead study intersections during the weekday AM peak hour, weekday PM peak hour and/or the Saturday mid-day peak hour. The project at build-out is expected to create significant impacts at the following locations according to the City of Rosemead's impact criteria during the peak hour(s) shown below:

- Int. No. 4: Rosemead Boulevard/Valley Boulevard — Weekday PM Peak Hour
  Saturday Mid-day Peak Hour
- Int. No. 5: Rosemead Bl./Glendon Way-I-10 WB Ramps — Weekday PM Peak Hour
- Int. No. 7: Rosemead Boulevard/Telstar Avenue — Weekday PM Peak Hour

Incremental but not significant impacts are noted at the remaining City of Rosemead study intersections. The future year 2035 with project build-out (existing, ambient growth to year 2035, related projects, and project build-out) traffic volumes at the study intersections during the weekday AM peak hour, weekday PM peak hour and Saturday mid-day peak hour are provided in *Figures 10-19*, *10-20* and *10-21*, respectively.

11.3 City of South El Monte Traffic Analysis

11.3.1 Existing With Project Build-out Conditions

As shown in column [2] of *Table 11-1*, application of the City of South El Monte's threshold criteria to the "Existing With Project" scenario indicates that the proposed project (i.e., build-out of Phases I and II) is expected to create a significant impact at one of the three City of South El Monte study intersections during the weekday AM peak hour, weekday PM peak hour and/or the Saturday mid-day peak hour. The proposed project is expected to create a significant impact at the following location according to the City of South El Monte's impact criteria during the peak hour(s) shown below:

- Int. No. 9: Rosemead Boulevard/Garvey Avenue — Weekday AM Peak Hour
  Weekday PM Peak Hour
  Saturday Mid-day Peak Hour

Incremental but not significant impacts are noted at the remaining City of South El Monte study intersections. The existing with project build-out (existing plus project build-out) traffic volumes at the study intersections during the weekday AM peak hour, weekday PM peak hour and Saturday mid-day peak hour are provided in *Figures 10-1*, *10-2* and *10-3*, respectively.

11.3.2 Future Year 2016 With Phase I Project Conditions

As shown in column [2] of *Table 11-2*, application of the City of South El Monte's threshold criteria to the "Future Year 2016 With Phase I Project" scenario indicates that the Phase I project is expected to create a significant impact at one of the three City of South El Monte study intersections during the weekday AM peak hour, weekday PM peak hour and/or the Saturday mid-day peak hour. The Phase I project is expected to create significant impacts at the following location according to the City of South El Monte's impact criteria during the peak hour(s) shown below:

- Int. No. 9: Rosemead Boulevard/Garvey Avenue — Weekday AM Peak Hour
  Weekday PM Peak Hour
  Saturday Mid-day Peak Hour

Incremental but not significant impacts are noted at the remaining City of South El Monte study intersections. The future year 2016 with Phase I project (existing, ambient growth to year 2016, related projects, and Phase I project) traffic volumes at the study intersections during the weekday AM peak hour, weekday PM peak hour and Saturday mid-day peak hour are provided in *Figures 10-7*, *10-8* and *10-9*, respectively.

11.3.3 Future Year 2019 With Project Build-out Conditions

As shown in column [2] of *Table 11-3*, application of the City of South El Monte's threshold criteria to the "Future Year 2019 With Project Build-out" scenario indicates that the proposed project (i.e., build-out of Phases I and II) is expected to create a significant traffic impact at one of the three City of South El Monte study intersections during the weekday AM peak hour, weekday PM peak hour and/or the Saturday mid-day peak hour. The project at build-out is expected to create significant impacts at the following location according to the City of South El Monte's impact criteria during the peak hour(s) shown below:

- Int. No. 9: Rosemead Boulevard/Garvey Avenue — Weekday AM Peak Hour
  Weekday PM Peak Hour
  Saturday Mid-day Peak Hour

Incremental but not significant impacts are noted at the remaining City of South El Monte study intersections. The future year 2019 with project build-out (existing, ambient growth to year 2019, related projects, and project build-out) traffic volumes at the study intersections during the weekday AM peak hour, weekday PM peak hour and Saturday mid-day peak hour are provided in *Figures 10-13*, *10-14* and *10-15*, respectively.

11.3.4 Future Year 2035 With Project Build-out Conditions

As shown in column [2] of *Table 11-4*, application of the City of South El Monte's threshold criteria to the "Future Year 2035 With Project Build-out" scenario indicates that the proposed project (i.e., build-out of Phases I and II) is expected to create a significant impact at one of the three City of South El Monte study intersections during the weekday AM peak hour, weekday PM peak hour and/or the Saturday mid-day peak hour. The project at build-out is expected to create significant impacts at the following location according to the City of South El Monte's impact criteria during the peak hour(s) shown below:

- Int. No. 9: Rosemead Boulevard/Garvey Avenue — Weekday AM Peak Hour

Weekday PM Peak Hour

Saturday Mid-day Peak Hour

Incremental but not significant impacts are noted at the remaining City of South El Monte study intersection. The future year 2035 with project build-out (existing, ambient growth to year 2035, related projects, and project build-out) traffic volumes at the study intersections during the weekday AM peak hour, weekday PM peak hour and Saturday mid-day peak hour are provided in *Figures 10-19*, *10-20* and *10-21*, respectively.

11.4 City of Arcadia Traffic Analysis

11.4.1 Existing With Project Build-out Conditions

As shown in column [2] of *Table 11-1*, application of the City of Arcadia's threshold criteria to the "Existing With Project" scenario indicates that the proposed project (i.e., build-out of Phases I and II) is not expected to create a significant impact at the City of Arcadia study intersection during the weekday AM peak hour, weekday PM peak hour and/or the Saturday mid-day peak hour. Incremental but not significant impacts are noted at the City of Arcadia study intersection. The existing with project build-out (existing plus project build-out) traffic volumes at the study intersections during the weekday AM peak hour, weekday PM peak hour and Saturday mid-day peak hour are provided in *Figures 10-1*, *10-2* and *10-3*, respectively.

11.4.2 Future Year 2016 With Phase I Project Conditions

As shown in column [2] of *Table 11-2*, application of the City of Arcadia's threshold criteria to the "Future Year 2016 With Phase I Project" scenario indicates that the Phase I project is not expected to create a significant impact at the City of Arcadia study intersection during the weekday AM peak hour, weekday PM peak hour and/or the Saturday mid-day peak hour. Incremental but not significant impacts are noted at the City of Arcadia study intersection. The future year 2016 with Phase I project (existing, ambient growth to year 2016, related projects, and Phase I project) traffic volumes at the study intersections during the weekday AM peak hour, weekday PM peak hour and Saturday mid-day peak hour are provided in *Figures 10-7*, *10-8* and *10-9*, respectively.

11.4.3 Future Year 2019 With Project Build-out Conditions

As shown in column [2] of *Table 11-3*, application of the City of Arcadia's threshold criteria to the "Future Year 2019 With Project Build-out" scenario indicates that the proposed project (i.e., build-out of Phases I and II) is not expected to create a significant impact at the City of Arcadia study intersection during the weekday AM peak hour, weekday PM peak hour and/or the Saturday mid-day peak hour. Incremental but not significant impacts are noted at the City of Arcadia study intersection. The future year 2019 with project build-out (existing, ambient growth to year 2019, related projects, and project build-out) traffic volumes at the study intersections during the weekday AM peak hour, weekday PM peak hour and Saturday mid-day peak hour are provided in *Figures 10-13*, *10-14* and *10-15*, respectively.

11.4.4 Future Year 2035 With Project Build-out Conditions

As shown in column [2] of *Table 11-4*, application of the City of Arcadia's threshold criteria to the "Future Year 2035 With Project Build-out" scenario indicates that the proposed project (i.e., build-out of Phases I and II) is not expected to create a significant impact at the City of Arcadia study intersections during the weekday AM peak hour, weekday PM peak hour and/or the Saturday mid-day peak hour. Incremental but not significant impacts are noted at the City of Arcadia study intersection. The future year 2035 with project build-out (existing, ambient growth to year 2035, related projects, and project build-out) traffic volumes at the study intersections during the weekday AM peak hour, weekday PM peak hour and Saturday mid-day peak hour are provided in *Figures 10-19*, *10-20* and *10-21*, respectively.

11.5 City of Temple City Traffic Analysis

11.5.1 Future Year 2016 With Phase I Project Conditions

As shown in column [3] of *Table 11-5*, application of the City of Temple City's threshold criteria to the "Future Year 2016 With Phase I Project" scenario indicates that the Phase I project is expected to create a significant impact at one of the four City of Temple City study intersections during the weekday AM peak hour, weekday PM peak hour and/or the Saturday mid-day peak hour. The Phase I project is expected to create significant impacts at the following location according to the City of Temple City's impact criteria during the peak hour(s) shown below:

- Int. No. 45: Baldwin Avenue/Lower Azusa Road Saturday Mid-day Peak Hour

Incremental but not significant impacts are noted at the remaining City of Temple City study intersections.

11.5.2 Future Year 2019 With Project Build-out Conditions

As shown in column [3] of *Table 11-6*, application of the City of Temple City's threshold criteria to the "Future Year 2019 With Project Build-out" scenario indicates that the proposed project (i.e., build-out of Phases I and II) is expected to create a significant traffic impact at one of the four City of Temple City study intersections during the weekday AM peak hour, weekday PM peak hour and/or the Saturday mid-day peak hour. The project at build-out is expected to create significant impacts at the following location according to the City of Temple City's impact criteria during the peak hour(s) shown below:

- Int. No. 45: Baldwin Avenue/Lower Azusa Road Weekday PM Peak Hour

  Saturday Mid-day Peak Hour

Incremental but not significant impacts are noted at the remaining City of Temple City study intersections.

11.5.3 Future Year 2035 With Project Build-out Conditions

As shown in column [3] of *Table 11-7*, application of the City of Temple City's threshold criteria to the "Future Year 2035 With Project Build-out" scenario indicates that the proposed project (i.e., build-out of Phases I and II) is expected to create a significant impact at 1 of the 4 City of Temple City study intersections during the weekday AM peak hour, weekday PM peak hour and/or the Saturday mid-day peak hour. The project at build-out is expected to create significant impacts at the following locations according to the City of Temple City's impact criteria during the peak hour(s) shown below:

- Int. No. 45: Baldwin Avenue/Lower Azusa Road — Weekday PM Peak Hour
  Saturday Mid-day Peak Hour

Incremental but not significant impacts are noted at the remaining City of Temple City study intersections.

12.0 TRANSPORTATION MITIGATION PROGRAM

Based on the traffic analyses summarized in Sections 10.0 and 11.0, it was determined that the proposed project would result in direct, significant traffic impacts at eight (8) intersections and contribute to significant cumulative traffic impacts at two (2) additional intersections in the "Future Year 2016 With Phase I Project" conditions. The proposed project would result in direct, significant traffic impacts at 11 intersections and contribute to significant cumulative traffic impacts at two (2) additional intersections in the "Year 2019 With Project Build-out" conditions. Further, it was determined that the proposed project would result in direct, significant traffic impacts at 14 intersections and contribute to significant cumulative traffic impacts at two (2) additional intersections in the "Future Year 2035 With Project Build-out" conditions.

For informational purposes, it was determined that the proposed project could result in significant traffic impacts at eight (8) intersections in the "Existing with Project Build-out" conditions. While it is recognized that many study intersections are located entirely within the City of El Monte, many locations are either located entirely within or shared with another jurisdiction, including the State of California Department of Transportation (Caltrans). ***Table 12-1*** summarizes the significant traffic impacts forecast for each analysis scenario at the study area intersections.

The following sections provide an overview of feasible transportation improvement mitigation measures that are anticipated to reduce the project's traffic impacts and project's contribution to significant cumulative traffic impacts to less than significant levels, to the extent feasible. Transportation mitigation measures typically consist of improvements such as transportation demand management measures aimed at reducing overall trip generation, traffic signal installations/modifications, intersection restriping and roadway widening to accommodate additional travel lanes and overall traffic signal coordination systems. Development and implementation of traffic signal system enhancements through an Intelligent Transportation System (ITS) network has documented benefits in improving vehicle delays and reducing traffic congestion.

It is critical to note in this introduction to mitigation measures, that the traffic analysis studied various locations located within multiple jurisdictions. As such, it has become evident to LLG Engineers through additional research that each jurisdiction along a particular corridor (e.g., along Rosemead Boulevard which is multi-jurisdictional between Caltrans and the Cities of El Monte, South El Monte, and Rosemead depending on location) discusses the existing traffic signal system in slightly different terms, but all regional plans (e.g., General Plans) discuss the goal of integrating a fully coordinated traffic signal system. Thus, the mitigation descriptions below reflect the multi-jurisdictional nature of the recommended improvements.

12.1 Intelligent Transportation System (ITS) Enhancements

12.1.1 Caltrans Traffic Signal Management & Surveillance System (TSMSS) Project

Caltrans is in the process of implementing their Traffic Signal Management & Surveillance System (TSMSS) Project throughout each of their 13 Districts within the State of California (i.e., Districts 1 through 12 and the Headquarters District [Sacramento]). An initial deployment has already occurred

Table 12-1
SUMMARY OF IMPACTED INTERSECTIONS BY ANALYSIS SCENARIO [1]

NO.	INTERSECTION	PEAK HOUR	YEAR 2014 EXISTING WITH PROJECT BUILD-OUT CONDITIONS		YEAR 2016 WITH PHASE I PROJECT CONDITIONS		YEAR 2019 WITH PROJECT BUILD-OUT CONDITIONS		YEAR 2035 WITH PROJECT BUILD-OUT CONDITIONS	
			IMPACT	JURISDICTION	IMPACT	JURISDICTION	IMPACT	JURISDICTION	IMPACT	JURISDICTION
4	Rosemead Boulevard (SR-164)/	PM	---		----		YES	Rosemead	YES	Rosemead
	Valley Boulevard	SAT	---		---		YES	Rosemead	YES	Rosemead
5	Rosemead Boulevard (SR-164)/ Glendon Way-I-10 WB Ramps	PM	---		---		---		YES	Rosemead
7	Rosemead Boulevard (SR-164)/ Telstar Avenue	PM	YES	El Monte & Rosemead	----		YES	El Monte & Rosemead	YES	El Monte & Rosemead
9	Rosemead Boulevard (SR-164)/	AM	YES	South El Monte	YES	South El Monte	YES	South El Monte	YES	South El Monte
	Garvey Avenue	PM	YES	South El Monte	YES	South El Monte	YES	South El Monte	YES	South El Monte
		SAT	YES	South El Monte	YES	South El Monte	YES	South El Monte	YES	South El Monte
10	Aerojet Avenue/	AM	YES	El Monte	YES	El Monte	---		---	
	Flair Drive-I-10 EB Ramps	PM	YES	El Monte	YES	El Monte	YES	El Monte	YES	El Monte
11	Aerojet Avenue/	AM	----		YES	El Monte	YES	El Monte	YES	El Monte
	Telstar Avenue	PM	YES	El Monte	YES	El Monte	YES	El Monte	YES	El Monte
		SAT	YES	El Monte	YES	El Monte	YES	El Monte	YES	El Monte
13	Rio Hondo Avenue/	PM	YES	El Monte	YES	El Monte	YES	El Monte	YES	El Monte
	Telstar Avenue	SAT	YES	El Monte	YES	El Monte	YES	El Monte	YES	El Monte
16	Telstar Avenue/ Flair Drive	PM	----		----		YES	El Monte	YES	El Monte
18	Temple City Boulevard/	AM	n/a		n/a		n/a		n/a	
	Lower Azusa Road [2]	PM	n/a		n/a		n/a		n/a	
		SAT	n/a		n/a		n/a		n/a	
22	Baldwin Avenue/ Valley Boulevard	PM	----		----		----		YES	El Monte
23	Baldwin Avenue/	AM	YES	El Monte	YES	El Monte	YES	El Monte	YES	El Monte
	Loftus Drive	PM	----		----		YES	El Monte	YES	El Monte
		SAT	----		----		----		YES	El Monte

[1] Based on analysis methodology and threshold criteria by corresponding jurisdiction.
[2] Based on County of Los Angeles methodology and criteria per City of Temple City guidelines, significant cumulative project impacts are forecast at this location.

Table 12-1 (Continued)
SUMMARY OF IMPACTED INTERSECTIONS BY ANALYSIS SCENARIO [1]

NO.	INTERSECTION	PEAK HOUR	YEAR 2014 EXISTING WITH PROJECT BUILD-OUT CONDITIONS		YEAR 2016 WITH PHASE I PROJECT CONDITIONS		YEAR 2019 WITH PROJECT BUILD-OUT CONDITIONS		YEAR 2035 WITH PROJECT BUILD-OUT CONDITIONS	
			IMPACT	JURISDICTION	IMPACT	JURISDICTION	IMPACT	JURISDICTION	IMPACT	JURISDICTION
24	Baldwin Avenue/	AM	YES	El Monte	YES	El Monte	YES	El Monte	YES	El Monte
	Flair Drive-I-10 EB Ramps	PM	YES	El Monte	YES	El Monte	YES	El Monte	YES	El Monte
		SAT	YES	El Monte	YES	El Monte	YES	El Monte	YES	El Monte
27	Santa Anita Avenue/	PM	----		----		----		YES	El Monte
	Valley Boulevard									
40	Durfee Avenue/	AM	YES	El Monte	YES	El Monte	YES	El Monte	YES	El Monte
	Ramona Boulevard	PM	----		----		YES	El Monte	YES	El Monte
41	Rosemead Boulevard (SR-164)/	AM	n/a		n/a		n/a		n/a	
	Las Tunas Drive [2]	PM	n/a		n/a		n/a		n/a	
		SAT	n/a		n/a		n/a		n/a	
45	Baldwin Avenue/	PM	n/a		----		YES	Temple City	YES	Temple City
	Lower Azusa Road [2]	SAT	n/a		YES	Temple City	YES	Temple City	YES	Temple City

[1] Based on analysis methodology and threshold criteria by corresponding jurisdiction.
[2] Based on County of Los Angeles methodology and criteria per City of Temple City guidelines, significant cumulative project impacts are forecast at this location.

throughout several Caltrans' Districts, including several within Caltrans District 7, which includes the City of El Monte and all adjoining jurisdictions reviewed as part of this traffic study.

As a general overview to integrated traffic signal management and surveillance systems, the following discussion relates to a system description employed throughout the greater Los Angeles region by the City of Los Angeles Department of Transportation (LADOT) and is somewhat similar to the system being employed throughout the State by Caltrans. The City of Los Angeles system was the first to implement this system in response to the 1984 Olympics held in Los Angeles. This system was referred to as the Automated Traffic Surveillance and Control, or ATSAC system. The system was developed and managed by the City and it provided a state-of-the-art, interconnected and coordinated traffic signal system which monitored and managed street traffic automatically by establishing a set number of pre-timed timing cycles that could be employed based on time of day. With the ATSAC system, traffic throughout a roadway network could be monitored through installation of loop detectors in roadway pavement near intersection approaches and traffic surveillance cameras (i.e., closed circuit television cameras [CCTV]). Various pre-set timing programs were then implemented in response to fluctuating traffic demands, either automatically or manually. The ATSAC equipment was installed at signalized intersections on either a corridor or network-wide basis. ATSAC was and still is a powerful tool for reducing delay and minimizing traffic congestion. Statistics provided by LADOT indicated that the ATSAC system reduced travel time by about 12%, intersection delay by about 32% and intersection stops by about 30%, when compared to traditional traffic signal timing optimization practices. In conducting planning studies, LADOT conservatively assumes a minimum seven percent (7%) increase in intersection capacity as compared to pre-ATSAC conditions following implementation of the traffic signal system enhancements.

As a supplement to ATSAC, LADOT has introduced the Adaptive Traffic Control System (ATCS) which further enhances the ability of the traffic signal controller to adjust traffic signal timing at intersections on a real-time basis in response to changing traffic volume patterns. The real-time data collected on the system is automatically fed into the City's focal traffic management center (TMC) in order to effectively monitor and manage traffic flow on the system. Based on field studies conducted by LADOT, ATCS reduces travel delays by at least three percent (3%) in addition to those improvements already realized by the standard ATSAC system.

The Caltrans TSMS system is very similar in that when implemented system-wide throughout the State, similar improvements could be expected as Caltrans will develop an adaptive arterial signal coordination system that will make real-time adjustments to the splits and offsets of baseline time-of-day (TOD) plans, within specified bounds, in response to current and dynamic traffic demands. All traffic signal controllers will either be or be compatible with the state-of-the-art 2070 type controllers and other components such as advanced loop detection, fiber optic interconnect, CCTV cameras, etc. will be employed. To be conservative, this improvement should reduce overall congestion and improve operations by at least five percent (5%).

12.1.2 General Plan Discussions of ITS Enhancements

The City of El Monte General Plan ("Vision El Monte") Circulation Element highlights its Goal C-3, which states the following, "A well-managed traffic management system that maximizes the operational efficiency of existing roadways, encourages the balance of transportation modes, and improves the safety and livability of neighborhoods." Specifically, Goal C-3.6, Traffic Signal Management notes, "Pursue development and implementation of a Traffic Management System, with a traffic management center in the City or a joint center with adjacent jurisdictions and/or the County of Los Angeles, to coordinate and manage the City's traffic signal system, integrate operations on City streets, and implement advanced traffic management technologies where appropriate."

The El Monte General Plan notes that El Monte participates in the San Gabriel Valley Transportation Forum (SGVTF) to address the creation of an ITS. The SGVTF's purpose is to design, develop and deploy an advanced traffic management system specifically so that traffic signals can be synchronized and ITS can be integrated across jurisdictional boundaries. Synchronizing traffic signals along arterials and optimizing signal settings will result in smoother traffic flows and reduced idling. This will in turn save travel time, diminish wear and tear on vehicles and further reduce emissions. The City of El Monte is committed to exploring and utilizing feasible technologies in traffic detection and operational management. The Circulation Element notes that this could entail traffic monitoring, signal coordination, traffic signal synchronization, bus priority schemes, dynamic electronic signage and smart pedestrian crossings. The Circulation Element proposes policies to support ITS and programs to develop and implement a system for El Monte in conjunction with neighboring communities in the San Gabriel Valley. Policies in "Vision El Monte" are included for the City to pursue both the development and implementation of a Traffic Management System.

Similar references to traffic signal management and synchronization systems are contained in several other surrounding jurisdictions' General Plans (e.g., City of Rosemead, City of Temple City, City of South El Monte, etc.). As ITS improvements must be installed on a corridor and system-wide level to realize the full benefit and they have been determined to be beyond the responsibility of a single project applicant, a fair-share contribution is recommended. The following sections identify specifically which mitigation measures have been considered for each significantly impacted intersection location.

12.2 Physical Transportation Mitigation Measures

The following mitigation measures/improvements are proposed for those intersections shown to be significantly impacted in *Table 12-1*.

12.2.1 City of El Monte Transportation Mitigation Measures

Intersection No. 7: Rosemead Boulevard/Telstar Avenue

As discussed with City of El Monte staff, a City-led improvement project is fully funded and construction has commenced. This improvement consists of the installation of a second southbound left-turn only lane and modification of the westbound approach to provide one left-turn only lane, one combination left-right turn lane and one right-turn only lane, as well as the required traffic signal modification to implement new traffic signal phasing at the intersection. This City improvement project has been assumed to be completed by the Year 2016 and as such is assumed in the Year 2016 baseline (pre-project) analyses.

As the intersection is located along the Rosemead Boulevard corridor, project mitigation for this intersection is expected to include the future traffic signal synchronization project under the TSMSS. As such, a five percent (5%) capacity enhancement and overall reduction in delay has been assumed. Since the ITS improvement alone is not expected to fully reduce the project's significant impact to less than significant levels, a portion of the City's long-term General Plan improvement is also proposed as mitigation. While the City of El Monte General Plan traffic study includes the eventual widening along Rosemead Boulevard from a six-lane roadway to an eight-lane roadway in association with the City-planned conversion of Rosemead Boulevard (SR-164), only the northbound Rosemead Boulevard improvement is needed to fully reduce the project's significant traffic impacts (in addition to traffic signal synchronization improvement). Mitigation consists of widening the northbound approach at Telstar Avenue to allow the conversion from three through travel lanes and a right-turn only lane to four through travel lanes and one right-turn only lane. Since this widening improvement is a portion of the City's long-term General Plan improvement measure and any near-term construction is not entirely within the City's control (due to the fact that the intersection is currently operating under shared jurisdiction with Caltrans), a fair-share payment into a special City-designated account will be provided by the project applicant. While these improvements are expected to reduce the project's traffic impacts to less than significant levels, due to the multi-jurisdictional and timing issues it has been conservatively assumed that impacts remain significant and unavoidable.

Intersection No. 10: Aerojet Avenue/Flair Drive-I-10 Eastbound Ramps (Direct Project Mitigation)

Mitigation for this intersection consists of the funding of a traffic signal installation and restriping of the southbound approach to provide one left-turn lane and one combination left/through/right-turn lane. ***Appendix C*** contains a copy of the traffic signal warrant prepared for this location. The *MUTCD* Warrant No. 3: Peak Hour Traffic Volume Warrant is satisfied for the intersection for the year 2019 with Project Build-out condition. It is important to note that the intersection is also under joint jurisdiction with Caltrans and therefore, the construction of the improvement is not entirely within the City's control. While the associated Caltrans-required Permit Engineering and Evaluation Report (PEER), subsequent traffic engineering design plan preparation and the eventual construction will be a requirement of the project applicant, the timing of Caltrans review and approval is not yet

determined. Therefore, while these improvements are expected to reduce the project's traffic impacts to less than significant levels, due to the multi-jurisdictional and timing issues it has been conservatively concluded that the project's significant traffic impacts at this location would remain significant and unavoidable (until such time as the improvement is completed). It is expected that the City will condition this improvement to be completed prior to the issuance of a Certificate of Occupancy for the outlet mall component of the project site.

Intersection No. 11: Aerojet Avenue/Telstar Avenue (Direct Project Mitigation)

Mitigation for this intersection involves installation of a traffic signal and restriping the southbound approach to provide one combination left-through lane and one right-turn-only lane and restriping the westbound approach to provide one combination left-through lane and one combination through/right-turn lane. This improvement is expected to reduce the project's significant traffic impacts to less than significant levels.

Intersection No. 13: Rio Hondo Avenue/Telstar Avenue (Direct Project Mitigation)

Mitigation for this intersection consists of installation of a traffic signal and roadway restriping to provide: 1) one left-turn only lane and one shared through/right-turn lane on the eastbound approach to Rio Hondo Avenue, and 2) one shared left/through lane and a right-turn only lane on the southbound approach to Telstar Avenue. Adequate curb-to-curb width exists to accommodate the above measures and a new traffic signal at this location would fall approximately 1,300 east of Aerojet Avenue and 1,300 feet west of Fletcher Avenue. *Appendix C* contains a copy of the traffic signal warrant prepared for this location. The *MUTCD* Warrant No. 3: Peak Hour Traffic Volume Warrant is satisfied for the intersection for the year 2019 with Project Build-out condition. Implementation of this mitigation measure is expected to reduce the project's traffic impacts to less than significant levels.

Intersection No. 16: Telstar Avenue/Flair Drive (Direct Project Mitigation)

Mitigation for this intersection consists of roadway restriping to provide: 1) one through lane and one shared through/right-turn lane on the eastbound approach to Telstar Avenue, and 2) one left-turn only lane and one right-turn only lane on the northbound approach to Flair Drive. Adequate curb-to-curb width exists to accommodate the above measures. Implementation of this mitigation measure is expected to reduce the project's traffic impacts to less than significant levels.

Intersection No. 22: Baldwin Avenue/Valley Boulevard (Direct Project Mitigation)

Mitigation for this intersection consists of a portion of the improvement listed in the City of El Monte General Plan Circulation Element. Mitigation for this intersection consists of restriping the eastbound Valley Boulevard approach at Baldwin Avenue from one left-turn lane, one through lane, and one shared through-right turn lane to consist of one left-turn lane, two through lanes and one shared through-right turn lane. It is important to note that only the General Plan eastbound improvement is needed and not the westbound improvement which consists of implementing the full

six-lane cross section along Valley Boulevard at Baldwin Avenue. Implementation of this mitigation measure would require the restriction of on-street parking during the PM peak hour, along the south side of Valley Boulevard both east and west of Baldwin Avenue. This improvement is expected to reduce the project's significant traffic impacts to less than significant levels.

Intersection No. 23: Baldwin Avenue/Loftus Drive

Mitigation for this intersection could consist of the installation of an additional southbound through lane. It is important to note that the southbound improvement for this intersection is consistent with a portion of the improvement contained in the City of El Monte General Plan Circulation Element. The southbound improvement would require roadway widening and restriping and would result in the conversion of the approach from one left-turn lane, one through lane and one right-turn only lane to one left-turn lane, two through lanes and one right-turn only lane. A traffic signal modification would also be required since the southwest corner of the intersection would need to be widened. Since this widening improvement is a portion of the City's long-term General Plan improvement measure, a fair-share payment into a special City-designated account will be provided by the project applicant. While these improvements are expected to reduce the project's traffic impacts to less than significant levels, due to the timing issue it has been conservatively assumed that impacts remain significant and unavoidable.

Intersection No. 24: Baldwin Avenue/Flair Drive-I-10 Eastbound Ramps

Mitigation for this intersection consists of a fair-share contribution towards a traffic signal installation at the intersection and widening along the west side of Baldwin Avenue to provide an exclusive southbound right-turn only lane. This improvement is also currently being proposed as mitigation for the Walmart project, which at the time of this writing has not yet been entitled. *Appendix* C contains a copy of the traffic signal warrant prepared for this location. The *MUTCD* Warrant No. 3: Peak Hour Traffic Volume Warrant is satisfied for the intersection for the year 2019 with Project Build-out condition. It is important to note that the intersection is also under joint jurisdiction with Caltrans and therefore, the construction of the improvement is not entirely within the City's control. While the associated Caltrans-required Permit Engineering and Evaluation Report (PEER) and traffic engineering design plans can be prepared through the fair-share funding, the timing of Caltrans review and approval is not yet determined. Therefore, while these improvements are expected to reduce the project's traffic impacts to less than significant levels, due to the multi-jurisdictional and timing issues it has been conservatively concluded that the project's significant traffic impacts at this location would remain significant and unavoidable (until such time as the improvement is completed).

Intersection No. 27: Santa Anita Avenue/Valley Boulevard (Direct Project Mitigation)

This intersection is identified as an enhanced intersection location in the City of El Monte General Plan Circulation Element. Mitigation for this intersection consists of the conversion of the southbound right-turn only lane to a shared through-right turn lane. The measure can be accommodated within the existing right-of-way and would involve roadway restriping and

implementation of a short red curb zone (i.e., approximately 50 feet) along the west side of Santa Anita Avenue just south of Valley Boulevard. It is noted that the commercial development on the southeast corner of the intersection does have an off-street parking lot that is anticipated to accommodate the demand associated with the two on-street parking spaces. In addition, this mitigation is consistent with the number of southbound through lanes provided along the Santa Anita Avenue corridor south of the Valley Mall intersection, which is located just south of Valley Boulevard, and is expected to reduce the project's impacts to less than significant levels.

Intersection No. 40: Durfee Avenue/Ramona Boulevard (Direct Project Mitigation)

Mitigation for this intersection involves a minor restriping of the existing two-way left-turn area on Ramona Boulevard, west of Durfee Avenue. The existing two-way left-turn lane on Ramona Boulevard currently is not striped to allow direct entry of northbound left-turning Durfee Avenue motorists. Thus, a northbound left-turning vehicle (i.e., a motorist destined to westbound Ramona Boulevard) must wait for an acceptable gap in both the opposing eastbound and westbound through traffic volumes. By restriping the eastern end of the two-way left turn lane (just west of Durfee Avenue) to allow legal entry for northbound left-turning motorists, a formal two-stage gap acceptance can be provided, thus decreasing significantly the northbound approach vehicle delays. In other words, through this minor roadway restriping, a northbound left-turning motorist on Durfee Avenue can legally turn into the two-way left turn lane west of the intersection and correspondingly only require an acceptable gap in the opposing eastbound through traffic flow, and not in both the opposing eastbound and westbound traffic flows. This improvement is expected to reduce the project's significant traffic impacts to less than significant levels.

12.2.2 Other City Jurisdictional Transportation Mitigation Measures

City of Rosemead

Intersection No. 4: Rosemead Boulevard (SR-164)/Valley Boulevard

Based on a review of the City of Rosemead General Plan Update document as adopted by Rosemead City Council on April 13, 2010, implementation of corridor traffic signal synchronization with adaptive control technology is proposed along a total of five major corridors within the City Rosemead. Rosemead Boulevard between Lower Azusa Road and Whitmore Street is shown in the General Plan as one of the five corridors recommended for signal synchronization. The following language is quoted from the City of Rosemead General Plan Update Circulation Chapter:

> "Adaptive signal control technologies have the goals of reducing travel times, vehicle delay, and overall congestion. According to studies conducted by the City of Los Angeles Department of Transportation (LADOT), increases in roadway capacity by as much as ten percent can be achieved through the implementation of these signal system technologies. This gain appears in the form of less congestion, delays, and stops at the included roadway intersections. Corridor synchronization improvements,

> however, can only be effective in implementation where there are multiple traffic signals along a corridor that can facilitate movements of platoons of vehicles while minimizing delay on the major street… Local implementation of such a system in Rosemead can be implemented as an extension of the Intelligent Transportation System (ITS) projects currently being planned and implemented by the County of Los Angeles Department of Public Works. Rosemead will become part of the San Gabriel Valley ITS system, and would potentially have the ability (with additional funding sources) to build upon the initial subregional system set up by the County."

As previously mentioned, discussions with Caltrans staff have indicated that Rosemead Boulevard is planned for a future traffic signal synchronization project under their TSMSS. This intersection is shared jurisdiction between City of Rosemead and Caltrans. While the City of Rosemead General Plan Update indicates that as much as a ten percent capacity improvement can be achieved, in order to provide a conservative analysis only a five percent (5%) capacity enhancement and overall reduction in delay has been assumed with this synchronization system. For informational purposes, based on discussions with City of Rosemead staff, the City's Los Angeles County Metropolitan Transportation Authority (Metro) 2011 Call for Projects application for the Valley Boulevard Capacity Enhancement Project (between Temple City Boulevard on the east and Charlotte Avenue on the west) was reviewed and approved by Metro. While no conceptual plans are available at this time, the application noted that the design and construction would consist of additional travel lanes and center medians along Valley Boulevard. Since it is not able to be determined at this time if any specific improvements will be possible at the Rosemead Boulevard intersection (as it is under shared jurisdiction with Caltrans) only the ITS improvement is recommended as mitigation. As ITS improvements must be installed on a corridor and system-wide level to realize the full benefit and they have been determined to be beyond the responsibility of a single project applicant, a fair-share contribution by the project applicant will be made. While these improvements are expected to reduce the project's traffic impacts to less than significant levels, due to the fact that the construction of the improvement is not entirely within the City of El Monte's control (since the intersection is currently operating under shared jurisdiction between the City of Rosemead and Caltrans), it has been conservatively assumed that impacts remain significant and unavoidable.

<u>Intersection No. 5: Rosemead Boulevard (SR-164)/Glendon Way-I-10 Westbound Ramps</u>

Based on a review of the City of Rosemead General Plan Update document as adopted by Rosemead City Council on April 13, 2010, implementation of corridor traffic signal synchronization with adaptive control technology is proposed along a total of five major corridors within the City Rosemead. Rosemead Boulevard between Lower Azusa Road and Whitmore Street is shown in the General Plan as one of the five corridors recommended for signal synchronization. The following language is quoted from the City of Rosemead General Plan Update Circulation Chapter:

> "Adaptive signal control technologies have the goals of reducing travel times, vehicle delay, and overall congestion. According to studies conducted by the City of Los Angeles Department of Transportation (LADOT), increases in roadway capacity by

as much as ten percent can be achieved through the implementation of these signal system technologies. This gain appears in the form of less congestion, delays, and stops at the included roadway intersections. Corridor synchronization improvements, however, can only be effective in implementation where there are multiple traffic signals along a corridor that can facilitate movements of platoons of vehicles while minimizing delay on the major street… Local implementation of such a system in Rosemead can be implemented as an extension of the Intelligent Transportation System (ITS) projects currently being planned and implemented by the County of Los Angeles Department of Public Works. Rosemead will become part of the San Gabriel Valley ITS system, and would potentially have the ability (with additional funding sources) to build upon the initial subregional system set up by the County."

As previously mentioned, discussions with Caltrans staff have indicated that Rosemead Boulevard is planned for a future traffic signal synchronization project under their TSMSS. This intersection is shared jurisdiction between City of Rosemead and Caltrans. While the City of Rosemead General Plan Update indicates that as much as a ten percent capacity improvement can be achieved, in order to provide a conservative analysis only a five percent (5%) capacity enhancement and overall reduction in delay has been assumed with this synchronization system. As ITS improvements must be installed on a corridor and system-wide level to realize the full benefit and they have been determined to be beyond the responsibility of a single project applicant, a fair-share contribution by the project applicant will be made. While these improvements are expected to reduce the project's traffic impacts to less than significant levels, due to the fact that the construction of the improvement is not entirely within the City of El Monte's control (since the intersection is currently operating under shared jurisdiction between the City of Rosemead and Caltrans), it has been conservatively assumed that impacts remain significant and unavoidable. Intersection No. 7: Rosemead Boulevard/Telstar Avenue (Shared Jurisdiction between Cities of Rosemead and El Monte and Caltrans)

Based on discussions with City of Rosemead staff, while the City of Rosemead borders this intersection to the west, it has been clarified that the responsibility for the on-going maintenance and operations is shared between the jurisdictions of the City of El Monte and Caltrans. As such, refer to Section 12.2.1 of this report for a summary of the mitigation.

City of South El Monte

Intersection No. 9: Rosemead Boulevard (SR-164)/Garvey Avenue

The South El Monte General Plan Circulation Element contains policies as it relates to each of the City's transportation goals. Goal 2.0 of the General Plan Circulation Element states, "Maintain easy, convenient access to and from South El Monte via the Pomona Freeway and Rosemead Boulevard." More specifically, Policy 2.2 states, "Support Caltrans efforts to facilitate smooth traffic flow along Rosemead Boulevard."

As previously mentioned, discussions with Caltrans staff have indicated that Rosemead Boulevard is planned for a future traffic signal synchronization project under their TSMSS and would initially extend between the I-10 Freeway in the City of El Monte to the southern City of El Monte City limit, with plans to eventually connect to the SR-60 Freeway. As such, this intersection would fall within these extents of the synchronization system and is operating under shared jurisdiction between the City of South El Monte and Caltrans. While other cities (e.g., the City of Rosemead) note in their General Plan that as much as a ten percent capacity improvement can be achieved with signal synchronization, in order to provide a conservative analysis only a five percent (5%) capacity enhancement and overall reduction in delay has been assumed with the Caltrans TSMSS. As ITS improvements must be installed on a corridor and system-wide level to realize the full benefit and they have been determined to be beyond the responsibility of a single project applicant, a fair-share contribution by the project applicant will be made. While these improvements are expected to reduce the project's traffic impacts to less than significant levels, due to the fact that the construction of the improvement is not entirely within the City of El Monte's control (since the intersection is currently operating under shared jurisdiction between the City of South El Monte and Caltrans), it has been conservatively assumed that impacts remain significant and unavoidable.

City of Temple City

Intersection No. 18: Temple City Boulevard/Lower Azusa Road

The proposed project is expected to contribute to a significant cumulative traffic impact at this intersection during all analysis scenarios based on the City of Temple City analysis methodology and criteria, which is consistent with methodologies employed by Los Angeles County. As noted in the City of Temple City General Plan, the Temple City Boulevard corridor (i.e., specifically the Temple City Boulevard/Lower Azusa Road intersection) was noted for improvement via installation of a new traffic signal controller with the NIC coordination module, new conduit, and loop detection. The City's current General Plan was adopted in April 1987 and it is assumed that the improvements noted above have since been installed as presence loop detection was noted in field documentation efforts.

In late 2014, the City is beginning its General Plan update process (i.e., referred to as "Temple City 2050 - Mid-Century Plan"). While that effort is projected to extend into year 2016, it is expected that the Temple City Boulevard and/or Lower Azusa Road corridors will be included in a future traffic signal synchronization project, either through joint efforts with Caltrans and/or other jurisdictions, agencies, e.g., Los Angeles County. The County of Los Angeles currently has a comprehensive traffic signal synchronization system and information exchange network in place (including the operation of the LA County Traffic Management Center) and is continuing to expand to incorporate additional areas.

As noted above, while other cities note in their General Plans that as much as a ten percent capacity improvement can be achieved with signal synchronization (e.g., the City of Rosemead), in order to provide a conservative analysis only a five percent (5%) capacity enhancement and overall reduction

in delay has been assumed with a future adaptive traffic signal synchronization system upgrade. In addition, an eastbound right-turn only lane can be restriped. As ITS improvements must be installed on a corridor and system-wide level to realize the full benefit and they have been determined to be beyond the responsibility of a single project applicant, a fair-share contribution by the project applicant will be made. While these improvements are expected to reduce the cumulative traffic impacts to less than significant levels, due to the fact that the construction of the improvement is not entirely within the City of El Monte's control (i.e., it is under the jurisdiction of the City of Temple City), it has been conservatively assumed that impacts remain significant and unavoidable.

Finally, it is important to note that additional right-of-way appears quite limited in order to provide additional through travel lanes. In addition, the update to City's General Plan Circulation Element will likely contain specific goals and policy descriptions, including complete streets components (e.g., added bicycle lanes, increased transit accessibility, wider sidewalks to better enhance pedestrian circulation, etc.) that would likely render additional roadway widenings as being in conflict with other stated goals and policies of the City's General Plan.

Intersection No. 41: Rosemead Boulevard (SR-164)/Las Tunas Drive

As noted in the Temple City General Plan, Rosemead Boulevard is planned for a future traffic signal synchronization project either through joint efforts with Caltrans and/or other jurisdictions, agencies, e.g., Los Angeles County. The County of Los Angeles currently has a comprehensive traffic signal synchronization system and information exchange network in place (including the operation of the LA County Traffic Management Center) and is continuing to expand to incorporate additional areas. Further, Rosemead Boulevard within the City of Temple City is no longer under shared jurisdiction with Caltrans as previously noted in the City's General Plan. While other cities (e.g., the City of Rosemead) note in their General Plan that as much as a ten percent capacity improvement can be achieved with signal synchronization, in order to provide a conservative analysis only a five percent (5%) capacity enhancement and overall reduction in delay has been assumed. As ITS improvements must be installed on a corridor and system-wide level to realize the full benefit and they have been determined to be beyond the responsibility of a single project applicant, a fair-share contribution by the project applicant will be made. Since this improvement is expected to only partially mitigate the significant cumulative traffic impact and due to the fact that the construction of the improvement is not entirely within the City of El Monte's control (i.e, it is under the jurisdiction of the City of Temple City), it has been conservatively assumed that impacts remain significant and unavoidable. It is important to note that with the recent beautification project implemented along Rosemead Boulevard within the City, additional right-of-way is not available which would allow the implementation of additional through travel or turn lanes. In addition, the removal of other complete streets components is not recommended (e.g., the removal of bicycle lanes and wider sidewalks), as that would likely be in conflict with other stated goals and policies of the City's General Plan.

Intersection No. 45: Baldwin Avenue/Lower Azusa Road

The proposed project is expected to result in a direct significant traffic impact at this intersection during both Phase I and Build-out conditions as well as contribute to a significant cumulative traffic impacts at this intersection, based on County of Los Angeles analysis methodology and adopted significance criteria. As noted in the City of Temple City General Plan, the Baldwin Avenue corridor (i.e., specifically the Baldwin Avenue/Lower Azusa Road intersection) was noted for improvement. The City's current General Plan was adopted in April 1987 and it is assumed that the improvements have since been installed as was noted in the field documentation efforts.

In late 2014, the City is beginning its General Plan update process (i.e., referred to as "Temple City 2050 - Mid-Century Plan"). While that effort is projected to extend into year 2016, it is expected that the Baldwin Avenue and/or Lower Azusa Road corridors will be included in a future traffic signal synchronization project, either through joint efforts with Caltrans and/or other jurisdictions, agencies, e.g., Los Angeles County. The County of Los Angeles currently has a comprehensive traffic signal synchronization system and information exchange network in place (including the operation of the LA County Traffic Management Center) and is continuing to expand to incorporate additional areas.

As noted above, while other cities note in their General Plans that as much as a ten percent capacity improvement can be achieved with signal synchronization (e.g., the City of Rosemead), in order to provide a conservative analysis only a five percent (5%) capacity enhancement and overall reduction in delay has been assumed with a future adaptive traffic signal synchronization system upgrade. As ITS improvements must be installed on a corridor and system-wide level to realize the full benefit and they have been determined to be beyond the responsibility of a single project applicant, a fair-share contribution by the project applicant will be made. Since this improvement is expected to only partially mitigate the significant cumulative traffic impact (but with recognition that it would fully mitigate the project's direct significant traffic impacts) and due to the fact that the construction of the improvement is not entirely within the City of El Monte's control (i.e, it is under the jurisdiction of the City of Temple City), it has been conservatively assumed that impacts remain significant and unavoidable. It is important to note that additional right-of-way appears quite limited in order to provide additional through travel lanes. In addition, the update to City's General Plan Circulation Element will likely contain specific goals and policy descriptions, including complete streets components (e.g., bicycle lanes, increased transit accessibility, wider sidewalks to better enhance pedestrian circulation, etc.). As such, additional roadway widenings are not recommended as they will likely conflict with other stated goals and policies of the City's General Plan.

12.3 Transportation Demand Management Measures

The project will comply with the City's Transportation Demand Management Program as outlined in Chapter 5.92, Transportation Demand Management (TDM) Program in the City of El Monte Zoning Code. It is expected that compliance with the City's TDM Program will result in further reductions in project trip generation beyond that analyzed in the traffic analysis. Since the exact level of additional trip reduction cannot be determined at this time, this traffic study does not employ a

specific level of trip reduction due to the TDM Program (e.g., an additional ten percent trip reduction credit). Therefore, the results of the traffic analysis can be considered worst-case. Chapter 5.92.020 of the City's Code states the following:

5.92.020 Transportation demand and trip reduction measures

A. Applicability of Requirements.

1. Prior to approval of any development project, the applicant shall make provisions for, as a minimum, all of the following applicable transportation demand management and trip reduction measures.

2. This chapter shall not apply to projects for which a development application has been deemed "complete" by the city pursuant to Government Code Section 65943, or for which a notice of preparation for a draft environmental impact report has been circulated or for which an application for a building permit has been received, prior to the effective date of the ordinance codified in this chapter.

3. All facilities and improvements constructed or otherwise required shall be maintained in a state of good repair.

B. Development Standards.

1. Nonresidential development of twenty-five thousand (25,000) square feet or more shall provide the following to the satisfaction of the city:

a. A bulletin board, display case, or kiosk displaying transportation information located where the greatest number of employees are likely to see it. Information in the area shall include, but is not limited to, the following:

i. Current maps, routes and schedules for public transit routes serving the site;

ii. Telephone numbers for referrals on transportation information including numbers for the regional ridesharing agency and local transit operators;

iii. Ridesharing promotional material supplied by commuter-oriented organizations;

iv. Bicycle route and facility information, including regional/local bicycle maps and bicycle safety information;

iv. A listing of facilities available for carpoolers, vanpoolers, bicyclists, transit riders and pedestrians at the site.

2. Nonresidential development of fifty thousand (50,000) square feet or more shall comply with subsection (B) (1) of this section and shall provide all of the following measures to the satisfaction of the city:

a. Not less than ten (10) percent of employee parking area, shall be located as close as is practical to the employee entrance(s), and shall be reserved for use by potential carpool/vanpool vehicles, without displacing handicapped and customer parking needs. This preferential carpool/vanpool parking area shall be identified on the site plan upon application for building permit, to the satisfaction of city. A statement that preferential carpool/vanpool spaces for employees are available and a description of the method for obtaining such spaces must be included on the required transportation information board. Spaces will be signed/striped as demand warrants; provided that at all times at least one space for projects of fifty thousand (50,000) square feet to one hundred thousand (100,000) square feet and two spaces for projects over one hundred thousand (100,000) square feet will be signed/striped for carpool/vanpool vehicles.

b. Preferential parking spaces reserved for vanpools must be accessible to vanpool vehicles. When located within a parking structure, a minimum vertical interior clearance of seven (7) feet two (2) inches shall be provided for those spaces and accessways to be used by such vehicles. Adequate turning radii and parking space dimensions shall also be included in vanpool parking areas.

c. Bicycle racks or other secure bicycle parking shall be provided to accommodate four (4) bicycles per the first 50,000 square feet of nonresidential development and one bicycle per each additional fifty thousand (50,000) square feet of nonresidential development. Calculations which result in a fraction of 0.5 or higher shall be rounded up to the nearest whole number. A bicycle parking facility may also be a fully enclosed space or locker accessible only to the owner or operator of the bicycle, which protects the bike from inclement weather. Specific facilities and location (e.g., provision of racks, lockers, or locked room) shall be to the satisfaction of the city.

3. Nonresidential development of one hundred thousand (100,000) square feet or more shall comply with subsections (B) (1) and (B) (2) of this

section, and shall provide all of the following measures to the satisfaction of city:

a. A safe and convenient zone in which vanpool and carpool vehicles may deliver or board their passengers;

b. Sidewalks or other designated pathways following direct and safe routes from the external pedestrian circulation system to each building in the development;

c. If determined necessary by the city to mitigate the project impact, bus stop improvements must be provided. The city will consult with the local bus service providers in determining appropriate improvements. When locating bus stops and/or planning building entrances, entrances must be designed to provide safe and efficient access to nearby transit stations/stops;

d. Safe and convenient access from the external circulation system to bicycle parking facilities on-site.

12.4 Determination of Fair-Share Contribution Percentages

The methodology and corresponding calculations of the project's pro-rata fair-share percentages associated with the identified fair-share intersection mitigation measures are summarized in ***Table 12-2***. The method used for these calculations was based on the total project-generated approach traffic volumes at each affected study intersection during the significantly impacted peak hour(s) divided by the project plus other development (related) projects traffic volumes on those same approaches for the same peak hour(s). It should be noted that neither existing traffic volumes nor ambient growth traffic volumes are included in the calculations. As shown in *Table 12-2*, the proposed project's fair share contributions toward the improvements range from a low of 2.7 percent to a high of 58.0 percent.

Table 12-2
PRO-RATA PERCENTAGE OF IMPROVEMENT MEASURES [1]

Pro-Rata Percentage Methodology

A project's pro-rata percentage of mitigation costs at study intersections conditioned for the subject project should be calculated using AM, PM and/or Saturday peak hour traffic volumes. The project's percentage share is derived by dividing project traffic by project plus other related projects traffic. It should be noted that existing traffic and ambient growth traffic volumes are not included in the calculations.

$$\frac{\text{Project Traffic}}{\text{Project + Other Related Projects Traffic}}$$

The following equation is provided to assist in calculating the project's pro-rata percentage to implement roadway mitigation improvement measures:

$$P = \frac{Vp}{Vp + Vc}$$

where:

P	=	Project's pro-rate percentage for cumulative mitigation measure
Vp	=	AM, PM and/or Saturday Peak Hour volume at the intersection generated by the project
Vc	=	Cumulative (other related projects) AM, PM and/or Saturday Peak Hour volume at the intersection

Study Intersection(s) Calculations

	Intersection	AM, PM and/or Saturday Traffic Volumes		Calculation	Percentage of Impact
4	Rosemead Boulevard (SR-164)/ Valley Boulevard	Vp =	344	P = 344 / (344) + (1,751 - 0) =	**16.4 %**
		Vc =	1,751		
5	Rosemead Boulevard (SR-164)/ Glendon Way-I-10 WB Ramps	Vp =	381	P = 381 / (381) + (741 - 0) =	**34.0 %**
		Vc =	741		
7	Rosemead Boulevard (SR-164)/ Telstar Avenue	Vp =	700	P = 700 / (700) + (839 - 0) =	**45.5 %**
		Vc =	839		
9	Rosemead Boulevard (SR-164)/ Garvey Avenue	Vp =	502	P = 502 / (502) + (3,036 - 0) =	**14.2 %**
		Vc =	3,036		
18	Temple City Boulevard/ Lower Azusa Road	Vp =	55	P = 55 / (55) + (1,951 - 0) =	**2.7 %**
		Vc =	1,951		
23	Baldwin Avenue/ Loftus Drive	Vp =	1,008	P = 1,008 / (1,008) + (1,509 - 0) =	**40.0 %**
		Vc =	1,509		
24	Baldwin Avenue/ Flair Drive-I-10 EB Ramps	Vp =	1,858	P = 1,858 / (1,858) + (1,346 - 0) =	**58.0 %**
		Vc =	1,346		
41	Rosemead Boulevard (SR-164)/ Las Tunas Drive	Vp =	177	P = 177 / (177) + (2,759 - 0) =	**6.0 %**
		Vc =	2,759		
45	Baldwin Avenue/ Lower Azusa Road	Vp =	160	P = 160 / (160) + (1,454 - 0) =	**9.9 %**
		Vc =	1,454		

[1] Source: Traffic Impact Analysis Report Preparation Guidelines, County of Los Angeles, January 1, 1997.

13.0 CONGESTION MANAGEMENT PROGRAM TRAFFIC IMPACT ASSESSMENT

The Congestion Management Program (CMP) is a state-mandated program that was enacted by the California State Legislature with the passage of Proposition 111 in 1990. The program is intended to address the impact of local growth on the regional transportation system.

As required by the 2010 Congestion Management Program, a Traffic Impact Assessment (TIA) has been prepared to determine the potential impacts on designated monitoring locations on the CMP highway system. The analysis has been prepared in accordance with procedures outlined in the *2010 Congestion Management Program*, Los Angeles County Metropolitan Transportation Authority, October 2010.

According to Section D.9.1 (Appendix D, page D-6) of the 2010 CMP manual, the criteria for determining a significant transportation impact is listed below:

> "A significant transportation impact occurs when the proposed project increases traffic demand on a CMP facility by 2% of capacity (V/C $\geq$ 0.02), causing or worsening LOS F (V/C > 1.00); if the facility is already at LOS F, a significant impact occurs when the proposed project increases traffic demand on a CMP facility by 2% of capacity (V/C $\geq$ 0.02)."

The CMP impact criteria apply for analysis of both intersection and freeway monitoring locations.

13.1 Intersections

The following CMP intersection monitoring locations in the project vicinity have been identified:

No. 131	Rosemead Boulevard/Valley Boulevard
No. 142	Rosemead Boulevard/Garvey Avenue
No. 146	Rosemead Boulevard/Las Tunas Drive

The CMP TIA guidelines require that intersection monitoring locations must be examined if the proposed project will add 50 or more trips during either the weekday AM or PM peak hours. The proposed project will add 50 or more trips during either the weekday AM or PM peak hours (i.e., of adjacent street traffic) at CMP monitoring intersections, as stated in the CMP manual as the threshold criteria for a traffic impact assessment. Therefore, as summarized in previous sections, these intersections have been included for review of potential impacts to intersection monitoring locations that are part of the CMP highway system.

13.2 Freeways

The following CMP freeway monitoring location in the project vicinity has been identified:

- CMP Station — Location

  Seg. No. 1016 — Interstate 10 at Rosemead Boulevard

The CMP TIA guidelines require that freeway monitoring locations must be examined if the proposed project will add 150 or more trips (in either direction) during either the weekday AM or PM peak periods. The proposed project will add 150 or more trips (in either direction) during either the weekday AM or PM peak hours to CMP freeway monitoring locations which is the threshold for preparing a traffic impact assessment, as stated in the CMP manual. Therefore, as summarized in Section 14.0 of this report, this segment (as well as others) has been reviewed for potential impacts to freeway monitoring locations that are part of the CMP highway system. In addition, coordination with Caltrans has occurred as part of the preparation of this traffic study.

13.3 Transit Impact Review

As required by the *2010 Congestion Management Program*, a review has been made of the potential impacts of the project on transit service. As discussed in Subsection 5.5 herein, existing transit service is provided in the vicinity of the proposed project.

The project trip generation, as shown in *Table 7–1*, was adjusted by values set forth in the CMP (i.e., person trips equal 1.4 times vehicle trips, and transit trips equal 3.5 percent of the total person trips) to estimate transit trip generation. Pursuant to the CMP guidelines, the proposed project is forecast to generate demand for 36 transit trips during the weekday AM peak hour and 69 transit trips during the weekday PM peak hour. Over a 24-hour period, the proposed project is forecast to generate demand for 1,045 weekday daily transit trips The calculations are as follows:

- Weekday AM Peak Hour = 725 × 1.4 × 0.035 = 36 Transit Trips
- Weekday PM Peak Hour = 1,416 × 1.4 × 0.035 = 69 Transit Trips
- Weekday Daily Trips = 21,317 × 1.4 × 0.035 = 1,045 Transit Trips

As shown in *Table 5–3*, 26 bus/rail lines and routes are provided adjacent to or in close proximity the project site. As outlined in *Table 5–3*, under the "No. of Buses/Trains During Peak Hour" column, these six transit lines provide services for an average of (i.e., average of the directional number of buses/trains during the peak hours) roughly 132 and 126 buses/trains during the weekday AM and PM peak hours, respectively. Therefore, based on the above calculated weekday AM and PM peak hour transit trips, this would correspond to less than one additional transit rider per bus/train. Thus, given the number of project-generated transit trips per bus/train, no project impacts on existing or future transit services in the project area are expected to occur as a result of the proposed project.

14.0 CALIFORNIA DEPARTMENT OF TRANSPORTATION ANALYSIS

14.1 Freeway Analysis

A supplemental freeway analysis was prepared based on the latest edition of the Highway Capacity Manual (HCM 2010) operational analysis methodologies pursuant to the California Department of Transportation's (Caltrans) *Guide for the Preparation of Traffic Impact Studies*[13]. According to the Caltrans document, the LOS for operating State highway facilities is based upon measures of effectiveness (MOEs). For mainline freeway segments, the MOE is determined based on density in passenger cars per mile per lane (pc/mi/ln). Caltrans endeavors to maintain a target LOS at the transition between LOS "C" and LOS "D" on State highway facilities, however, Caltrans acknowledges that this may not always be feasible and recommends that the lead agency consult with Caltrans to determine the appropriate target LOS. If an existing State highway facility is operating at less than the appropriate target LOS, the existing MOE should be maintained.

The following mainline freeway segments along the I-10, I-605 and I-710 Freeways have been identified for analysis based on their proximity to the project site and the expected level of project-generated traffic. These segments are forecast to experience a relatively greater percentage of project-related traffic than other mainline freeway segment locations:

- I-10 Freeway west of Soto Street
- I-10 Freeway west of the I-710 Freeway
- I-10 Freeway west of New Avenue
- I-10 Freeway west of Rosemead Boulevard
- I-10 Freeway east of Baldwin Avenue
- I-10 Freeway west of Durfee Avenue
- I-10 Freeway east of the I-605 Freeway
- I-710 Freeway south of the I-10 Freeway
- I-605 Freeway north of the I-10 Freeway
- I-605 Freeway south of the I-10 Freeway

[13] *Guide for the Preparation of Traffic Impact Studies*, State of California Department of Transportation, December 2002.

The proposed Flair Spectrum Specific Plan's effect on the regional mainline freeway system has been determined based on a review of available traffic volume data for existing weekday and weekend peak hour conditions. A comprehensive review was undertaken of traffic volume data published in the *Traffic Volumes on the California State Highway System*[14],[15], the Caltrans' Traffic Data Branch – California Freeway Performance Measurement System (PeMS), and in the *2010 Congestion Management Program*. The traffic volumes were increased by the CMP annual average growth rate of 0.82% per year to reflect year 2014 existing conditions. The year 2014 existing traffic volumes were then increased by the CMP annual average growth rate of 0.82% per year so as to reflect the future year 2016 and future year 2019 analysis conditions. The year 2014 existing traffic volumes were increased by the CMP annual average growth rate of 0.82% per year so as to reflect the future year 2035 analysis conditions. Additionally, traffic volumes expected to be generated by the related projects were also distributed and assigned to the respective future analysis conditions.

The selected freeway segment lane configurations used in the analysis are based on information obtained from field reviews. The freeway analysis is based on the number of mainline freeway lanes only. Along some freeway segments, auxiliary lanes are provided to facilitate entering and exiting freeway traffic to and from the freeway mainline. Although some of the freeway auxiliary lanes accommodate through traffic, these have not been considered so as to provide a conservative analysis to determine the effects of the proposed project. It should be noted that although two High Occupancy Toll (HOT) lanes are currently provided in each direction of the I-10 Freeway near the project site, none of the HOT lanes have been considered so as to provide a conservative analysis of freeway impacts due to the proposed project. The HCM operational analysis for freeway segments is based on density (i.e., passenger cars per mile per lane [pc/mi/ln]). The Caltrans freeway traffic analysis is summarized in ***Table 14-1*** for all traffic analysis conditions. Copies of the HCM freeway analysis data worksheets are provided in the ***Appendix D***.

It is recognized that improvements to the mainline freeway system are large, complex, regional transportation projects that are multi-jurisdictional in nature and thus, are considered to be beyond the responsibility of any single development project/applicant. Caltrans recognizes that when a project's effect on the regional mainline freeway system is noted an equitable share responsibility contribution is appropriate. With acknowledgment of the agreement between the City of El Monte and Caltrans, whereby the City of El Monte has committed future financial contributions to be made by individual development project applicants for effects on the State highway system, it is recommended that further negotiations with Caltrans and City of El Monte representatives occur so as to define more specifically the appropriate contribution.

[14], *2012 Traffic Volumes on the California State Highway System*, State of California Business, Transportation and Housing Agency, Department of Transportation Division of Traffic Operations, 2012.
[15] *2013 Traffic Volumes on the California State Highway System*, State of California Business, Transportation and Housing Agency, Department of Transportation Division of Traffic Operations, 2013.

Table 14-1
CALTRANS FREEWAY IMPACT ANALYSIS [1]
WEEKDAY AM, PM AND SATURDAY MID-DAY PEAK HOURS

Freeway Segment	Peak Hour	Dir	Existing Traffic Volumes [2]	Existing Density (pc/mi/ln) [3]	Existing LOS [4]	Project Trip Ends [5]	Existing With Project Buildout Traffic Volumes [6]	Existing With Project Buildout Density (pc/mi/ln) [3]	Existing With Project Buildout LOS [4]	Density Increase With Project [7]	Fair Share Contribution [8]	Year 2016 Future Pre-Project With AG & Rel. Projects Traffic Volumes [9]	Year 2016 Future Pre-Project With AG & Rel. Projects Density (pc/mi/ln) [3]	Year 2016 Future Pre-Project With AG & Rel. Projects LOS [4]	Project Trip Ends [5]	Year 2016 With Phase 1 Project Traffic Volumes [10]	Year 2016 With Phase 1 Project Density (pc/mi/ln) [3]	Year 2016 With Phase 1 Project LOS [4]	Density Increase With Project [11]	Fair Share Contribution [8]	Year 2019 Future Pre-Project With AG & Rel. Projects Traffic Volumes [12]	Year 2019 Future Pre-Project With AG & Rel. Projects Density (pc/mi/ln) [3]	Year 2019 Future Pre-Project With AG & Rel. Projects LOS [4]	Project Trip Ends [5]	Year 2019 With Project Buildout Traffic Volumes [13]	Year 2019 With Project Buildout Density (pc/mi/ln) [3]	Year 2019 With Project Buildout LOS [4]	Density Increase With Project [14]	Fair Share Contribution [8]	Year 2035 Future Pre-Project With AG & Rel. Projects Traffic Volumes [15]	Year 2035 Future Pre-Project With AG & Rel. Projects Density (pc/mi/ln) [3]	Year 2035 Future Pre-Project With AG & Rel. Projects LOS [4]	Project Trip Ends [5]	Year 2035 With Project Buildout Traffic Volumes [16]	Year 2035 With Project Buildout Density (pc/mi/ln) [3]	Year 2035 With Project Buildout LOS [4]	Density Increase With Project [17]	Fair Share Contribution [8]
I-10 Freeway																																						
West of Soto Street	AM	EB	5,590	23.5	C	21	5,611	23.6	C	0.1	NO	5,815	24.6	C	19	5,834	24.7	C	0.1	NO	5,952	25.2	C	21	5,973	25.3	C	0.1	NO	6,686	29.2	D	21	6,707	29.3	D	0.1	NO
		WB	9,167	52.2	F	19	9,186	52.5	F	0.3	NO	9,385	55.6	F	12	9,397	55.9	F	0.3	NO	9,611	59.7	F	19	9,630	60.0	F	0.3	NO	10,814	95.0	F	19	10,833	95.9	F	0.9	NO
	PM	EB	8,421	42.8	E	29	8,450	43.1	E	0.3	NO	8,646	45.3	F	22	8,668	45.6	F	0.3	NO	8,853	47.8	F	29	8,882	48.2	F	0.4	NO	9,958	67.1	F	29	9,987	67.8	F	0.7	NO
		WB	5,553	23.4	C	27	5,580	23.5	C	0.1	NO	5,794	24.5	C	23	5,817	24.6	C	0.1	NO	5,931	25.1	C	27	5,958	25.3	C	0.2	NO	6,659	29.0	D	27	6,686	29.2	D	0.2	NO
	SAT	EB	6,907	30.5	D	39	6,946	30.8	D	0.3	NO	7,170	32.2	D	34	7,204	32.5	D	0.3	NO	7,340	33.4	D	39	7,379	33.7	D	0.3	NO	8,246	41.0	E	39	8,285	41.4	E	0.4	NO
		WB	7,837	37.3	E	37	7,874	37.6	E	0.3	NO	8,031	39.0	E	33	8,064	39.3	E	0.3	NO	8,224	40.8	E	37	8,261	41.2	E	0.4	NO	9,252	53.5	F	37	9,289	54.1	F	0.6	NO
West of I-710 Freeway	AM	EB	5,809	23.2	C	29	5,838	23.3	C	0.1	NO	6,037	24.3	C	27	6,064	24.4	C	0.1	NO	6,180	25.0	C	29	6,209	25.2	C	0.2	NO	6,942	29.4	D	29	6,971	29.5	D	0.1	NO
		WB	9,526	54.8	F	22	9,548	55.2	F	0.4	NO	9,750	58.6	F	15	9,765	58.9	F	0.3	NO	9,985	63.1	F	22	10,007	63.6	F	0.5	NO	11,234	102.8	F	22	11,256	103.9	F	1.1	NO
	PM	EB	8,982	47.2	F	44	9,026	47.7	F	0.5	NO	9,216	50.2	F	37	9,253	50.7	F	0.5	NO	9,437	53.5	F	44	9,481	54.1	F	0.6	NO	10,616	78.8	F	44	10,660	80.2	F	1.4	NO
		WB	5,923	23.7	C	42	5,965	23.9	C	0.2	NO	6,170	25.0	C	38	6,208	25.2	C	0.2	NO	6,316	25.8	C	42	6,358	26.0	C	0.2	NO	7,093	30.3	D	42	7,135	30.6	D	0.3	NO
	SAT	EB	8,598	42.8	E	68	8,666	43.5	E	0.7	YES	8,889	46.0	F	63	8,952	46.8	F	0.8	YES	9,101	48.7	F	68	9,169	49.6	F	0.9	YES	10,229	68.4	F	68	10,297	70.1	F	1.7	YES
		WB	8,045	37.4	E	64	8,109	38.0	E	0.6	YES	8,243	39.2	E	60	8,303	39.8	E	0.6	YES	8,441	41.1	E	64	8,505	41.8	E	0.7	YES	9,497	54.4	F	64	9,561	55.4	F	1.0	YES
West of New Avenue	AM	EB	6,586	27.2	D	108	6,694	27.9	D	0.7	YES	6,977	29.6	D	100	7,077	30.2	D	0.6	YES	7,139	30.6	D	108	7,247	31.4	D	0.8	YES	8,003	37.1	E	108	8,111	38.0	E	0.9	YES
		WB	7,126	31.9	D	90	7,216	32.5	D	0.6	YES	7,376	33.7	D	51	7,427	34.1	D	0.4	YES	7,551	35.0	D	90	7,641	35.7	E	0.7	YES	8,486	43.5	E	90	8,576	44.5	E	1.0	YES
	PM	EB	7,235	31.3	D	198	7,433	32.6	D	1.3	YES	7,523	33.3	D	161	7,684	34.5	D	1.2	YES	7,701	34.6	D	198	7,899	36.2	E	1.6	YES	8,650	43.3	E	198	8,848	45.5	F	2.2	YES
		WB	6,344	27.2	D	177	6,521	28.2	D	1.0	YES	6,766	29.6	D	159	6,925	30.6	D	1.0	YES	6,922	30.6	D	177	7,099	31.8	D	1.2	YES	7,754	36.6	E	177	7,931	38.1	E	1.5	YES
	SAT	EB	7,218	31.2	D	312	7,530	33.3	D	2.1	YES	7,655	34.3	D	285	7,940	36.5	E	2.2	YES	7,832	35.7	E	312	8,144	38.3	E	2.6	YES	8,779	44.7	E	312	9,091	48.5	F	3.8	YES
		WB	6,900	30.5	D	288	7,188	32.3	D	1.8	YES	7,153	32.1	D	265	7,418	34.0	D	1.9	YES	7,323	33.3	D	288	7,611	35.4	E	2.1	YES	8,228	40.8	E	288	8,516	43.9	E	3.1	YES
West of Rosemead Boulevard (SR-164)	AM	EB	6,706	29.3	D	134	6,840	30.1	D	0.8	YES	7,115	31.9	D	123	7,238	32.7	D	0.8	YES	7,280	33.0	D	134	7,414	33.9	D	0.9	YES	8,160	40.2	E	134	8,294	41.5	E	1.3	YES
		WB	7,256	32.8	D	116	7,372	33.7	D	0.9	YES	7,508	34.7	D	60	7,568	35.1	E	0.4	YES	7,686	36.0	E	116	7,802	37.0	E	1.0	YES	8,638	45.2	F	116	8,754	46.6	F	1.4	YES
	PM	EB	7,367	33.6	D	259	7,626	35.6	E	2.0	YES	7,664	35.9	E	206	7,870	37.5	E	1.6	YES	7,845	37.4	E	259	8,104	39.6	E	2.2	YES	8,812	47.3	F	259	9,071	50.8	F	3.5	YES
		WB	6,460	27.9	D	229	6,689	29.2	D	1.3	YES	6,904	30.5	D	203	7,107	31.8	D	1.3	YES	7,063	31.5	D	229	7,292	33.1	D	1.6	YES	7,910	37.9	E	229	8,139	40.0	E	2.1	YES
	SAT	EB	7,009	31.2	D	410	7,419	34.0	D	2.8	YES	7,474	34.4	D	371	7,845	37.4	E	3.0	YES	7,646	35.7	E	410	8,056	39.2	E	3.5	YES	8,566	44.4	E	410	8,976	49.5	F	5.1	YES
		WB	6,160	26.3	D	377	6,537	28.3	D	2.0	YES	6,401	27.6	D	344	6,745	29.5	D	1.9	YES	6,553	28.4	D	377	6,930	30.7	D	2.3	YES	7,361	33.6	D	377	7,738	36.4	E	2.8	YES
East of Baldwin Avenue	AM	EB	4,049	15.8	B	121	4,170	16.2	B	0.4	NO	4,202	16.4	B	110	4,312	16.8	B	0.4	NO	4,302	16.8	B	121	4,423	17.2	B	0.4	NO	4,833	18.9	C	121	4,954	19.4	C	0.5	NO
		WB	8,155	40.1	E	111	8,266	41.2	E	1.1	YES	8,547	44.2	E	55	8,602	44.8	E	0.6	YES	8,747	46.5	F	111	8,858	47.9	F	1.4	YES	9,817	63.8	F	111	9,928	66.3	F	2.5	YES
	PM	EB	7,474	32.9	D	234	7,708	34.7	D	1.8	YES	7,875	36.0	E	181	8,056	37.5	E	1.5	YES	8,058	37.6	E	234	8,292	39.7	E	2.1	YES	9,039	47.9	F	234	9,273	51.0	F	3.1	YES
		WB	5,542	23.3	C	205	5,747	24.3	C	1.0	NO	5,766	24.3	C	179	5,945	25.2	C	0.9	NO	5,902	25.0	C	205	6,107	26.0	C	1.0	NO	6,629	28.8	D	205	6,834	30.1	D	1.3	YES
	SAT	EB	9,347	52.1	F	362	9,709	57.9	F	5.8	YES	9,623	56.4	F	323	9,946	62.3	F	5.9	YES	9,853	60.5	F	362	10,215	68.2	F	7.7	YES	11,080	95.6	F	362	11,442	114.3	F	18.7	YES
		WB	4,768	20.0	C	333	5,101	21.4	C	1.4	NO	5,109	21.4	C	300	5,409	22.7	C	1.3	NO	5,226	21.9	C	333	5,559	23.4	C	1.5	NO	5,851	24.7	C	333	6,184	26.4	D	1.7	YES
West of Durfee Avenue	AM	EB	3,820	14.9	B	86	3,906	15.2	B	0.3	NO	3,994	15.6	B	79	4,073	15.9	B	0.3	NO	4,088	15.9	B	86	4,174	16.3	B	0.4	NO	4,589	17.9	B	86	4,675	18.2	C	0.3	NO
		WB	7,693	36.1	E	75	7,768	36.7	E	0.6	YES	8,042	39.1	E	42	8,084	39.5	E	0.4	NO	8,231	40.9	E	75	8,306	41.6	E	0.7	YES	9,241	53.3	F	75	9,316	54.5	F	1.2	YES
	PM	EB	7,051	30.1	D	152	7,203	31.1	D	1.0	YES	7,421	32.6	D	120	7,541	33.4	D	0.8	YES	7,594	33.8	D	152	7,746	35.0	D	1.2	YES	8,519	41.9	E	152	8,671	43.5	E	1.6	YES
		WB	5,229	21.9	C	135	5,364	22.5	C	0.6	NO	5,460	22.9	C	119	5,579	23.5	C	0.6	NO	5,588	23.5	C	135	5,723	24.1	C	0.6	NO	6,274	26.9	D	135	6,409	27.6	D	0.7	YES
	SAT	EB	4,579	17.8	B	231	4,810	18.8	C	1.0	NO	4,783	18.7	C	208	4,991	19.5	C	0.8	NO	4,895	19.1	C	231	5,126	20.1	C	1.0	NO	5,496	21.7	C	231	5,727	22.8	C	1.1	NO
		WB	6,928	30.7	D	215	7,143	32.0	D	1.3	YES	7,296	33.1	D	195	7,491	34.5	D	1.4	YES	7,466	34.3	D	215	7,681	36.0	E	1.7	YES	8,375	42.3	E	215	8,590	44.7	E	2.4	YES
East of I-605 Freeway	AM	EB	4,393	17.1	B	28	4,421	17.2	B	0.1	NO	4,503	17.5	B	26	4,529	17.6	B	0.1	NO	4,611	18.0	B	28	4,639	18.1	C	0.1	NO	5,187	20.4	C	28	5,215	20.5	C	0.1	NO
		WB	8,847	47.8	F	24	8,871	48.1	F	0.3	NO	9,074	50.9	F	15	9,089	51.1	F	0.2	NO	9,292	54.1	F	24	9,316	54.5	F	0.4	NO	10,452	80.9	F	24	10,476	81.7	F	0.8	NO
	PM	EB	8,109	38.0	E	46	8,155	38.4	E	0.4	NO	8,332	40.1	E	37	8,369	40.4	E	0.3	NO	8,531	42.1	E	46	8,577	42.5	E	0.4	NO	9,595	56.0	F	46	9,641	56.7	F	0.7	NO
		WB	6,013	25.5	C	41	6,054	25.7	C	0.2	NO	6,160	26.3	D	37	6,197	26.5	D	0.2	NO	6,308	27.1	D	41	6,349	27.3	D	0.2	NO	7,096	31.7	D	41	7,137	32.0	D	0.3	NO
	SAT	EB	5,140	20.1	C	69	5,209	20.4	C	0.3	NO	5,263	20.7	C	63	5,326	21.0	C	0.3	NO	5,389	21.2	C	69	5,458	21.6	C	0.4	NO	6,063	24.4	C	69	6,132	24.8	C	0.4	NO
		WB	7,203	32.5	D	65	7,268	32.9	D	0.4	YES	7,411	33.9	D	59	7,470	34.4	D	0.5	YES	7,589	35.3	E	65	7,654	35.8	E	0.5	YES	8,534	44.0	E	65	8,599	44.8	E	0.8	YES

[1] Freeway analysis based on the Highway Capacity Manual 2010, operational analysis methodologies, per the Caltrans' *Guide for the Preparation of Traffic Impact Studies* , December 2002.
[2] Source: "2012 and 2013 Traffic Volumes on California State Highways", Caltrans. The existing volumes were increased by an annual growth rate of 0.82% per year to reflect year 2014 existing conditions.
[3] pc/mi/ln: passenger cars per mile per lane.
[4] Freeway mainline Levels of Service were based on the following criteria:

Density (pc/mi/ln)	LOS	Density (pc/mi/ln)	LOS
<= 11	A	> 26-35	D
> 11-18	B	> 35-45	E
> 18-26	C	> 45	F

[5] Based on the project trip generation and trip distribution for the project.
[6] Derived by combining the existing traffic volumes and the proposed project volumes.
[7] Derived by subtracting the density of the existing with project conditions with the existing conditions pursuant to the Highway Capacity Software (HCS) worksheets which report density results to one decimal place.
[8] Based on coordination with Caltrans, a preliminary determination with respect to fair share contribution has been made.
[9] Derived by combining the existing traffic volumes increased by an ambient growth rate of 0.82% per year to the year 2016, plus related project volumes.
[10] Derived by combining the year 2016 without project traffic volumes and the proposed project volumes.
[11] Derived by subtracting the density of the year 2016 with project conditions with the year 2016 without project conditions pursuant to the Highway Capacity Software (HCS) worksheets which report density results to one decimal place.
[12] Derived by combining the existing traffic volumes increased by an ambient growth rate of 0.82% per year to the year 2019, plus related project volumes.
[13] Derived by combining the year 2019 without project traffic volumes and the proposed project volumes.
[14] Derived by subtracting the density of the year 2019 with project conditions with the year 2019 without project conditions pursuant to the Highway Capacity Software (HCS) worksheets which report density results to one decimal place.
[15] Derived by combining the existing traffic volumes increased by an ambient growth rate of 0.82% per year to the year 2035, plus related project volumes.
[16] Derived by combining the year 2035 without project traffic volumes and the proposed project volumes.
[17] Derived by subtracting the density of the year 2035 with project conditions with the year 2035 without project conditions pursuant to the Highway Capacity Software (HCS) worksheets which report density results to one decimal place.

Table 14-1(Continued)
CALTRANS FREEWAY IMPACT ANALYSIS [1]
WEEKDAY AM, PM AND SATURDAY MID-DAY PEAK HOURS

Freeway Segment	Peak Hour	Dir	Existing Traffic Volumes [2]	Existing Density (pc/mi/ln) [3]	Existing LOS [4]	Project Trip Ends [5]	Existing With Project Buildout Traffic Volumes [6]	Existing With Project Buildout Density (pc/mi/ln) [3]	Existing With Project Buildout LOS [4]	Density Increase With Project [7]	Fair Share Contribution [8]	Year 2016 Future Pre-Project With AG & Rel. Projects Traffic Volumes [9]	Year 2016 Future Pre-Project With AG & Rel. Projects Density (pc/mi/ln) [3]	Year 2016 Future Pre-Project With AG & Rel. Projects LOS [4]	Project Trip Ends [5]	Year 2016 With Phase 1 Project Traffic Volumes [10]	Year 2016 With Phase 1 Project Density (pc/mi/ln) [3]	Year 2016 With Phase 1 Project LOS [4]	Density Increase With Project [11]	Fair Share Contribution [8]	Year 2019 Future Pre-Project With AG & Rel. Projects Traffic Volumes [12]	Year 2019 Future Pre-Project With AG & Rel. Projects Density (pc/mi/ln) [3]	Year 2019 Future Pre-Project With AG & Rel. Projects LOS [4]	Project Trip Ends [5]	Year 2019 With Project Buildout Traffic Volumes [13]	Year 2019 With Project Buildout Density (pc/mi/ln) [3]	Year 2019 With Project Buildout LOS [4]	Density Increase With Project [14]	Fair Share Contribution [8]	Year 2035 Future Pre-Project With AG & Rel. Projects Traffic Volumes [15]	Year 2035 Future Pre-Project With AG & Rel. Projects Density (pc/mi/ln) [3]	Year 2035 Future Pre-Project With AG & Rel. Projects LOS [4]	Project Trip Ends [5]	Year 2035 With Project Buildout Traffic Volumes [16]	Year 2035 With Project Buildout Density (pc/mi/ln) [3]	Year 2035 With Project Buildout LOS [4]	Density Increase With Project [17]	Fair Share Contribution [8]
I-710 Freeway																																						
South of I-10 Freeway	AM	NB	4,613	24.9	C	35	4,648	25.1	C	0.2	NO	4,827	26.4	D	33	4,860	26.6	D	0.2	NO	4,940	27.3	D	35	4,975	27.5	D	0.2	NO	5,545	32.3	D	35	5,580	32.7	D	0.4	NO
		SB	5,584	32.7	D	25	5,609	33.0	D	0.3	NO	5,729	34.1	D	18	5,747	34.3	D	0.2	NO	5,866	35.6	E	25	5,891	35.8	E	0.2	NO	6,599	45.0	E	25	6,624	45.4	F	0.4	NO
	PM	NB	5,250	29.7	D	55	5,305	30.2	D	0.5	YES	5,399	31.0	D	48	5,447	31.5	D	0.5	NO	5,528	32.2	D	55	5,583	32.7	D	0.5	YES	6,217	39.7	E	55	6,272	40.4	E	0.7	YES
		SB	4,587	24.7	C	53	4,640	25.1	C	0.4	NO	4,811	26.3	D	49	4,860	26.6	D	0.3	NO	4,924	27.1	D	53	4,977	27.5	D	0.4	YES	5,526	32.2	D	53	5,579	32.7	D	0.5	YES
	SAT	NB	4,106	21.6	C	88	4,194	22.2	C	0.6	NO	4,322	23.0	C	83	4,405	23.5	C	0.5	NO	4,423	23.6	C	88	4,511	24.2	C	0.6	NO	4,962	27.4	D	88	5,050	28.1	D	0.7	YES
		SB	3,613	18.8	C	82	3,695	19.3	C	0.5	NO	3,714	19.4	C	78	3,792	19.8	C	0.4	NO	3,803	19.9	C	82	3,885	20.3	C	0.4	NO	4,277	22.7	C	82	4,359	23.2	C	0.5	NO
I-605 Freeway																																						
North of I-10 Freeway	AM	NB	5,400	21.3	C	34	5,434	21.4	C	0.1	NO	5,517	21.8	C	31	5,548	22.0	C	0.2	NO	5,649	22.4	C	34	5,683	22.6	C	0.2	NO	6,358	26.0	C	34	6,392	26.2	D	0.2	NO
		SB	7,515	33.2	D	30	7,545	33.5	D	0.3	NO	7,685	34.5	D	15	7,700	34.6	D	0.1	NO	7,870	36.0	E	30	7,900	36.2	E	0.2	NO	8,856	45.6	F	30	8,886	46.0	F	0.4	NO
	PM	NB	5,727	22.8	C	63	5,790	23.1	C	0.3	NO	5,876	23.5	C	49	5,925	23.7	C	0.2	NO	6,017	24.2	C	63	6,080	24.5	C	0.3	NO	6,768	28.3	D	63	6,831	28.7	D	0.4	YES
		SB	6,726	28.1	D	56	6,782	28.4	D	0.3	YES	6,870	28.9	D	49	6,919	29.2	D	0.3	NO	7,036	30.0	D	56	7,092	30.3	D	0.3	YES	7,918	36.4	E	56	7,974	36.9	E	0.5	YES
	SAT	NB	5,908	23.7	C	98	6,006	24.1	C	0.4	NO	6,033	24.3	C	88	6,121	24.7	C	0.4	NO	6,178	25.0	C	98	6,276	25.5	C	0.5	NO	6,954	29.4	D	98	7,052	30.1	D	0.7	YES
		SB	7,155	30.7	D	90	7,245	31.3	D	0.6	YES	7,325	31.9	D	81	7,406	32.4	D	0.5	YES	7,501	33.1	D	90	7,591	33.8	D	0.7	YES	8,440	41.1	E	90	8,530	42.0	E	0.9	YES
South of I-10 Freeway	AM	NB	6,314	25.7	C	25	6,339	25.9	C	0.2	NO	6,497	26.7	D	23	6,520	26.9	D	0.2	NO	6,652	27.6	D	25	6,677	27.8	D	0.2	NO	7,480	33.0	D	25	7,505	33.2	D	0.2	NO
		SB	8,788	44.9	E	21	8,809	45.1	F	0.2	NO	8,970	47.0	F	12	8,982	47.2	F	0.2	NO	9,186	49.8	F	21	9,207	50.1	F	0.3	NO	10,339	71.1	F	21	10,360	71.7	F	0.6	NO
	PM	NB	6,698	27.9	D	43	6,741	28.2	D	0.3	NO	6,853	28.8	D	34	6,887	29.0	D	0.2	NO	7,018	29.8	D	43	7,061	30.1	D	0.3	NO	7,896	36.2	E	43	7,939	36.5	E	0.3	NO
		SB	7,866	35.9	E	38	7,904	36.3	E	0.4	NO	8,081	37.8	E	34	8,115	38.1	E	0.3	NO	8,275	39.5	E	38	8,313	39.9	E	0.4	NO	9,307	51.5	F	38	9,345	52.1	F	0.6	NO
	SAT	NB	6,584	27.2	D	65	6,649	27.6	D	0.4	YES	6,777	28.4	D	59	6,836	28.7	D	0.3	YES	6,939	29.4	D	65	7,004	29.8	D	0.4	YES	7,803	35.4	E	65	7,868	36.0	E	0.6	YES
		SB	7,977	36.9	E	61	8,038	37.4	E	0.5	YES	8,141	38.3	E	55	8,196	38.8	E	0.5	YES	8,337	40.1	E	61	8,398	40.7	E	0.6	YES	9,383	52.6	F	61	9,444	53.5	F	0.9	YES

[1] Freeway analysis based on the Highway Capacity Manual 2010, operational analysis methodologies, per the Caltrans' *Guide for the Preparation of Traffic Impact Studies*, December 2002.
[2] Source: "2012 and 2013 Traffic Volumes on California State Highways", Caltrans. The existing volumes were increased by an annual growth rate of 0.82% per year to reflect year 2014 existing conditions.
[3] pc/mi/ln: passenger cars per mile per lane.
[4] Freeway mainline Levels of Service were based on the following criteria:

Density (pc/mi/ln)	LOS	Density (pc/mi/ln)	LOS
<= 11	A	> 26-35	D
> 11-18	B	> 35-45	E
> 18-26	C	> 45	F

[5] Based on the project trip generation and trip distribution for the project.
[6] Derived by combining the existing traffic volumes and the proposed project volumes.
[7] Derived by subtracting the density of the existing with project conditions with the existing conditions pursuant to the Highway Capacity Software (HCS) worksheets which report density results to one decimal place.
[8] Based on coordination with Caltrans, a preliminary determination with respect to fair share contribution has been made.
[9] Derived by combining the existing traffic volumes increased by an ambient growth rate of 0.82% per year to the year 2016, plus related project volumes.
[10] Derived by combining the year 2016 without project traffic volumes and the proposed project volumes.
[11] Derived by subtracting the density of the year 2016 with project conditions with the year 2016 without project conditions pursuant to the Highway Capacity Software (HCS) worksheets which report density results to one decimal place.
[12] Derived by combining the existing traffic volumes increased by an ambient growth rate of 0.82% per year to the year 2019, plus related project volumes.
[13] Derived by combining the year 2019 without project traffic volumes and the proposed project volumes.
[14] Derived by subtracting the density of the year 2019 with project conditions with the year 2019 without project conditions pursuant to the Highway Capacity Software (HCS) worksheets which report density results to one decimal place.
[15] Derived by combining the existing traffic volumes increased by an ambient growth rate of 0.82% per year to the year 2035, plus related project volumes.
[16] Derived by combining the year 2035 without project traffic volumes and the proposed project volumes.
[17] Derived by subtracting the density of the year 2035 with project conditions with the year 2035 without project conditions pursuant to the Highway Capacity Software (HCS) worksheets which report density results to one decimal place.

14.2 Intersection Analysis

Supplemental intersection analyses were also prepared for the State facility intersections within the project study area pursuant to the California Department of Transportation's (Caltrans) *Guide for the Preparation of Traffic Impact Studies*. Intersection analyses was prepared utilizing the *Synchro 8* software package which implements the Highway Capacity Manual operational methods. A *Synchro* network was created based on current traffic signal timing charts and field review of existing conditions at these intersections. In addition, specifics such as lane configurations, lane widths, storage lengths, crosswalk locations, posted speed limits, traffic signal phasing and cycle length, traffic volumes, etc., were coded to complete the existing network.

The following 11 intersections have been identified for analysis based on their proximity to the project site:

- Intersection No. 4: Rosemead Boulevard/Valley Boulevard
- Intersection No. 5: Rosemead Boulevard/Glendon Way-I-10 Westbound Ramps
- Intersection No. 6: Rosemead Boulevard/I-10 Eastbound Ramps
- Intersection No. 7: Rosemead Boulevard/Telstar Avenue
- Intersection No. 8: Rosemead Boulevard/Whitmore Street
- Intersection No. 9: Rosemead Boulevard/Garvey Avenue
- Intersection No. 10: Aerojet Avenue/Flair Drive-I-10 Eastbound Ramps
- Intersection No. 21: Temple City Boulevard/I-10 Westbound Ramps
- Intersection No. 24: Baldwin Avenue/Flair Drive-I-10 Eastbound Ramps
- Intersection No. 42: Rosemead Boulevard/Lower Azusa Road
- Intersection No. 43: Rosemead Boulevard/Rush Street

Table 14-2 summarizes the intersection analyses for the "Existing With Project Build-out", "Year 2016 With Phase I Project", "Year 2019 Project Build-out", and "Year 2035 With Project Build-out" conditions. The corresponding weekday AM, PM and Saturday mid-day peak hour HCM worksheets are contained in ***Appendix E***.

As shown in *Table 14-2,* application of the Caltrans LOS standards and guidelines to the "Year 2016 With Phase I Project" scenario indicates that the proposed project could be expected to result in impacts at up to six (6) of 11 Caltrans intersection locations. For the "Year 2019 With Project

Table 14-2
CALTRANS INTERSECTION IMPACT ANALYSIS [a]
WEEKDAY AM, PM AND SATURDAY MID-DAY PEAK HOURS

NO.	INTERSECTION	TRAFFIC CONTROL	PEAK HOUR	[1] YEAR 2014 EXISTING DELAY [b]	LOS [c]	[2] YEAR 2014 EXISTING WITH PROJECT BUILDOUT DELAY [b]	LOS [c]	CHANGE IN DELAY [(2)-(1)]	IMPACT	[3] YEAR 2016 FUTURE PRE-PROJECT W/ AG & REL. PROJECTS DELAY [b]	LOS [c]	[4] YEAR 2016 FUTURE WITH PHASE I PROJECT DELAY [b]	LOS [c]	CHANGE IN DELAY [(4)-(3)]	IMPACT	[5] YEAR 2019 FUTURE PRE-PROJECT W/ AG & REL. PROJECTS DELAY [b]	LOS [c]	[6] YEAR 2019 FUTURE WITH WITH PROJECT BUILDOUT DELAY [b]	LOS [c]	CHANGE IN DELAY [(6)-(5)]	IMPACT	[7] YEAR 2035 FUTURE PRE-PROJECT W/ AG & REL. PROJECTS DELAY [b]	LOS [c]	[8] YEAR 2035 FUTURE WITH WITH PROJECT BUILDOUT DELAY [b]	LOS [c]	CHANGE IN DELAY [(8)-(7)]	IMPACT
4	Rosemead Boulevard (SR-164)/ Valley Boulevard	Signalized	AM	47.4	D	48.8	D	1.4	Yes	56.8	E	58.1	E	1.3	Yes	60.5	E	63.0	E	2.5	Yes	74.0	E	77.4	E	3.4	Yes
			PM	45.9	D	48.3	D	2.4	Yes	55.2	E	58.3	E	3.1	Yes	58.1	E	62.3	E	4.2	Yes	69.7	E	74.4	E	4.7	Yes
			SAT	47.7	D	52.9	D	5.2	Yes	57.1	E	62.0	E	4.9	Yes	59.8	E	66.1	E	6.3	Yes	69.8	E	79.8	E	10.0	Yes
5	Rosemead Boulevard (SR-164)/ Glendon Way/I-10 WB Ramps	Signalized	AM	20.0	B	20.3	C	0.3	No	21.2	C	21.6	C	0.4	No	22.0	C	22.6	C	0.6	No	25.4	C	26.5	C	1.1	No
			PM	27.1	C	33.8	C	6.7	No	29.4	C	37.1	D	7.7	Yes	31.6	C	42.0	D	10.4	Yes	39.5	D	54.7	D	15.2	Yes
			SAT	28.7	C	31.4	C	2.7	No	29.6	C	32.6	C	3.0	No	31.4	C	35.7	D	4.3	Yes	37.1	D	43.9	D	6.8	Yes
6	Rosemead Boulevard (SR-164)/ I-10 EB Ramps	Yield Only	AM	[d]		[d]		[d]		[d]		[d]		[d]		[d]		[d]		[d]		[d]		[d]		[d]	
			PM	[d]		[d]		[d]		[d]		[d]		[d]		[d]		[d]		[d]		[d]		[d]		[d]	
			SAT	[d]		[d]		[d]		[d]		[d]		[d]		[d]		[d]		[d]		[d]		[d]		[d]	
7	Rosemead Boulevard (SR-164)/ Telstar Avenue	Signalized	AM	35.2	D	67.6	E	32.4	Yes	32.4	C	56.6	E	24.2	Yes	33.9	C	64.2	E	30.3	Yes	38.5	D	69.7	E	31.2	Yes
			PM	50.1	D	>80.0	F	NA	Yes	29.2	C	65.0	E	35.8	Yes	30.4	C	>80.0	F	NA	Yes	34.7	C	>80.0	F	NA	Yes
			SAT	17.1	B	>80.0	F	NA	Yes	10.8	B	63.9	E	53.1	Yes	11.2	B	76.1	E	64.9	Yes	11.7	B	77.3	E	65.6	Yes
8	Rosemead Boulevard (SR-164)/ Whitmore Street	Signalized	AM	8.2	A	8.3	A	0.1	No	10.5	B	10.6	B	0.1	No	10.7	B	10.8	B	0.1	No	11.5	B	11.6	B	0.1	No
			PM	14.8	B	14.9	B	0.1	No	23.1	C	23.1	C	0.0	No	24.1	C	24.1	C	0.0	No	26.8	C	26.8	C	0.0	No
			SAT	6.0	A	6.2	A	0.2	No	6.8	A	7.0	A	0.2	No	7.0	A	7.3	A	0.3	No	7.4	A	7.7	A	0.3	No
9	Rosemead Boulevard (SR-164)/ Garvey Avenue	Signalized	AM	62.5	E	65.5	E	3.0	Yes	74.1	E	76.3	E	2.2	Yes	>80.0	F	>80.0	F	NA	Yes	>80.0	F	>80.0	F	NA	Yes
			PM	72.6	E	>80.0	F	NA	Yes	>80.0	F	>80.0	F	NA	Yes	>80.0	F	>80.0	F	NA	Yes	>80.0	F	>80.0	F	NA	Yes
			SAT	74.9	E	>80.0	F	NA	Yes	>80.0	F	>80.0	F	NA	Yes	>80.0	F	>80.0	F	NA	Yes	>80.0	F	>80.0	F	NA	Yes
10	Aerojet Avenue/ Flair Drive/I-10 EB Ramps	All-Way Stop	AM	41.9	E	42.9	E	1.0	Yes	42.3	E	43.4	E	1.1	Yes	42.5	E	43.4	E	0.9	No	43.1	E	44.0	E	0.9	No
			PM	14.5	B	37.1	E	22.6	Yes	15.1	C	36.1	E	21.0	Yes	15.9	C	49.8	E	33.9	Yes	19.1	C	>50.0	F	NA	Yes
			SAT	7.9	A	19.6	C	11.7	No	8.0	A	18.4	C	10.4	No	8.0	A	21.2	C	13.2	No	8.1	A	22.2	C	14.1	No
21	Temple City Boulevard/I-10 WB Ramps/ Olney Street	Two-Way Stop	AM	12.7	B	12.7	B	0.0	No	13.4	B	13.4	B	0.0	No	13.6	B	13.6	B	0.0	No	14.2	B	14.2	B	0.0	No
			PM	18.1	C	18.1	C	0.0	No	24.3	C	24.3	C	0.0	No	25.0	C	25.0	C	0.0	No	27.5	D	27.5	D	0.0	No
			SAT	15.5	C	15.5	C	0.0	No	16.9	C	16.9	C	0.0	No	17.3	C	17.3	C	0.0	No	18.5	C	18.5	C	0.0	No
24	Baldwin Avenue/ Flair Drive/I-10 EB Ramps	Two-Way Stop	AM	>50.0	F	>50.0	F	NA	Yes	>50.0	F	>50.0	F	NA	Yes	>50.0	F	>50.0	F	NA	Yes	>50.0	F	>50.0	F	NA	Yes
			PM	>50.0	F	>50.0	F	NA	Yes	>50.0	F	>50.0	F	NA	Yes	>50.0	F	>50.0	F	NA	Yes	>50.0	F	>50.0	F	NA	Yes
			SAT	>50.0	F	>50.0	F	NA	Yes	>50.0	F	>50.0	F	NA	Yes	>50.0	F	>50.0	F	NA	Yes	>50.0	F	>50.0	F	NA	Yes
42	Rosemead Boulevard (SR-164)/ Lower Azusa Road	Signalized	AM	31.0	C	31.0	C	0.0	No	33.9	C	33.9	C	0.0	No	36.3	D	36.3	D	0.0	No	43.6	D	43.6	D	0.0	No
			PM	28.9	C	29.3	C	0.4	No	35.8	D	36.4	D	0.6	No	38.1	D	38.8	D	0.7	No	48.1	D	48.6	D	0.5	No
			SAT	19.0	B	19.2	B	0.2	No	22.6	C	22.9	C	0.3	No	23.4	C	23.9	C	0.5	No	26.2	C	27.3	C	1.1	No
43	Rosemead Boulevard (SR-164)/ Rush Street	Signalized	AM	50.4	D	50.9	D	0.5	No	56.7	E	57.1	E	0.4	No	61.5	E	62.2	E	0.7	No	78.0	E	78.8	E	0.8	No
			PM	46.3	D	46.6	D	0.3	No	48.7	D	49.0	D	0.3	No	51.4	D	51.9	D	0.5	No	61.1	E	62.0	E	0.9	No
			SAT	33.9	C	34.1	C	0.2	No	34.6	C	34.8	C	0.2	No	34.9	C	35.1	D	0.2	No	38.0	D	38.3	D	0.3	No

[a] Intersection analysis based on the Highway Capacity Manual operational analysis methodologies, per the Caltrans' *Guide for the Preparation of Traffic Impact Studies* , December 2002.

[b] Reported control delay values in seconds per vehicle.

[c] Signalized Intersection Levels of Service are based on the following criteria:

Control Delay (s/veh)	LOS
<= 10	A
> 10-20	B
> 20-35	C
> 35-55	D
> 55-80	E
> 80	F

Unsignalized Intersection Levels of Service are based on the following criteria:

Control Delay (s/veh)	LOS
<= 10	A
> 10-15	B
> 15-25	C
> 25-35	D
> 35-50	E
> 50	F

[d] As none of the subject approaches are required to stop, no intersection delay values are computed pursuant to the HCM methodologies.

Build-Out" and the "Year 2035 With Project Build-Out" scenarios, the proposed project is expected to result in impacts at the same six (6) of 11 Caltrans intersection locations. The remaining five (5) Caltrans intersections are not expected to be impacted by either Phase I or Build-Out of the proposed project. For informational purposes, it was determined that the proposed project could result in traffic impacts at five (5) of the 11 Caltrans intersections for the "Existing With Project Build-out" scenario. Refer to Section 12.0, Transportation Mitigation Program, for a full discussion of measures previously proposed to address forecast impacts due to the development of the proposed project.

14.3 Ramp Vehicle Queuing Analysis

A detailed review was also undertaken with respect to vehicle queuing on the freeway off-ramp approaches at seven locations. The queuing analysis was calculated using the *Synchro 8* software package which implements the Highway Capacity Manual operational methods. In forecasting vehicle queuing, the *Synchro* software considers traffic volume data, lane configurations, traffic signal timing and phasing for signalized locations, and available vehicle storage lengths for the respective traffic movements. The queuing analysis was prepared for the Year 2035 cumulative with project build-out conditions. Each of the seven freeway off-ramp intersection approaches were reviewed in terms of expected maximum vehicle queues (i.e., 95th percentile queues) which represent the maximum back of vehicle queues with 95th percentile traffic volumes. The corresponding maximum vehicle queue lengths were then compared with the available ramp storage lengths (as measured from the applicable freeway/frontage road gore areas to the respective off-ramp approach limit lines/merge points).

As presented in ***Table 14-3***, four of the seven subject off-ramp locations currently operate either under free-flow or yield only operations at their respective ramp terminus. Thus, vehicle queuing back onto the freeway mainline travel lanes is not expected at these off-ramp locations and based on visual inspection was not observed. The I-10 Freeway Eastbound Off-Ramp at the Aerojet Avenue-Flair Drive intersection is currently controlled by all-way stop signs while the SR-60 Freeway Eastbound and Westbound Off-Ramps at Rosemead Boulevard are controlled by traffic signals. As shown in *Table 14-3*, adequate storage areas are provided to accommodate the forecast 95th percentile queues under the Year 2035 cumulative with project build-out conditions. Therefore, based on a review of the queuing analyses and the available storage lengths, vehicle queuing back onto the I-10 or SR-60 Freeway mainline travel lanes is not expected. The corresponding weekday AM peak hour, PM peak hour, and Saturday Mid-day peak hour HCM worksheets for purposes of determining the 95th percentile vehicle queues are contained in ***Appendix F***.

Table 14-3
SUMMARY OF POTENTIAL FREEWAY OFF-RAMP VEHICLE QUEUING [1]
WEEKDAY AM, PM AND SATURDAY MID-DAY PEAK HOURS

RAMP LOCATION	PEAK HOUR	AVAILABLE STORAGE [2] (FEET)	YEAR 2035 FUTURE WITH PROJECT CONDITIONS	
			95TH PERCENTILE QUEUE [3] (FEET)	ADEQUATE STORAGE YES/NO
I-10 Freeway Westbound Off-Ramp to Rosemead Boulevard SB (SR-164)	AM	550	[4]	YES
	PM	550	[4]	YES
	SAT	550	[4]	YES
I-10 Freeway Eastbound Off-Ramp to Rosemead Boulevard SB (SR-164)	AM	900	[5]	YES
	PM	900	[5]	YES
	SAT	900	[5]	YES
I-10 Freeway Eastbound Off-Ramp to Aerojet Avenue/Flair Drive	AM	550	390	YES
	PM	550	323	YES
	SAT	550	235	YES
I-10 Freeway Westbound Off-Ramp to Temple City Boulevard	AM	500	[4]	YES
	PM	500	[4]	YES
	SAT	500	[4]	YES
I-10 Freeway Eastbound Off-Ramp to Baldwin Avenue	AM	1,500	[4]	YES
	PM	1,500	[4]	YES
	SAT	1,500	[4]	YES
SR-60 Freeway Eastbound Off-Ramp to Rosemead Boulevard (SR-164)	AM	1,550	157	YES
	PM	1,550	109	YES
	SAT	1,550	105	YES
SR-60 Freeway Westbound Off-Ramp to Rosemead Boulevard (SR-164)	AM	1,650	58	YES
	PM	1,650	108	YES
	SAT	1,650	42	YES

[1] Intersection queuing analysis based on the Highway Capacity Manual (HCM) methodologies.
[2] Available storage based on aerial measurements from Caltrans Earth.
[3] The 95th percentile queue is the maximum back of queue with 95th percentile traffic volumes. An average vehicle length of 25 feet is utilized.
[4] As the subject off-ramp movement is under free-flow operation, no queue values are reported.
[5] As the subject off-ramp movement is under yield only operation, no queue values are reported.

15.0 CONSTRUCTION IMPACT ANALYSIS

Project construction would generate traffic from construction worker travel, as well as the arrival and departure of trucks delivering construction materials to the site and the removal of soil due to on-site excavation and export activities. Both the number of construction workers and trucks would vary throughout the construction process in order to maintain a reasonable schedule of completion.

15.1 Overview of Construction Phases

The construction of the project is anticipated to consist of two overall phases, with the first phase consisting of the construction of the hotel and retail land use components and project parking and the second phase consisting of the construction of the two residential condominium towers. It is important to note that demolition and remediation activities are already underway through a separate process with the County of Los Angeles. For each construction phase the following general construction activities are expected for the proposed project: Grading/Excavation, Sub-Grade and Above-Grade Building Construction. The total construction period is anticipated to last approximately 18 months for Phase I (hotel/retail) and approximately 24 months for Phase II (residential condominium towers). Based on information provided by the project applicant, the grading and excavation beneath the Phase II residential condominium site will overlap with Phase I construction activities. Phase I is anticipated to be operational in year 2016 and Phase II is expected to be operational in year 2019. The following subsections provide a general overview of the various phases of construction based on the submitted information.

15.1.1 Grading/Excavation Activities

This grading phase would include the excavation of existing fill materials and replacement with properly compacted fill materials. Heavy construction equipment would be located on-site during grading activities and would not be transported to and from the project site on a daily basis. It is anticipated that equipment needs associated with grading activities would include loaders, tractors, backhoes, rubber tired dozers, excavators and dump trucks, and other related heavy-duty equipment. The Phase I (hotel/retail) grading/excavation work along with the grading/excavation work under the Phase II (residential) site would likely produce up to an estimated 187,200 cubic yards of soil/material export. This corresponds to approximately 13,370 total truck loads for Phase I assuming tandem trucks with the capacity to carry 14 cubic yards of material per truck. On average, the project applicant has noted that up to a total of 1,750 cubic yards can be exported each day which equates to 125 trucks per day. Since excavation would involve hauling between the hours of 6:30 AM and 4:00 PM, a total of eight (8) hours per day has been assumed and could be expected to result in the generation of up to 16 trucks per hour. A duration of approximately 80 days (or roughly 3.6 months assuming 22 work days per month) is anticipated for the excavation activities associated with Phase I. In addition, up to 43 workers could be expected with these concurrent grading/excavation activities. No formal lane closures are anticipated with the excavation activities.

15.1.2 *Sub-Grade/Above-Grade Building Construction*

This phase would include the sub-grade and above grade structure construction of the project. It is anticipated that equipment needs associated with the construction activities would include cranes, forklifts, cement mixers, concrete trucks, water and concrete pumps, air compressors, pavers, and various miscellaneous machinery and related equipment. During the Phase I (hotel/retail/parking) construction period, a peak work force of approximately 100 workers is anticipated for the hotel construction, a peak work force of 85 workers is anticipated for the construction of the retail component, and a peak workforce of 150 workers is anticipated with the residential parking. Thus, a peak Phase I construction workforce of 335 workers could be anticipated along with up to 20 additional workers for a total of 355 workers. While some construction workers might be able to park on-site, the majority, if not all, workers are expected to park within an easy walking distance from the site in underutilized surface parking areas. The Construction Staging and Traffic Management Plan (CSTMP) would include identification of these off-site parking locations and as a condition of approval of the CSTMP, it would need to be demonstrated that the spaces have been secured. In addition, material delivery trucks and other miscellaneous trucks are also anticipated during this phase of construction. This work would likely produce an average of eight (8) material delivery trucks per day. This phase is anticipated to be completed in approximately 18 months.

During the Phase II (residential condominium towers) construction period, a peak work force of approximately 150 workers is anticipated. All Phase II construction workers would be able to park on-site since much of the parking supply constructed in Phase I would be available for use during Phase II construction activities. Material delivery trucks and other miscellaneous trucks are also anticipated during this phase of construction. This work would likely produce an average of eight (8) material delivery trucks per day. This phase is anticipated to be completed in approximately 24 months. Based on information provided by the project applicant, no formal lane closures are anticipated.

15.2 Construction Assumptions

It is assumed that the site will be completely cleared and that after completion of the first phase of short-term construction activities (i.e., excavation and grading), trenching and building construction would commence. The equipment staging area during the construction grading and parking garage construction is expected to occur on-site. After the completion of the retail parking garage, the equipment staging areas would be relocated on-site. With construction activity on the project site able to occur between the hours of 6:30 AM and 4:00 PM, it is assumed that the majority of the workers will work within one shift starting by 6:30 AM and concluding by 4:00 PM (with some workers ending their workday before 4:00 PM). A total of twenty percent (20%) of the workforce is expected to leave the site prior to 4:00 PM, sixty percent (60%) is expected to leave the site between 4:00 and 5:00 PM, and the remaining twenty percent (20%) is expected to leave the site after 5:00 PM, including foremen, supervisors, inspectors, etc.

15.3 Construction Traffic Trip Generation

Each of the construction phases outlined above was reviewed in detail with respect to construction worker and truck trip generation. It was determined that activities related to Phase I would generate the highest overall number of peak hour vehicle trips (i.e., combination of construction worker and truck/haul trips during either the weekday AM or PM commuter peak hours) as compared to the anticipated Phase II (residential condominium towers) building construction activities. As stated above, Phase I also includes the grading/excavation activities for the Phase II site. When reviewing the above construction program, it is apparent that the greatest potential for impact on the adjacent street system is expected to occur during Phase I excavation activities (i.e., for the weekday AM peak hour) and during Phase I building construction activities (i.e., for the weekday PM peak hour).

The following subsections identify the peak construction worker and truck trip generation individually as well as summarize the combined peak hour construction traffic generation which is expected during the weekday AM and PM peak hours during Phase I construction activities.

15.3.1 *Peak Construction Worker Demand*

During Phase I construction activities, a peak work force of 355 construction workers could be required. The typical construction activity is anticipated to begin at 6:30 AM and end at 4:00 PM. In general, the majority of the construction workers are expected to arrive at the project site during off-peak hours (i.e., arrive prior to 7:00 AM) thereby avoiding the weekday AM commute peak period. It is anticipated that construction workers would remain on-site throughout the day.

The number of construction worker vehicles is estimated using an average vehicle ridership (AVR) of 1.135 persons per vehicle (as provided in the South Coast Air Quality Management District in its CEQA Air Quality Handbook). Therefore, it is estimated that a peak of approximately 626 daily worker trips (313 inbound trips and 313 outbound trips) would be generated.

The construction workers would arrive at the project site prior to the weekday AM commute hour occurring between approximately 7:00 AM and 9:00 AM. The majority of the outbound worker trips would overlap with the weekday PM commute peak hour which occurs for one hour typically between 4:00 and 6:00 PM. Given a construction work schedule ending as early as 3:30 PM, it is anticipated that approximately sixty percent (60%) would leave the site during the weekday PM commute peak hour between 4:00 PM and 5:00 PM. Therefore, for purposes of this analysis, it is estimated that approximately 188 outbound worker trips could occur during the weekday PM commute peak hour. This is a very conservative estimate as many workers are anticipated to remain on-site past 5:00 PM.

It is anticipated that construction-related traffic would be largely freeway oriented. Construction workers would likely arrive and depart via nearby on- and off-ramps serving I-10 Freeway. The most commonly used freeway ramps would be nearest the project site, including I-10 Freeway ramps at Rosemead Boulevard, Aerojet Avenue, and Baldwin Avenue. The construction work force would likely be generated from all parts of the Los Angeles region and are thereby assumed to arrive from all directions. This general distribution (i.e., 75 percent on the freeways and 25 percent on local

roadways) could result in more than 50 vehicles at any one study intersection during the weekday PM peak hour. Since the proposed project results in significantly higher vehicle trip assignments to study locations than do construction activities, additional significant traffic impacts are not anticipated to occur at any of the study locations. Further, this weekday PM peak hour traffic increase is conservative as it does not reflect the traffic volumes which were previously generated to and from the site with the prior use/uses. However, in order to provide a conservative analysis it is concluded that some significant short-term/temporary traffic impacts at nearby intersections could occur during the PM peak hour due to construction worker travel.

As stated above, construction workers are expected to park within an easy walking distance of the project site during Phase I construction activities. The Construction Staging and Traffic Management Plan (CSTMP) would include identification of these off-site parking locations and as a condition of approval of the CSTMP, it would need to be demonstrated that the spaces have been secured. After the parking garage has been substantially completed and when possible depending on the time of Phase I hotel/retail occupancy and subsequent operation, parking for construction workers would be relocated back on-site.

15.3.2 *Peak Construction Truck Demand*

Heavy construction equipment would be located on-site during the grading/excavation activities and would not be transported to and from the project site on a daily basis. However, truck trips would be generated so as to remove material from the site, as export is expected to be the greatest during Phase I (hotel/retail) excavation activities which also includes the grading/excavation beneath the Phase II (residential) site. On average, the project applicant has noted that up to a total of 1,750 cubic yards can be exported each day and equates to 125 trucks per day. Since excavation would involve hauling between the hours of 6:30 AM and 4:00 PM, a total of eight (8) hours per day has been assumed and could be expected to result in the generation of up to 16 trucks per hour. In order to account for the affect that trucks have on overall intersection operations, PCE factors were accounted for in the analysis. Consistent with the Southern California Association of Governments (SCAG) *Heavy Duty Truck Model*[16], a PCE factor of 2.5 was incorporated into the traffic analysis (i.e., it is assumed that a single 14 cubic yard haul truck has the same overall effect on traffic operations as 2.5 passenger cars). This assumption is conservative and accounts for the heavy vehicle type and slower speeds when fully loaded. Therefore, 16 trucks per hour (i.e., 32 truck trips per hour) would correspond to 80 PCE-adjusted peak hour truck trips (32 trips × 2.5 PCE factor = 80 truck trips). Since construction trucks are expected to occur along designated truck/haul routes and no more than 80 PCE-adjusted vehicle trips are expected per hour, impacts from this particular type of construction activity source are expected to be less than those identified with the proposed project at operation.

It is anticipated that delivery trucks/construction equipment would be brought onto the project site and be stored within the perimeter fence of the construction site. As such, temporary lane closures are not anticipated. Any necessary sidewalk closures along the adjacent public streets (e.g., Flair

[16] *Heavy Duty Truck Model and VMT Estimation,* Southern California Association of Governments, November 1998.

Drive, Rio Hondo Avenue) to accommodate truck or equipment staging would require review and approval from the City. Flagmen would be used to control traffic movement during the ingress or egress of trucks and heavy equipment from the construction site. As noted in Subsection 15.5 herein, a construction traffic control plan will be developed to minimize potential conflicts between construction activity and through traffic, as required by the City.

While up to eight (8) material delivery trucks can be expected during both Phase I and Phase II building construction activities, these trucks do not coincide with the peak haul/export activities and as such are not analyzed for peak construction traffic generation purposes.

15.3.3 *Peak Construction Traffic Generation Summary*

Based on this comprehensive review, it is concluded that activities related to Phase I (hotel/retail/parking) grading/excavation activities and Phase I construction worker travel would generate the highest overall number of peak hour vehicle trips. During peak construction activities at the site for Phase I, a total of 80 PCE-adjusted peak hour truck trips are anticipated during the weekday AM peak hour. No construction worker-related traffic is anticipated during the weekday AM peak hour. During the weekday PM peak hour, a peak of 188 outbound construction worker vehicle trips could occur. It should be noted that the peak hour trips generated to and from the project site during the peak construction phase are less than the peak hour trips that will be generated by the site with the occupancy of the project. Therefore, the traffic impacts associated with construction activities are determined to be less than those expected with the proposed project. As such, it is conservatively assumed that traffic impacts during short-term construction activities are determined to be significant and unavoidable since the project's traffic mitigation measures would not yet be constructed.

15.4 Haul Routes

Approvals required by the City of El Monte for implementation of the proposed project include a Truck Haul Route program approved by the City of El Monte Department of Public Works. Based on current plans, haul trucks and delivery trucks would utilize a combination of roadways including Flair Drive, Rosemead Boulevard, Telstar Avenue, and the I-10 Freeway ramps in the vicinity of the project site.

15.5 Construction Traffic Impacts

With the required haul route approval, the generally off-peak arrival of construction workers, and the other construction management practices described above, impacts from construction activity, while concluded to be significant and unavoidable, can be minimized and further reduced with the implementation of the following design features:

- Maintain existing access for land uses in proximity of the project site;
- Prohibit any lane closures to the extent feasible;

- Schedule receipt of construction materials during non-peak travel periods, to the extent possible;
- Coordinate deliveries to reduce the potential of trucks waiting to unload for extended periods of time;
- Consider extending the construction haul hours prior to 6:30 AM and/or after 4:00 PM; and
- Prohibit parking by construction workers on adjacent streets and direct construction workers to available and designated parking areas.

In order to minimize potential conflicts between construction activity and through traffic, a CSTMP (or commonly referred to as a traffic control plan) will be developed for use during project construction. The CSTMP will identify all traffic control measures, signs, and delineators to be implemented by the construction contractor through the duration of demolition and construction activity. In addition, the City of El Monte Department of Public Works will review and be responsible for approval of the proposed Truck Haul Route program. To provide a conservative analysis, impacts during the short-term construction activities have been assumed to remain significant and unavoidable as the project's mitigation measures would not yet be constructed.

16.0 CONCLUSIONS

This traffic study has been prepared for the proposed Flair Spectrum Specific Plan. In order to evaluate the potential impacts to the local street system, 46 study intersections and ten (10) mainline freeway segments were analyzed to determine changes in operations following occupancy and utilization of the proposed project.

It was determined that the proposed project would result in direct, significant traffic impacts at eight (8) intersections and contribute to significant cumulative traffic impacts at two (2) additional intersections in the "Future Year 2016 With Phase I Project" conditions. The proposed project would result in direct, significant traffic impacts at 11 intersections and contribute to significant cumulative traffic impacts at two (2) additional intersections in the "Year 2019 With Project Build-out" conditions. Further, it was determined that the proposed project would result in direct, significant traffic impacts at 14 intersections and contribute to significant cumulative traffic impacts at two (2) additional intersections in the "Future Year 2035 With Project Build-out" conditions. For informational purposes, it was determined that the proposed project could result in significant traffic impacts at eight (8) intersections in the "Existing with Project Build-out" conditions.

While it is recognized that many study intersections are located entirely within the City of El Monte, many locations are either located entirely within or shared with another jurisdiction, including the State of California Department of Transportation (Caltrans). As such, several fair-share contributions are recommended in this study. As an example, based on the results of the Caltrans mainline freeway segment analysis, a fair-share contribution towards future study of regional improvements is expected. In addition, for study locations outside of the City of El Monte that are expected to be significantly impacted by the proposed project, the impacts have been conservatively assumed to remain as significant and unavoidable. This is due to the fact that the implementation of mitigation measures in other jurisdictions is not within the control of the City of El Monte.

The planned parking supply is expected to exceed that required through strict application of the City's Municipal Code parking requirements. Potential traffic impacts during project construction have been conservatively concluded to result in short-term/temporary significant and unavoidable impacts. In addition, an equivalency program is proposed which would provide for future flexibility should market changes occur.

APPENDIX A

TRAFFIC COUNT DATA

CITY TRAFFIC COUNTERS

626.991.7522

www.ctcounters.com

File Name : SG_Valley
Site Code : 00000000
Start Date : 6/4/2014
Page No : 1

Groups Printed- Unshifted

	San Gabriel Blvd Southbound			Valley Blvd Westbound			San Gabriel Blvd Northbound			Valley Blvd Eastbound			
Start Time	Left	Thru	Right	Left	Thru	Right	Left	Thru	Right	Left	Thru	Right	Int. Total
07:00 AM	6	123	11	24	149	9	11	114	26	7	35	8	523
07:15 AM	15	201	22	30	171	12	26	170	17	22	48	10	744
07:30 AM	17	187	35	39	201	22	20	188	23	25	96	20	873
07:45 AM	34	143	70	48	197	14	29	157	21	27	76	13	829
Total	72	654	138	141	718	57	86	629	87	81	255	51	2969
08:00 AM	20	192	40	53	217	16	31	126	23	24	96	11	849
08:15 AM	21	196	32	31	218	16	35	146	24	22	105	25	871
08:30 AM	21	145	34	48	254	10	29	170	25	22	96	23	877
08:45 AM	24	228	53	45	201	16	36	149	24	13	90	16	895
Total	86	761	159	177	890	58	131	591	96	81	387	75	3492
04:00 PM	40	163	30	53	136	18	32	149	30	61	212	39	963
04:15 PM	22	214	31	55	113	19	29	179	22	77	220	23	1004
04:30 PM	27	172	25	39	142	16	36	157	41	51	219	25	950
04:45 PM	28	168	46	59	136	26	36	183	44	75	205	31	1037
Total	117	717	132	206	527	79	133	668	137	264	856	118	3954
05:00 PM	33	175	20	57	170	25	30	174	18	67	207	36	1012
05:15 PM	21	231	46	55	120	20	35	212	40	68	221	23	1092
05:30 PM	29	165	33	49	149	19	34	188	46	68	264	31	1075
05:45 PM	26	192	45	49	141	25	29	184	71	52	218	27	1059
Total	109	763	144	210	580	89	128	758	175	255	910	117	4238
Grand Total	384	2895	573	734	2715	283	478	2646	495	681	2408	361	14653
Apprch %	10	75.2	14.9	19.7	72.7	7.6	13.2	73.1	13.7	19.7	69.8	10.5	
Total %	2.6	19.8	3.9	5	18.5	1.9	3.3	18.1	3.4	4.6	16.4	2.5	

CITY TRAFFIC COUNTERS

626.991.7522

www.ctcounters.com

File Name : SG_Valley
Site Code : 00000000
Start Date : 6/4/2014
Page No : 2

	San Gabriel Blvd Southbound				Valley Blvd Westbound				San Gabriel Blvd Northbound				Valley Blvd Eastbound				
Start Time	Left	Thru	Right	App. Total	Left	Thru	Right	App. Total	Left	Thru	Right	App. Total	Left	Thru	Right	App. Total	Int. Total
Peak Hour Analysis From 07:00 AM to 11:45 AM - Peak 1 of 1																	
Peak Hour for Entire Intersection Begins at 08:00 AM																	
08:00 AM	20	192	40	252	**53**	217	**16**	286	31	126	23	180	**24**	96	11	131	849
08:15 AM	21	196	32	249	31	218	16	265	35	146	24	205	22	**105**	**25**	**152**	871
08:30 AM	21	145	34	200	48	**254**	10	**312**	29	**170**	**25**	**224**	22	96	23	141	877
08:45 AM	**24**	**228**	**53**	**305**	45	201	16	262	**36**	149	24	209	13	90	16	119	**895**
Total Volume	86	761	159	1006	177	890	58	1125	131	591	96	818	81	387	75	543	3492
% App. Total	8.5	75.6	15.8		15.7	79.1	5.2		16	72.2	11.7		14.9	71.3	13.8		
PHF	.896	.834	.750	.825	.835	.876	.906	.901	.910	.869	.960	.913	.844	.921	.750	.893	.975

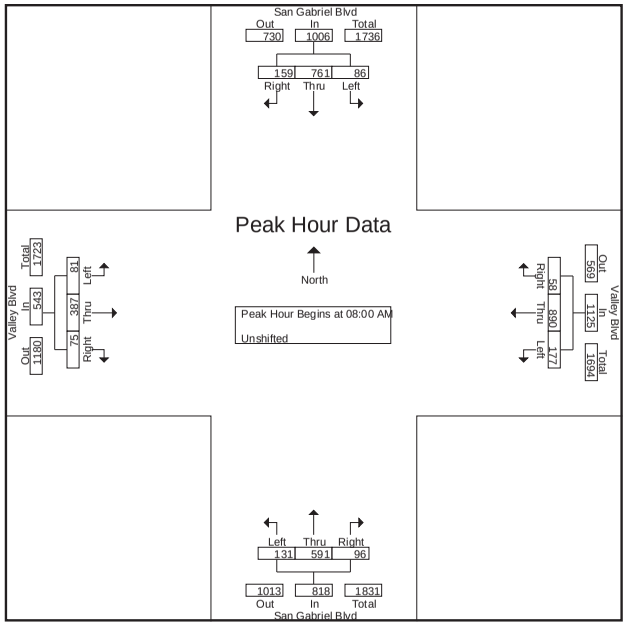

CITY TRAFFIC COUNTERS
626.991.7522
www.ctcounters.com

File Name : SG_Valley
Site Code : 00000000
Start Date : 6/4/2014
Page No : 3

	San Gabriel Blvd Southbound				Valley Blvd Westbound				San Gabriel Blvd Northbound				Valley Blvd Eastbound				
Start Time	Left	Thru	Right	App. Total	Left	Thru	Right	App. Total	Left	Thru	Right	App. Total	Left	Thru	Right	App. Total	Int. Total
Peak Hour Analysis From 12:00 PM to 05:45 PM - Peak 1 of 1																	
Peak Hour for Entire Intersection Begins at 05:00 PM																	
05:00 PM	**33**	175	20	228	**57**	**170**	**25**	**252**	30	174	18	222	67	207	**36**	310	1012
05:15 PM	21	**231**	**46**	**298**	55	120	20	195	**35**	**212**	40	**287**	**68**	221	23	312	**1092**
05:30 PM	29	165	33	227	49	149	19	217	34	188	46	268	68	**264**	31	**363**	1075
05:45 PM	26	192	45	263	49	141	25	215	29	184	**71**	284	52	218	27	297	1059
Total Volume	109	763	144	1016	210	580	89	879	128	758	175	1061	255	910	117	1282	4238
% App. Total	10.7	75.1	14.2		23.9	66	10.1		12.1	71.4	16.5		19.9	71	9.1		
PHF	.826	.826	.783	.852	.921	.853	.890	.872	.914	.894	.616	.924	.938	.862	.813	.883	.970

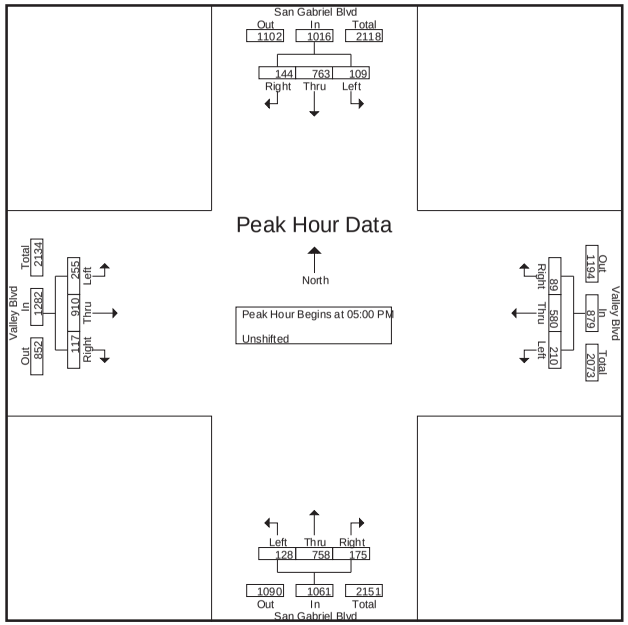

CITY TRAFFIC COUNTERS
626.991.7522
www.ctcounters.com

File Name : sangabriel_valley_sat
Site Code : 00000000
Start Date : 6/7/2014
Page No : 1

Groups Printed- Unshifted

	San Gabriel Blvd Southbound			Valley Blvd Westbound			San Gabriel Blvd Northbound			Valley Blvd Eastbound			
Start Time	Left	Thru	Right	Left	Thru	Right	Left	Thru	Right	Left	Thru	Right	Int. Total
12:00 PM	32	160	39	67	190	46	40	133	48	34	163	25	977
12:15 PM	34	184	52	66	184	39	40	159	84	48	182	38	1110
12:30 PM	59	163	41	61	146	40	42	160	60	56	190	55	1073
12:45 PM	38	164	47	63	141	41	42	151	74	62	173	32	1028
Total	163	671	179	257	661	166	164	603	266	200	708	150	4188
01:00 PM	36	161	35	49	156	42	52	165	62	47	213	43	1061
01:15 PM	21	190	45	61	157	34	37	185	61	57	181	48	1077
01:30 PM	38	174	51	59	158	37	31	176	52	32	204	33	1045
01:45 PM	21	179	43	54	158	30	31	183	61	59	212	45	1076
Total	116	704	174	223	629	143	151	709	236	195	810	169	4259
Grand Total	279	1375	353	480	1290	309	315	1312	502	395	1518	319	8447
Apprch %	13.9	68.5	17.6	23.1	62	14.9	14.8	61.6	23.6	17.7	68	14.3	
Total %	3.3	16.3	4.2	5.7	15.3	3.7	3.7	15.5	5.9	4.7	18	3.8	

CITY TRAFFIC COUNTERS
626.991.7522
www.ctcounters.com

File Name : sangabriel_valley_sat
Site Code : 00000000
Start Date : 6/7/2014
Page No : 2

	San Gabriel Blvd Southbound				Valley Blvd Westbound				San Gabriel Blvd Northbound				Valley Blvd Eastbound				
Start Time	Left	Thru	Right	App. Total	Left	Thru	Right	App. Total	Left	Thru	Right	App. Total	Left	Thru	Right	App. Total	Int. Total
Peak Hour Analysis From 12:00 PM to 01:45 PM - Peak 1 of 1																	
Peak Hour for Entire Intersection Begins at 12:15 PM																	
12:15 PM	34	**184**	**52**	**270**	**66**	**184**	39	**289**	40	159	**84**	**283**	48	182	38	268	**1110**
12:30 PM	**59**	163	41	263	61	146	40	247	42	160	60	262	56	190	**55**	301	1073
12:45 PM	38	164	47	249	63	141	41	245	42	151	74	267	**62**	173	32	267	1028
01:00 PM	36	161	35	232	49	156	**42**	247	**52**	**165**	62	279	47	**213**	43	**303**	1061
Total Volume	167	672	175	1014	239	627	162	1028	176	635	280	1091	213	758	168	1139	4272
% App. Total	16.5	66.3	17.3		23.2	61	15.8		16.1	58.2	25.7		18.7	66.5	14.7		
PHF	.708	.913	.841	.939	.905	.852	.964	.889	.846	.962	.833	.964	.859	.890	.764	.940	.962

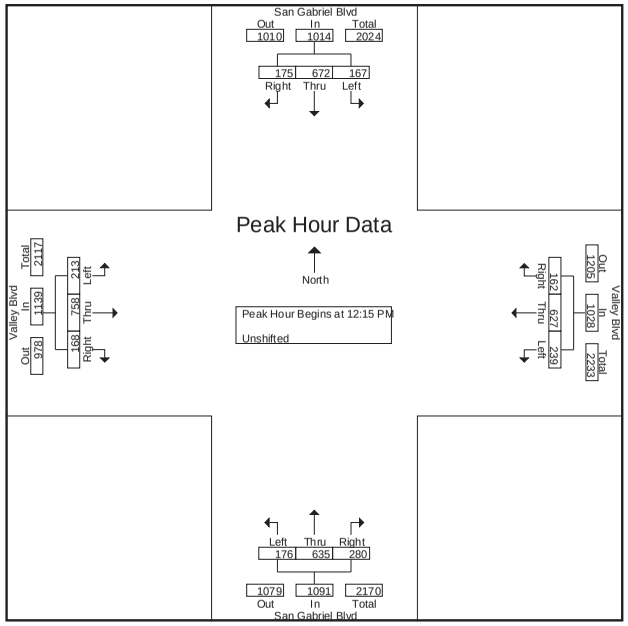

CITY TRAFFIC COUNTERS
626.991.7522
www.ctcounters.com

File Name : WG_Valley
Site Code : 00000000
Start Date : 6/4/2014
Page No : 1

Groups Printed- Unshifted

	Walnut Grove Ave Southbound			Valley Blvd Westbound			Walnut Grove Ave Northbound			Valley Blvd Eastbound			
Start Time	Left	Thru	Right	Left	Thru	Right	Left	Thru	Right	Left	Thru	Right	Int. Total
07:00 AM	10	88	17	27	153	11	15	71	14	5	39	11	461
07:15 AM	9	119	23	31	186	12	17	85	13	8	71	19	593
07:30 AM	15	218	24	40	226	13	25	130	32	1	122	18	864
07:45 AM	12	167	38	60	269	16	25	126	35	0	158	20	926
Total	46	592	102	158	834	52	82	412	94	14	390	68	2844
08:00 AM	8	188	44	41	227	18	24	99	27	0	116	21	813
08:15 AM	8	165	31	53	279	5	30	85	22	13	143	20	854
08:30 AM	13	183	34	39	232	6	32	99	29	25	90	26	808
08:45 AM	12	156	41	47	268	12	31	116	53	16	125	30	907
Total	41	692	150	180	1006	41	117	399	131	54	474	97	3382
04:00 PM	12	119	20	34	178	14	25	95	46	32	237	36	848
04:15 PM	10	117	30	44	153	5	23	141	38	18	232	34	845
04:30 PM	10	130	11	46	157	3	18	116	51	23	232	25	822
04:45 PM	13	115	25	31	178	13	32	165	32	22	224	33	883
Total	45	481	86	155	666	35	98	517	167	95	925	128	3398
05:00 PM	12	131	19	46	199	10	33	153	26	29	233	23	914
05:15 PM	9	132	18	41	147	13	37	156	53	30	211	39	886
05:30 PM	18	141	25	45	168	21	26	197	51	32	242	21	987
05:45 PM	19	145	31	43	166	15	38	182	47	26	238	34	984
Total	58	549	93	175	680	59	134	688	177	117	924	117	3771
Grand Total	190	2314	431	668	3186	187	431	2016	569	280	2713	410	13395
Apprch %	6.5	78.8	14.7	16.5	78.8	4.6	14.3	66.8	18.9	8.2	79.7	12	
Total %	1.4	17.3	3.2	5	23.8	1.4	3.2	15.1	4.2	2.1	20.3	3.1	

CITY TRAFFIC COUNTERS
626.991.7522
www.ctcounters.com

File Name : WG_Valley
Site Code : 00000000
Start Date : 6/4/2014
Page No : 2

	Walnut Grove Ave Southbound				Valley Blvd Westbound				Walnut Grove Ave Northbound				Valley Blvd Eastbound				
Start Time	Left	Thru	Right	App. Total	Left	Thru	Right	App. Total	Left	Thru	Right	App. Total	Left	Thru	Right	App. Total	Int. Total
Peak Hour Analysis From 07:00 AM to 11:45 AM - Peak 1 of 1																	
Peak Hour for Entire Intersection Begins at 07:30 AM																	
07:30 AM	**15**	**218**	24	**257**	40	226	13	279	25	**130**	32	**187**	1	122	18	141	864
07:45 AM	12	167	38	217	**60**	269	16	**345**	25	126	**35**	186	0	**158**	20	**178**	**926**
08:00 AM	8	188	**44**	240	41	227	**18**	286	24	99	27	150	0	116	**21**	137	813
08:15 AM	8	165	31	204	53	**279**	5	337	**30**	85	22	137	**13**	143	20	176	854
Total Volume	43	738	137	918	194	1001	52	1247	104	440	116	660	14	539	79	632	3457
% App. Total	4.7	80.4	14.9		15.6	80.3	4.2		15.8	66.7	17.6		2.2	85.3	12.5		
PHF	.717	.846	.778	.893	.808	.897	.722	.904	.867	.846	.829	.882	.269	.853	.940	.888	.933

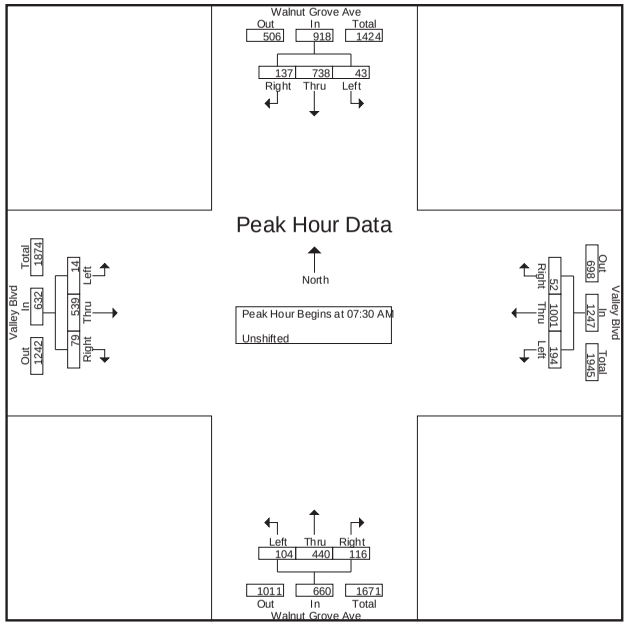

CITY TRAFFIC COUNTERS
626.991.7522
www.ctcounters.com

File Name : WG_Valley
Site Code : 00000000
Start Date : 6/4/2014
Page No : 3

	Walnut Grove Ave Southbound				Valley Blvd Westbound				Walnut Grove Ave Northbound				Valley Blvd Eastbound				
Start Time	Left	Thru	Right	App. Total	Left	Thru	Right	App. Total	Left	Thru	Right	App. Total	Left	Thru	Right	App. Total	Int. Total
Peak Hour Analysis From 12:00 PM to 05:45 PM - Peak 1 of 1																	
Peak Hour for Entire Intersection Begins at 05:00 PM																	
05:00 PM	12	131	19	162	**46**	**199**	10	**255**	33	153	26	212	29	233	23	285	914
05:15 PM	9	132	18	159	41	147	13	201	37	156	**53**	246	30	211	**39**	280	886
05:30 PM	18	141	25	184	45	168	**21**	234	26	**197**	51	**274**	**32**	**242**	21	295	**987**
05:45 PM	**19**	**145**	**31**	**195**	43	166	15	224	**38**	182	47	267	26	238	34	**298**	984
Total Volume	58	549	93	700	175	680	59	914	134	688	177	999	117	924	117	1158	3771
% App. Total	8.3	78.4	13.3		19.1	74.4	6.5		13.4	68.9	17.7		10.1	79.8	10.1		
PHF	.763	.947	.750	.897	.951	.854	.702	.896	.882	.873	.835	.911	.914	.955	.750	.971	.955

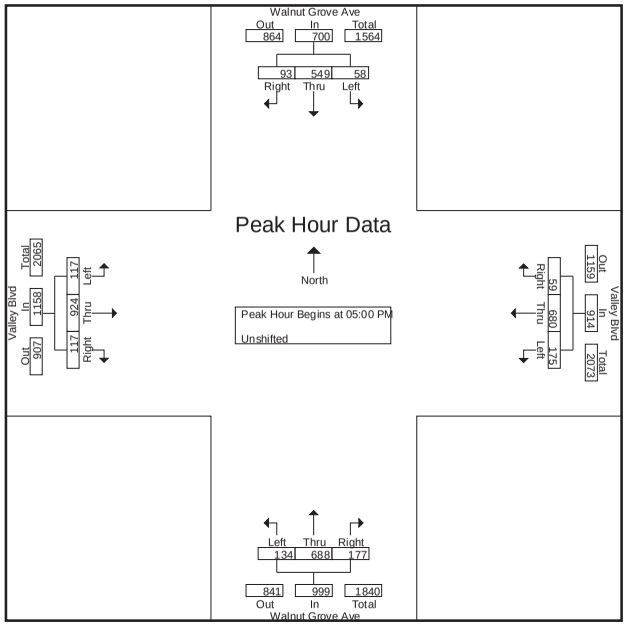

CITY TRAFFIC COUNTERS
626.991.7522
www.ctcounters.com

File Name : walnutgrove_valley_sat
Site Code : 00000000
Start Date : 6/7/2014
Page No : 1

Groups Printed- Unshifted

	Walnut Grove Ave Southbound			Valley Blvd Westbound			Walnut Grove Ave Northbound			Valley Blvd Eastbound			
Start Time	Left	Thru	Right	Left	Thru	Right	Left	Thru	Right	Left	Thru	Right	Int. Total
12:00 PM	8	125	40	40	260	13	39	110	50	31	210	53	979
12:15 PM	12	124	38	44	240	14	34	110	51	32	227	45	971
12:30 PM	14	123	27	30	198	8	40	105	34	23	198	47	847
12:45 PM	12	96	21	38	189	10	36	85	39	16	195	30	767
Total	46	468	126	152	887	45	149	410	174	102	830	175	3564
01:00 PM	13	100	29	44	206	16	36	102	40	22	192	43	843
01:15 PM	14	93	31	46	207	11	30	89	43	25	219	37	845
01:30 PM	12	122	29	52	210	15	31	116	38	31	213	43	912
01:45 PM	5	99	18	41	213	10	32	84	38	27	242	54	863
Total	44	414	107	183	836	52	129	391	159	105	866	177	3463
Grand Total	90	882	233	335	1723	97	278	801	333	207	1696	352	7027
Apprch %	7.5	73.2	19.3	15.5	80	4.5	19.7	56.7	23.6	9.2	75.2	15.6	
Total %	1.3	12.6	3.3	4.8	24.5	1.4	4	11.4	4.7	2.9	24.1	5	

CITY TRAFFIC COUNTERS
626.991.7522
www.ctcounters.com

File Name : walnutgrove_valley_sat
Site Code : 00000000
Start Date : 6/7/2014
Page No : 2

	Walnut Grove Ave Southbound				Valley Blvd Westbound				Walnut Grove Ave Northbound				Valley Blvd Eastbound				
Start Time	Left	Thru	Right	App. Total	Left	Thru	Right	App. Total	Left	Thru	Right	App. Total	Left	Thru	Right	App. Total	Int. Total
Peak Hour Analysis From 12:00 PM to 01:45 PM - Peak 1 of 1																	
Peak Hour for Entire Intersection Begins at 12:00 PM																	
12:00 PM	8	**125**	**40**	173	40	**260**	13	**313**	39	**110**	50	**199**	31	210	**53**	294	**979**
12:15 PM	12	124	38	**174**	**44**	240	**14**	298	34	110	**51**	195	**32**	**227**	45	**304**	971
12:30 PM	**14**	123	27	164	30	198	8	236	**40**	105	34	179	23	198	47	268	847
12:45 PM	12	96	21	129	38	189	10	237	36	85	39	160	16	195	30	241	767
Total Volume	46	468	126	640	152	887	45	1084	149	410	174	733	102	830	175	1107	3564
% App. Total	7.2	73.1	19.7		14	81.8	4.2		20.3	55.9	23.7		9.2	75	15.8		
PHF	.821	.936	.788	.920	.864	.853	.804	.866	.931	.932	.853	.921	.797	.914	.825	.910	.910

CITY TRAFFIC COUNTERS

626.991.7522

www.ctcounters.com

File Name : WGroveGarvey
Site Code : 00000000
Start Date : 4/29/2014
Page No : 1

Groups Printed- Unshifted

	Walnut Grove Ave Southbound			Garvey Ave Westbound			Walnut Grove Ave Northbound			Garvey Ave Eastbound			
Start Time	Left	Thru	Right	Left	Thru	Right	Left	Thru	Right	Left	Thru	Right	Int. Total
07:00 AM	21	90	15	11	108	14	7	63	11	12	55	11	418
07:15 AM	32	97	18	22	132	22	13	81	14	18	71	8	528
07:30 AM	31	153	29	20	177	21	22	139	18	29	133	15	787
07:45 AM	44	148	30	29	190	25	30	103	11	21	197	17	845
Total	128	488	92	82	607	82	72	386	54	80	456	51	2578
08:00 AM	50	206	31	43	179	17	45	90	16	30	201	15	923
08:15 AM	45	177	18	23	166	24	22	67	19	23	213	11	808
08:30 AM	48	151	25	21	181	19	15	87	14	15	197	17	790
08:45 AM	46	146	31	29	204	33	13	73	22	28	166	17	808
Total	189	680	105	116	730	93	95	317	71	96	777	60	3329
04:00 PM	37	93	20	30	169	62	19	135	24	30	146	19	784
04:15 PM	46	105	23	23	156	46	13	127	31	23	180	29	802
04:30 PM	36	124	11	27	177	71	17	163	32	29	174	20	881
04:45 PM	38	98	14	24	184	47	25	184	27	26	164	18	849
Total	157	420	68	104	686	226	74	609	114	108	664	86	3316
05:00 PM	30	111	27	35	186	78	23	199	41	25	188	15	958
05:15 PM	49	99	12	37	222	52	30	194	28	27	216	18	984
05:30 PM	45	163	28	29	187	51	33	234	44	44	182	19	1059
05:45 PM	42	132	34	35	249	68	33	174	24	39	203	19	1052
Total	166	505	101	136	844	249	119	801	137	135	789	71	4053
Grand Total	640	2093	366	438	2867	650	360	2113	376	419	2686	268	13276
Apprch %	20.7	67.5	11.8	11.1	72.5	16.4	12.6	74.2	13.2	12.4	79.6	7.9	
Total %	4.8	15.8	2.8	3.3	21.6	4.9	2.7	15.9	2.8	3.2	20.2	2	

CITY TRAFFIC COUNTERS

626.991.7522

www.ctcounters.com

File Name : WGroveGarvey
Site Code : 00000000
Start Date : 4/29/2014
Page No : 2

	Walnut Grove Ave Southbound				Garvey Ave Westbound				Walnut Grove Ave Northbound				Garvey Ave Eastbound				
Start Time	Left	Thru	Right	App. Total	Left	Thru	Right	App. Total	Left	Thru	Right	App. Total	Left	Thru	Right	App. Total	Int. Total
Peak Hour Analysis From 07:00 AM to 11:45 AM - Peak 1 of 1																	
Peak Hour for Entire Intersection Begins at 07:45 AM																	
07:45 AM	44	148	30	222	29	**190**	**25**	**244**	30	**103**	11	144	21	197	**17**	235	845
08:00 AM	**50**	**206**	**31**	**287**	**43**	179	17	239	**45**	90	16	**151**	**30**	201	15	246	**923**
08:15 AM	45	177	18	240	23	166	24	213	22	67	**19**	108	23	**213**	11	**247**	808
08:30 AM	48	151	25	224	21	181	19	221	15	87	14	116	15	197	17	229	790
Total Volume	187	682	104	973	116	716	85	917	112	347	60	519	89	808	60	957	3366
% App. Total	19.2	70.1	10.7		12.6	78.1	9.3		21.6	66.9	11.6		9.3	84.4	6.3		
PHF	.935	.828	.839	.848	.674	.942	.850	.940	.622	.842	.789	.859	.742	.948	.882	.969	.912

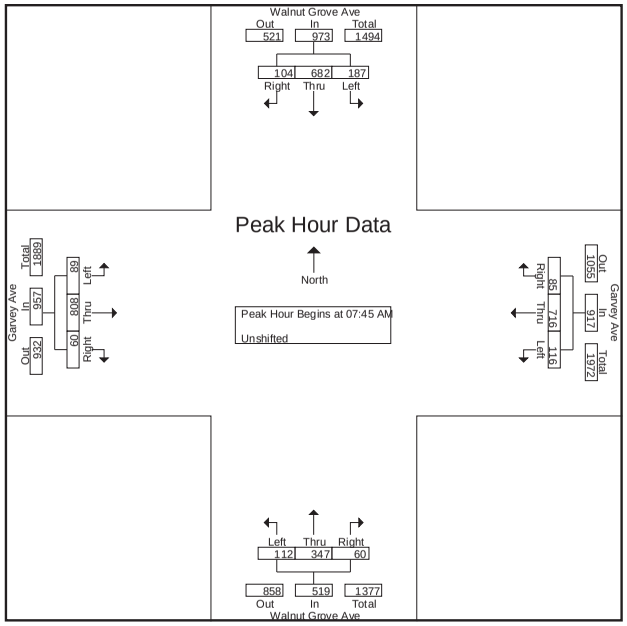

CITY TRAFFIC COUNTERS

626.991.7522

www.ctcounters.com

File Name : WGroveGarvey
Site Code : 00000000
Start Date : 4/29/2014
Page No : 3

	Walnut Grove Ave Southbound				Garvey Ave Westbound				Walnut Grove Ave Northbound				Garvey Ave Eastbound				
Start Time	Left	Thru	Right	App. Total	Left	Thru	Right	App. Total	Left	Thru	Right	App. Total	Left	Thru	Right	App. Total	Int. Total
Peak Hour Analysis From 12:00 PM to 05:45 PM - Peak 1 of 1																	
Peak Hour for Entire Intersection Begins at 05:00 PM																	
05:00 PM	30	111	27	168	35	186	**78**	299	23	199	41	263	25	188	15	228	958
05:15 PM	**49**	99	12	160	**37**	222	52	311	30	194	28	252	27	**216**	18	**261**	984
05:30 PM	45	**163**	28	**236**	29	187	51	267	**33**	**234**	**44**	**311**	**44**	182	**19**	245	**1059**
05:45 PM	42	132	**34**	208	35	**249**	68	**352**	33	174	24	231	39	203	19	261	1052
Total Volume	166	505	101	772	136	844	249	1229	119	801	137	1057	135	789	71	995	4053
% App. Total	21.5	65.4	13.1		11.1	68.7	20.3		11.3	75.8	13		13.6	79.3	7.1		
PHF	.847	.775	.743	.818	.919	.847	.798	.873	.902	.856	.778	.850	.767	.913	.934	.953	.957

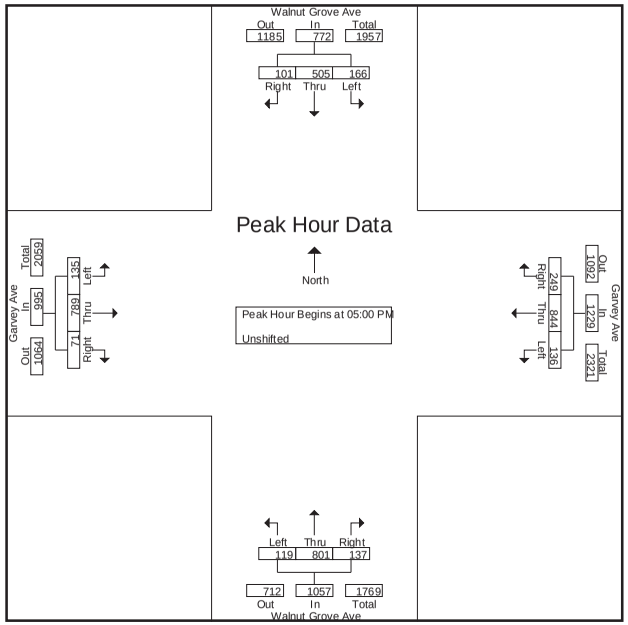

CITY TRAFFIC COUNTERS

626.991.7522

www.ctcounters.com

File Name : WGroveGarvey_2Axle
Site Code : 00000000
Start Date : 4/29/2014
Page No : 1

Groups Printed- Bank 1

	Walnut Grove Ave Southbound			Garvey Ave Westbound			Walnut Grove Ave Northbound			Garvey Ave Eastbound			
Start Time	Left	Thru	Right	Left	Thru	Right	Left	Thru	Right	Left	Thru	Right	Int. Total
07:00 AM	1	3	2	2	4	3	2	0	0	0	2	0	19
07:15 AM	0	0	1	1	4	1	2	4	1	0	4	0	18
07:30 AM	1	1	0	1	4	1	0	0	2	1	4	1	16
07:45 AM	1	0	1	1	10	2	0	1	2	0	2	0	20
Total	3	4	4	5	22	7	4	5	5	1	12	1	73
08:00 AM	0	2	1	2	3	1	1	2	1	0	5	0	18
08:15 AM	0	0	1	2	6	0	0	1	0	2	5	1	18
08:30 AM	1	1	0	0	9	2	0	0	3	0	4	0	20
08:45 AM	1	1	0	1	8	0	0	2	0	1	4	0	18
Total	2	4	2	5	26	3	1	5	4	3	18	1	74
04:00 PM	1	4	1	1	3	0	0	1	1	0	2	0	14
04:15 PM	0	1	0	0	6	1	0	0	0	0	10	0	18
04:30 PM	1	0	2	1	4	0	0	4	2	0	6	1	21
04:45 PM	0	0	0	0	1	1	0	3	3	1	2	0	11
Total	2	5	3	2	14	2	0	8	6	1	20	1	64
05:00 PM	0	1	1	0	2	2	0	1	0	0	6	0	13
05:15 PM	0	1	3	2	1	2	1	0	1	0	4	0	15
05:30 PM	0	1	1	0	3	1	1	1	0	0	1	0	9
05:45 PM	1	1	2	0	2	0	0	0	0	1	6	0	13
Total	1	4	7	2	8	5	2	2	1	1	17	0	50
Grand Total	8	17	16	14	70	17	7	20	16	6	67	3	261
Apprch %	19.5	41.5	39	13.9	69.3	16.8	16.3	46.5	37.2	7.9	88.2	3.9	
Total %	3.1	6.5	6.1	5.4	26.8	6.5	2.7	7.7	6.1	2.3	25.7	1.1	

CITY TRAFFIC COUNTERS

626.991.7522

www.ctcounters.com

File Name : WGroveGarvey_2Axle
Site Code : 00000000
Start Date : 4/29/2014
Page No : 2

	Walnut Grove Ave Southbound				Garvey Ave Westbound				Walnut Grove Ave Northbound				Garvey Ave Eastbound				
Start Time	Left	Thru	Right	App. Total	Left	Thru	Right	App. Total	Left	Thru	Right	App. Total	Left	Thru	Right	App. Total	Int. Total
Peak Hour Analysis From 07:00 AM to 11:45 AM - Peak 1 of 1																	
Peak Hour for Entire Intersection Begins at 07:45 AM																	
07:45 AM	**1**	0	**1**	2	1	**10**	**2**	**13**	0	1	2	3	0	2	0	2	**20**
08:00 AM	0	**2**	1	**3**	**2**	3	1	6	**1**	**2**	1	**4**	0	**5**	0	5	18
08:15 AM	0	0	1	1	2	6	0	8	0	1	0	1	**2**	5	**1**	**8**	18
08:30 AM	1	1	0	2	0	9	2	11	0	0	**3**	3	0	4	0	4	20
Total Volume	2	3	3	8	5	28	5	38	1	4	6	11	2	16	1	19	76
% App. Total	25	37.5	37.5		13.2	73.7	13.2		9.1	36.4	54.5		10.5	84.2	5.3		
PHF	.500	.375	.750	.667	.625	.700	.625	.731	.250	.500	.500	.688	.250	.800	.250	.594	.950

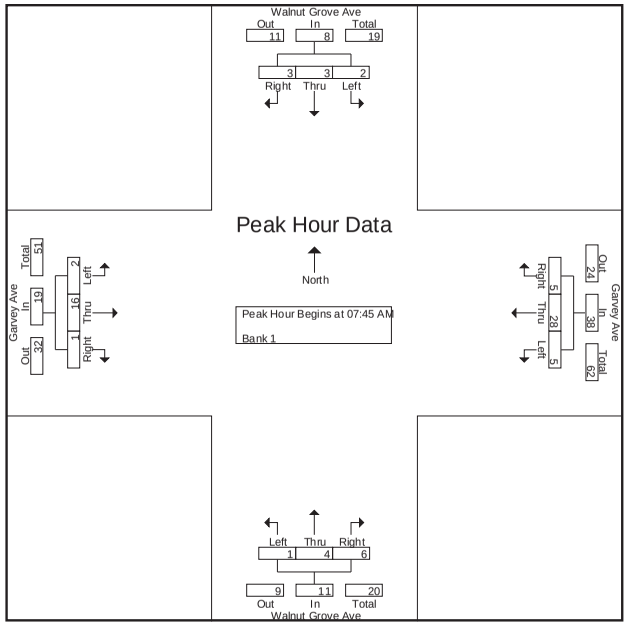

CITY TRAFFIC COUNTERS

626.991.7522

www.ctcounters.com

File Name : WGroveGarvey_2Axle
Site Code : 00000000
Start Date : 4/29/2014
Page No : 3

	Walnut Grove Ave Southbound				Garvey Ave Westbound				Walnut Grove Ave Northbound				Garvey Ave Eastbound				
Start Time	Left	Thru	Right	App. Total	Left	Thru	Right	App. Total	Left	Thru	Right	App. Total	Left	Thru	Right	App. Total	Int. Total
Peak Hour Analysis From 12:00 PM to 05:45 PM - Peak 1 of 1																	
Peak Hour for Entire Intersection Begins at 04:00 PM																	
04:00 PM	**1**	**4**	1	**6**	**1**	3	0	4	0	1	1	2	0	2	0	2	14
04:15 PM	0	1	0	1	0	**6**	**1**	**7**	0	0	0	0	0	**10**	0	**10**	18
04:30 PM	1	0	**2**	3	1	4	0	5	0	**4**	2	**6**	0	6	**1**	7	**21**
04:45 PM	0	0	0	0	0	1	1	2	0	3	**3**	6	**1**	2	0	3	11
Total Volume	2	5	3	10	2	14	2	18	0	8	6	14	1	20	1	22	64
% App. Total	20	50	30		11.1	77.8	11.1		0	57.1	42.9		4.5	90.9	4.5		
PHF	.500	.313	.375	.417	.500	.583	.500	.643	.000	.500	.500	.583	.250	.500	.250	.550	.762

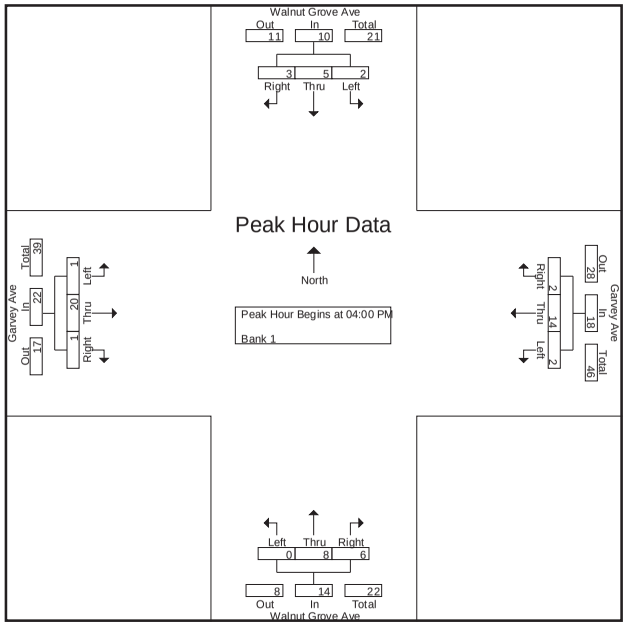

CITY TRAFFIC COUNTERS

626.991.7522

www.ctcounters.com

File Name : WGroveGarvey_3Axle
Site Code : 00000000
Start Date : 4/29/2014
Page No : 1

Groups Printed- Bank 2

	Walnut Grove Ave Southbound			Garvey Ave Westbound			Walnut Grove Ave Northbound			Garvey Ave Eastbound			
Start Time	Left	Thru	Right	Left	Thru	Right	Left	Thru	Right	Left	Thru	Right	Int. Total
07:15 AM	0	0	0	0	1	0	0	0	0	0	0	0	1
07:30 AM	0	0	0	0	0	0	0	0	0	1	0	0	1
07:45 AM	0	0	0	1	2	0	0	0	0	0	0	0	3
Total	0	0	0	1	3	0	0	0	0	1	0	0	5
08:00 AM	0	0	0	0	1	0	0	0	0	0	1	0	2
08:15 AM	1	0	0	0	0	0	0	0	0	0	0	0	1
08:30 AM	0	0	0	0	3	1	0	0	0	0	0	0	4
08:45 AM	0	1	0	0	3	0	0	0	0	0	0	0	4
Total	1	1	0	0	7	1	0	0	0	0	1	0	11
04:00 PM	0	0	0	0	0	1	1	0	0	0	0	0	2
04:15 PM	0	0	0	0	0	1	0	1	0	0	0	0	2
04:30 PM	0	0	0	0	1	0	0	1	0	0	0	0	2
04:45 PM	0	0	0	0	1	3	1	0	0	0	0	0	5
Total	0	0	0	0	2	5	2	2	0	0	0	0	11
05:00 PM	0	0	0	0	0	1	0	0	0	0	0	0	1
05:15 PM	0	0	0	0	0	0	1	0	0	0	0	0	1
05:30 PM	0	0	0	0	0	0	1	1	0	0	0	0	2
05:45 PM	0	0	0	0	0	0	0	0	0	0	1	0	1
Total	0	0	0	0	0	1	2	1	0	0	1	0	5
Grand Total	1	1	0	1	12	7	4	3	0	1	2	0	32
Apprch %	50	50	0	5	60	35	57.1	42.9	0	33.3	66.7	0	
Total %	3.1	3.1	0	3.1	37.5	21.9	12.5	9.4	0	3.1	6.2	0	

CITY TRAFFIC COUNTERS

626.991.7522

www.ctcounters.com

File Name : WGroveGarvey_3Axle
Site Code : 00000000
Start Date : 4/29/2014
Page No : 2

	Walnut Grove Ave Southbound				Garvey Ave Westbound				Walnut Grove Ave Northbound				Garvey Ave Eastbound				
Start Time	Left	Thru	Right	App. Total	Left	Thru	Right	App. Total	Left	Thru	Right	App. Total	Left	Thru	Right	App. Total	Int. Total
Peak Hour Analysis From 07:00 AM to 11:45 AM - Peak 1 of 1																	
Peak Hour for Entire Intersection Begins at 08:00 AM																	
08:00 AM	0	0	0	0	0	1	0	1	0	0	0	0	0	**1**	0	**1**	2
08:15 AM	**1**	0	0	**1**	0	0	0	0	0	0	0	0	0	0	0	0	1
08:30 AM	0	0	0	0	0	**3**	**1**	**4**	0	0	0	0	0	0	0	0	**4**
08:45 AM	0	**1**	0	1	0	3	0	3	0	0	0	0	0	0	0	0	4
Total Volume	1	1	0	2	0	7	1	8	0	0	0	0	0	1	0	1	11
% App. Total	50	50	0		0	87.5	12.5		0	0	0		0	100	0		
PHF	.250	.250	.000	.500	.000	.583	.250	.500	.000	.000	.000	.000	.000	.250	.000	.250	.688

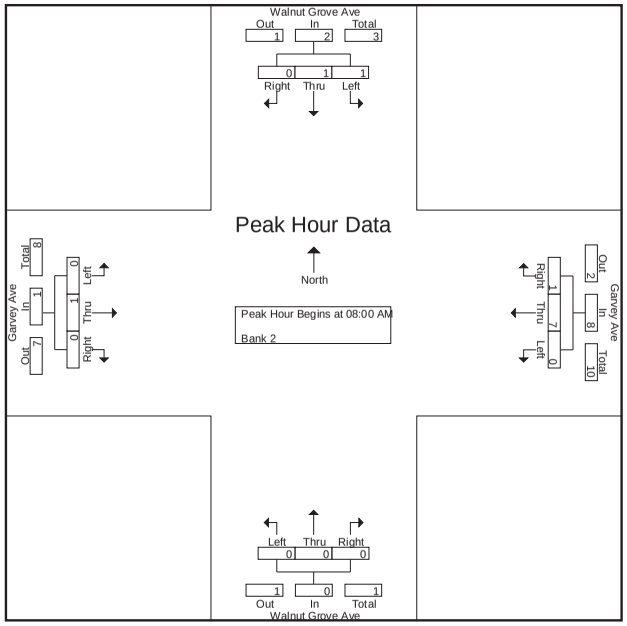

CITY TRAFFIC COUNTERS

626.991.7522

www.ctcounters.com

File Name : WGroveGarvey_3Axle
Site Code : 00000000
Start Date : 4/29/2014
Page No : 3

	Walnut Grove Ave Southbound				Garvey Ave Westbound				Walnut Grove Ave Northbound				Garvey Ave Eastbound				
Start Time	Left	Thru	Right	App. Total	Left	Thru	Right	App. Total	Left	Thru	Right	App. Total	Left	Thru	Right	App. Total	Int. Total
Peak Hour Analysis From 12:00 PM to 05:45 PM - Peak 1 of 1																	
Peak Hour for Entire Intersection Begins at 04:00 PM																	
04:00 PM	0	0	0	0	0	0	1	1	**1**	0	0	**1**	0	0	0	0	2
04:15 PM	0	0	0	0	0	0	1	1	0	**1**	0	1	0	0	0	0	2
04:30 PM	0	0	0	0	0	**1**	0	1	0	1	0	1	0	0	0	0	2
04:45 PM	0	0	0	0	0	1	**3**	**4**	1	0	0	1	0	0	0	0	**5**
Total Volume	0	0	0	0	0	2	5	7	2	2	0	4	0	0	0	0	11
% App. Total	0	0	0		0	28.6	71.4		50	50	0		0	0	0		
PHF	.000	.000	.000	.000	.000	.500	.417	.438	.500	.500	.000	1.00	.000	.000	.000	.000	.550

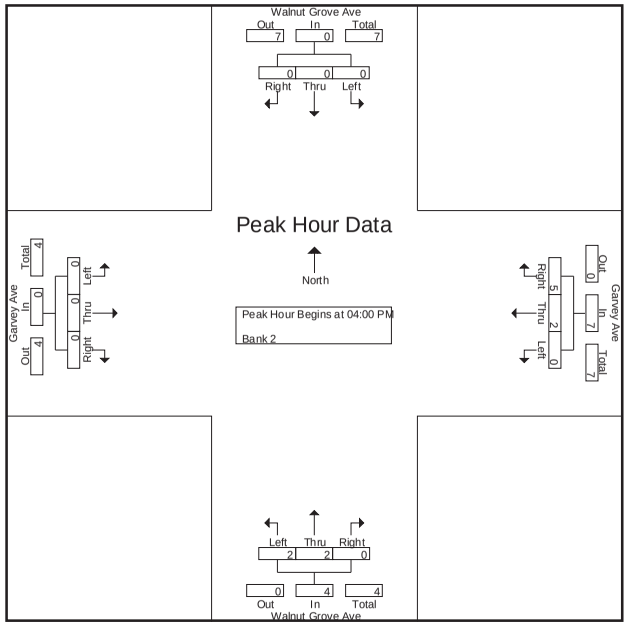

CITY TRAFFIC COUNTERS

626.991.7522

www.ctcounters.com

File Name : WGroveGarvey_4Axle
Site Code : 00000000
Start Date : 4/29/2014
Page No : 1

Groups Printed- Unshifted

	Walnut Grove Ave Southbound			Garvey Ave Westbound			Walnut Grove Ave Northbound			Garvey Ave Eastbound			
Start Time	Left	Thru	Right	Left	Thru	Right	Left	Thru	Right	Left	Thru	Right	Int. Total
07:00 AM	0	0	0	0	2	1	0	0	0	1	0	0	4
07:30 AM	0	0	0	0	0	0	1	0	0	0	0	0	1
07:45 AM	0	1	0	0	0	0	0	0	0	0	0	0	1
Total	0	1	0	0	2	1	1	0	0	1	0	0	6
08:30 AM	0	0	0	0	0	0	0	0	1	0	0	0	1
08:45 AM	0	0	0	0	1	0	0	0	0	0	0	0	1
Total	0	0	0	0	1	0	0	0	1	0	0	0	2
04:00 PM	0	0	0	0	0	0	1	2	0	0	0	0	3
04:30 PM	0	0	0	0	0	0	0	0	0	0	1	0	1
04:45 PM	0	0	0	0	1	0	0	0	0	0	0	0	1
Total	0	0	0	0	1	0	1	2	0	0	1	0	5
Grand Total	0	1	0	0	4	1	2	2	1	1	1	0	13
Apprch %	0	100	0	0	80	20	40	40	20	50	50	0	
Total %	0	7.7	0	0	30.8	7.7	15.4	15.4	7.7	7.7	7.7	0	

CITY TRAFFIC COUNTERS
626.991.7522
www.ctcounters.com

File Name : WGroveGarvey_4Axle
Site Code : 00000000
Start Date : 4/29/2014
Page No : 2

	Walnut Grove Ave Southbound				Garvey Ave Westbound				Walnut Grove Ave Northbound				Garvey Ave Eastbound				
Start Time	Left	Thru	Right	App. Total	Left	Thru	Right	App. Total	Left	Thru	Right	App. Total	Left	Thru	Right	App. Total	Int. Total
Peak Hour Analysis From 07:00 AM to 11:45 AM - Peak 1 of 1																	
Peak Hour for Entire Intersection Begins at 07:00 AM																	
07:00 AM	0	0	0	0	0	**2**	**1**	**3**	0	0	0	0	**1**	0	0	**1**	**4**
07:15 AM	0	0	0	0	0	0	0	0	0	0	0	0	0	0	0	0	0
07:30 AM	0	0	0	0	0	0	0	0	**1**	0	0	**1**	0	0	0	0	1
07:45 AM	0	**1**	0	**1**	0	0	0	0	0	0	0	0	0	0	0	0	1
Total Volume	0	1	0	1	0	2	1	3	1	0	0	1	1	0	0	1	6
% App. Total	0	100	0		0	66.7	33.3		100	0	0		100	0	0		
PHF	.000	.250	.000	.250	.000	.250	.250	.250	.250	.000	.000	.250	.250	.000	.000	.250	.375

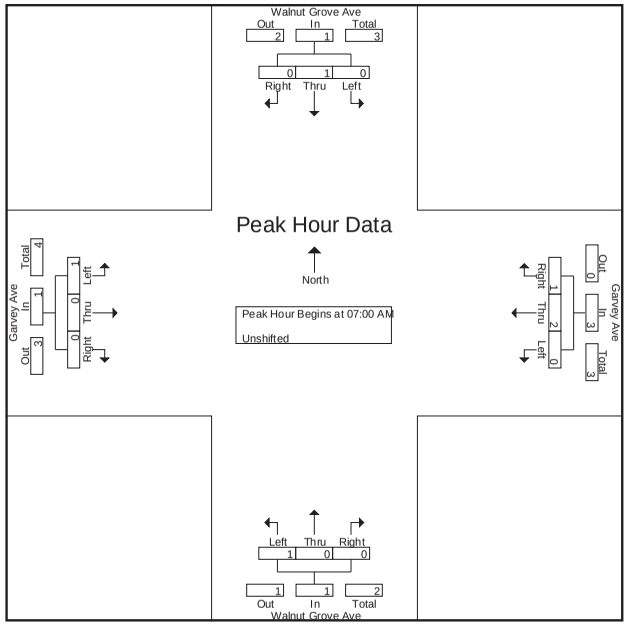

CITY TRAFFIC COUNTERS
626.991.7522
www.ctcounters.com

File Name : WGroveGarvey_4Axle
Site Code : 00000000
Start Date : 4/29/2014
Page No : 3

	Walnut Grove Ave Southbound				Garvey Ave Westbound				Walnut Grove Ave Northbound				Garvey Ave Eastbound				
Start Time	Left	Thru	Right	App. Total	Left	Thru	Right	App. Total	Left	Thru	Right	App. Total	Left	Thru	Right	App. Total	Int. Total
Peak Hour Analysis From 12:00 PM to 05:45 PM - Peak 1 of 1																	
Peak Hour for Entire Intersection Begins at 04:00 PM																	
04:00 PM	0	0	0	0	0	0	0	0	**1**	**2**	0	**3**	0	0	0	0	**3**
04:15 PM	0	0	0	0	0	0	0	0	0	0	0	0	0	0	0	0	0
04:30 PM	0	0	0	0	0	0	0	0	0	0	0	0	0	**1**	0	**1**	1
04:45 PM	0	0	0	0	0	**1**	0	**1**	0	0	0	0	0	0	0	0	1
Total Volume	0	0	0	0	0	1	0	1	1	2	0	3	0	1	0	1	5
% App. Total	0	0	0		0	100	0		33.3	66.7	0		0	100	0		
PHF	.000	.000	.000	.000	.000	.250	.000	.250	.250	.250	.000	.250	.000	.250	.000	.250	.417

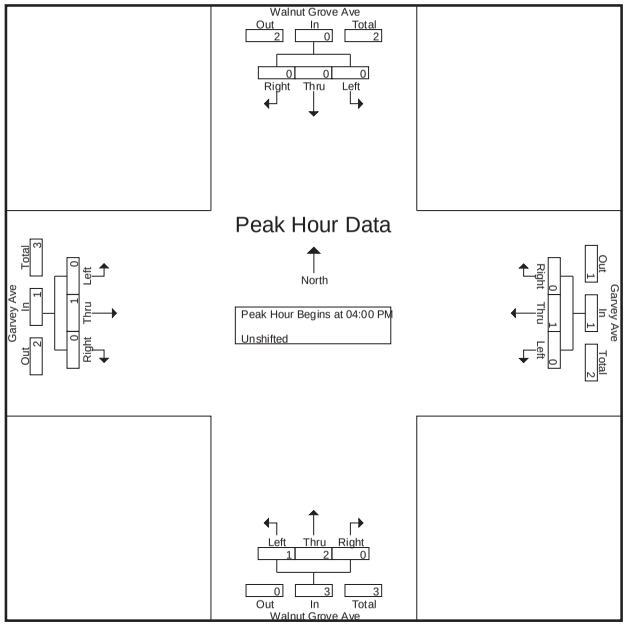

CITY TRAFFIC COUNTERS

626.991.7522

www.ctcounters.com

File Name : walnutgrove_garvey_sat
Site Code : 00000000
Start Date : 6/7/2014
Page No : 1

Groups Printed- Unshifted

	Walnut Grove Ave Southbound			Garvey Ave Westbound			Walnut Grove Ave Northbound			Garvey Ave Eastbound			
Start Time	Left	Thru	Right	Left	Thru	Right	Left	Thru	Right	Left	Thru	Right	Int. Total
12:00 PM	48	84	37	38	205	40	21	97	27	52	169	24	842
12:15 PM	54	122	35	28	183	28	20	106	18	36	161	31	822
12:30 PM	47	109	22	30	205	38	34	112	31	43	192	23	886
12:45 PM	46	133	30	28	161	43	23	90	28	31	179	22	814
Total	195	448	124	124	754	149	98	405	104	162	701	100	3364
01:00 PM	44	99	31	25	148	36	24	108	27	29	180	39	790
01:15 PM	48	106	21	24	184	23	31	109	31	34	173	24	808
01:30 PM	37	99	30	24	172	36	19	128	32	36	217	21	851
01:45 PM	40	104	28	25	148	37	23	100	32	45	216	27	825
Total	169	408	110	98	652	132	97	445	122	144	786	111	3274
Grand Total	364	856	234	222	1406	281	195	850	226	306	1487	211	6638
Apprch %	25	58.9	16.1	11.6	73.7	14.7	15.3	66.9	17.8	15.3	74.2	10.5	
Total %	5.5	12.9	3.5	3.3	21.2	4.2	2.9	12.8	3.4	4.6	22.4	3.2	

CITY TRAFFIC COUNTERS

626.991.7522

www.ctcounters.com

File Name : walnutgrove_garvey_sat
Site Code : 00000000
Start Date : 6/7/2014
Page No : 2

	Walnut Grove Ave Southbound				Garvey Ave Westbound				Walnut Grove Ave Northbound				Garvey Ave Eastbound				
Start Time	Left	Thru	Right	App. Total	Left	Thru	Right	App. Total	Left	Thru	Right	App. Total	Left	Thru	Right	App. Total	Int. Total
Peak Hour Analysis From 12:00 PM to 01:45 PM - Peak 1 of 1																	
Peak Hour for Entire Intersection Begins at 12:00 PM																	
12:00 PM	48	84	**37**	169	**38**	**205**	40	**283**	21	97	27	145	**52**	169	24	245	842
12:15 PM	**54**	122	35	**211**	28	183	28	239	20	106	18	144	36	161	**31**	228	822
12:30 PM	47	109	22	178	30	205	38	273	**34**	**112**	**31**	**177**	43	**192**	23	**258**	**886**
12:45 PM	46	**133**	30	209	28	161	**43**	232	23	90	28	141	31	179	22	232	814
Total Volume	195	448	124	767	124	754	149	1027	98	405	104	607	162	701	100	963	3364
% App. Total	25.4	58.4	16.2		12.1	73.4	14.5		16.1	66.7	17.1		16.8	72.8	10.4		
PHF	.903	.842	.838	.909	.816	.920	.866	.907	.721	.904	.839	.857	.779	.913	.806	.933	.949

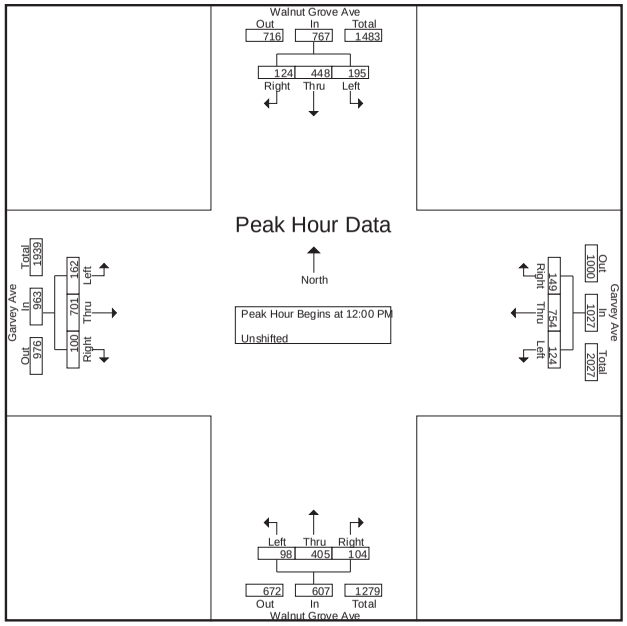

CITY TRAFFIC COUNTERS

626.991.7522

www.ctcounters.com

File Name : Rosemead_Valley
Site Code : 00000000
Start Date : 6/4/2014
Page No : 1

Groups Printed- Unshifted

	Rosemead Blvd Southbound			Valley Blvd Westbound			Rosemead Blvd Northbound			Valley Blvd Eastbound			
Start Time	Left	Thru	Right	Left	Thru	Right	Left	Thru	Right	Left	Thru	Right	Int. Total
07:00 AM	4	255	37	33	125	6	23	252	9	15	36	20	815
07:15 AM	4	310	43	47	120	8	45	281	17	23	42	16	956
07:30 AM	10	300	70	60	168	16	32	313	14	43	80	27	1133
07:45 AM	13	333	85	53	138	12	37	344	18	56	87	41	1217
Total	31	1198	235	193	551	42	137	1190	58	137	245	104	4121
08:00 AM	8	328	53	50	154	15	40	298	34	41	90	28	1139
08:15 AM	8	317	71	49	162	8	36	268	24	34	78	36	1091
08:30 AM	8	306	55	38	161	15	47	332	23	27	57	43	1112
08:45 AM	14	312	79	46	128	12	55	289	35	43	73	19	1105
Total	38	1263	258	183	605	50	178	1187	116	145	298	126	4447
04:00 PM	19	287	44	54	100	12	36	292	41	59	122	39	1105
04:15 PM	15	245	50	42	97	21	51	257	34	72	157	46	1087
04:30 PM	13	304	40	46	130	10	34	314	35	67	142	34	1169
04:45 PM	24	287	57	59	128	17	45	284	39	67	155	48	1210
Total	71	1123	191	201	455	60	166	1147	149	265	576	167	4571
05:00 PM	18	306	58	45	119	16	45	350	36	65	136	42	1236
05:15 PM	16	289	52	40	116	15	35	284	22	75	162	43	1149
05:30 PM	10	298	63	29	113	14	43	334	31	58	146	45	1184
05:45 PM	12	263	45	53	123	26	30	293	30	74	175	35	1159
Total	56	1156	218	167	471	71	153	1261	119	272	619	165	4728
Grand Total	196	4740	902	744	2082	223	634	4785	442	819	1738	562	17867
Apprch %	3.4	81.2	15.5	24.4	68.3	7.3	10.8	81.6	7.5	26.3	55.7	18	
Total %	1.1	26.5	5	4.2	11.7	1.2	3.5	26.8	2.5	4.6	9.7	3.1	

CITY TRAFFIC COUNTERS

626.991.7522

www.ctcounters.com

File Name : Rosemead_Valley
Site Code : 00000000
Start Date : 6/4/2014
Page No : 2

	Rosemead Blvd Southbound				Valley Blvd Westbound				Rosemead Blvd Northbound				Valley Blvd Eastbound				
Start Time	Left	Thru	Right	App. Total	Left	Thru	Right	App. Total	Left	Thru	Right	App. Total	Left	Thru	Right	App. Total	Int. Total
Peak Hour Analysis From 07:00 AM to 11:45 AM - Peak 1 of 1																	
Peak Hour for Entire Intersection Begins at 07:30 AM																	
07:30 AM	10	300	70	380	**60**	**168**	**16**	**244**	32	313	14	359	43	80	27	150	1133
07:45 AM	**13**	**333**	**85**	**431**	53	138	12	203	37	**344**	18	**399**	**56**	87	**41**	**184**	**1217**
08:00 AM	8	328	53	389	50	154	15	219	**40**	298	**34**	372	41	**90**	28	159	1139
08:15 AM	8	317	71	396	49	162	8	219	36	268	24	328	34	78	36	148	1091
Total Volume	39	1278	279	1596	212	622	51	885	145	1223	90	1458	174	335	132	641	4580
% App. Total	2.4	80.1	17.5		24	70.3	5.8		9.9	83.9	6.2		27.1	52.3	20.6		
PHF	.750	.959	.821	.926	.883	.926	.797	.907	.906	.889	.662	.914	.777	.931	.805	.871	.941

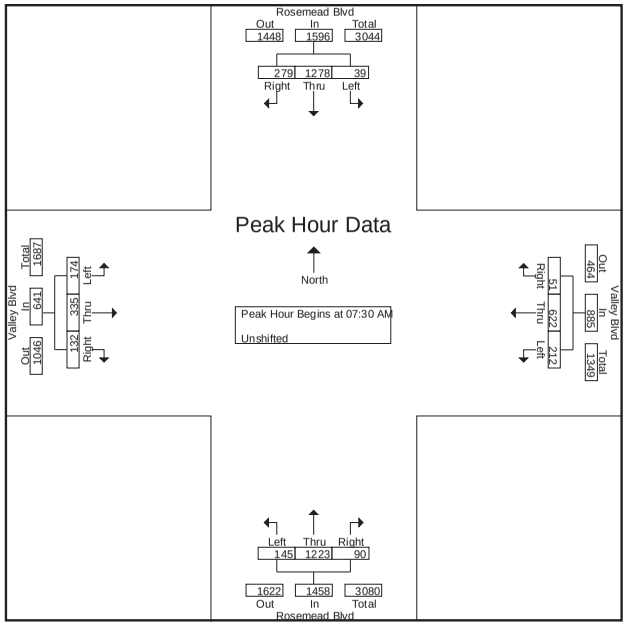

CITY TRAFFIC COUNTERS
626.991.7522
www.ctcounters.com

File Name : Rosemead_Valley
Site Code : 00000000
Start Date : 6/4/2014
Page No : 3

	Rosemead Blvd Southbound				Valley Blvd Westbound				Rosemead Blvd Northbound				Valley Blvd Eastbound				
Start Time	Left	Thru	Right	App. Total	Left	Thru	Right	App. Total	Left	Thru	Right	App. Total	Left	Thru	Right	App. Total	Int. Total
Peak Hour Analysis From 12:00 PM to 05:45 PM - Peak 1 of 1																	
Peak Hour for Entire Intersection Begins at 04:45 PM																	
04:45 PM	**24**	287	57	368	**59**	**128**	**17**	**204**	**45**	284	**39**	368	67	155	**48**	270	1210
05:00 PM	18	**306**	58	**382**	45	119	16	180	45	**350**	36	**431**	65	136	42	243	**1236**
05:15 PM	16	289	52	357	40	116	15	171	35	284	22	341	**75**	**162**	43	**280**	1149
05:30 PM	10	298	**63**	371	29	113	14	156	43	334	31	408	58	146	45	249	1184
Total Volume	68	1180	230	1478	173	476	62	711	168	1252	128	1548	265	599	178	1042	4779
% App. Total	4.6	79.8	15.6		24.3	66.9	8.7		10.9	80.9	8.3		25.4	57.5	17.1		
PHF	.708	.964	.913	.967	.733	.930	.912	.871	.933	.894	.821	.898	.883	.924	.927	.930	.967

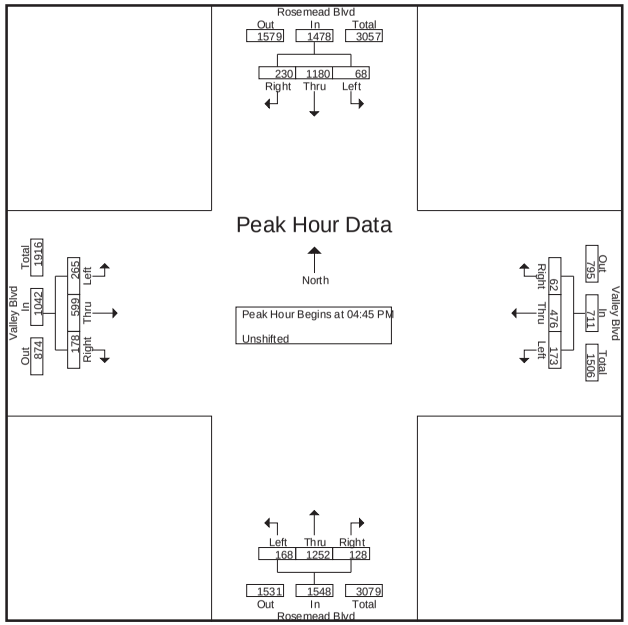

CITY TRAFFIC COUNTERS
626.991.7522
www.ctcounters.com

File Name : Rosemead_Valley_Sat
Site Code : 00000000
Start Date : 6/7/2014
Page No : 1

Groups Printed- Unshifted

	Rosemead Blvd Southbound			Valley Blvd Westbound			Rosemead Blvd Northbound			Valley Blvd Eastbound			
Start Time	Left	Thru	Right	Left	Thru	Right	Left	Thru	Right	Left	Thru	Right	Int. Total
12:00 PM	17	260	59	68	191	21	64	272	26	46	146	52	1222
12:15 PM	22	303	63	48	138	15	52	294	40	56	144	65	1240
12:30 PM	13	258	61	45	124	28	58	291	39	56	147	53	1173
12:45 PM	18	320	64	53	99	13	53	279	38	53	131	50	1171
Total	70	1141	247	214	552	77	227	1136	143	211	568	220	4806
01:00 PM	15	283	63	48	125	23	64	313	42	51	143	63	1233
01:15 PM	20	305	60	62	133	18	46	316	44	55	133	52	1244
01:30 PM	15	259	69	66	145	17	41	268	39	56	124	51	1150
01:45 PM	16	318	65	42	132	10	45	340	46	47	133	53	1247
Total	66	1165	257	218	535	68	196	1237	171	209	533	219	4874
Grand Total	136	2306	504	432	1087	145	423	2373	314	420	1101	439	9680
Apprch %	4.6	78.3	17.1	26	65.3	8.7	13.6	76.3	10.1	21.4	56.2	22.4	
Total %	1.4	23.8	5.2	4.5	11.2	1.5	4.4	24.5	3.2	4.3	11.4	4.5	

CITY TRAFFIC COUNTERS

626.991.7522

www.ctcounters.com

File Name : Rosemead_Valley_Sat
Site Code : 00000000
Start Date : 6/7/2014
Page No : 2

	Rosemead Blvd Southbound				Valley Blvd Westbound				Rosemead Blvd Northbound				Valley Blvd Eastbound				
Start Time	Left	Thru	Right	App. Total	Left	Thru	Right	App. Total	Left	Thru	Right	App. Total	Left	Thru	Right	App. Total	Int. Total
Peak Hour Analysis From 12:00 PM to 01:45 PM - Peak 1 of 1																	
Peak Hour for Entire Intersection Begins at 01:00 PM																	
01:00 PM	15	283	63	361	48	125	**23**	196	**64**	313	42	419	51	**143**	**63**	**257**	1233
01:15 PM	**20**	305	60	385	62	133	18	213	46	316	44	406	55	133	52	240	1244
01:30 PM	15	259	**69**	343	**66**	**145**	17	**228**	41	268	39	348	**56**	124	51	231	1150
01:45 PM	16	**318**	65	**399**	42	132	10	184	45	**340**	**46**	**431**	47	133	53	233	**1247**
Total Volume	66	1165	257	1488	218	535	68	821	196	1237	171	1604	209	533	219	961	4874
% App. Total	4.4	78.3	17.3		26.6	65.2	8.3		12.2	77.1	10.7		21.7	55.5	22.8		
PHF	.825	.916	.931	.932	.826	.922	.739	.900	.766	.910	.929	.930	.933	.932	.869	.935	.977

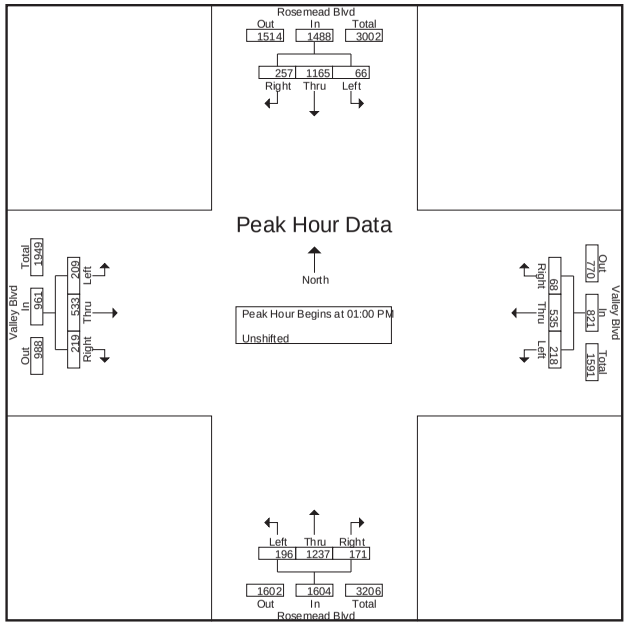

INTERSECTION TURNING MOVEMENT COUNT SUMMARY

CLIENT: LLG - PASADENA
PROJECT: FLAIR SPECTRUM - CITY OF EL MONTE
DATE: THURSDAY, JUNE 05, 2014
PERIOD: 07:00 AM TO 09:00 AM
INTERSECTION: N/S ROSEMEAD BOULEVARD
E/W GLENDON WAY / I-10 WB RAMPS
FILE NUMBER: 1-AM

15-MIN PERIOD:	SB ROSEMEAD BLVD			WB GLENDON WAY FROM SHOPPING CENTER				WB GLENDON WAY FROM 10 WB					NB ROSEMEAD BLVD				EB GLENDON WAY FROM GLENDON WAY			FROM 10 WB RAMP		
	SBRT		SBTH	WBRT	WBTH		WBLT	WBRT	WBTH		WBLT	NBRT	NBRT	NBTH	NBLT		EBRT	TO ROSEMEAD		TO ROSEMEAD		EBLT
	10 WB	GLENDON			10 WB	GLENDON			10 WB	GLENDON					10 WB	GLENDON	10 WB	EBRT	EBLT	EBRT	EBLT	GLENDON
	1	2	3	4	5	6	7	8	9	10	11	12	13	14	15	16	17	18	19	20	21	22
0700-0715	79	3	211	0	4	0	2	46	0	3	5	11	47	320	2	8	3	22	3	82	0	13
0715-0730	65	3	305	3	6	0	5	62	1	2	14	8	53	345	1	10	2	33	2	88	1	28
0730-0745	65	3	360	1	5	1	5	59	1	3	8	16	59	332	0	19	2	41	2	124	1	35
0745-0800	58	8	344	4	2	1	7	60	2	5	5	29	57	405	2	23	5	60	3	196	0	26
0800-0815	91	7	358	2	3	0	8	44	1	2	4	23	72	421	2	16	7	46	4	142	0	15
0815-0830	61	4	432	2	4	1	14	56	0	4	8	15	55	399	0	22	3	51	3	96	0	14
0830-0845	65	2	426	4	3	2	12	53	2	5	9	16	73	407	0	24	6	30	3	87	2	14
0845-0900	84	4	437	4	4	2	16	47	0	7	10	14	69	415	2	22	4	33	7	69	0	19

1-HOUR PERIOD:	SB ROSEMEAD BLVD			WB GLENDON WAY FROM SHOPPING CENTER				WB GLENDON WAY FROM 10 WB					NB ROSEMEAD BLVD				EB GLENDON WAY FROM GLENDON WAY			FROM 10 WB RAMP			
	SBRT		SBTH	WBRT	WBTH		WBLT	WBRT	WBTH		WBLT	NBRT	NBRT	NBTH	NBLT		EBRT	TO ROSEMEAD		TO ROSEMEAD		EBLT	
	10 WB	GLENDON			10 WB	GLENDON			10 WB	GLENDON					10 WB	GLENDON	10 WB	EBRT	EBLT	EBRT	EBLT	GLENDON	
	1	2	3	4	5	6	7	8	9	10	11	12	13	14	15	16	17	18	19	20	21	22	TOTALS
0700-0800	267	17	1220	8	17	2	19	227	4	13	32	64	216	1402	5	60	12	156	10	490	2	102	4078
0715-0815	279	21	1367	10	16	2	25	225	5	12	31	76	241	1503	5	68	16	180	11	550	2	104	4470
0730-0830	275	22	1494	9	14	3	34	219	4	14	25	83	243	1557	4	80	17	198	12	558	1	90	4681
0745-0845	275	21	1560	12	12	4	41	213	5	16	26	83	257	1632	4	85	21	187	13	521	2	69	4784
0800-0900	301	17	1653	12	14	5	50	200	3	18	31	68	269	1642	4	84	20	160	17	394	2	62	4725

INTERSECTION TURNING MOVEMENT COUNT SUMMARY

CLIENT: LLG - PASADENA
PROJECT: FLAIR SPECTRUM - CITY OF EL MONTE
DATE: THURSDAY, JUNE 05, 2014
PERIOD: 04:00 PM TO 06:00 PM
INTERSECTION: N/S ROSEMEAD BOULEVARD
E/W GLENDON WAY / I-10 WB RAMPS
FILE NUMBER: 1-PM

	SB ROSEMEAD BLVD			WB GLENDON WAY FROM SHOPPING CENTER				WB GLENDON WAY FROM 10 WB					NB ROSEMEAD BLVD				EB GLENDON WAY FROM GLENDON WAY			FROM 10 WB RAMP		
15-MIN	SBRT		SBTH	WBRT	WBTH		WBLT	WBRT	WBTH		WBLT	NBRT	NBRT	NBTH	NBLT		EBRT	TO ROSEMEAD		TO ROSEMEAD		EBLT
PERIOD:	10 WB	GLENDON			10 WB	GLENDON			10 WB	GLENDON					10 WB	GLENDON	10 WB	EBRT	EBLT	EBRT	EBLT	GLENDON
	1	2	3	4	5	6	7	8	9	10	11	12	13	14	15	16	17	18	19	20	21	22
0400-0415	95	9	284	8	4	0	23	57	0	0	4	31	149	457	2	13	2	21	8	60	0	16
0415-0430	94	7	350	7	7	1	14	38	1	1	4	32	134	411	5	25	4	23	6	72	1	12
0430-0445	106	5	325	15	12	2	26	50	2	2	9	50	159	408	6	26	5	15	9	60	0	23
0445-0500	78	4	286	8	8	4	20	52	0	4	9	39	150	440	8	29	5	20	5	69	1	27
0500-0515	90	8	291	9	12	2	30	46	1	3	4	33	153	506	10	23	6	28	5	41	1	27
0515-0530	115	11	289	5	9	4	20	40	1	5	6	47	184	567	19	31	7	23	8	48	2	36
0530-0545	102	8	325	9	17	4	28	57	2	7	9	51	154	518	8	30	13	38	3	55	1	45
0545-0600	95	13	270	13	10	4	23	71	1	10	5	41	154	496	10	28	8	23	3	45	1	23

	SB ROSEMEAD BLVD			WB GLENDON WAY FROM SHOPPING CENTER				WB GLENDON WAY FROM 10 WB					NB ROSEMEAD BLVD				EB GLENDON WAY FROM GLENDON WAY			FROM 10 WB RAMP			
1-HOUR	SBRT		SBTH	WBRT	WBTH		WBLT	WBRT	WBTH		WBLT	NBRT	NBRT	NBTH	NBLT		EBRT	TO ROSEMEAD		TO ROSEMEAD		EBLT	
PERIOD:	10 WB	GLENDON			10 WB	GLENDON			10 WB	GLENDON					10 WB	GLENDON	10 WB	EBRT	EBLT	EBRT	EBLT	GLENDON	
	1	2	3	4	5	6	7	8	9	10	11	12	13	14	15	16	17	18	19	20	21	22	TOTALS
0400-0500	373	25	1245	38	31	7	83	197	3	7	26	152	592	1716	21	93	16	79	28	261	2	78	5073
0415-0515	368	24	1252	39	39	9	90	186	4	10	26	154	596	1765	29	103	20	86	25	242	3	89	5159
0430-0530	389	28	1191	37	41	12	96	188	4	14	28	169	646	1921	43	109	23	86	27	218	4	113	5387
0445-0545	385	31	1191	31	46	14	98	195	4	19	28	170	641	2031	45	113	31	109	21	213	5	135	5556
0500-0600	402	40	1175	36	48	14	101	214	5	25	24	172	645	2087	47	112	34	112	19	189	5	131	5637

INTERSECTION TURNING MOVEMENT COUNT SUMMARY

CLIENT: LLG - PASADENA
PROJECT: FLAIR SPECTRUM - CITY OF EL MONTE
DATE: SATURDAY, JUNE 07, 2014
PERIOD: 12:00 NOON TO 02:00 PM
INTERSECTION: N/S ROSEMEAD BOULEVARD
E/W GLENDON WAY / I-10 WB RAMPS
FILE NUMBER: 1-MD

	SB ROSEMEAD BLVD			WB GLENDON WAY FROM SHOPPING CENTER				WB GLENDON WAY FROM 10 WB					NB ROSEMEAD BLVD				EB GLENDON WAY FROM GLENDON WAY			FROM 10 WB RAMP		
15-MIN	SBRT		SBTH	WBRT	WBTH		WBLT	WBRT	WBTH		WBLT	NBRT	NBRT	NBTH	NBLT		EBRT	TO ROSEMEAD		TO ROSEMEAD		EBLT
PERIOD:	10 WB	GLENDON			10 WB	GLENDON			10 WB	GLENDON					10 WB	GLENDON	10 WB	EBRT	EBLT	EBRT	EBLT	GLENDON
	1	2	3	4	5	6	7	8	9	10	11	12	13	14	15	16	17	18	19	20	21	22
1200-1215	102	8	290	10	5	3	30	40	4	15	15	31	107	377	13	49	5	22	8	93	2	15
1215-1230	98	10	291	9	3	2	25	52	5	11	11	33	101	398	9	30	7	25	10	77	1	17
1230-1245	133	11	327	9	8	4	28	51	3	5	9	34	114	421	5	31	7	36	7	66	1	17
1245-0100	109	13	357	11	7	3	32	46	4	6	11	42	119	408	9	28	10	35	5	62	5	17
0100-0115	120	8	281	14	6	3	35	66	4	5	12	31	119	446	4	29	10	27	9	57	2	13
0115-0130	141	5	340	14	11	4	27	49	6	8	8	41	120	410	7	25	12	16	5	73	1	15
0130-0145	118	8	317	11	10	3	18	46	4	5	8	30	114	420	5	33	5	24	7	64	1	19
0145-0200	117	7	300	15	8	3	19	55	5	13	14	31	99	381	3	22	5	23	10	84	4	16

	SB ROSEMEAD BLVD			WB GLENDON WAY FROM SHOPPING CENTER				WB GLENDON WAY FROM 10 WB					NB ROSEMEAD BLVD				EB GLENDON WAY FROM GLENDON WAY			FROM 10 WB RAMP			
1-HOUR	SBRT		SBTH	WBRT	WBTH		WBLT	WBRT	WBTH		WBLT	NBRT	NBRT	NBTH	NBLT		EBRT	TO ROSEMEAD		TO ROSEMEAD		EBLT	
PERIOD:	10 WB	GLENDON			10 WB	GLENDON			10 WB	GLENDON					10 WB	GLENDON	10 WB	EBRT	EBLT	EBRT	EBLT	GLENDON	
	1	2	3	4	5	6	7	8	9	10	11	12	13	14	15	16	17	18	19	20	21	22	TOTALS
1200-0100	442	42	1265	39	23	12	115	189	16	37	46	140	441	1604	36	138	29	118	30	298	9	66	4693
1215-0115	460	42	1256	43	24	12	120	215	16	27	43	140	453	1673	27	118	34	123	31	262	9	64	4732
1230-0130	503	37	1305	48	32	14	122	212	17	24	40	148	472	1685	25	113	39	114	26	258	9	62	4802
1245-0145	488	34	1295	50	34	13	112	207	18	24	39	144	472	1684	25	115	37	102	26	256	9	64	4760
0100-0200	496	28	1238	54	35	13	99	216	19	31	42	133	452	1657	19	109	32	90	31	278	8	63	4647

CITY TRAFFIC COUNTERS

626.991.7522

www.ctcounters.com

File Name : Rosemead_10EB
Site Code : 00000000
Start Date : 6/5/2014
Page No : 1

Groups Printed- Unshifted

	Rosemead Blvd Southbound			I-10 EB Ramps Westbound			Rosemead Blvd Northbound			I-10 EB Ramps Eastbound			
Start Time	Left	Thru	Right	Left	Thru	Right	Left	Thru	Right	Left	Thru	Right	Int. Total
07:00 AM	0	0	75	0	0	76	0	0	28	0	0	104	283
07:15 AM	0	0	95	0	0	81	0	0	36	0	0	117	329
07:30 AM	0	0	134	0	0	97	0	0	60	0	0	159	450
07:45 AM	0	0	171	0	0	104	0	0	68	0	0	137	480
Total	0	0	475	0	0	358	0	0	192	0	0	517	1542
08:00 AM	0	0	161	0	0	107	0	0	57	0	0	167	492
08:15 AM	0	0	160	0	0	94	0	0	53	0	0	147	454
08:30 AM	0	0	115	0	0	64	0	0	64	0	0	109	352
08:45 AM	0	0	90	0	0	68	0	0	50	0	0	84	292
Total	0	0	526	0	0	333	0	0	224	0	0	507	1590
04:00 PM	0	0	55	0	0	112	0	0	57	0	0	137	361
04:15 PM	0	0	66	0	0	116	0	0	42	0	0	140	364
04:30 PM	0	0	47	0	0	117	0	0	65	0	0	126	355
04:45 PM	0	0	60	0	0	118	0	0	49	0	0	144	371
Total	0	0	228	0	0	463	0	0	213	0	0	547	1451
05:00 PM	0	0	59	0	0	161	0	0	70	0	0	130	420
05:15 PM	0	0	58	0	0	142	0	0	57	0	0	148	405
05:30 PM	0	0	75	0	0	122	0	0	55	0	0	113	365
05:45 PM	0	0	54	0	0	117	0	0	67	0	0	125	363
Total	0	0	246	0	0	542	0	0	249	0	0	516	1553
Grand Total	0	0	1475	0	0	1696	0	0	878	0	0	2087	6136
Apprch %	0	0	100	0	0	100	0	0	100	0	0	100	
Total %	0	0	24	0	0	27.6	0	0	14.3	0	0	34	

CITY TRAFFIC COUNTERS

626.991.7522

www.ctcounters.com

File Name : Rosemead_10EB
Site Code : 00000000
Start Date : 6/5/2014
Page No : 2

	Rosemead Blvd Southbound				I-10 EB Ramps Westbound				Rosemead Blvd Northbound				I-10 EB Ramps Eastbound				
Start Time	Left	Thru	Right	App. Total	Left	Thru	Right	App. Total	Left	Thru	Right	App. Total	Left	Thru	Right	App. Total	Int. Total
Peak Hour Analysis From 07:00 AM to 11:45 AM - Peak 1 of 1																	
Peak Hour for Entire Intersection Begins at 07:30 AM																	
07:30 AM	0	0	134	134	0	0	97	97	0	0	60	60	0	0	159	159	450
07:45 AM	0	0	**171**	**171**	0	0	104	104	0	0	**68**	**68**	0	0	137	137	480
08:00 AM	0	0	161	161	0	0	**107**	**107**	0	0	57	57	0	0	**167**	**167**	**492**
08:15 AM	0	0	160	160	0	0	94	94	0	0	53	53	0	0	147	147	454
Total Volume	0	0	626	626	0	0	402	402	0	0	238	238	0	0	610	610	1876
% App. Total	0	0	100		0	0	100		0	0	100		0	0	100		
PHF	.000	.000	.915	.915	.000	.000	.939	.939	.000	.000	.875	.875	.000	.000	.913	.913	.953

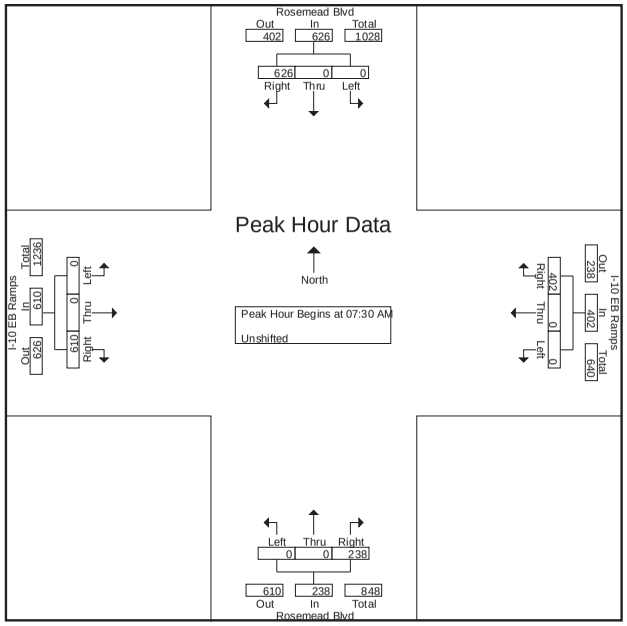

CITY TRAFFIC COUNTERS
626.991.7522
www.ctcounters.com

File Name : Rosemead_10EB
Site Code : 00000000
Start Date : 6/5/2014
Page No : 3

	Rosemead Blvd Southbound				I-10 EB Ramps Westbound				Rosemead Blvd Northbound				I-10 EB Ramps Eastbound				
Start Time	Left	Thru	Right	App. Total	Left	Thru	Right	App. Total	Left	Thru	Right	App. Total	Left	Thru	Right	App. Total	Int. Total
Peak Hour Analysis From 12:00 PM to 05:45 PM - Peak 1 of 1																	
Peak Hour for Entire Intersection Begins at 04:45 PM																	
04:45 PM	0	0	60	60	0	0	118	118	0	0	49	49	0	0	144	144	371
05:00 PM	0	0	59	59	0	0	**161**	**161**	0	0	**70**	**70**	0	0	130	130	**420**
05:15 PM	0	0	58	58	0	0	142	142	0	0	57	57	0	0	**148**	**148**	405
05:30 PM	0	0	**75**	**75**	0	0	122	122	0	0	55	55	0	0	113	113	365
Total Volume	0	0	252	252	0	0	543	543	0	0	231	231	0	0	535	535	1561
% App. Total	0	0	100		0	0	100		0	0	100		0	0	100		
PHF	.000	.000	.840	.840	.000	.000	.843	.843	.000	.000	.825	.825	.000	.000	.904	.904	.929

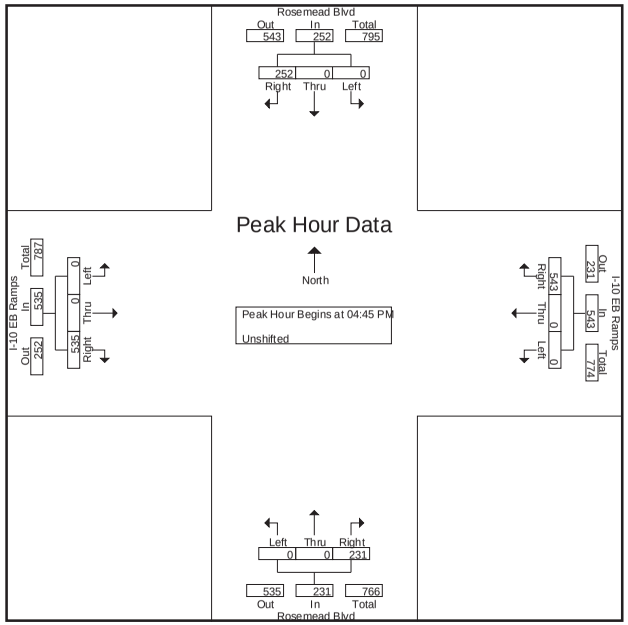

CITY TRAFFIC COUNTERS
626.991.7522
www.ctcounters.com

File Name : Rosemead_10FrwyEBon-off_Sat
Site Code : 00000000
Start Date : 6/7/2014
Page No : 1

Groups Printed- Unshifted

	Rosemead Blvd Southbound			I-10 Frwy On/Off Ramps Westbound			Rosemead Blvd Northbound			I-10 Frwy On/Off Ramps Eastbound			
Start Time	Left	Thru	Right	Left	Thru	Right	Left	Thru	Right	Left	Thru	Right	Int. Total
12:00 PM	0	0	68	0	0	152	0	0	74	0	0	104	398
12:15 PM	0	0	88	0	0	93	0	0	61	0	0	96	338
12:30 PM	0	0	86	0	0	116	0	0	71	0	0	89	362
12:45 PM	0	0	68	0	0	140	0	0	78	0	0	106	392
Total	0	0	310	0	0	501	0	0	284	0	0	395	1490
01:00 PM	0	0	91	0	0	129	0	0	77	0	0	78	375
01:15 PM	0	0	84	0	0	117	0	0	80	0	0	96	377
01:30 PM	0	0	93	0	0	99	0	0	105	0	0	93	390
01:45 PM	0	0	82	0	0	114	0	0	73	0	0	90	359
Total	0	0	350	0	0	459	0	0	335	0	0	357	1501
Grand Total	0	0	660	0	0	960	0	0	619	0	0	752	2991
Apprch %	0	0	100	0	0	100	0	0	100	0	0	100	
Total %	0	0	22.1	0	0	32.1	0	0	20.7	0	0	25.1	

CITY TRAFFIC COUNTERS
626.991.7522
www.ctcounters.com

File Name : Rosemead_10FrwyEBon-off_Sat
Site Code : 00000000
Start Date : 6/7/2014
Page No : 2

	Rosemead Blvd Southbound				I-10 Frwy On/Off Ramps Westbound				Rosemead Blvd Northbound				I-10 Frwy On/Off Ramps Eastbound				
Start Time	Left	Thru	Right	App. Total	Left	Thru	Right	App. Total	Left	Thru	Right	App. Total	Left	Thru	Right	App. Total	Int. Total
Peak Hour Analysis From 12:00 PM to 01:45 PM - Peak 1 of 1																	
Peak Hour for Entire Intersection Begins at 12:45 PM																	
12:45 PM	0	0	68	68	0	0	**140**	**140**	0	0	78	78	0	0	**106**	**106**	**392**
01:00 PM	0	0	91	91	0	0	129	129	0	0	77	77	0	0	78	78	375
01:15 PM	0	0	84	84	0	0	117	117	0	0	80	80	0	0	96	96	377
01:30 PM	0	0	**93**	**93**	0	0	99	99	0	0	**105**	**105**	0	0	93	93	390
Total Volume	0	0	336	336	0	0	485	485	0	0	340	340	0	0	373	373	1534
% App. Total	0	0	100		0	0	100		0	0	100		0	0	100		
PHF	.000	.000	.903	.903	.000	.000	.866	.866	.000	.000	.810	.810	.000	.000	.880	.880	.978

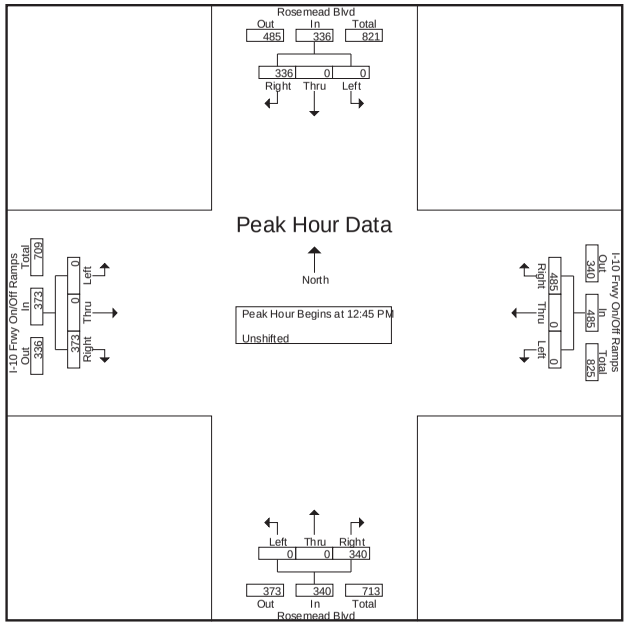

INTERSECTION TURNING MOVEMENT COUNT SUMMARY

CLIENT: LLG - PASADENA
PROJECT: FLAIR SPECTRUM - CITY OF EL MONTE
DATE: WEDNESDAY, JUNE 04, 2014
PERIOD: 07:00 AM TO 09:00 AM
INTERSECTION N/S ROSEMEAD BOULEVARD
E/W TELSTAR AVENUE
FILE NUMBER: 3-AM

15 MINUTE TOTALS	1 SBRT	2 SBTH	3 SBLT	4 WBRT	5 WBTH	6 WBLT	7 NBRT	8 NBTH	9 NBLT	10 EBRT	11 EBTH	12 EBLT
0700-0715	0	400	63	31	0	21	99	300	0	0	0	0
0715-0730	0	357	45	30	0	29	72	307	0	0	0	0
0730-0745	0	433	57	29	0	20	91	322	0	0	0	0
0745-0800	0	550	65	31	0	32	129	413	0	0	0	0
0800-0815	0	615	100	50	0	49	179	429	0	0	0	0
0815-0830	0	560	100	56	0	26	130	390	0	0	0	0
0830-0845	0	520	105	58	0	39	145	364	0	0	0	0
0845-0900	0	500	95	60	0	32	135	375	0	0	0	0

1 HOUR TOTALS	1 SBRT	2 SBTH	3 SBLT	4 WBRT	5 WBTH	6 WBLT	7 NBRT	8 NBTH	9 NBLT	10 EBRT	11 EBTH	12 EBLT	TOTALS
0700-0800	0	1740	230	121	0	102	391	1342	0	0	0	0	3926
0715-0815	0	1955	267	140	0	130	471	1471	0	0	0	0	4434
0730-0830	0	2158	322	166	0	127	529	1554	0	0	0	0	4856
0745-0845	0	2245	370	195	0	146	583	1596	0	0	0	0	5135
0800-0900	0	2195	400	224	0	146	589	1558	0	0	0	0	5112

A.M. PEAK HOUR
0745-0845

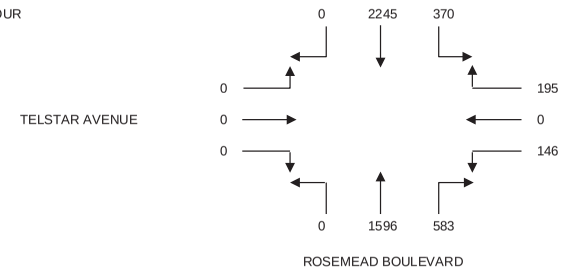

DATA PROVIDED BY:

THE TRAFFIC SOLUTION
329 DIAMOND STREET
ARCADIA, CALIFORNIA 91005
PH: 626-446-7978
FAX: 626-446-2877
.

INTERSECTION TURNING MOVEMENT COUNT SUMMARY

CLIENT: LLG - PASADENA
PROJECT: FLAIR SPECTRUM - CITY OF EL MONTE
DATE: WEDNESDAY, JUNE 04, 2014
PERIOD: 04:00 PM TO 06:00 PM
INTERSECTION N/S ROSEMEAD BOULEVARD
E/W TELSTAR AVENUE
FILE NUMBER: 3-PM

15 MINUTE TOTALS	1 SBRT	2 SBTH	3 SBLT	4 WBRT	5 WBTH	6 WBLT	7 NBRT	8 NBTH	9 NBLT	10 EBRT	11 EBTH	12 EBLT
0400-0415	0	475	55	137	0	88	38	469	0	0	0	0
0415-0430	0	413	32	135	0	72	28	303	0	0	0	0
0430-0445	0	468	44	163	0	82	29	300	0	0	0	0
0445-0500	0	470	41	198	0	110	40	499	0	0	0	0
0500-0515	0	432	48	197	0	105	32	347	0	0	0	0
0515-0530	0	404	28	210	0	101	34	515	0	0	0	0
0530-0545	0	399	24	209	0	91	31	422	0	0	0	0
0545-0600	0	439	43	194	0	82	23	442	0	0	0	0

1 HOUR TOTALS	1 SBRT	2 SBTH	3 SBLT	4 WBRT	5 WBTH	6 WBLT	7 NBRT	8 NBTH	9 NBLT	10 EBRT	11 EBTH	12 EBLT	TOTALS
0400-0500	0	1826	172	633	0	352	135	1571	0	0	0	0	4689
0415-0515	0	1783	165	693	0	369	129	1449	0	0	0	0	4588
0430-0530	0	1774	161	768	0	398	135	1661	0	0	0	0	4897
0445-0545	0	1705	141	814	0	407	137	1783	0	0	0	0	4987
0500-0600	0	1674	143	810	0	379	120	1726	0	0	0	0	4852

P.M. PEAK HOUR
0445-0545

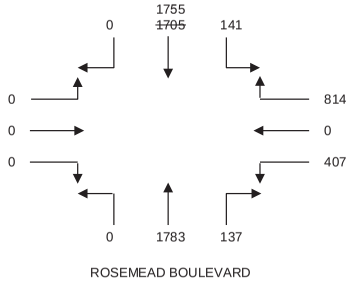

DATA PROVIDED BY:

THE TRAFFIC SOLUTION
329 DIAMOND STREET
ARCADIA, CALIFORNIA 91005
PH: 626-446-7978
FAX: 626-446-2877
.

INTERSECTION TURNING MOVEMENT COUNT SUMMARY

CLIENT: LLG - PASADENA
PROJECT: FLAIR SPECTRUM - CITY OF EL MONTE
DATE: SATURDAY, JUNE 07, 2014
PERIOD: 12:00 PM TO 02:00 PM
INTERSECTION N/S ROSEMEAD BOULEVARD
E/W TELSTAR AVENUE
FILE NUMBER: 3-MD

15 MINUTE TOTALS	1 SBRT	2 SBTH	3 SBLT	4 WBRT	5 WBTH	6 WBLT	7 NBRT	8 NBTH	9 NBLT	10 EBRT	11 EBTH	12 EBLT
1200-1215	0	333	22	51	0	25	20	407	0	0	0	0
1215-1230	0	347	18	37	0	24	35	445	0	0	0	0
1230-1245	0	395	28	40	0	41	20	453	0	0	0	0
1245-0100	0	465	35	47	0	44	21	457	0	0	0	0
0100-0115	0	349	31	49	0	43	24	480	0	0	0	0
0115-0130	0	358	23	47	0	33	18	446	0	0	0	0
0130-0145	0	392	29	22	0	26	21	434	0	0	0	0
0145-0200	0	396	39	17	0	18	22	452	0	0	0	0

1 HOUR TOTALS	1 SBRT	2 SBTH	3 SBLT	4 WBRT	5 WBTH	6 WBLT	7 NBRT	8 NBTH	9 NBLT	10 EBRT	11 EBTH	12 EBLT	TOTALS
1200-0100	0	1540	103	175	0	134	96	1762	0	0	0	0	3810
1215-0115	0	1556	112	173	0	152	100	1835	0	0	0	0	3928
1230-0130	0	1567	117	183	0	161	83	1836	0	0	0	0	3947
1245-0145	0	1564	118	165	0	146	84	1817	0	0	0	0	3894
0100-0200	0	1495	122	135	0	120	85	1812	0	0	0	0	3769

M.D. PEAK HOUR
1230-0130

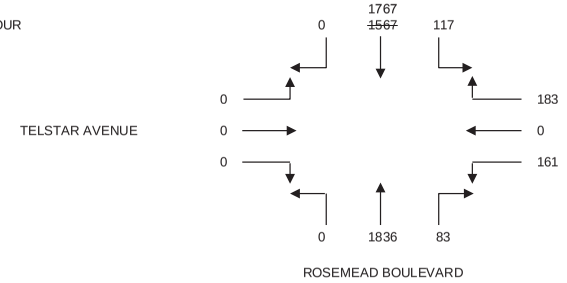

DATA PROVIDED BY:

THE TRAFFIC SOLUTION
329 DIAMOND STREET
ARCADIA, CALIFORNIA 91005
PH: 626-446-7978
FAX: 626-446-2877
.

CITY TRAFFIC COUNTERS

626.991.7522

www.ctcounters.com

File Name : Rosemead_Whitmore
Site Code : 00000000
Start Date : 6/5/2014
Page No : 1

Groups Printed- Unshifted

	Rosemead Blvd Southbound			Whitmore St Westbound			Rosemead Blvd Northbound			Whitmore St Eastbound			
Start Time	Left	Thru	Right	Left	Thru	Right	Left	Thru	Right	Left	Thru	Right	Int. Total
07:00 AM	10	394	0	0	0	3	0	361	32	0	0	0	800
07:15 AM	6	438	0	2	0	2	0	463	34	0	0	0	945
07:30 AM	26	479	0	6	0	2	0	524	31	0	0	0	1068
07:45 AM	14	544	0	5	0	2	0	495	51	0	0	0	1111
Total	56	1855	0	13	0	9	0	1843	148	0	0	0	3924
08:00 AM	28	509	0	6	0	4	0	484	115	0	0	0	1146
08:15 AM	31	467	0	12	0	4	0	465	46	0	0	0	1025
08:30 AM	19	516	0	12	0	4	0	503	30	0	0	0	1084
08:45 AM	16	506	0	10	0	11	0	498	44	0	0	0	1085
Total	94	1998	0	40	0	23	0	1950	235	0	0	0	4340
04:00 PM	3	519	0	29	0	12	0	437	13	0	0	0	1013
04:15 PM	1	546	0	38	0	15	0	413	14	0	0	0	1027
04:30 PM	2	548	0	63	0	12	0	378	14	0	0	0	1017
04:45 PM	1	550	0	70	0	16	0	390	6	0	0	0	1033
Total	7	2163	0	200	0	55	0	1618	47	0	0	0	4090
05:00 PM	1	519	0	89	0	19	0	395	7	0	0	0	1030
05:15 PM	1	502	0	63	0	7	0	389	6	0	0	0	968
05:30 PM	2	455	0	54	0	13	0	358	11	0	0	0	893
05:45 PM	2	560	0	33	0	9	0	402	14	0	0	0	1020
Total	6	2036	0	239	0	48	0	1544	38	0	0	0	3911
Grand Total	163	8052	0	492	0	135	0	6955	468	0	0	0	16265
Apprch %	2	98	0	78.5	0	21.5	0	93.7	6.3	0	0	0	
Total %	1	49.5	0	3	0	0.8	0	42.8	2.9	0	0	0	

CITY TRAFFIC COUNTERS

626.991.7522

www.ctcounters.com

File Name : Rosemead_Whitmore
Site Code : 00000000
Start Date : 6/5/2014
Page No : 2

	Rosemead Blvd Southbound				Whitmore St Westbound				Rosemead Blvd Northbound				Whitmore St Eastbound				
Start Time	Left	Thru	Right	App. Total	Left	Thru	Right	App. Total	Left	Thru	Right	App. Total	Left	Thru	Right	App. Total	Int. Total
Peak Hour Analysis From 07:00 AM to 11:45 AM - Peak 1 of 1																	
Peak Hour for Entire Intersection Begins at 07:45 AM																	
07:45 AM	14	**544**	0	**558**	5	0	2	7	0	495	51	546	0	0	0	0	1111
08:00 AM	28	509	0	537	6	0	**4**	10	0	484	**115**	**599**	0	0	0	0	**1146**
08:15 AM	**31**	467	0	498	**12**	0	4	**16**	0	465	46	511	0	0	0	0	1025
08:30 AM	19	516	0	535	12	0	4	16	0	**503**	30	533	0	0	0	0	1084
Total Volume	92	2036	0	2128	35	0	14	49	0	1947	242	2189	0	0	0	0	4366
% App. Total	4.3	95.7	0		71.4	0	28.6		0	88.9	11.1		0	0	0		
PHF	.742	.936	.000	.953	.729	.000	.875	.766	.000	.968	.526	.914	.000	.000	.000	.000	.952

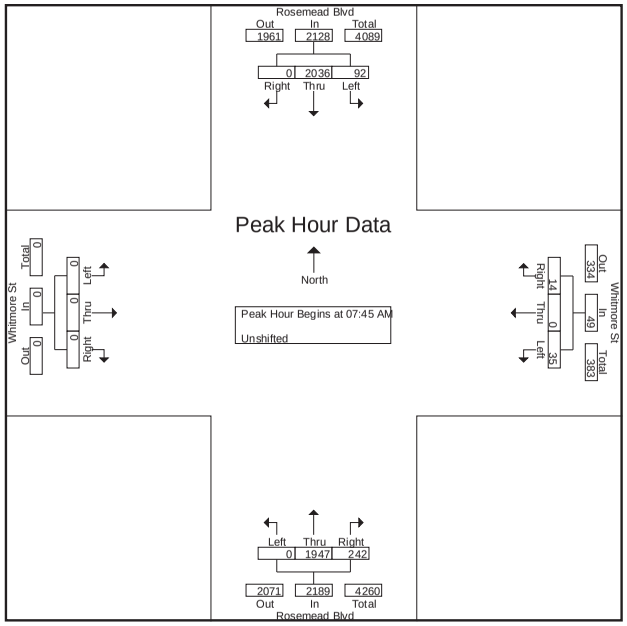

CITY TRAFFIC COUNTERS
626.991.7522
www.ctcounters.com

File Name : Rosemead_Whitmore
Site Code : 00000000
Start Date : 6/5/2014
Page No : 3

	Rosemead Blvd Southbound				Whitmore St Westbound				Rosemead Blvd Northbound				Whitmore St Eastbound				
Start Time	Left	Thru	Right	App. Total	Left	Thru	Right	App. Total	Left	Thru	Right	App. Total	Left	Thru	Right	App. Total	Int. Total
Peak Hour Analysis From 12:00 PM to 05:45 PM - Peak 1 of 1																	
Peak Hour for Entire Intersection Begins at 04:15 PM																	
04:15 PM	1	546	0	547	38	0	15	53	0	**413**	**14**	**427**	0	0	0	0	1027
04:30 PM	**2**	548	0	550	63	0	12	75	0	378	14	392	0	0	0	0	1017
04:45 PM	1	**550**	0	**551**	70	0	16	86	0	390	6	396	0	0	0	0	**1033**
05:00 PM	1	519	0	520	**89**	0	**19**	**108**	0	395	7	402	0	0	0	0	1030
Total Volume	5	2163	0	2168	260	0	62	322	0	1576	41	1617	0	0	0	0	4107
% App. Total	0.2	99.8	0		80.7	0	19.3		0	97.5	2.5		0	0	0		
PHF	.625	.983	.000	.984	.730	.000	.816	.745	.000	.954	.732	.947	.000	.000	.000	.000	.994

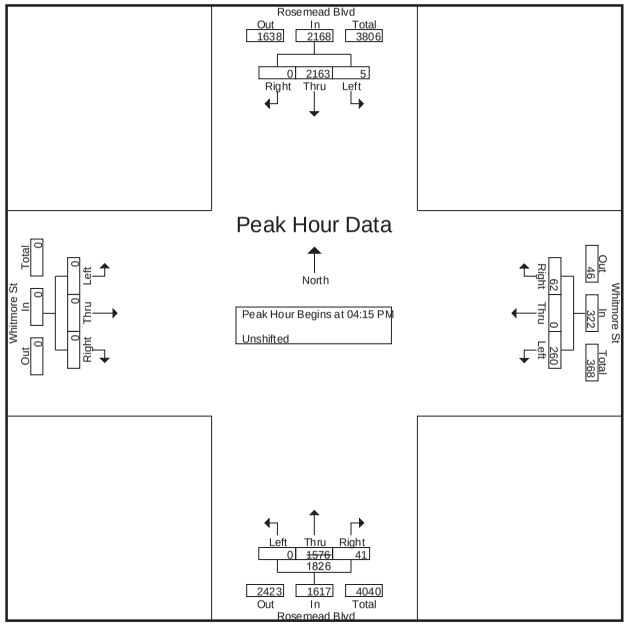

CITY TRAFFIC COUNTERS
626.991.7522
www.ctcounters.com

File Name : Rosemead_Whitmore_Sat
Site Code : 00000000
Start Date : 6/7/2014
Page No : 1

Groups Printed- Unshifted

	Rosemead Blvd Southbound			Whitmore St Westbound			Rosemead Blvd Northbound			Eastbound			
Start Time	Left	Thru	Right	Left	Thru	Right	Left	Thru	Right	Left	Thru	Right	Int. Total
12:00 PM	1	485	0	2	0	3	0	445	2	0	0	0	938
12:15 PM	5	477	0	3	0	2	0	480	9	0	0	0	976
12:30 PM	4	475	0	6	0	4	0	496	5	0	0	0	990
12:45 PM	11	459	0	5	0	4	0	497	2	0	0	0	978
Total	21	1896	0	16	0	13	0	1918	18	0	0	0	3882
01:00 PM	4	488	0	5	0	10	0	471	6	0	0	0	984
01:15 PM	8	471	0	2	0	1	0	469	6	0	0	0	957
01:30 PM	6	444	0	11	0	9	0	450	5	0	0	0	925
01:45 PM	3	479	0	4	0	4	0	459	8	0	0	0	957
Total	21	1882	0	22	0	24	0	1849	25	0	0	0	3823
Grand Total	42	3778	0	38	0	37	0	3767	43	0	0	0	7705
Apprch %	1.1	98.9	0	50.7	0	49.3	0	98.9	1.1	0	0	0	
Total %	0.5	49	0	0.5	0	0.5	0	48.9	0.6	0	0	0	

CITY TRAFFIC COUNTERS
626.991.7522
www.ctcounters.com

File Name : Rosemead_Whitmore_Sat
Site Code : 00000000
Start Date : 6/7/2014
Page No : 2

	Rosemead Blvd Southbound				Whitmore St Westbound				Rosemead Blvd Northbound				Eastbound				
Start Time	Left	Thru	Right	App. Total	Left	Thru	Right	App. Total	Left	Thru	Right	App. Total	Left	Thru	Right	App. Total	Int. Total
Peak Hour Analysis From 12:00 PM to 01:45 PM - Peak 1 of 1																	
Peak Hour for Entire Intersection Begins at 12:15 PM																	
12:15 PM	5	477	0	482	3	0	2	5	0	480	**9**	489	0	0	0	0	976
12:30 PM	4	475	0	479	**6**	0	4	10	0	496	5	**501**	0	0	0	0	**990**
12:45 PM	**11**	459	0	470	5	0	4	9	0	**497**	2	499	0	0	0	0	978
01:00 PM	4	**488**	0	**492**	5	0	**10**	**15**	0	471	6	477	0	0	0	0	984
Total Volume	24	1899	0	1923	19	0	20	39	0	1944	22	1966	0	0	0	0	3928
% App. Total	1.2	98.8	0		48.7	0	51.3		0	98.9	1.1		0	0	0		
PHF	.545	.973	.000	.977	.792	.000	.500	.650	.000	.978	.611	.981	.000	.000	.000	.000	.992

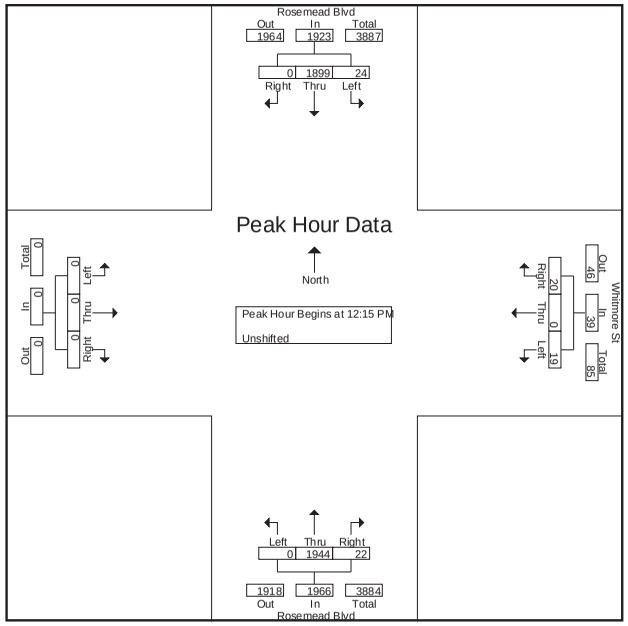

CITY TRAFFIC COUNTERS
626.991.7522
www.ctcounters.com

File Name : rosemead_garvey
Site Code : 00000000
Start Date : 6/5/2013
Page No : 1

Groups Printed- Unshifted

	Rosemead Blvd Southbound			Garvey Ave Westbound			Rosemead Blvd Northbound			Garvey Ave Eastbound			
Start Time	Left	Thru	Right	Left	Thru	Right	Left	Thru	Right	Left	Thru	Right	Int. Total
07:00 AM	59	266	37	36	87	69	16	280	12	38	55	19	974
07:15 AM	67	344	39	52	144	96	32	297	16	41	62	20	1210
07:30 AM	78	351	42	45	133	86	32	386	12	64	87	25	1341
07:45 AM	111	404	45	59	155	104	38	377	9	52	89	30	1473
Total	315	1365	163	192	519	355	118	1340	49	195	293	94	4998
08:00 AM	102	365	49	55	152	111	36	390	14	60	78	29	1441
08:15 AM	95	357	52	45	130	88	35	365	11	50	105	25	1358
08:30 AM	97	398	55	65	128	98	51	351	13	46	102	29	1433
08:45 AM	101	385	58	49	133	99	48	347	13	59	97	35	1424
Total	395	1505	214	214	543	396	170	1453	51	215	382	118	5656
04:00 PM	119	369	33	44	98	101	42	277	21	55	162	16	1337
04:15 PM	115	405	31	32	96	91	56	301	30	59	149	22	1387
04:30 PM	120	422	47	42	99	82	66	299	29	49	159	30	1444
04:45 PM	99	461	45	48	115	79	59	301	34	40	141	29	1451
Total	453	1657	156	166	408	353	223	1178	114	203	611	97	5619
05:00 PM	117	444	40	41	126	82	60	313	40	39	149	24	1475
05:15 PM	122	451	44	38	129	70	64	304	29	40	157	22	1470
05:30 PM	107	402	40	43	133	71	50	299	34	42	127	29	1377
05:45 PM	120	422	45	38	139	63	70	314	29	37	171	30	1478
Total	466	1719	169	160	527	286	244	1230	132	158	604	105	5800
Grand Total	1629	6246	702	732	1997	1390	755	5201	346	771	1890	414	22073
Apprch %	19	72.8	8.2	17.8	48.5	33.7	12	82.5	5.5	25.1	61.5	13.5	
Total %	7.4	28.3	3.2	3.3	9	6.3	3.4	23.6	1.6	3.5	8.6	1.9	

CITY TRAFFIC COUNTERS

626.991.7522

www.ctcounters.com

File Name : rosemead_garvey
Site Code : 00000000
Start Date : 6/5/2013
Page No : 2

	Rosemead Blvd Southbound				Garvey Ave Westbound				Rosemead Blvd Northbound				Garvey Ave Eastbound				
Start Time	Left	Thru	Right	App. Total	Left	Thru	Right	App. Total	Left	Thru	Right	App. Total	Left	Thru	Right	App. Total	Int. Total
Peak Hour Analysis From 07:00 AM to 11:45 AM - Peak 1 of 1																	
Peak Hour for Entire Intersection Begins at 07:45 AM																	
07:45 AM	**111**	**404**	45	**560**	59	**155**	104	**318**	38	377	9	424	52	89	**30**	171	**1473**
08:00 AM	102	365	49	516	55	152	**111**	318	36	**390**	**14**	**440**	**60**	78	29	167	1441
08:15 AM	95	357	52	504	45	130	88	263	35	365	11	411	50	**105**	25	**180**	1358
08:30 AM	97	398	**55**	550	**65**	128	98	291	**51**	351	13	415	46	102	29	177	1433
Total Volume	405	1524	201	2130	224	565	401	1190	160	1483	47	1690	208	374	113	695	5705
% App. Total	19	71.5	9.4		18.8	47.5	33.7		9.5	87.8	2.8		29.9	53.8	16.3		
PHF	.912	.943	.914	.951	.862	.911	.903	.936	.784	.951	.839	.960	.867	.890	.942	.965	.968

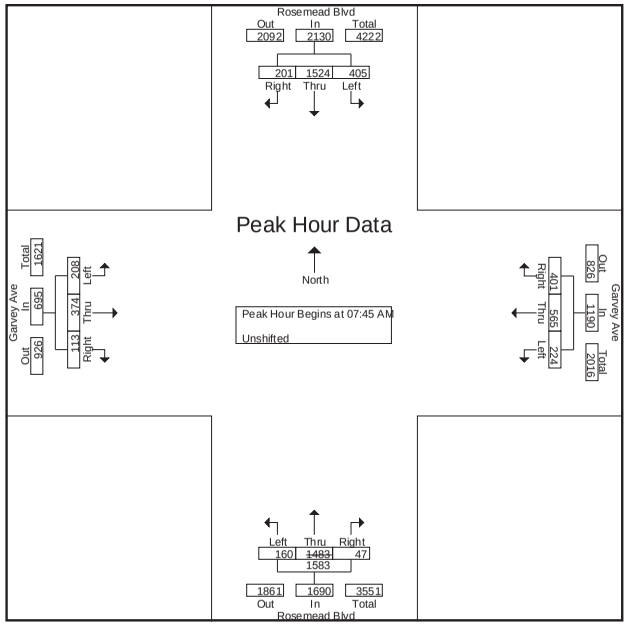

CITY TRAFFIC COUNTERS

626.991.7522

www.ctcounters.com

File Name : rosemead_garvey
Site Code : 00000000
Start Date : 6/5/2013
Page No : 3

	Rosemead Blvd Southbound				Garvey Ave Westbound				Rosemead Blvd Northbound				Garvey Ave Eastbound				
Start Time	Left	Thru	Right	App. Total	Left	Thru	Right	App. Total	Left	Thru	Right	App. Total	Left	Thru	Right	App. Total	Int. Total
Peak Hour Analysis From 12:00 PM to 05:45 PM - Peak 1 of 1																	
Peak Hour for Entire Intersection Begins at 04:30 PM																	
04:30 PM	120	422	**47**	589	42	99	**82**	223	**66**	299	29	394	**49**	**159**	**30**	**238**	1444
04:45 PM	99	**461**	45	605	**48**	115	79	242	59	301	34	394	40	141	29	210	1451
05:00 PM	117	444	40	601	41	126	82	**249**	60	**313**	**40**	**413**	39	149	24	212	**1475**
05:15 PM	**122**	451	44	**617**	38	**129**	70	237	64	304	29	397	40	157	22	219	1470
Total Volume	458	1778	176	2412	169	469	313	951	249	1217	132	1598	168	606	105	879	5840
% App. Total	19	73.7	7.3		17.8	49.3	32.9		15.6	76.2	8.3		19.1	68.9	11.9		
PHF	.939	.964	.936	.977	.880	.909	.954	.955	.943	.972	.825	.967	.857	.953	.875	.923	.990

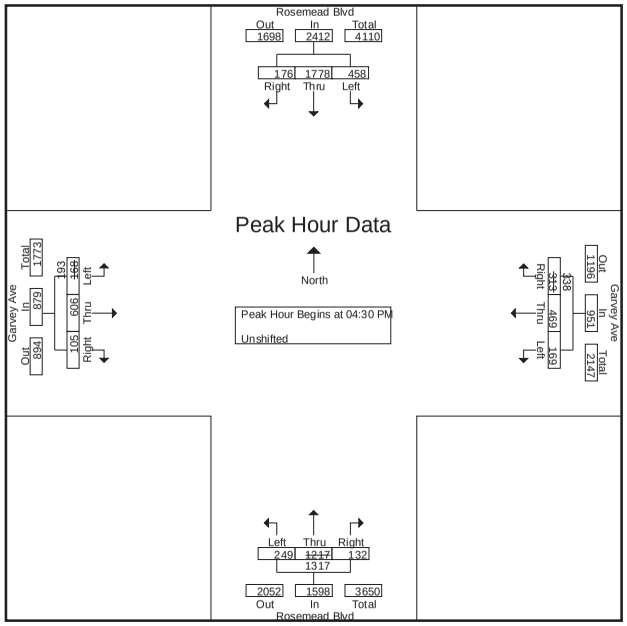

CITY TRAFFIC COUNTERS

626.991.7522

www.ctcounters.com

File Name : Rosemead_Garvey_Sat
Site Code : 00000000
Start Date : 6/7/2014
Page No : 1

Groups Printed- Unshifted

	Rosemead Blvd Southbound			Garvey Ave Westbound			Rosemead Blvd Northbound			Garvey Ave Eastbound			
Start Time	Left	Thru	Right	Left	Thru	Right	Left	Thru	Right	Left	Thru	Right	Int. Total
12:00 PM	127	282	61	51	109	103	51	228	21	88	119	10	1250
12:15 PM	137	262	54	44	99	121	55	254	25	87	131	20	1289
12:30 PM	138	291	40	54	88	100	65	284	41	89	140	14	1344
12:45 PM	119	277	46	42	121	125	54	277	24	86	139	17	1327
Total	521	1112	201	191	417	449	225	1043	111	350	529	61	5210
01:00 PM	150	272	49	54	119	95	68	270	30	92	143	13	1355
01:15 PM	136	272	55	43	117	99	62	291	34	72	163	20	1364
01:30 PM	120	277	41	73	110	93	83	262	26	86	160	13	1344
01:45 PM	122	280	57	66	121	113	67	255	20	79	175	14	1369
Total	528	1101	202	236	467	400	280	1078	110	329	641	60	5432
Grand Total	1049	2213	403	427	884	849	505	2121	221	679	1170	121	10642
Apprch %	28.6	60.4	11	19.8	40.9	39.3	17.7	74.5	7.8	34.5	59.4	6.1	
Total %	9.9	20.8	3.8	4	8.3	8	4.7	19.9	2.1	6.4	11	1.1	

CITY TRAFFIC COUNTERS

626.991.7522

www.ctcounters.com

File Name : Rosemead_Garvey_Sat
Site Code : 00000000
Start Date : 6/7/2014
Page No : 2

	Rosemead Blvd Southbound				Garvey Ave Westbound				Rosemead Blvd Northbound				Garvey Ave Eastbound				
Start Time	Left	Thru	Right	App. Total	Left	Thru	Right	App. Total	Left	Thru	Right	App. Total	Left	Thru	Right	App. Total	Int. Total
Peak Hour Analysis From 12:00 PM to 01:45 PM - Peak 1 of 1																	
Peak Hour for Entire Intersection Begins at 01:00 PM																	
01:00 PM	**150**	272	49	**471**	54	119	95	268	68	270	30	368	**92**	143	13	248	1355
01:15 PM	136	272	55	463	43	117	99	259	62	**291**	**34**	**387**	72	163	**20**	255	1364
01:30 PM	120	277	41	438	**73**	110	93	276	**83**	262	26	371	86	160	13	259	1344
01:45 PM	122	**280**	**57**	459	66	**121**	**113**	**300**	67	255	20	342	79	**175**	14	**268**	**1369**
Total Volume	528	1101	202	1831	236	467	400	1103	280	1078	110	1468	329	641	60	1030	5432
% App. Total	28.8	60.1	11		21.4	42.3	36.3		19.1	73.4	7.5		31.9	62.2	5.8		
PHF	.880	.983	.886	.972	.808	.965	.885	.919	.843	.926	.809	.948	.894	.916	.750	.961	.992

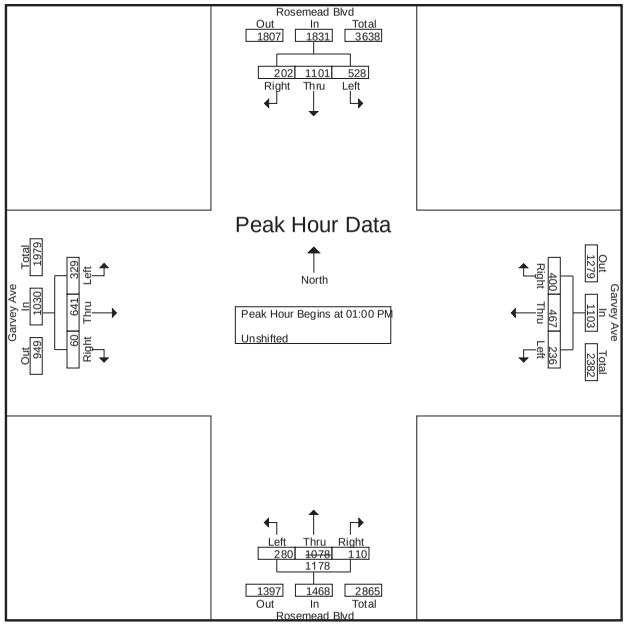

INTERSECTION TURNING MOVEMENT COUNT SUMMARY

CLIENT: LLG - PASADENA
PROJECT: FLAIR SPECTRUM - CITY OF EL MONTE
DATE: WEDNESDAY, JUNE 04, 2014
PERIOD: 07:00 AM TO 09:00 AM
INTERSECTION N/S AEROJET AVENUE / I-10 EB RAMPS
E/W FLAIR DRIVE
FILE NUMBER: 4-AM

15 MINUTE TOTALS	1 SBRT	2 SBTH	3 SBLT	4 WBRT	5 WBTH	6 WBLT	7 NBRT	8 NBTH	9 NBLT	10 EBRT	11 EBTH	12 EBLT
0700-0715	18	25	30	2	9	18	8	9	5	2	3	3
0715-0730	33	63	54	2	9	26	8	17	19	2	1	1
0730-0745	34	79	73	2	14	24	12	12	17	2	4	1
0745-0800	64	83	95	4	9	23	25	18	13	3	3	1
0800-0815	48	80	108	6	10	35	25	26	18	2	4	2
0815-0830	31	52	118	2	7	26	23	23	10	4	1	5
0830-0845	36	40	125	6	8	22	22	10	13	3	3	2
0845-0900	27	43	84	3	8	17	14	13	7	3	0	2

1 HOUR TOTALS	1 SBRT	2 SBTH	3 SBLT	4 WBRT	5 WBTH	6 WBLT	7 NBRT	8 NBTH	9 NBLT	10 EBRT	11 EBTH	12 EBLT	TOTALS
0700-0800	149	250	252	10	41	91	53	56	54	9	11	6	982
0715-0815	179	305	330	14	42	108	70	73	67	9	12	5	1214
0730-0830	177	294	394	14	40	108	85	79	58	11	12	9	1281
0745-0845	179	255	446	18	34	106	95	77	54	12	11	10	1297
0800-0900	142	215	435	17	33	100	84	72	48	12	8	11	1177

A.M. PEAK HOUR
0745-0845

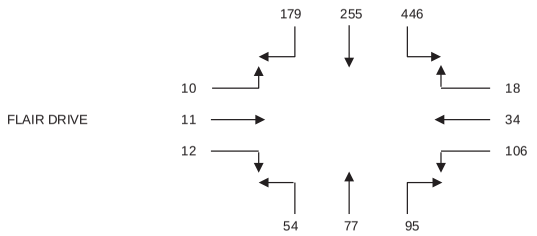

AEROJET AVENUE / I-10 EB RAMPS

DATA PROVIDED BY:

THE TRAFFIC SOLUTION
329 DIAMOND STREET
ARCADIA, CALIFORNIA 91005
PH: 626-446-7978
FAX: 626-446-2877
.

INTERSECTION TURNING MOVEMENT COUNT SUMMARY

CLIENT: LLG - PASADENA
PROJECT: FLAIR SPECTRUM - CITY OF EL MONTE
DATE: WEDNESDAY, JUNE 04, 2014
PERIOD: 04:00 PM TO 06:00 PM
INTERSECTION N/S AEROJET AVENUE / I-10 EB RAMPS
E/W FLAIR DRIVE
FILE NUMBER: 4-PM

15 MINUTE TOTALS	1 SBRT	2 SBTH	3 SBLT	4 WBRT	5 WBTH	6 WBLT	7 NBRT	8 NBTH	9 NBLT	10 EBRT	11 EBTH	12 EBLT
0400-0415	6	16	13	5	13	22	12	43	8	22	6	21
0415-0430	6	10	21	10	12	20	10	59	7	15	5	15
0430-0445	6	15	24	10	18	31	16	70	13	18	6	26
0445-0500	4	14	12	14	10	23	14	79	10	10	2	11
0500-0515	3	10	13	29	12	25	12	78	11	25	3	27
0515-0530	8	9	20	23	7	36	10	87	6	17	7	19
0530-0545	5	13	21	25	18	27	18	65	3	10	2	11
0545-0600	6	7	13	10	12	22	15	63	4	5	5	5

1 HOUR TOTALS	1 SBRT	2 SBTH	3 SBLT	4 WBRT	5 WBTH	6 WBLT	7 NBRT	8 NBTH	9 NBLT	10 EBRT	11 EBTH	12 EBLT	TOTALS
0400-0500	22	55	70	39	53	96	52	251	38	65	19	73	833
0415-0515	19	49	70	63	52	99	52	286	41	68	16	79	894
0430-0530	21	48	69	76	47	115	52	314	40	70	18	83	953
0445-0545	20	46	66	91	47	111	54	309	30	62	14	68	918
0500-0600	22	39	67	87	49	110	55	293	24	57	17	62	882

P.M. PEAK HOUR
0430-0530

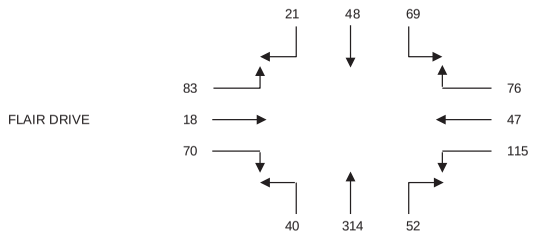

AEROJET AVENUE / I-10 EB RAMPS

DATA PROVIDED BY:

THE TRAFFIC SOLUTION
329 DIAMOND STREET
ARCADIA, CALIFORNIA 91005
PH: 626-446-7978
FAX: 626-446-2877
.

INTERSECTION TURNING MOVEMENT COUNT SUMMARY

CLIENT: LLG - PASADENA
PROJECT: FLAIR SPECTRUM - CITY OF EL MONTE
DATE: SATURDAY, JUNE 07, 2014
PERIOD: 12:00 PM TO 02:00 PM
INTERSECTION N/S AEROJET AVENUE / I-10 EB RAMPS
E/W FLAIR DRIVE
FILE NUMBER: 4-MD

15 MINUTE TOTALS	1 SBRT	2 SBTH	3 SBLT	4 WBRT	5 WBTH	6 WBLT	7 NBRT	8 NBTH	9 NBLT	10 EBRT	11 EBTH	12 EBLT
1200-1215	5	3	13	6	9	13	4	11	0	3	2	5
1215-1230	4	8	15	5	5	7	4	10	5	2	5	2
1230-1245	1	8	8	2	7	7	4	10	4	3	3	2
1245-0100	1	6	7	3	7	5	6	8	6	1	4	1
0100-0115	0	6	14	0	5	8	2	15	4	0	1	1
0115-0130	2	7	13	4	6	9	5	11	3	1	0	0
0130-0145	2	4	9	0	4	5	2	10	2	1	1	3
0145-0200	3	9	11	1	2	5	1	7	2	2	1	0

1 HOUR TOTALS	1 SBRT	2 SBTH	3 SBLT	4 WBRT	5 WBTH	6 WBLT	7 NBRT	8 NBTH	9 NBLT	10 EBRT	11 EBTH	12 EBLT	TOTALS
1200-0100	11	25	43	16	28	32	18	39	15	9	14	10	260
1215-0115	6	28	44	10	24	27	16	43	19	6	13	6	242
1230-0130	4	27	42	9	25	29	17	44	17	5	8	4	231
1245-0145	5	23	43	7	22	27	15	44	15	3	6	5	215
0100-0200	7	26	47	5	17	27	10	43	11	4	3	4	204

M.D. PEAK HOUR
1200-0100

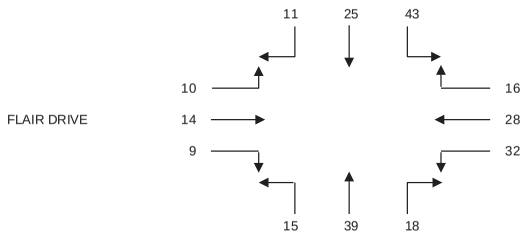

AEROJET AVENUE / I-10 EB RAMPS

DATA PROVIDED BY:

THE TRAFFIC SOLUTION
329 DIAMOND STREET
ARCADIA, CALIFORNIA 91005
PH: 626-446-7978
FAX: 626-446-2877
.

INTERSECTION TURNING MOVEMENT COUNT SUMMARY

CLIENT: LLG - PASADENA
PROJECT: FLAIR SPECTRUM - CITY OF EL MONTE
DATE: WEDNESDAY, JUNE 04, 2014
PERIOD: 07:00 AM TO 09:00 AM
INTERSECTION N/S AEROJET AVENUE
E/W TELSTAR AVENUE
FILE NUMBER: 5-AM

15 MINUTE TOTALS	1 SBRT	2 SBTH	3 SBLT	4 WBRT	5 WBTH	6 WBLT	7 NBRT	8 NBTH	9 NBLT	10 EBRT	11 EBTH	12 EBLT
0700-0715	19	1	27	16	31	0	0	0	0	0	45	54
0715-0730	16	1	24	9	28	1	0	0	0	0	58	81
0730-0745	20	1	20	11	32	3	0	0	0	0	73	90
0745-0800	25	3	18	17	37	4	0	8	0	0	94	124
0800-0815	20	1	12	18	25	2	0	2	0	0	100	101
0815-0830	34	5	17	14	38	2	0	4	0	0	95	100
0830-0845	31	2	17	17	38	2	0	0	0	0	86	86
0845-0900	35	1	14	15	37	0	0	2	0	0	70	71

1 HOUR TOTALS	1 SBRT	2 SBTH	3 SBLT	4 WBRT	5 WBTH	6 WBLT	7 NBRT	8 NBTH	9 NBLT	10 EBRT	11 EBTH	12 EBLT	TOTALS
0700-0800	80	6	89	53	128	8	0	8	0	0	270	349	991
0715-0815	81	6	74	55	122	10	0	10	0	0	325	396	1079
0730-0830	99	10	67	60	132	11	0	14	0	0	362	415	1170
0745-0845	110	11	64	66	138	10	0	14	0	0	375	411	1199
0800-0900	120	9	60	64	138	6	0	8	0	0	351	358	1114

A.M. PEAK HOUR
0745-0845

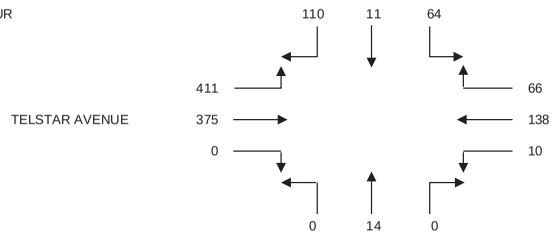

AEROJET AVENUE

DATA PROVIDED BY:

THE TRAFFIC SOLUTION
329 DIAMOND STREET
ARCADIA, CALIFORNIA 91005
PH: 626-446-7978
FAX: 626-446-2877
.

INTERSECTION TURNING MOVEMENT COUNT SUMMARY

CLIENT: LLG - PASADENA
PROJECT: FLAIR SPECTRUM - CITY OF EL MONTE
DATE: WEDNESDAY, JUNE 04, 2014
PERIOD: 04:00 PM TO 06:00 PM
INTERSECTION N/S AEROJET AVENUE
E/W TELSTAR AVENUE
FILE NUMBER: 5-PM

15 MINUTE TOTALS	1 SBRT	2 SBTH	3 SBLT	4 WBRT	5 WBTH	6 WBLT	7 NBRT	8 NBTH	9 NBLT	10 EBRT	11 EBTH	12 EBLT
0400-0415	78	1	9	15	88	0	0	0	0	0	32	35
0415-0430	66	3	3	12	92	2	0	2	0	0	33	34
0430-0445	89	14	6	5	135	26	0	0	0	0	35	35
0445-0500	110	12	11	13	113	13	0	0	0	0	37	44
0500-0515	101	26	5	9	140	16	0	1	0	0	42	30
0515-0530	90	11	6	14	110	7	0	0	0	0	36	28
0530-0545	108	11	7	7	80	5	0	0	0	0	47	25
0545-0600	83	9	0	5	71	8	0	0	0	0	24	28

1 HOUR TOTALS	1 SBRT	2 SBTH	3 SBLT	4 WBRT	5 WBTH	6 WBLT	7 NBRT	8 NBTH	9 NBLT	10 EBRT	11 EBTH	12 EBLT	TOTALS
0400-0500	343	30	29	45	428	41	0	2	0	0	137	148	1203
0415-0515	366	55	25	39	480	57	0	3	0	0	147	143	1315
0430-0530	390	63	28	41	498	62	0	1	0	0	150	137	1370
0445-0545	409	60	29	43	443	41	0	1	0	0	162	127	1315
0500-0600	382	57	18	35	401	36	0	1	0	0	149	111	1190

P.M. PEAK HOUR
0430-0530

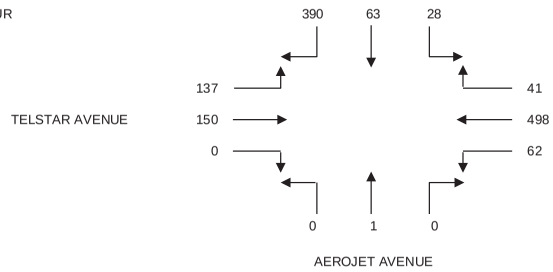

DATA PROVIDED BY:

THE TRAFFIC SOLUTION
329 DIAMOND STREET
ARCADIA, CALIFORNIA 91005
PH: 626-446-7978
FAX: 626-446-2877
.

INTERSECTION TURNING MOVEMENT COUNT SUMMARY

CLIENT: LLG - PASADENA
PROJECT: FLAIR SPECTRUM - CITY OF EL MONTE
DATE: SATURDAY, JUNE 07, 2014
PERIOD: 12:00 PM TO 02:00 PM
INTERSECTION N/S AEROJET AVENUE
E/W TELSTAR AVENUE
FILE NUMBER: 5-MD

15 MINUTE TOTALS	1 SBRT	2 SBTH	3 SBLT	4 WBRT	5 WBTH	6 WBLT	7 NBRT	8 NBTH	9 NBLT	10 EBRT	11 EBTH	12 EBLT
1200-1215	29	0	2	1	36	0	0	0	0	0	16	11
1215-1230	21	0	1	2	34	0	0	0	0	0	23	25
1230-1245	19	0	2	1	23	0	0	0	0	0	17	20
1245-0100	20	0	4	2	50	0	0	0	0	0	22	28
0100-0115	37	0	2	2	49	0	0	0	0	0	29	26
0115-0130	21	0	1	2	21	0	0	0	0	0	18	14
0130-0145	16	0	1	2	17	0	0	0	0	0	29	14
0145-0200	13	0	3	2	17	0	0	0	0	0	19	12

1 HOUR TOTALS	1 SBRT	2 SBTH	3 SBLT	4 WBRT	5 WBTH	6 WBLT	7 NBRT	8 NBTH	9 NBLT	10 EBRT	11 EBTH	12 EBLT	TOTALS
1200-0100	89	0	9	6	143	0	0	0	0	0	78	84	409
1215-0115	97	0	9	7	156	0	0	0	0	0	91	99	459
1230-0130	97	0	9	7	143	0	0	0	0	0	86	88	430
1245-0145	94	0	8	8	137	0	0	0	0	0	98	82	427
0100-0200	87	0	7	8	104	0	0	0	0	0	95	66	367

M.D. PEAK HOUR
1215-0115

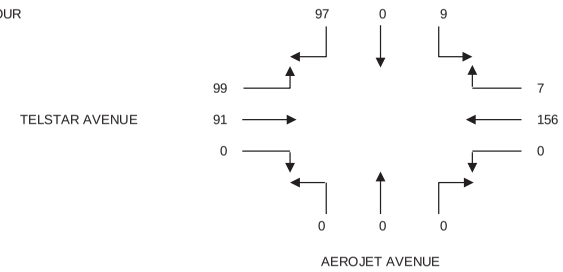

DATA PROVIDED BY:

THE TRAFFIC SOLUTION
329 DIAMOND STREET
ARCADIA, CALIFORNIA 91005
PH: 626-446-7978
FAX: 626-446-2877
.

INTERSECTION TURNING MOVEMENT COUNT SUMMARY

CLIENT: LLG - PASADENA
PROJECT: FLAIR SPECTRUM - CITY OF EL MONTE
DATE: WEDNESDAY, JUNE 04, 2014
PERIOD: 07:00 AM TO 09:00 AM
INTERSECTION N/S RIO HONDO AVENUE
E/W FLAIR DRIVE
FILE NUMBER: 6-AM

15 MINUTE TOTALS	1 SBRT	2 SBTH	3 SBLT	4 WBRT	5 WBTH	6 WBLT	7 NBRT	8 NBTH	9 NBLT	10 EBRT	11 EBTH	12 EBLT
0700-0715	0	0	0	0	56	5	3	0	0	10	16	0
0715-0730	0	0	0	0	52	8	2	0	2	10	17	0
0730-0745	0	0	0	0	53	12	4	0	2	13	29	0
0745-0800	0	0	0	0	49	19	5	0	3	18	38	0
0800-0815	0	0	0	0	67	10	7	0	6	23	39	0
0815-0830	0	0	0	0	58	8	6	0	2	21	48	0
0830-0845	0	0	0	0	59	14	5	0	1	20	67	0
0845-0900	0	0	0	0	66	8	7	0	3	24	59	0

1 HOUR TOTALS	1 SBRT	2 SBTH	3 SBLT	4 WBRT	5 WBTH	6 WBLT	7 NBRT	8 NBTH	9 NBLT	10 EBRT	11 EBTH	12 EBLT	TOTALS
0700-0800	0	0	0	0	210	44	14	0	7	51	100	0	426
0715-0815	0	0	0	0	221	49	18	0	13	64	123	0	488
0730-0830	0	0	0	0	227	49	22	0	13	75	154	0	540
0745-0845	0	0	0	0	233	51	23	0	12	82	192	0	593
0800-0900	0	0	0	0	250	40	25	0	12	88	213	0	628

A.M. PEAK HOUR
0800-0900

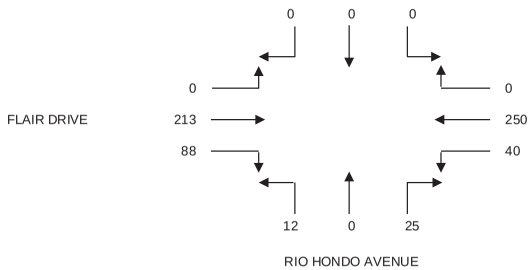

DATA PROVIDED BY:

THE TRAFFIC SOLUTION
329 DIAMOND STREET
ARCADIA, CALIFORNIA 91005
PH: 626-446-7978
FAX: 626-446-2877
.

INTERSECTION TURNING MOVEMENT COUNT SUMMARY

CLIENT: LLG - PASADENA
PROJECT: FLAIR SPECTRUM - CITY OF EL MONTE
DATE: WEDNESDAY, JUNE 04, 2014
PERIOD: 04:00 PM TO 06:00 PM
INTERSECTION N/S RIO HONDO AVENUE
E/W FLAIR DRIVE
FILE NUMBER: 6-PM

15 MINUTE TOTALS	1 SBRT	2 SBTH	3 SBLT	4 WBRT	5 WBTH	6 WBLT	7 NBRT	8 NBTH	9 NBLT	10 EBRT	11 EBTH	12 EBLT
0400-0415	0	0	0	0	22	4	9	0	6	7	29	0
0415-0430	0	0	0	0	26	4	10	0	10	5	32	0
0430-0445	0	0	0	0	28	2	5	0	12	4	34	0
0445-0500	0	0	0	0	24	5	12	0	9	5	32	0
0500-0515	0	0	0	0	33	6	11	0	11	9	45	0
0515-0530	0	0	0	0	20	4	9	0	5	11	30	0
0530-0545	0	0	0	0	29	4	9	0	4	6	52	0
0545-0600	0	0	0	0	28	7	8	0	6	4	32	0

1 HOUR TOTALS	1 SBRT	2 SBTH	3 SBLT	4 WBRT	5 WBTH	6 WBLT	7 NBRT	8 NBTH	9 NBLT	10 EBRT	11 EBTH	12 EBLT	TOTALS
0400-0500	0	0	0	0	100	15	36	0	37	21	127	0	336
0415-0515	0	0	0	0	111	17	38	0	42	23	143	0	374
0430-0530	0	0	0	0	105	17	37	0	37	29	141	0	366
0445-0545	0	0	0	0	106	19	41	0	29	31	159	0	385
0500-0600	0	0	0	0	110	21	37	0	26	30	159	0	383

P.M. PEAK HOUR
0445-0545

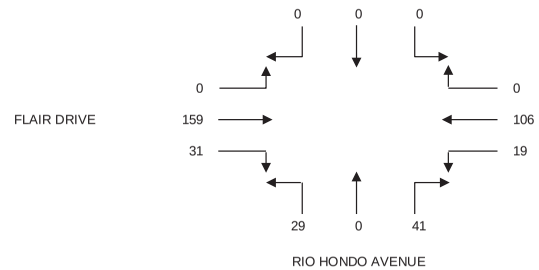

DATA PROVIDED BY:

THE TRAFFIC SOLUTION
329 DIAMOND STREET
ARCADIA, CALIFORNIA 91005
PH: 626-446-7978
FAX: 626-446-2877
.

INTERSECTION TURNING MOVEMENT COUNT SUMMARY

CLIENT: LLG - PASADENA
PROJECT: FLAIR SPECTRUM - CITY OF EL MONTE
DATE: SATURDAY, JUNE 07, 2014
PERIOD: 12:00 PM TO 02:00 PM
INTERSECTION N/S RIO HONDO AVENUE
E/W FLAIR DRIVE
FILE NUMBER: 6-MD

15 MINUTE TOTALS	1 SBRT	2 SBTH	3 SBLT	4 WBRT	5 WBTH	6 WBLT	7 NBRT	8 NBTH	9 NBLT	10 EBRT	11 EBTH	12 EBLT
1200-1215	0	0	0	0	7	0	0	0	0	1	5	0
1215-1230	0	0	0	0	9	0	0	0	0	1	7	0
1230-1245	0	0	0	0	6	0	0	0	1	0	5	0
1245-0100	0	0	0	0	7	1	0	0	0	1	4	0
0100-0115	0	0	0	0	7	2	0	0	0	1	6	0
0115-0130	0	0	0	0	10	1	1	0	0	0	5	0
0130-0145	0	0	0	0	10	0	1	0	1	2	4	0
0145-0200	0	0	0	0	9	1	0	0	0	1	6	0

1 HOUR TOTALS	1 SBRT	2 SBTH	3 SBLT	4 WBRT	5 WBTH	6 WBLT	7 NBRT	8 NBTH	9 NBLT	10 EBRT	11 EBTH	12 EBLT	TOTALS
1200-0100	0	0	0	0	29	1	0	0	1	3	21	0	55
1215-0115	0	0	0	0	29	3	0	0	1	3	22	0	58
1230-0130	0	0	0	0	30	4	1	0	1	2	20	0	58
1245-0145	0	0	0	0	34	4	2	0	1	4	19	0	64
0100-0200	0	0	0	0	36	4	2	0	1	4	21	0	68

M.D. PEAK HOUR
0100-0200

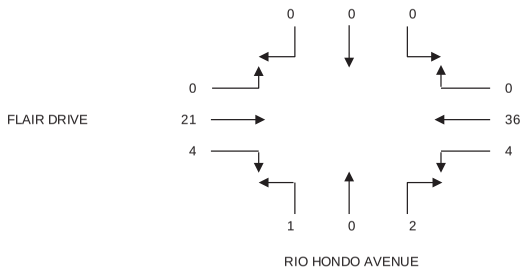

DATA PROVIDED BY:

THE TRAFFIC SOLUTION
329 DIAMOND STREET
ARCADIA, CALIFORNIA 91005
PH: 626-446-7978
FAX: 626-446-2877
.

INTERSECTION TURNING MOVEMENT COUNT SUMMARY

CLIENT: LLG - PASADENA
PROJECT: FLAIR SPECTRUM - CITY OF EL MONTE
DATE: WEDNESDAY, JUNE 04, 2014
PERIOD: 07:00 AM TO 09:00 AM
INTERSECTION N/S RIO HONDO AVENUE
E/W TELSTAR AVENUE
FILE NUMBER: 7-AM

15 MINUTE TOTALS	1 SBRT	2 SBTH	3 SBLT	4 WBRT	5 WBTH	6 WBLT	7 NBRT	8 NBTH	9 NBLT	10 EBRT	11 EBTH	12 EBLT
0700-0715	2	2	2	2	43	0	0	0	0	0	23	3
0715-0730	5	1	2	0	57	0	0	0	0	2	16	2
0730-0745	7	3	2	1	35	0	0	0	0	2	25	6
0745-0800	3	4	4	2	50	0	0	0	0	2	30	18
0800-0815	8	2	6	1	57	0	0	0	0	2	48	35
0815-0830	8	2	6	4	40	1	0	0	0	1	46	30
0830-0845	7	2	3	1	46	2	0	0	0	2	58	21
0845-0900	8	3	2	3	40	0	0	0	0	4	64	26

1 HOUR TOTALS	1 SBRT	2 SBTH	3 SBLT	4 WBRT	5 WBTH	6 WBLT	7 NBRT	8 NBTH	9 NBLT	10 EBRT	11 EBTH	12 EBLT	TOTALS
0700-0800	17	10	10	5	185	0	0	0	0	6	94	29	356
0715-0815	23	10	14	4	199	0	0	0	0	8	119	61	438
0730-0830	26	11	18	8	182	1	0	0	0	7	149	89	491
0745-0845	26	10	19	8	193	3	0	0	0	7	182	104	552
0800-0900	31	9	17	9	183	3	0	0	0	9	216	112	589

A.M. PEAK HOUR
0800-0900

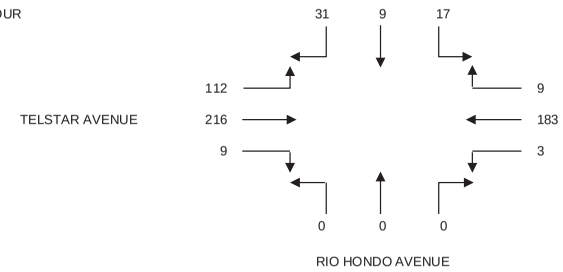

DATA PROVIDED BY:

THE TRAFFIC SOLUTION
329 DIAMOND STREET
ARCADIA, CALIFORNIA 91005
PH: 626-446-7978
FAX: 626-446-2877
.

INTERSECTION TURNING MOVEMENT COUNT SUMMARY

CLIENT: LLG - PASADENA
PROJECT: FLAIR SPECTRUM - CITY OF EL MONTE
DATE: WEDNESDAY, JUNE 04, 2014
PERIOD: 04:00 PM TO 06:00 PM
INTERSECTION N/S RIO HONDO AVENUE
E/W TELSTAR AVENUE
FILE NUMBER: 7-PM

15 MINUTE TOTALS	1 SBRT	2 SBTH	3 SBLT	4 WBRT	5 WBTH	6 WBLT	7 NBRT	8 NBTH	9 NBLT	10 EBRT	11 EBTH	12 EBLT
0400-0415	11	0	2	1	37	1	0	0	2	3	30	6
0415-0430	9	0	3	1	64	0	0	0	6	0	36	3
0430-0445	11	0	0	1	49	0	1	1	8	2	31	4
0445-0500	15	1	1	3	86	0	1	0	6	0	57	9
0500-0515	16	1	0	1	61	0	0	0	7	0	43	5
0515-0530	35	0	2	3	74	1	2	0	5	1	54	9
0530-0545	20	0	1	2	64	0	1	0	5	1	28	10
0545-0600	19	0	4	2	68	1	1	0	8	2	42	6

1 HOUR TOTALS	1 SBRT	2 SBTH	3 SBLT	4 WBRT	5 WBTH	6 WBLT	7 NBRT	8 NBTH	9 NBLT	10 EBRT	11 EBTH	12 EBLT	TOTALS
0400-0500	46	1	6	6	236	1	2	1	22	5	154	22	502
0415-0515	51	2	4	6	260	0	2	1	27	2	167	21	543
0430-0530	77	2	3	8	270	1	4	1	26	3	185	27	607
0445-0545	86	2	4	9	285	1	4	0	23	2	182	33	631
0500-0600	90	1	7	8	267	2	4	0	25	4	167	30	605

P.M. PEAK HOUR
0445-0545

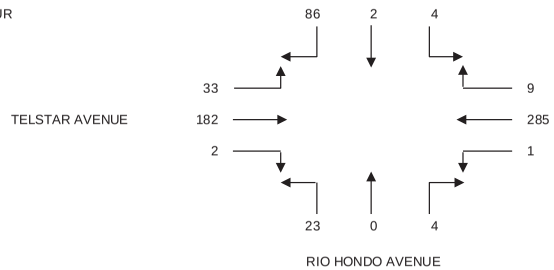

DATA PROVIDED BY:

THE TRAFFIC SOLUTION
329 DIAMOND STREET
ARCADIA, CALIFORNIA 91005
PH: 626-446-7978
FAX: 626-446-2877
.

INTERSECTION TURNING MOVEMENT COUNT SUMMARY

CLIENT: LLG - PASADENA
PROJECT: FLAIR SPECTRUM - CITY OF EL MONTE
DATE: SATURDAY, JUNE 07, 2014
PERIOD: 12:00 PM TO 02:00 PM
INTERSECTION N/S RIO HONDO AVENUE
E/W TELSTAR AVENUE
FILE NUMBER: 7-MD

15 MINUTE TOTALS	1 SBRT	2 SBTH	3 SBLT	4 WBRT	5 WBTH	6 WBLT	7 NBRT	8 NBTH	9 NBLT	10 EBRT	11 EBTH	12 EBLT
1200-1215	0	0	1	0	17	0	0	0	0	0	7	0
1215-1230	0	0	1	0	15	0	0	0	0	0	8	0
1230-1245	0	0	0	0	26	0	0	0	0	0	10	0
1245-0100	1	0	1	1	15	0	0	0	0	0	15	0
0100-0115	1	0	0	1	19	0	0	0	0	0	21	1
0115-0130	0	0	4	0	16	0	0	0	0	0	17	0
0130-0145	1	0	3	0	12	0	0	0	0	0	23	1
0145-0200	0	0	2	0	12	0	0	0	0	0	26	0

1 HOUR TOTALS	1 SBRT	2 SBTH	3 SBLT	4 WBRT	5 WBTH	6 WBLT	7 NBRT	8 NBTH	9 NBLT	10 EBRT	11 EBTH	12 EBLT	TOTALS
1200-0100	1	0	3	1	73	0	0	0	0	0	40	0	118
1215-0115	2	0	2	2	75	0	0	0	0	0	54	1	136
1230-0130	2	0	5	2	76	0	0	0	0	0	63	1	149
1245-0145	3	0	8	2	62	0	0	0	0	0	76	2	153
0100-0200	2	0	9	1	59	0	0	0	0	0	87	2	160

M.D. PEAK HOUR
0100-0200

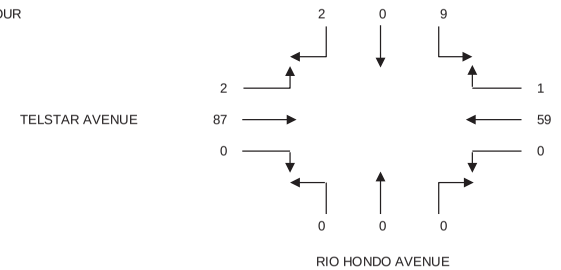

DATA PROVIDED BY:

THE TRAFFIC SOLUTION
329 DIAMOND STREET
ARCADIA, CALIFORNIA 91005
PH: 626-446-7978
FAX: 626-446-2877
.

INTERSECTION TURNING MOVEMENT COUNT SUMMARY

CLIENT: LLG - PASADENA
PROJECT: FLAIR SPECTRUM - CITY OF EL MONTE
DATE: THURSDAY, JUNE 05, 2014
PERIOD: 07:00 AM TO 09:00 AM
INTERSECTION N/S FLETCHER AVENUE
E/W FLAIR DRIVE
FILE NUMBER: 8-AM

15 MINUTE TOTALS	1 SBRT	2 SBTH	3 SBLT	4 WBRT	5 WBTH	6 WBLT	7 NBRT	8 NBTH	9 NBLT	10 EBRT	11 EBTH	12 EBLT
0700-0715	0	0	0	0	41	8	6	0	0	4	13	0
0715-0730	0	0	0	0	56	5	5	0	0	6	12	0
0730-0745	0	0	0	0	59	7	8	0	0	10	18	0
0745-0800	0	0	0	0	66	13	8	0	1	11	36	0
0800-0815	0	0	0	0	73	8	8	0	0	7	40	0
0815-0830	0	0	0	0	77	10	10	0	1	7	44	0
0830-0845	0	0	0	0	74	11	12	0	1	8	50	0
0845-0900	0	0	0	0	77	12	11	0	0	7	49	0

1 HOUR TOTALS	1 SBRT	2 SBTH	3 SBLT	4 WBRT	5 WBTH	6 WBLT	7 NBRT	8 NBTH	9 NBLT	10 EBRT	11 EBTH	12 EBLT	TOTALS
0700-0800	0	0	0	0	222	33	27	0	1	31	79	0	393
0715-0815	0	0	0	0	254	33	29	0	1	34	106	0	457
0730-0830	0	0	0	0	275	38	34	0	2	35	138	0	522
0745-0845	0	0	0	0	290	42	38	0	3	33	170	0	576
0800-0900	0	0	0	0	301	41	41	0	2	29	183	0	597

A.M. PEAK HOUR
0800-0900

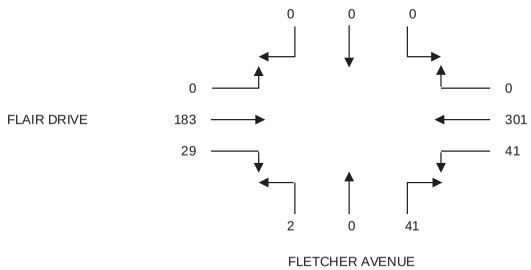

DATA PROVIDED BY:

THE TRAFFIC SOLUTION
329 DIAMOND STREET
ARCADIA, CALIFORNIA 91005
PH: 626-446-7978
FAX: 626-446-2877
.

INTERSECTION TURNING MOVEMENT COUNT SUMMARY

CLIENT: LLG - PASADENA
PROJECT: FLAIR SPECTRUM - CITY OF EL MONTE
DATE: THURSDAY, JUNE 05, 2014
PERIOD: 04:00 PM TO 06:00 PM
INTERSECTION N/S FLETCHER AVENUE
E/W FLAIR DRIVE
FILE NUMBER: 8-PM

15 MINUTE TOTALS	1 SBRT	2 SBTH	3 SBLT	4 WBRT	5 WBTH	6 WBLT	7 NBRT	8 NBTH	9 NBLT	10 EBRT	11 EBTH	12 EBLT
0400-0415	0	0	0	0	30	8	12	0	1	2	23	0
0415-0430	0	0	0	0	32	8	19	0	1	2	28	0
0430-0445	0	0	0	0	31	6	11	0	0	3	33	0
0445-0500	0	0	0	0	37	6	8	0	1	4	38	0
0500-0515	0	0	0	0	39	7	12	0	2	4	36	0
0515-0530	0	0	0	0	37	6	9	0	1	4	34	0
0530-0545	0	0	0	0	33	7	11	0	1	3	34	0
0545-0600	0	0	0	0	29	9	10	0	2	4	37	0

1 HOUR TOTALS	1 SBRT	2 SBTH	3 SBLT	4 WBRT	5 WBTH	6 WBLT	7 NBRT	8 NBTH	9 NBLT	10 EBRT	11 EBTH	12 EBLT	TOTALS
0400-0500	0	0	0	0	130	28	50	0	3	11	122	0	344
0415-0515	0	0	0	0	139	27	50	0	4	13	135	0	368
0430-0530	0	0	0	0	144	25	40	0	4	15	141	0	369
0445-0545	0	0	0	0	146	26	40	0	5	15	142	0	374
0500-0600	0	0	0	0	138	29	42	0	6	15	141	0	371

P.M. PEAK HOUR
0445-0545

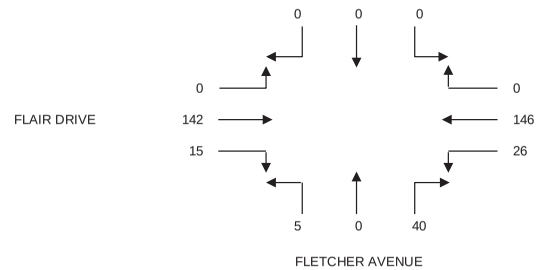

DATA PROVIDED BY:

THE TRAFFIC SOLUTION
329 DIAMOND STREET
ARCADIA, CALIFORNIA 91005
PH: 626-446-7978
FAX: 626-446-2877
.

INTERSECTION TURNING MOVEMENT COUNT SUMMARY

CLIENT: LLG - PASADENA
PROJECT: FLAIR SPECTRUM - CITY OF EL MONTE
DATE: SATURDAY, JUNE 07, 2014
PERIOD: 12:00 PM TO 02:00 PM
INTERSECTION N/S FLETCHER AVENUE
E/W FLAIR DRIVE
FILE NUMBER: 8-MD

15 MINUTE TOTALS	1 SBRT	2 SBTH	3 SBLT	4 WBRT	5 WBTH	6 WBLT	7 NBRT	8 NBTH	9 NBLT	10 EBRT	11 EBTH	12 EBLT
1200-1215	0	0	0	0	13	3	5	0	2	1	8	0
1215-1230	0	0	0	0	11	1	2	0	0	1	9	0
1230-1245	0	0	0	0	12	0	0	0	0	0	6	0
1245-0100	0	0	0	0	10	5	1	0	0	0	6	0
0100-0115	0	0	0	0	17	1	1	0	0	2	9	0
0115-0130	0	0	0	0	12	4	3	0	0	1	9	0
0130-0145	0	0	0	0	7	0	2	0	0	1	5	0
0145-0200	0	0	0	0	9	2	3	0	0	0	4	0

1 HOUR TOTALS	1 SBRT	2 SBTH	3 SBLT	4 WBRT	5 WBTH	6 WBLT	7 NBRT	8 NBTH	9 NBLT	10 EBRT	11 EBTH	12 EBLT	TOTALS
1200-0100	0	0	0	0	46	9	8	0	2	2	29	0	96
1215-0115	0	0	0	0	50	7	4	0	0	3	30	0	94
1230-0130	0	0	0	0	51	10	5	0	0	3	30	0	99
1245-0145	0	0	0	0	46	10	7	0	0	4	29	0	96
0100-0200	0	0	0	0	45	7	9	0	0	4	27	0	92

M.D. PEAK HOUR
1230-0130

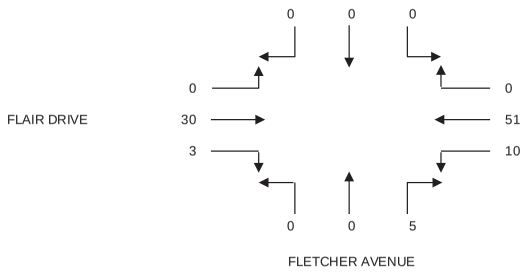

DATA PROVIDED BY:

THE TRAFFIC SOLUTION
329 DIAMOND STREET
ARCADIA, CALIFORNIA 91005
PH: 626-446-7978
FAX: 626-446-2877
.

INTERSECTION TURNING MOVEMENT COUNT SUMMARY

CLIENT: LLG - PASADENA
PROJECT: FLAIR SPECTRUM - CITY OF EL MONTE
DATE: THURSDAY, JUNE 05, 2014
PERIOD: 07:00 AM TO 09:00 AM
INTERSECTION N/S FLETCHER AVENUE
E/W TELSTAR AVENUE
FILE NUMBER: 9-AM

15 MINUTE TOTALS	1 SBRT	2 SBTH	3 SBLT	4 WBRT	5 WBTH	6 WBLT	7 NBRT	8 NBTH	9 NBLT	10 EBRT	11 EBTH	12 EBLT
0700-0715	6	0	3	2	51	0	0	0	0	0	11	3
0715-0730	5	0	1	2	54	2	0	0	0	1	11	4
0730-0745	9	0	2	2	70	0	0	0	0	2	13	6
0745-0800	14	0	3	3	71	1	0	0	0	4	14	11
0800-0815	9	4	1	3	69	4	0	0	0	8	16	12
0815-0830	8	10	0	3	60	7	5	0	4	11	20	19
0830-0845	8	0	1	2	57	0	0	0	2	2	27	17
0845-0900	9	0	1	1	49	0	0	0	1	2	26	15

1 HOUR TOTALS	1 SBRT	2 SBTH	3 SBLT	4 WBRT	5 WBTH	6 WBLT	7 NBRT	8 NBTH	9 NBLT	10 EBRT	11 EBTH	12 EBLT	TOTALS
0700-0800	34	0	9	9	246	3	0	0	0	7	49	24	381
0715-0815	37	4	7	10	264	7	0	0	0	15	54	33	431
0730-0830	40	14	6	11	270	12	5	0	4	25	63	48	498
0745-0845	39	14	5	11	257	12	5	0	6	25	77	59	510
0800-0900	34	14	3	9	235	11	5	0	7	23	89	63	493

A.M. PEAK HOUR
0745-0845

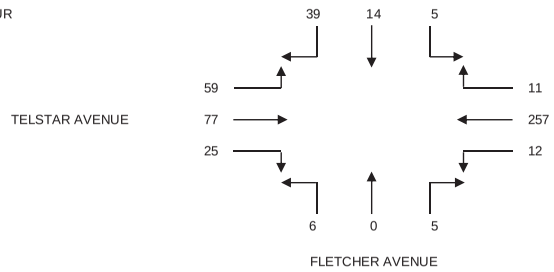

DATA PROVIDED BY:

THE TRAFFIC SOLUTION
329 DIAMOND STREET
ARCADIA, CALIFORNIA 91005
PH: 626-446-7978
FAX: 626-446-2877
.

INTERSECTION TURNING MOVEMENT COUNT SUMMARY

CLIENT: LLG - PASADENA
PROJECT: FLAIR SPECTRUM - CITY OF EL MONTE
DATE: THURSDAY, JUNE 05, 2014
PERIOD: 04:00 PM TO 06:00 PM
INTERSECTION N/S FLETCHER AVENUE
E/W TELSTAR AVENUE
FILE NUMBER: 9-PM

15 MINUTE TOTALS	1 SBRT	2 SBTH	3 SBLT	4 WBRT	5 WBTH	6 WBLT	7 NBRT	8 NBTH	9 NBLT	10 EBRT	11 EBTH	12 EBLT
0400-0415	7	0	3	0	26	0	0	0	2	1	38	2
0415-0430	11	0	2	1	29	0	2	0	2	0	49	2
0430-0445	15	0	0	1	39	0	5	0	10	0	61	3
0445-0500	15	0	1	0	40	1	0	0	2	0	58	1
0500-0515	19	0	0	1	44	0	0	0	1	0	55	1
0515-0530	11	0	1	1	36	0	0	0	2	0	44	2
0530-0545	11	0	1	0	30	0	3	0	0	0	40	0
0545-0600	10	1	0	1	30	1	2	0	2	0	39	1

1 HOUR TOTALS	1 SBRT	2 SBTH	3 SBLT	4 WBRT	5 WBTH	6 WBLT	7 NBRT	8 NBTH	9 NBLT	10 EBRT	11 EBTH	12 EBLT	TOTALS
0400-0500	48	0	6	2	134	1	7	0	16	1	206	8	429
0415-0515	60	0	3	3	152	1	7	0	15	0	223	7	471
0430-0530	60	0	2	3	159	1	5	0	15	0	218	7	470
0445-0545	56	0	3	2	150	1	3	0	5	0	197	4	421
0500-0600	51	1	2	3	140	1	5	0	5	0	178	4	390

P.M. PEAK HOUR
0415-0515

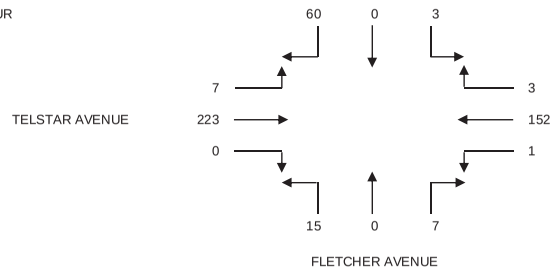

DATA PROVIDED BY:

THE TRAFFIC SOLUTION
329 DIAMOND STREET
ARCADIA, CALIFORNIA 91005
PH: 626-446-7978
FAX: 626-446-2877
.

INTERSECTION TURNING MOVEMENT COUNT SUMMARY

CLIENT: LLG - PASADENA
PROJECT: FLAIR SPECTRUM - CITY OF EL MONTE
DATE: SATURDAY, JUNE 07, 2014
PERIOD: 12:00 PM TO 02:00 PM
INTERSECTION N/S FLETCHER AVENUE
E/W TELSTAR AVENUE
FILE NUMBER: 9-MD

15 MINUTE TOTALS	1 SBRT	2 SBTH	3 SBLT	4 WBRT	5 WBTH	6 WBLT	7 NBRT	8 NBTH	9 NBLT	10 EBRT	11 EBTH	12 EBLT
1200-1215	0	0	0	0	7	0	0	0	0	0	11	1
1215-1230	3	0	0	0	11	0	0	0	0	0	7	3
1230-1245	2	0	0	0	11	0	0	0	0	0	9	2
1245-0100	2	0	0	0	8	0	0	0	0	0	11	1
0100-0115	5	0	0	0	12	0	0	0	0	0	14	0
0115-0130	0	0	0	0	9	0	0	0	0	0	6	1
0130-0145	0	0	1	0	6	0	0	0	0	0	7	2
0145-0200	3	0	0	0	9	0	0	0	0	0	5	2

1 HOUR TOTALS	1 SBRT	2 SBTH	3 SBLT	4 WBRT	5 WBTH	6 WBLT	7 NBRT	8 NBTH	9 NBLT	10 EBRT	11 EBTH	12 EBLT	TOTALS
1200-0100	7	0	0	0	37	0	0	0	0	0	38	7	89
1215-0115	12	0	0	0	42	0	0	0	0	0	41	6	101
1230-0130	9	0	0	0	40	0	0	0	0	0	40	4	93
1245-0145	7	0	1	0	35	0	0	0	0	0	38	4	85
0100-0200	8	0	1	0	36	0	0	0	0	0	32	5	82

M.D. PEAK HOUR
1215-0115

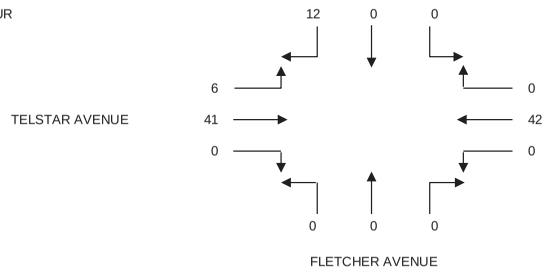

DATA PROVIDED BY:

THE TRAFFIC SOLUTION
329 DIAMOND STREET
ARCADIA, CALIFORNIA 91005
PH: 626-446-7978
FAX: 626-446-2877
.

INTERSECTION TURNING MOVEMENT COUNT SUMMARY

CLIENT: LLG - PASADENA
PROJECT: FLAIR SPECTRUM - CITY OF EL MONTE
DATE: THURSDAY, JUNE 05, 2014
PERIOD: 07:00 AM TO 09:00 AM
INTERSECTION N/S TELSTAR AVENUE
E/W FLAIR DRIVE
FILE NUMBER: 10-AM

15 MINUTE TOTALS	1 SBRT	2 SBTH	3 SBLT	4 WBRT	5 WBTH	6 WBLT	7 NBRT	8 NBTH	9 NBLT	10 EBRT	11 EBTH	12 EBLT
0700-0715	0	0	0	0	60	50	9	0	0	0	14	0
0715-0730	0	0	0	0	66	61	9	0	1	5	11	0
0730-0745	0	0	0	0	94	69	10	0	1	4	18	0
0745-0800	0	0	0	0	97	77	12	0	0	6	19	0
0800-0815	0	0	0	0	91	51	10	0	4	4	14	0
0815-0830	0	0	0	0	87	65	17	0	4	6	15	0
0830-0845	0	0	0	0	112	40	17	0	2	8	25	0
0845-0900	0	0	0	0	91	58	19	0	3	11	25	0

1 HOUR TOTALS	1 SBRT	2 SBTH	3 SBLT	4 WBRT	5 WBTH	6 WBLT	7 NBRT	8 NBTH	9 NBLT	10 EBRT	11 EBTH	12 EBLT	TOTALS
0700-0800	0	0	0	0	317	257	40	0	2	15	62	0	693
0715-0815	0	0	0	0	348	258	41	0	6	19	62	0	734
0730-0830	0	0	0	0	369	262	49	0	9	20	66	0	775
0745-0845	0	0	0	0	387	233	56	0	10	24	73	0	783
0800-0900	0	0	0	0	381	214	63	0	13	29	79	0	779

A.M. PEAK HOUR
0745-0845

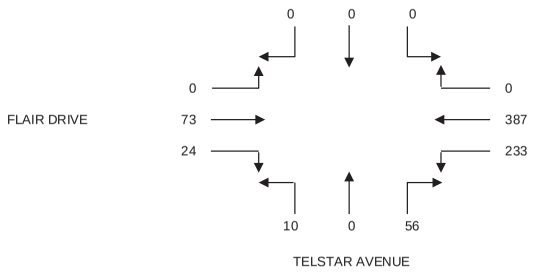

DATA PROVIDED BY:

THE TRAFFIC SOLUTION
329 DIAMOND STREET
ARCADIA, CALIFORNIA 91005
PH: 626-446-7978
FAX: 626-446-2877
.

INTERSECTION TURNING MOVEMENT COUNT SUMMARY

CLIENT: LLG - PASADENA
PROJECT: FLAIR SPECTRUM - CITY OF EL MONTE
DATE: THURSDAY, JUNE 05, 2014
PERIOD: 04:00 PM TO 06:00 PM
INTERSECTION N/S TELSTAR AVENUE
E/W FLAIR DRIVE
FILE NUMBER: 10-PM

15 MINUTE TOTALS	1 SBRT	2 SBTH	3 SBLT	4 WBRT	5 WBTH	6 WBLT	7 NBRT	8 NBTH	9 NBLT	10 EBRT	11 EBTH	12 EBLT
0400-0415	0	0	0	0	16	20	53	0	1	10	58	0
0415-0430	0	0	0	0	24	21	42	0	3	6	64	0
0430-0445	0	0	0	0	27	21	78	0	2	4	48	0
0445-0500	0	0	0	0	21	20	43	0	1	3	42	0
0500-0515	0	0	0	0	21	31	72	0	2	2	69	0
0515-0530	0	0	0	0	21	19	37	0	2	6	54	0
0530-0545	0	0	0	0	20	16	49	0	0	11	56	0
0545-0600	0	0	0	0	18	13	36	0	1	7	58	0

1 HOUR TOTALS	1 SBRT	2 SBTH	3 SBLT	4 WBRT	5 WBTH	6 WBLT	7 NBRT	8 NBTH	9 NBLT	10 EBRT	11 EBTH	12 EBLT	TOTALS
0400-0500	0	0	0	0	88	82	216	0	7	23	212	0	628
0415-0515	0	0	0	0	93	93	235	0	8	15	223	0	667
0430-0530	0	0	0	0	90	91	230	0	7	15	213	0	646
0445-0545	0	0	0	0	83	86	201	0	5	22	221	0	618
0500-0600	0	0	0	0	80	79	194	0	5	26	237	0	621

P.M. PEAK HOUR
0415-0515

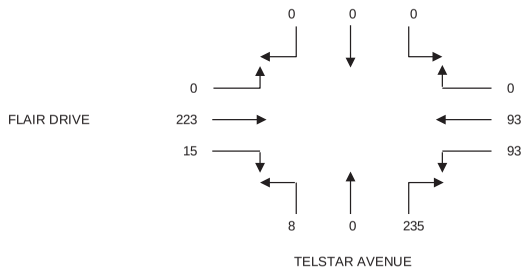

DATA PROVIDED BY:

THE TRAFFIC SOLUTION
329 DIAMOND STREET
ARCADIA, CALIFORNIA 91005
PH: 626-446-7978
FAX: 626-446-2877
.

INTERSECTION TURNING MOVEMENT COUNT SUMMARY

CITY TRAFFIC COUNTERS
626.991.7522
www.ctcounters.com

File Name : Chico_Garvey
Site Code : 00000000
Start Date : 6/5/2014
Page No : 1

CLIENT: LLG - PASADENA
PROJECT: FLAIR SPECTRUM - CITY OF EL MONTE
DATE: SATURDAY, JUNE 07, 2014
PERIOD: 12:00 PM TO 02:00 PM
INTERSECTION N/S TELSTAR AVENUE
E/W FLAIR DRIVE
FILE NUMBER: 10-MD

15 MINUTE TOTALS	1 SBRT	2 SBTH	3 SBLT	4 WBRT	5 WBTH	6 WBLT	7 NBRT	8 NBTH	9 NBLT	10 EBRT	11 EBTH	12 EBLT
1200-1215	0	0	0	0	22	16	15	0	1	1	24	0
1215-1230	0	0	0	0	16	11	11	0	0	1	18	0
1230-1245	0	0	0	0	10	9	6	0	0	0	10	0
1245-0100	0	0	0	0	13	8	13	0	1	1	10	0
0100-0115	0	0	0	0	16	13	10	0	2	1	13	0
0115-0130	0	0	0	0	19	9	5	0	0	2	17	0
0130-0145	0	0	0	0	13	5	9	0	0	0	10	0
0145-0200	0	0	0	0	18	11	5	0	0	0	11	0

1 HOUR TOTALS	1 SBRT	2 SBTH	3 SBLT	4 WBRT	5 WBTH	6 WBLT	7 NBRT	8 NBTH	9 NBLT	10 EBRT	11 EBTH	12 EBLT	TOTALS
1200-0100	0	0	0	0	61	44	45	0	2	3	62	0	217
1215-0115	0	0	0	0	55	41	40	0	3	3	51	0	193
1230-0130	0	0	0	0	58	39	34	0	3	4	50	0	188
1245-0145	0	0	0	0	61	35	37	0	3	4	50	0	190
0100-0200	0	0	0	0	66	38	29	0	2	3	51	0	189

M.D. PEAK HOUR
1200-0100

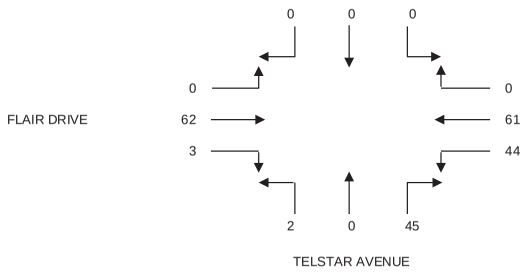

Groups Printed- Unshifted

	Chico Ave Southbound			Garvey Ave Westbound			Chico Ave Northbound			Garvey Ave Eastbound			
Start Time	Left	Thru	Right	Left	Thru	Right	Left	Thru	Right	Left	Thru	Right	Int. Total
07:00 AM	0	0	0	22	170	0	8	0	10	5	101	25	341
07:15 AM	0	0	0	21	250	0	32	0	9	0	107	34	453
07:30 AM	0	1	0	26	226	0	20	0	12	0	152	37	474
07:45 AM	0	2	0	37	248	0	30	1	22	0	169	37	546
Total	0	3	0	106	894	0	90	1	53	5	529	133	1814
08:00 AM	0	0	0	37	290	0	26	0	13	1	139	35	541
08:15 AM	0	0	1	44	225	2	25	0	22	2	158	44	523
08:30 AM	0	0	0	34	247	1	31	0	28	2	128	34	505
08:45 AM	0	0	0	28	246	6	28	0	15	0	161	35	519
Total	0	0	1	143	1008	9	110	0	78	5	586	148	2088
04:00 PM	0	0	0	22	193	2	41	1	26	1	258	31	575
04:15 PM	0	0	0	19	155	0	28	0	37	0	256	16	511
04:30 PM	0	0	0	16	209	0	28	0	41	2	255	22	573
04:45 PM	3	0	3	20	216	7	42	0	26	2	251	24	594
Total	3	0	3	77	773	9	139	1	130	5	1020	93	2253
05:00 PM	0	0	1	23	205	2	42	1	32	0	273	20	599
05:15 PM	2	0	0	19	215	3	45	0	19	9	269	13	594
05:30 PM	3	0	1	17	241	1	42	0	41	1	234	11	592
05:45 PM	0	0	1	26	229	0	37	0	21	1	266	18	599
Total	5	0	3	85	890	6	166	1	113	11	1042	62	2384
Grand Total	8	3	7	411	3565	24	505	3	374	26	3177	436	8539
Apprch %	44.4	16.7	38.9	10.3	89.1	0.6	57.3	0.3	42.4	0.7	87.3	12	
Total %	0.1	0	0.1	4.8	41.7	0.3	5.9	0	4.4	0.3	37.2	5.1	

DATA PROVIDED BY:

THE TRAFFIC SOLUTION
329 DIAMOND STREET
ARCADIA, CALIFORNIA 91005
PH: 626-446-7978
FAX: 626-446-2877
.

CITY TRAFFIC COUNTERS

626.991.7522

www.ctcounters.com

File Name : Chico_Garvey
Site Code : 00000000
Start Date : 6/5/2014
Page No : 2

	Chico Ave Southbound				Garvey Ave Westbound				Chico Ave Northbound				Garvey Ave Eastbound				
Start Time	Left	Thru	Right	App. Total	Left	Thru	Right	App. Total	Left	Thru	Right	App. Total	Left	Thru	Right	App. Total	Int. Total
Peak Hour Analysis From 07:00 AM to 11:45 AM - Peak 1 of 1																	
Peak Hour for Entire Intersection Begins at 07:45 AM																	
07:45 AM	0	**2**	0	**2**	37	248	0	285	30	**1**	22	53	0	**169**	37	**206**	**546**
08:00 AM	0	0	0	0	37	**290**	0	**327**	26	0	13	39	1	139	35	175	541
08:15 AM	0	0	**1**	1	**44**	225	**2**	271	25	0	22	47	**2**	158	**44**	204	523
08:30 AM	0	0	0	0	34	247	1	282	**31**	0	**28**	**59**	2	128	34	164	505
Total Volume	0	2	1	3	152	1010	3	1165	112	1	85	198	5	594	150	749	2115
% App. Total	0	66.7	33.3		13	86.7	0.3		56.6	0.5	42.9		0.7	79.3	20		
PHF	.000	.250	.250	.375	.864	.871	.375	.891	.903	.250	.759	.839	.625	.879	.852	.909	.968

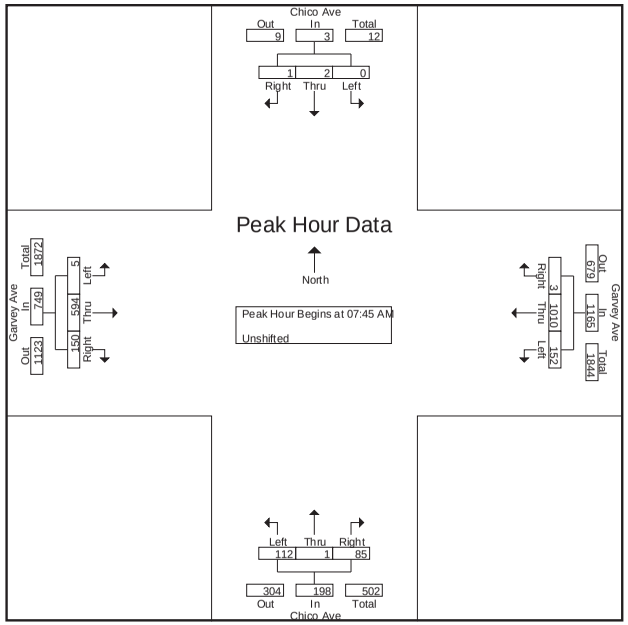

CITY TRAFFIC COUNTERS

626.991.7522

www.ctcounters.com

File Name : Chico_Garvey
Site Code : 00000000
Start Date : 6/5/2014
Page No : 3

	Chico Ave Southbound				Garvey Ave Westbound				Chico Ave Northbound				Garvey Ave Eastbound				
Start Time	Left	Thru	Right	App. Total	Left	Thru	Right	App. Total	Left	Thru	Right	App. Total	Left	Thru	Right	App. Total	Int. Total
Peak Hour Analysis From 12:00 PM to 05:45 PM - Peak 1 of 1																	
Peak Hour for Entire Intersection Begins at 05:00 PM																	
05:00 PM	0	0	**1**	1	23	205	2	230	42	**1**	32	75	0	**273**	**20**	**293**	**599**
05:15 PM	2	0	0	2	19	215	**3**	237	**45**	0	19	64	**9**	269	13	291	594
05:30 PM	**3**	0	1	**4**	17	**241**	1	**259**	42	0	**41**	**83**	1	234	11	246	592
05:45 PM	0	0	1	1	**26**	229	0	255	37	0	21	58	1	266	18	285	599
Total Volume	5	0	3	8	85	890	6	981	166	1	113	280	11	1042	62	1115	2384
% App. Total	62.5	0	37.5		8.7	90.7	0.6		59.3	0.4	40.4		1	93.5	5.6		
PHF	.417	.000	.750	.500	.817	.923	.500	.947	.922	.250	.689	.843	.306	.954	.775	.951	.995

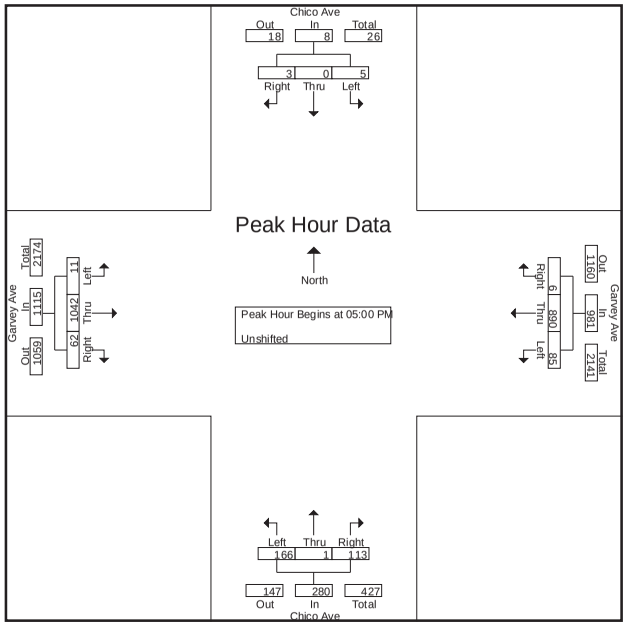

CITY TRAFFIC COUNTERS

626.991.7522

www.ctcounters.com

File Name : Chico_Garvey_Sat
Site Code : 00000000
Start Date : 6/7/2014
Page No : 1

Groups Printed- Unshifted

	Driveway Southbound			Garvey Ave Westbound			Chico Ave Northbound			Garvey Ave Eastbound			
Start Time	Left	Thru	Right	Left	Thru	Right	Left	Thru	Right	Left	Thru	Right	Int. Total
12:00 PM	0	0	4	24	206	4	28	0	30	3	230	26	555
12:15 PM	1	0	1	32	224	0	29	0	39	4	285	18	633
12:30 PM	1	0	3	30	213	0	25	0	41	5	276	26	620
12:45 PM	0	0	1	36	248	0	43	0	33	4	236	21	622
Total	2	0	9	122	891	4	125	0	143	16	1027	91	2430
01:00 PM	0	0	0	33	235	1	22	0	39	0	294	32	656
01:15 PM	0	0	1	24	229	1	26	0	38	0	282	38	639
01:30 PM	1	0	0	29	238	5	31	0	42	0	270	25	641
01:45 PM	0	0	1	25	250	4	33	0	33	2	284	28	660
Total	1	0	2	111	952	11	112	0	152	2	1130	123	2596
Grand Total	3	0	11	233	1843	15	237	0	295	18	2157	214	5026
Apprch %	21.4	0	78.6	11.1	88.1	0.7	44.5	0	55.5	0.8	90.3	9	
Total %	0.1	0	0.2	4.6	36.7	0.3	4.7	0	5.9	0.4	42.9	4.3	

CITY TRAFFIC COUNTERS

626.991.7522

www.ctcounters.com

File Name : Chico_Garvey_Sat
Site Code : 00000000
Start Date : 6/7/2014
Page No : 2

	Driveway Southbound				Garvey Ave Westbound				Chico Ave Northbound				Garvey Ave Eastbound				
Start Time	Left	Thru	Right	App. Total	Left	Thru	Right	App. Total	Left	Thru	Right	App. Total	Left	Thru	Right	App. Total	Int. Total
Peak Hour Analysis From 12:00 PM to 01:45 PM - Peak 1 of 1																	
Peak Hour for Entire Intersection Begins at 01:00 PM																	
01:00 PM	0	0	0	0	**33**	235	1	269	22	0	39	61	0	**294**	32	**326**	656
01:15 PM	0	0	**1**	**1**	24	229	1	254	26	0	38	64	0	282	**38**	320	639
01:30 PM	**1**	0	0	1	29	238	**5**	272	31	0	**42**	**73**	0	270	25	295	641
01:45 PM	0	0	1	1	25	**250**	4	**279**	**33**	0	33	66	**2**	284	28	314	**660**
Total Volume	1	0	2	3	111	952	11	1074	112	0	152	264	2	1130	123	1255	2596
% App. Total	33.3	0	66.7		10.3	88.6	1		42.4	0	57.6		0.2	90	9.8		
PHF	.250	.000	.500	.750	.841	.952	.550	.962	.848	.000	.905	.904	.250	.961	.809	.962	.983

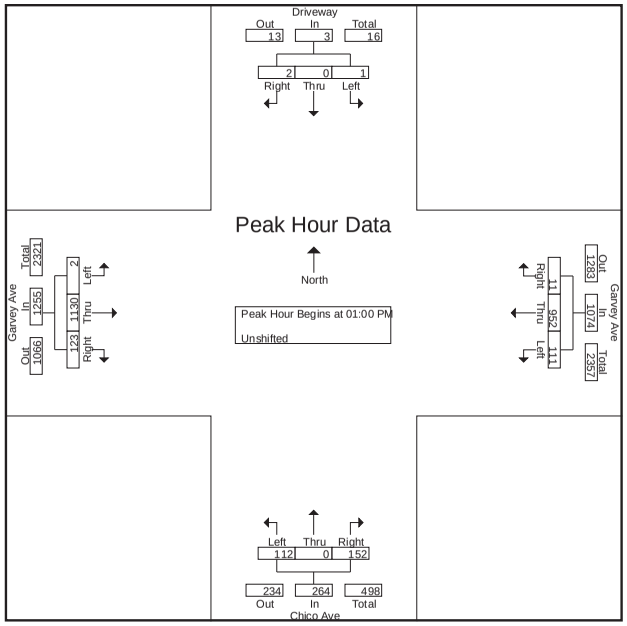

CITY TRAFFIC COUNTERS

626.991.7522

www.ctcounters.com

File Name : TC_LowerAz
Site Code : 00000000
Start Date : 6/4/2014
Page No : 1

Groups Printed- Unshifted

	Temple City Blvd Southbound			Lower Azusa Rd Westbound			Temple City Blvd Northbound			Lower Azusa Rd Eastbound			
Start Time	Left	Thru	Right	Left	Thru	Right	Left	Thru	Right	Left	Thru	Right	Int. Total
07:00 AM	26	151	15	49	121	14	10	124	0	5	48	8	571
07:15 AM	17	136	10	39	143	29	15	152	3	9	56	8	617
07:30 AM	35	180	12	57	201	17	19	153	6	11	103	18	812
07:45 AM	40	209	11	57	181	26	34	167	5	15	98	21	864
Total	118	676	48	202	646	86	78	596	14	40	305	55	2864
08:00 AM	47	198	16	44	170	31	19	165	4	17	120	19	850
08:15 AM	28	205	20	60	173	23	17	125	4	29	112	14	810
08:30 AM	35	180	13	57	171	28	9	170	10	31	89	15	808
08:45 AM	34	166	13	70	171	20	4	120	6	22	99	17	742
Total	144	749	62	231	685	102	49	580	24	99	420	65	3210
04:00 PM	34	86	4	62	117	22	9	133	11	33	162	13	686
04:15 PM	36	138	16	53	102	21	13	129	7	47	124	8	694
04:30 PM	53	130	9	72	119	38	18	194	14	33	162	14	856
04:45 PM	37	115	28	48	105	19	16	199	19	39	138	6	769
Total	160	469	57	235	443	100	56	655	51	152	586	41	3005
05:00 PM	50	112	13	52	133	36	39	195	23	34	177	8	872
05:15 PM	66	146	33	75	111	30	39	192	19	50	134	12	907
05:30 PM	50	137	26	74	83	18	33	216	17	47	123	5	829
05:45 PM	63	134	33	68	102	20	53	263	26	66	122	14	964
Total	229	529	105	269	429	104	164	866	85	197	556	39	3572
Grand Total	651	2423	272	937	2203	392	347	2697	174	488	1867	200	12651
Apprch %	19.5	72.4	8.1	26.5	62.4	11.1	10.8	83.8	5.4	19.1	73.1	7.8	
Total %	5.1	19.2	2.2	7.4	17.4	3.1	2.7	21.3	1.4	3.9	14.8	1.6	

CITY TRAFFIC COUNTERS

626.991.7522

www.ctcounters.com

File Name : TC_LowerAz
Site Code : 00000000
Start Date : 6/4/2014
Page No : 2

	Temple City Blvd Southbound				Lower Azusa Rd Westbound				Temple City Blvd Northbound				Lower Azusa Rd Eastbound				
Start Time	Left	Thru	Right	App. Total	Left	Thru	Right	App. Total	Left	Thru	Right	App. Total	Left	Thru	Right	App. Total	Int. Total
Peak Hour Analysis From 07:00 AM to 11:45 AM - Peak 1 of 1																	
Peak Hour for Entire Intersection Begins at 07:30 AM																	
07:30 AM	35	180	12	227	57	**201**	17	**275**	19	153	**6**	178	11	103	18	132	812
07:45 AM	40	**209**	11	260	57	181	26	264	**34**	**167**	5	**206**	15	98	**21**	134	**864**
08:00 AM	**47**	198	16	**261**	44	170	**31**	245	19	165	4	188	17	**120**	19	**156**	850
08:15 AM	28	205	**20**	253	**60**	173	23	256	17	125	4	146	**29**	112	14	155	810
Total Volume	150	792	59	1001	218	725	97	1040	89	610	19	718	72	433	72	577	3336
% App. Total	15	79.1	5.9		21	69.7	9.3		12.4	85	2.6		12.5	75	12.5		
PHF	.798	.947	.738	.959	.908	.902	.782	.945	.654	.913	.792	.871	.621	.902	.857	.925	.965

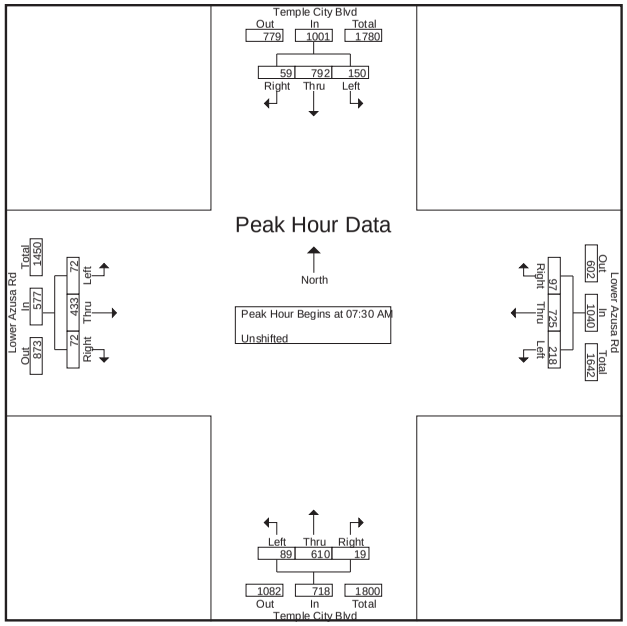

CITY TRAFFIC COUNTERS
626.991.7522
www.ctcounters.com

File Name : TC_LowerAz
Site Code : 00000000
Start Date : 6/4/2014
Page No : 3

	Temple City Blvd Southbound				Lower Azusa Rd Westbound				Temple City Blvd Northbound				Lower Azusa Rd Eastbound				
Start Time	Left	Thru	Right	App. Total	Left	Thru	Right	App. Total	Left	Thru	Right	App. Total	Left	Thru	Right	App. Total	Int. Total
Peak Hour Analysis From 12:00 PM to 05:45 PM - Peak 1 of 1																	
Peak Hour for Entire Intersection Begins at 05:00 PM																	
05:00 PM	50	112	13	175	52	**133**	**36**	**221**	39	195	23	257	34	**177**	8	**219**	872
05:15 PM	**66**	**146**	**33**	**245**	**75**	111	30	216	39	192	19	250	50	134	12	196	907
05:30 PM	50	137	26	213	74	83	18	175	33	216	17	266	47	123	5	175	829
05:45 PM	63	134	33	230	68	102	20	190	**53**	**263**	**26**	**342**	**66**	122	**14**	202	**964**
Total Volume	229	529	105	863	269	429	104	802	164	866	85	1115	197	556	39	792	3572
% App. Total	26.5	61.3	12.2		33.5	53.5	13		14.7	77.7	7.6		24.9	70.2	4.9		
PHF	.867	.906	.795	.881	.897	.806	.722	.907	.774	.823	.817	.815	.746	.785	.696	.904	.926

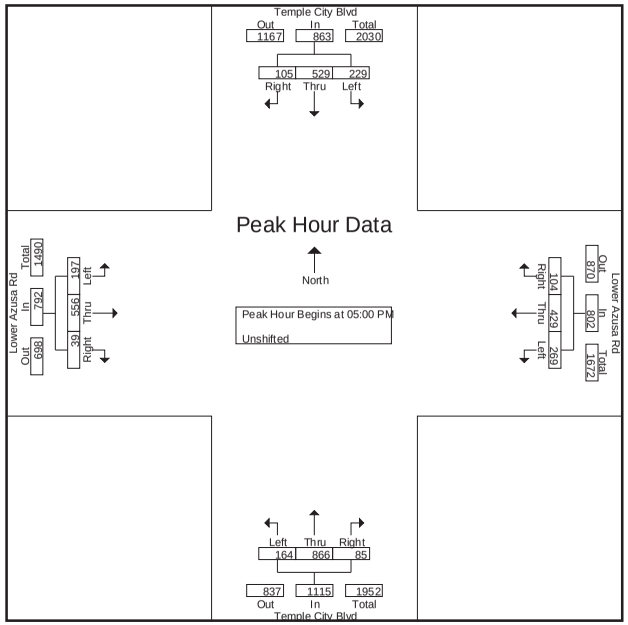

CITY TRAFFIC COUNTERS
626.991.7522
www.ctcounters.com

File Name : TempleCity_LowerAzusa_Sat
Site Code : 00000000
Start Date : 6/7/2014
Page No : 1

Groups Printed- Unshifted

	Temple City Blvd Southbound			Lower Azusa Rd Westbound			Temple City Blvd Northbound			Lower Azusa Rd Eastbound			
Start Time	Left	Thru	Right	Left	Thru	Right	Left	Thru	Right	Left	Thru	Right	Int. Total
12:00 PM	43	134	19	78	115	38	24	158	17	14	110	10	760
12:15 PM	41	123	17	64	121	31	17	150	12	21	129	9	735
12:30 PM	31	131	13	75	117	47	16	161	15	20	109	13	748
12:45 PM	46	114	18	68	106	36	17	138	15	26	121	5	710
Total	161	502	67	285	459	152	74	607	59	81	469	37	2953
01:00 PM	31	138	10	71	81	38	11	148	14	19	112	9	682
01:15 PM	41	120	16	72	98	30	7	128	14	26	116	5	673
01:30 PM	46	135	15	69	122	29	19	131	9	35	114	5	729
01:45 PM	38	133	10	78	97	27	19	121	12	24	116	6	681
Total	156	526	51	290	398	124	56	528	49	104	458	25	2765
Grand Total	317	1028	118	575	857	276	130	1135	108	185	927	62	5718
Apprch %	21.7	70.3	8.1	33.7	50.2	16.2	9.5	82.7	7.9	15.8	79	5.3	
Total %	5.5	18	2.1	10.1	15	4.8	2.3	19.8	1.9	3.2	16.2	1.1	

CITY TRAFFIC COUNTERS

626.991.7522

www.ctcounters.com

File Name : TempleCity_LowerAzusa_Sat
Site Code : 00000000
Start Date : 6/7/2014
Page No : 2

	Temple City Blvd Southbound				Lower Azusa Rd Westbound				Temple City Blvd Northbound				Lower Azusa Rd Eastbound				
Start Time	Left	Thru	Right	App. Total	Left	Thru	Right	App. Total	Left	Thru	Right	App. Total	Left	Thru	Right	App. Total	Int. Total
Peak Hour Analysis From 12:00 PM to 01:45 PM - Peak 1 of 1																	
Peak Hour for Entire Intersection Begins at 12:00 PM																	
12:00 PM	43	**134**	**19**	**196**	**78**	115	38	231	**24**	158	**17**	**199**	14	110	10	134	**760**
12:15 PM	41	123	17	181	64	**121**	31	216	17	150	12	179	21	**129**	9	**159**	735
12:30 PM	31	131	13	175	75	117	**47**	**239**	16	**161**	15	192	20	109	**13**	142	748
12:45 PM	**46**	114	18	178	68	106	36	210	17	138	15	170	**26**	121	5	152	710
Total Volume	161	502	67	730	285	459	152	896	74	607	59	740	81	469	37	587	2953
% App. Total	22.1	68.8	9.2		31.8	51.2	17		10	82	8		13.8	79.9	6.3		
PHF	.875	.937	.882	.931	.913	.948	.809	.937	.771	.943	.868	.930	.779	.909	.712	.923	.971

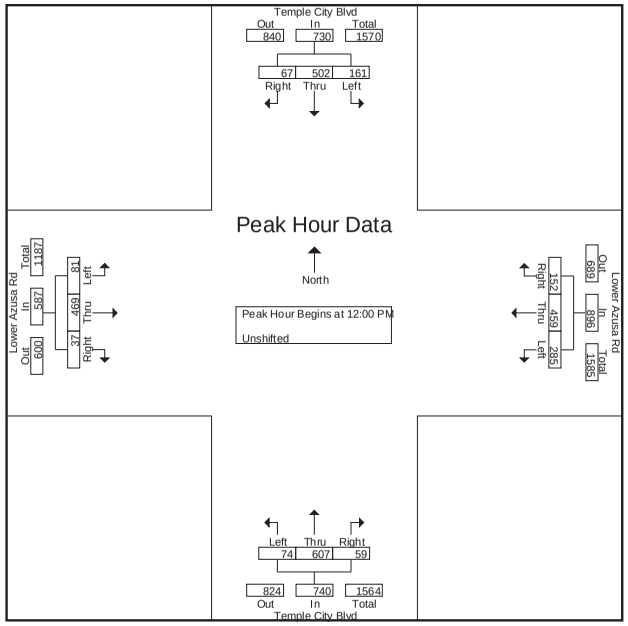

Counts Unlimited Inc.
PO Box 1178
Corona, CA 92878
(951) 268-6268

City of Rosemead
N/S: Temple City Boulevard
E/W: Valley Boulevard
Weather: Sunny

File Name : RMDTCVAAM
Site Code : 00000014
Start Date : 9/12/2012
Page No : 1

Groups Printed- Total Volume

	Temple City Boulevard Southbound				Valley Boulevard Westbound				Temple City Boulevard Northbound				Valley Boulevard Eastbound				
Start Time	Left	Thru	Right	App. Total	Left	Thru	Right	App. Total	Left	Thru	Right	App. Total	Left	Thru	Right	App. Total	Int. Total
07:00 AM	17	107	35	159	14	175	43	232	52	66	8	126	13	69	8	90	607
07:15 AM	30	133	36	199	20	256	45	321	56	70	10	136	13	74	4	91	747
07:30 AM	38	130	59	227	17	295	45	357	65	103	13	181	26	141	10	177	942
07:45 AM	46	100	72	218	15	244	60	319	64	85	16	165	40	162	22	224	926
Total	131	470	202	803	66	970	193	1229	237	324	47	608	92	446	44	582	3222
08:00 AM	38	144	74	256	32	241	39	312	70	86	12	168	39	129	11	179	915
08:15 AM	48	191	60	299	28	292	35	355	68	98	17	183	26	136	11	173	1010
08:30 AM	41	159	49	249	18	297	41	356	60	95	8	163	25	123	14	162	930
08:45 AM	37	135	60	232	17	299	41	357	58	82	11	151	30	110	13	153	893
Total	164	629	243	1036	95	1129	156	1380	256	361	48	665	120	498	49	667	3748
Grand Total	295	1099	445	1839	161	2099	349	2609	493	685	95	1273	212	944	93	1249	6970
Apprch %	16	59.8	24.2		6.2	80.5	13.4		38.7	53.8	7.5		17	75.6	7.4		
Total %	4.2	15.8	6.4	26.4	2.3	30.1	5	37.4	7.1	9.8	1.4	18.3	3	13.5	1.3	17.9	

	Temple City Boulevard Southbound				Valley Boulevard Westbound				Temple City Boulevard Northbound				Valley Boulevard Eastbound				
Start Time	Left	Thru	Right	App. Total	Left	Thru	Right	App. Total	Left	Thru	Right	App. Total	Left	Thru	Right	App. Total	Int. Total
Peak Hour Analysis From 07:00 AM to 08:45 AM - Peak 1 of 1																	
Peak Hour for Entire Intersection Begins at 07:30 AM																	
07:30 AM	38	130	59	227	17	**295**	45	**357**	65	**103**	13	181	26	141	10	177	942
07:45 AM	46	100	72	218	15	244	**60**	319	64	85	16	165	**40**	**162**	**22**	**224**	926
08:00 AM	38	144	**74**	256	**32**	241	39	312	**70**	86	12	168	39	129	11	179	915
08:15 AM	**48**	**191**	60	**299**	28	292	35	355	68	98	**17**	**183**	26	136	11	173	**1010**
Total Volume	170	565	265	1000	92	1072	179	1343	267	372	58	697	131	568	54	753	3793
% App. Total	17	56.5	26.5		6.9	79.8	13.3		38.3	53.4	8.3		17.4	75.4	7.2		
PHF	.885	.740	.895	.836	.719	.908	.746	.940	.954	.903	.853	.952	.819	.877	.614	.840	.939

Counts Unlimited Inc.
PO Box 1178
Corona, CA 92878
(951) 268-6268

City of Rosemead
N/S: Temple City Boulevard
E/W: Valley Boulevard
Weather: Sunny

File Name : RMDTCVAAM
Site Code : 00000014
Start Date : 9/12/2012
Page No : 2

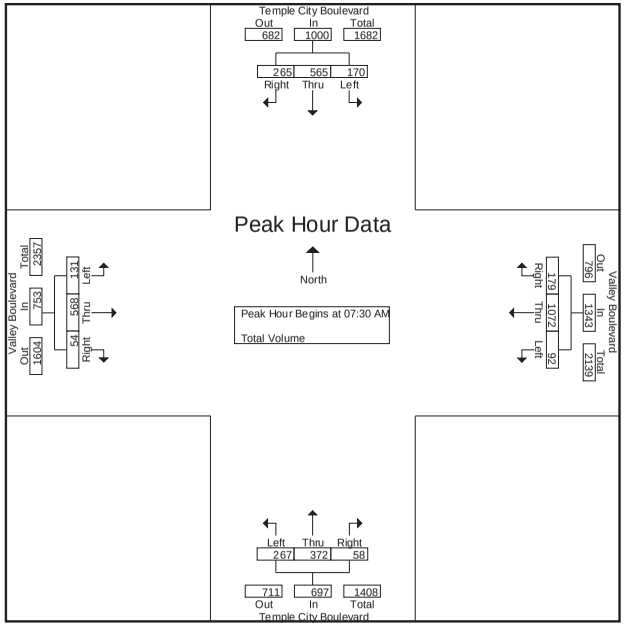

Peak Hour Analysis From 07:00 AM to 08:45 AM - Peak 1 of 1

Peak Hour for Each Approach Begins at:

	08:00 AM				08:00 AM				07:30 AM				07:30 AM			
+0 mins.	38	144	**74**	256	**32**	241	39	312	65	**103**	13	181	26	141	10	177
+15 mins.	**48**	**191**	60	**299**	28	292	35	355	64	85	16	165	**40**	**162**	**22**	**224**
+30 mins.	41	159	49	249	18	297	**41**	356	**70**	86	12	168	39	129	11	179
+45 mins.	37	135	60	232	17	**299**	41	**357**	68	98	**17**	**183**	26	136	11	173
Total Volume	164	629	243	1036	95	1129	156	1380	267	372	58	697	131	568	54	753
% App. Total	15.8	60.7	23.5		6.9	81.8	11.3		38.3	53.4	8.3		17.4	75.4	7.2	
PHF	.854	.823	.821	.866	.742	.944	.951	.966	.954	.903	.853	.952	.819	.877	.614	.840

Counts Unlimited Inc.
PO Box 1178
Corona, CA 92878
(951) 268-6268

City of Rosemead
N/S: Temple City Boulevard
E/W: Valley Boulevard
Weather: Sunny

File Name : RMDTCVAPM
Site Code : 00000014
Start Date : 9/12/2012
Page No : 1

Groups Printed- Total Volume

	Temple City Boulevard Southbound				Valley Boulevard Westbound				Temple City Boulevard Northbound				Valley Boulevard Eastbound				
Start Time	Left	Thru	Right	App. Total	Left	Thru	Right	App. Total	Left	Thru	Right	App. Total	Left	Thru	Right	App. Total	Int. Total
04:00 PM	37	107	30	174	21	101	25	147	18	103	11	132	47	227	20	294	747
04:15 PM	23	99	29	151	13	103	24	140	28	106	12	146	45	191	22	258	695
04:30 PM	31	95	33	159	26	126	32	184	20	105	17	142	60	209	20	289	774
04:45 PM	44	105	21	170	17	108	26	151	20	133	13	166	42	209	15	266	753
Total	135	406	113	654	77	438	107	622	86	447	53	586	194	836	77	1107	2969
05:00 PM	25	107	18	150	27	148	26	201	25	139	23	187	51	239	23	313	851
05:15 PM	35	121	25	181	22	117	26	165	34	164	16	214	47	246	17	310	870
05:30 PM	45	106	31	182	27	150	23	200	24	162	12	198	59	241	11	311	891
05:45 PM	37	97	35	169	17	119	28	164	34	181	19	234	53	240	18	311	878
Total	142	431	109	682	93	534	103	730	117	646	70	833	210	966	69	1245	3490
Grand Total	277	837	222	1336	170	972	210	1352	203	1093	123	1419	404	1802	146	2352	6459
Apprch %	20.7	62.6	16.6		12.6	71.9	15.5		14.3	77	8.7		17.2	76.6	6.2		
Total %	4.3	13	3.4	20.7	2.6	15	3.3	20.9	3.1	16.9	1.9	22	6.3	27.9	2.3	36.4	

	Temple City Boulevard Southbound				Valley Boulevard Westbound				Temple City Boulevard Northbound				Valley Boulevard Eastbound				
Start Time	Left	Thru	Right	App. Total	Left	Thru	Right	App. Total	Left	Thru	Right	App. Total	Left	Thru	Right	App. Total	Int. Total
Peak Hour Analysis From 04:00 PM to 05:45 PM - Peak 1 of 1																	
Peak Hour for Entire Intersection Begins at 05:00 PM																	
05:00 PM	25	107	18	150	**27**	148	26	**201**	25	139	**23**	187	51	239	**23**	**313**	851
05:15 PM	35	**121**	25	181	22	117	26	165	**34**	164	16	214	47	**246**	17	310	870
05:30 PM	**45**	106	31	**182**	27	**150**	23	200	24	162	12	198	**59**	241	11	311	**891**
05:45 PM	37	97	**35**	169	17	119	**28**	164	34	**181**	19	**234**	53	240	18	311	878
Total Volume	142	431	109	682	93	534	103	730	117	646	70	833	210	966	69	1245	3490
% App. Total	20.8	63.2	16		12.7	73.2	14.1		14	77.6	8.4		16.9	77.6	5.5		
PHF	.789	.890	.779	.937	.861	.890	.920	.908	.860	.892	.761	.890	.890	.982	.750	.994	.979

Counts Unlimited Inc.
PO Box 1178
Corona, CA 92878
(951) 268-6268

City of Rosemead
N/S: Temple City Boulevard
E/W: Valley Boulevard
Weather: Sunny

File Name : RMDTCVAPM
Site Code : 00000014
Start Date : 9/12/2012
Page No : 2

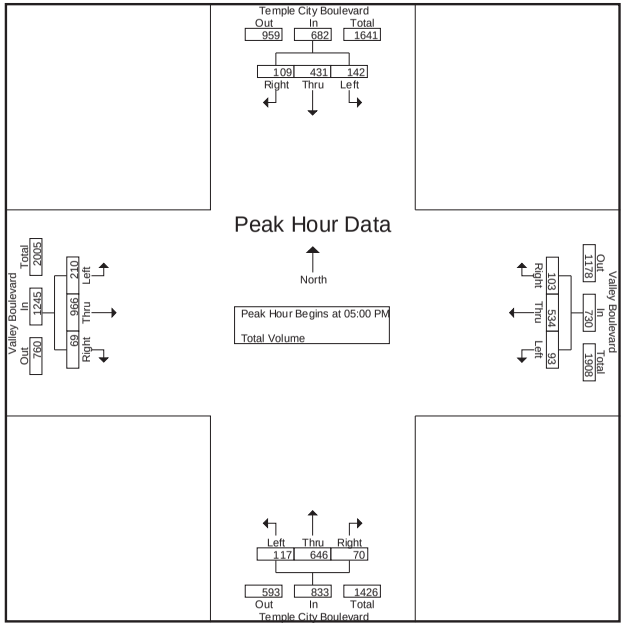

Peak Hour Analysis From 04:00 PM to 05:45 PM - Peak 1 of 1

Peak Hour for Each Approach Begins at:

	04:45 PM				05:00 PM				05:00 PM				05:00 PM			
+0 mins.	44	105	21	170	**27**	148	26	**201**	25	139	**23**	187	51	239	**23**	**313**
+15 mins.	25	107	18	150	22	117	26	165	**34**	164	16	214	47	**246**	17	310
+30 mins.	35	**121**	25	181	27	**150**	23	200	24	162	12	198	**59**	241	11	311
+45 mins.	**45**	106	**31**	**182**	17	119	**28**	164	34	**181**	19	**234**	53	240	18	311
Total Volume	149	439	95	683	93	534	103	730	117	646	70	833	210	966	69	1245
% App. Total	21.8	64.3	13.9		12.7	73.2	14.1		14	77.6	8.4		16.9	77.6	5.5	
PHF	.828	.907	.766	.938	.861	.890	.920	.908	.860	.892	.761	.890	.890	.982	.750	.994

Counts Unlimited Inc.
PO Box 1178
Corona, CA 92878
(951) 268-6268

City of Rosemead
N/S: Temple City Boulevard
E/W: Valley Boulevard
Weather: Sunny

File Name : RMDTCVASAT
Site Code : 00000014
Start Date : 9/15/2012
Page No : 1

Groups Printed- Total Volume

	Temple City Boulevard Southbound				Valley Boulevard Westbound				Temple City Boulevard Northbound				Valley Boulevard Eastbound				
Start Time	Left	Thru	Right	App. Total	Left	Thru	Right	App. Total	Left	Thru	Right	App. Total	Left	Thru	Right	App. Total	Int. Total
12:00 PM	33	114	33	180	21	143	17	181	24	67	13	104	43	161	7	211	676
12:15 PM	27	125	29	181	22	147	28	197	25	97	19	141	36	170	13	219	738
12:30 PM	25	123	33	181	24	126	21	171	21	88	10	119	51	156	12	219	690
12:45 PM	22	115	36	173	25	122	13	160	32	106	14	152	47	163	10	220	705
Total	107	477	131	715	92	538	79	709	102	358	56	516	177	650	42	869	2809
01:00 PM	29	117	22	168	26	142	26	194	15	82	18	115	62	175	13	250	727
01:15 PM	31	119	36	186	22	140	21	183	19	96	16	131	41	178	17	236	736
01:30 PM	30	118	24	172	21	125	25	171	25	56	19	100	67	191	12	270	713
01:45 PM	24	104	36	164	31	115	20	166	24	75	18	117	47	150	11	208	655
Total	114	458	118	690	100	522	92	714	83	309	71	463	217	694	53	964	2831
Grand Total	221	935	249	1405	192	1060	171	1423	185	667	127	979	394	1344	95	1833	5640
Apprch %	15.7	66.5	17.7		13.5	74.5	12		18.9	68.1	13		21.5	73.3	5.2		
Total %	3.9	16.6	4.4	24.9	3.4	18.8	3	25.2	3.3	11.8	2.3	17.4	7	23.8	1.7	32.5	

	Temple City Boulevard Southbound				Valley Boulevard Westbound				Temple City Boulevard Northbound				Valley Boulevard Eastbound				
Start Time	Left	Thru	Right	App. Total	Left	Thru	Right	App. Total	Left	Thru	Right	App. Total	Left	Thru	Right	App. Total	Int. Total
Peak Hour Analysis From 12:00 PM to 01:45 PM - Peak 1 of 1																	
Peak Hour for Entire Intersection Begins at 12:45 PM																	
12:45 PM	22	115	**36**	173	25	122	13	160	**32**	**106**	14	**152**	47	163	10	220	705
01:00 PM	29	117	22	168	**26**	**142**	**26**	**194**	15	82	18	115	62	175	13	250	727
01:15 PM	**31**	**119**	36	**186**	22	140	21	183	19	96	16	131	41	178	**17**	236	**736**
01:30 PM	30	118	24	172	21	125	25	171	25	56	**19**	100	**67**	**191**	12	**270**	713
Total Volume	112	469	118	699	94	529	85	708	91	340	67	498	217	707	52	976	2881
% App. Total	16	67.1	16.9		13.3	74.7	12		18.3	68.3	13.5		22.2	72.4	5.3		
PHF	.903	.985	.819	.940	.904	.931	.817	.912	.711	.802	.882	.819	.810	.925	.765	.904	.979

Counts Unlimited Inc.
PO Box 1178
Corona, CA 92878
(951) 268-6268

City of Rosemead
N/S: Temple City Boulevard
E/W: Valley Boulevard
Weather: Sunny

File Name : RMDTCVASAT
Site Code : 00000014
Start Date : 9/15/2012
Page No : 2

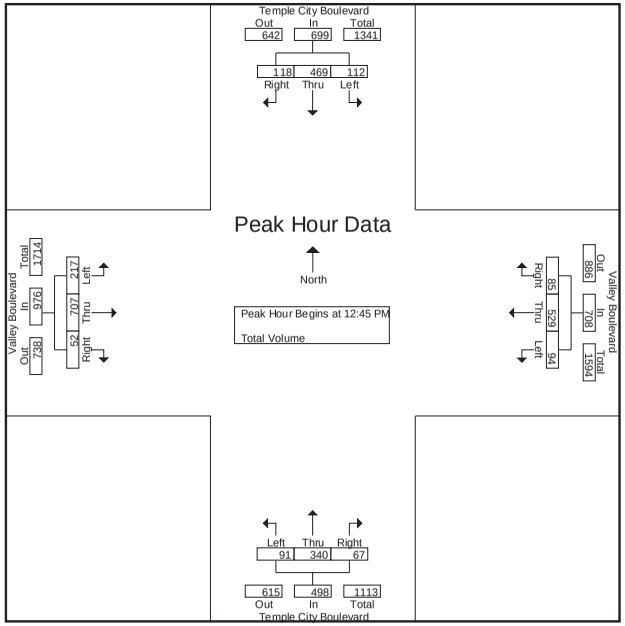

Peak Hour Analysis From 12:00 PM to 01:45 PM - Peak 1 of 1

Peak Hour for Each Approach Begins at:

	12:00 PM				12:15 PM				12:15 PM				12:45 PM			
+0 mins.	**33**	114	33	180	22	**147**	**28**	**197**	25	97	**19**	141	47	163	10	220
+15 mins.	27	**125**	29	**181**	24	126	21	171	21	88	10	119	62	175	13	250
+30 mins.	25	123	33	181	25	122	13	160	**32**	**106**	14	**152**	41	178	**17**	236
+45 mins.	22	115	**36**	173	**26**	142	26	194	15	82	18	115	**67**	**191**	12	**270**
Total Volume	107	477	131	715	97	537	88	722	93	373	61	527	217	707	52	976
% App. Total	15	66.7	18.3		13.4	74.4	12.2		17.6	70.8	11.6		22.2	72.4	5.3	
PHF	.811	.954	.910	.988	.933	.913	.786	.916	.727	.880	.803	.867	.810	.925	.765	.904

CITY TRAFFIC COUNTERS

626.991.7522

www.ctcounters.com

File Name : TC_Loftus
Site Code : 00000000
Start Date : 6/4/2014
Page No : 1

Groups Printed- Unshifted

	Temple City Blvd Southbound			Loftus Dr Westbound			Temple City Blvd Northbound			Loftus Dr Eastbound			
Start Time	Left	Thru	Right	Left	Thru	Right	Left	Thru	Right	Left	Thru	Right	Int. Total
07:00 AM	41	163	0	39	0	21	0	147	50	0	0	0	461
07:15 AM	63	143	0	29	0	15	0	194	47	0	0	0	491
07:30 AM	46	138	0	34	0	19	0	194	26	0	0	0	457
07:45 AM	54	145	0	22	0	12	0	206	16	0	0	0	455
Total	204	589	0	124	0	67	0	741	139	0	0	0	1864
08:00 AM	40	151	0	25	0	10	0	202	21	0	0	0	449
08:15 AM	71	140	0	28	0	16	0	201	21	0	0	0	477
08:30 AM	79	143	0	28	0	4	0	161	35	0	0	0	450
08:45 AM	42	125	0	39	0	12	0	155	36	0	0	0	409
Total	232	559	0	120	0	42	0	719	113	0	0	0	1785
04:00 PM	52	152	0	39	0	26	0	127	23	0	0	0	419
04:15 PM	53	147	0	35	0	25	0	124	31	0	0	0	415
04:30 PM	49	149	0	57	0	27	0	177	28	0	0	0	487
04:45 PM	55	141	0	62	0	44	0	197	31	0	0	0	530
Total	209	589	0	193	0	122	0	625	113	0	0	0	1851
05:00 PM	32	201	0	49	0	25	0	221	20	0	0	0	548
05:15 PM	56	207	0	38	0	26	0	204	20	0	0	0	551
05:30 PM	56	182	0	60	0	53	0	242	29	0	0	0	622
05:45 PM	41	172	0	56	0	73	0	210	38	0	0	0	590
Total	185	762	0	203	0	177	0	877	107	0	0	0	2311
Grand Total	830	2499	0	640	0	408	0	2962	472	0	0	0	7811
Apprch %	24.9	75.1	0	61.1	0	38.9	0	86.3	13.7	0	0	0	
Total %	10.6	32	0	8.2	0	5.2	0	37.9	6	0	0	0	

CITY TRAFFIC COUNTERS

626.991.7522

www.ctcounters.com

File Name : TC_Loftus
Site Code : 00000000
Start Date : 6/4/2014
Page No : 2

	Temple City Blvd Southbound				Loftus Dr Westbound				Temple City Blvd Northbound				Loftus Dr Eastbound				
Start Time	Left	Thru	Right	App. Total	Left	Thru	Right	App. Total	Left	Thru	Right	App. Total	Left	Thru	Right	App. Total	Int. Total
Peak Hour Analysis From 07:00 AM to 11:45 AM - Peak 1 of 1																	
Peak Hour for Entire Intersection Begins at 07:00 AM																	
07:00 AM	41	**163**	0	204	**39**	0	**21**	**60**	0	147	**50**	197	0	0	0	0	461
07:15 AM	**63**	143	0	**206**	29	0	15	44	0	194	47	**241**	0	0	0	0	**491**
07:30 AM	46	138	0	184	34	0	19	53	0	194	26	220	0	0	0	0	457
07:45 AM	54	145	0	199	22	0	12	34	0	**206**	16	222	0	0	0	0	455
Total Volume	204	589	0	793	124	0	67	191	0	741	139	880	0	0	0	0	1864
% App. Total	25.7	74.3	0		64.9	0	35.1		0	84.2	15.8		0	0	0		
PHF	.810	.903	.000	.962	.795	.000	.798	.796	.000	.899	.695	.913	.000	.000	.000	.000	.949

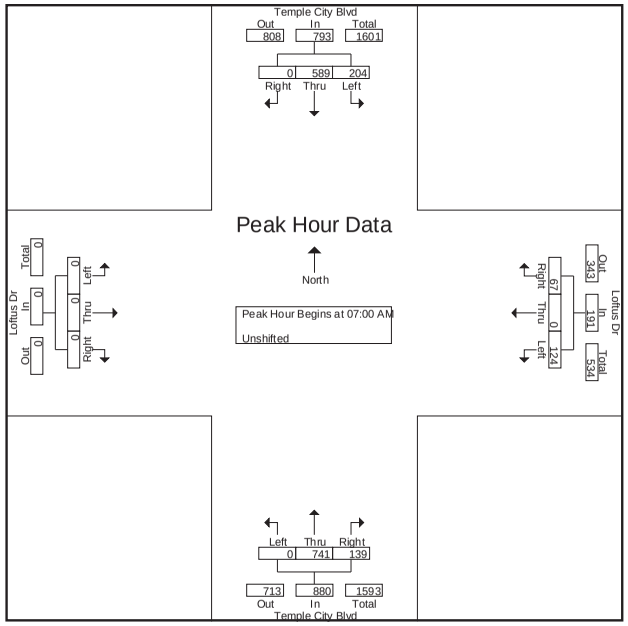

CITY TRAFFIC COUNTERS

626.991.7522

www.ctcounters.com

File Name : TC_Loftus
Site Code : 00000000
Start Date : 6/4/2014
Page No : 3

	Temple City Blvd Southbound				Loftus Dr Westbound				Temple City Blvd Northbound				Loftus Dr Eastbound				
Start Time	Left	Thru	Right	App. Total	Left	Thru	Right	App. Total	Left	Thru	Right	App. Total	Left	Thru	Right	App. Total	Int. Total
Peak Hour Analysis From 12:00 PM to 05:45 PM - Peak 1 of 1																	
Peak Hour for Entire Intersection Begins at 05:00 PM																	
05:00 PM	32	201	0	233	49	0	25	74	0	221	20	241	0	0	0	0	548
05:15 PM	**56**	**207**	0	**263**	38	0	26	64	0	204	20	224	0	0	0	0	551
05:30 PM	56	182	0	238	**60**	0	53	113	0	**242**	29	**271**	0	0	0	0	**622**
05:45 PM	41	172	0	213	56	0	**73**	**129**	0	210	**38**	248	0	0	0	0	590
Total Volume	185	762	0	947	203	0	177	380	0	877	107	984	0	0	0	0	2311
% App. Total	19.5	80.5	0		53.4	0	46.6		0	89.1	10.9		0	0	0		
PHF	.826	.920	.000	.900	.846	.000	.606	.736	.000	.906	.704	.908	.000	.000	.000	.000	.929

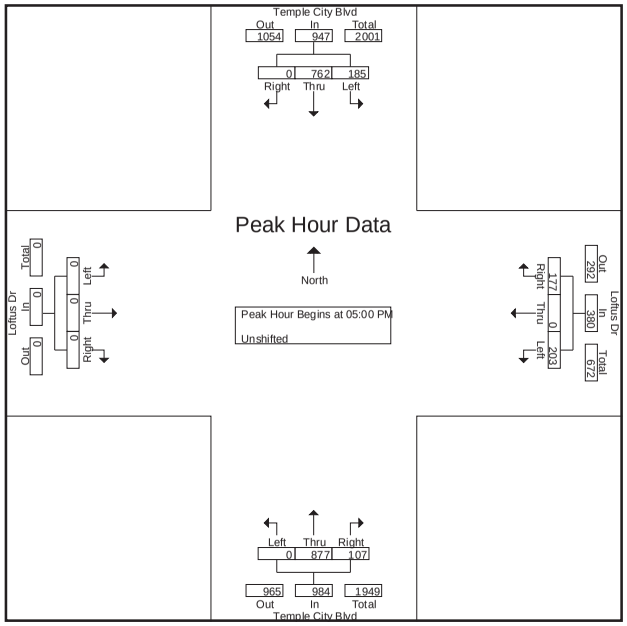

CITY TRAFFIC COUNTERS

626.991.7522

www.ctcounters.com

File Name : TempleCity_Loftus_Sat
Site Code : 00000000
Start Date : 6/7/2014
Page No : 1

Groups Printed- Unshifted

	Temple City Blvd Southbound			Loftus Dr Westbound			Temple City Blvd Northbound			Eastbound			
Start Time	Left	Thru	Right	Left	Thru	Right	Left	Thru	Right	Left	Thru	Right	Int. Total
12:00 PM	43	161	0	49	0	18	0	196	44	0	0	0	511
12:15 PM	46	160	0	36	0	21	0	157	31	0	0	0	451
12:30 PM	48	140	0	43	0	27	0	121	37	0	0	0	416
12:45 PM	51	166	0	46	0	24	0	139	36	0	0	0	462
Total	188	627	0	174	0	90	0	613	148	0	0	0	1840
01:00 PM	45	160	0	42	0	29	0	157	39	0	0	0	472
01:15 PM	71	166	0	45	0	37	0	158	33	0	0	0	510
01:30 PM	72	140	0	44	0	20	0	159	27	0	0	0	462
01:45 PM	47	180	0	45	0	27	0	177	39	0	0	0	515
Total	235	646	0	176	0	113	0	651	138	0	0	0	1959
Grand Total	423	1273	0	350	0	203	0	1264	286	0	0	0	3799
Apprch %	24.9	75.1	0	63.3	0	36.7	0	81.5	18.5	0	0	0	
Total %	11.1	33.5	0	9.2	0	5.3	0	33.3	7.5	0	0	0	

CITY TRAFFIC COUNTERS

626.991.7522

www.ctcounters.com

File Name : TempleCity_Loftus_Sat
Site Code : 00000000
Start Date : 6/7/2014
Page No : 2

	Temple City Blvd Southbound				Loftus Dr Westbound				Temple City Blvd Northbound				Eastbound				
Start Time	Left	Thru	Right	App. Total	Left	Thru	Right	App. Total	Left	Thru	Right	App. Total	Left	Thru	Right	App. Total	Int. Total
Peak Hour Analysis From 12:00 PM to 12:45 PM - Peak 1 of 1																	
Peak Hour for Entire Intersection Begins at 12:00 PM																	
12:00 PM	43	161	0	204	**49**	0	18	67	0	**196**	**44**	**240**	0	0	0	0	**511**
12:15 PM	46	160	0	206	36	0	21	57	0	157	31	188	0	0	0	0	451
12:30 PM	48	140	0	188	43	0	**27**	**70**	0	121	37	158	0	0	0	0	416
12:45 PM	**51**	**166**	0	**217**	46	0	24	70	0	139	36	175	0	0	0	0	462
Total Volume	188	627	0	815	174	0	90	264	0	613	148	761	0	0	0	0	1840
% App. Total	23.1	76.9	0		65.9	0	34.1		0	80.6	19.4		0	0	0		
PHF	.922	.944	.000	.939	.888	.000	.833	.943	.000	.782	.841	.793	.000	.000	.000	.000	.900

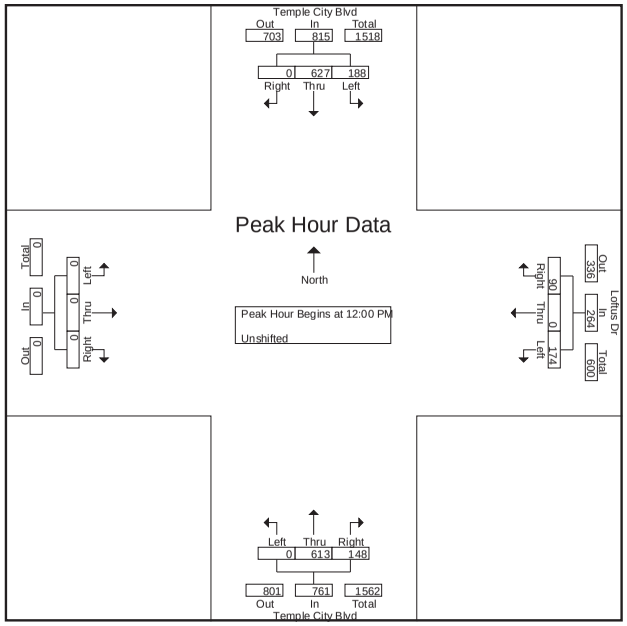

CITY TRAFFIC COUNTERS

626.991.7522

www.ctcounters.com

File Name : TC_10WB
Site Code : 00000000
Start Date : 6/4/2014
Page No : 1

Groups Printed- Unshifted

	Temple City Blvd Southbound			I-10 WB Ramps Westbound			Temple City Blvd Northbound			I-10 WB Ramps Eastbound			
Start Time	Left	Thru	Right	Left	Thru	Right	Left	Thru	Right	Left	Thru	Right	Int. Total
07:00 AM	0	185	16	0	0	0	0	202	0	0	0	5	408
07:15 AM	0	157	17	0	0	0	0	240	0	0	0	3	417
07:30 AM	0	144	28	0	0	0	0	224	0	0	0	8	404
07:45 AM	0	134	30	0	0	0	0	226	0	0	0	12	402
Total	0	620	91	0	0	0	0	892	0	0	0	28	1631
08:00 AM	0	156	23	0	0	0	0	227	0	0	0	5	411
08:15 AM	0	156	13	0	0	0	0	220	0	0	0	7	396
08:30 AM	0	163	14	0	0	0	0	194	0	0	0	14	385
08:45 AM	0	153	9	0	0	0	0	199	0	0	0	8	369
Total	0	628	59	0	0	0	0	840	0	0	0	34	1561
04:00 PM	0	184	4	0	0	0	0	154	0	0	0	0	342
04:15 PM	0	173	6	0	0	0	0	159	0	0	0	0	338
04:30 PM	0	200	4	0	0	0	0	205	0	0	0	2	411
04:45 PM	0	196	4	0	0	0	0	230	0	0	0	2	432
Total	0	753	18	0	0	0	0	748	0	0	0	4	1523
05:00 PM	0	249	3	0	0	0	0	244	0	0	0	3	499
05:15 PM	0	239	4	0	0	0	0	225	0	0	0	3	471
05:30 PM	0	237	6	0	0	0	0	280	0	0	0	3	526
05:45 PM	0	220	7	0	0	0	0	236	0	0	0	8	471
Total	0	945	20	0	0	0	0	985	0	0	0	17	1967
Grand Total	0	2946	188	0	0	0	0	3465	0	0	0	83	6682
Apprch %	0	94	6	0	0	0	0	100	0	0	0	100	
Total %	0	44.1	2.8	0	0	0	0	51.9	0	0	0	1.2	

CITY TRAFFIC COUNTERS

626.991.7522

www.ctcounters.com

File Name : TC_10WB
Site Code : 00000000
Start Date : 6/4/2014
Page No : 2

	Temple City Blvd Southbound				I-10 WB Ramps Westbound				Temple City Blvd Northbound				I-10 WB Ramps Eastbound				
Start Time	Left	Thru	Right	App. Total	Left	Thru	Right	App. Total	Left	Thru	Right	App. Total	Left	Thru	Right	App. Total	Int. Total
Peak Hour Analysis From 07:00 AM to 11:45 AM - Peak 1 of 1																	
Peak Hour for Entire Intersection Begins at 07:15 AM																	
07:15 AM	0	**157**	17	174	0	0	0	0	0	**240**	0	**240**	0	0	3	3	**417**
07:30 AM	0	144	28	172	0	0	0	0	0	224	0	224	0	0	8	8	404
07:45 AM	0	134	**30**	164	0	0	0	0	0	226	0	226	0	0	**12**	**12**	402
08:00 AM	0	156	23	**179**	0	0	0	0	0	227	0	227	0	0	5	5	411
Total Volume	0	591	98	689	0	0	0	0	0	917	0	917	0	0	28	28	1634
% App. Total	0	85.8	14.2		0	0	0		0	100	0		0	0	100		
PHF	.000	.941	.817	.962	.000	.000	.000	.000	.000	.955	.000	.955	.000	.000	.583	.583	.980

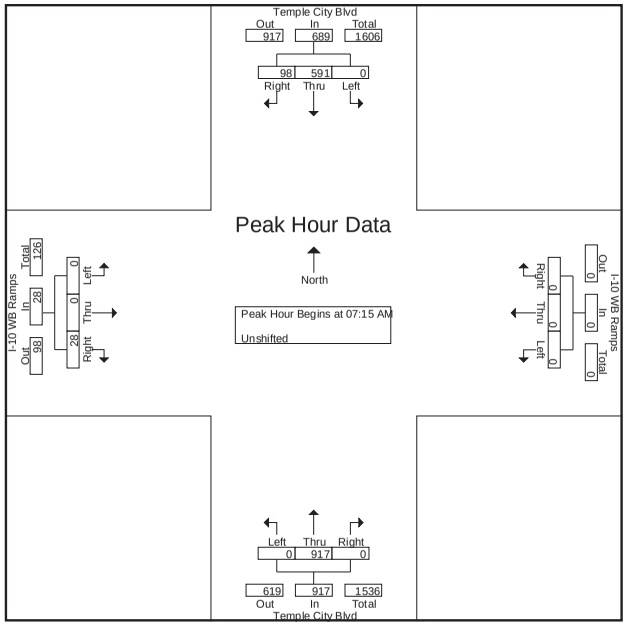

CITY TRAFFIC COUNTERS
626.991.7522
www.ctcounters.com

File Name : TC_10WB
Site Code : 00000000
Start Date : 6/4/2014
Page No : 3

	Temple City Blvd Southbound				I-10 WB Ramps Westbound				Temple City Blvd Northbound				I-10 WB Ramps Eastbound				
Start Time	Left	Thru	Right	App. Total	Left	Thru	Right	App. Total	Left	Thru	Right	App. Total	Left	Thru	Right	App. Total	Int. Total
Peak Hour Analysis From 12:00 PM to 05:45 PM - Peak 1 of 1																	
Peak Hour for Entire Intersection Begins at 05:00 PM																	
05:00 PM	0	**249**	3	**252**	0	0	0	0	0	244	0	244	0	0	3	3	499
05:15 PM	0	239	4	243	0	0	0	0	0	225	0	225	0	0	3	3	471
05:30 PM	0	237	6	243	0	0	0	0	0	**280**	0	**280**	0	0	3	3	**526**
05:45 PM	0	220	**7**	227	0	0	0	0	0	236	0	236	0	0	**8**	**8**	471
Total Volume	0	945	20	965	0	0	0	0	0	985	0	985	0	0	17	17	1967
% App. Total	0	97.9	2.1		0	0	0		0	100	0		0	0	100		
PHF	.000	.949	.714	.957	.000	.000	.000	.000	.000	.879	.000	.879	.000	.000	.531	.531	.935

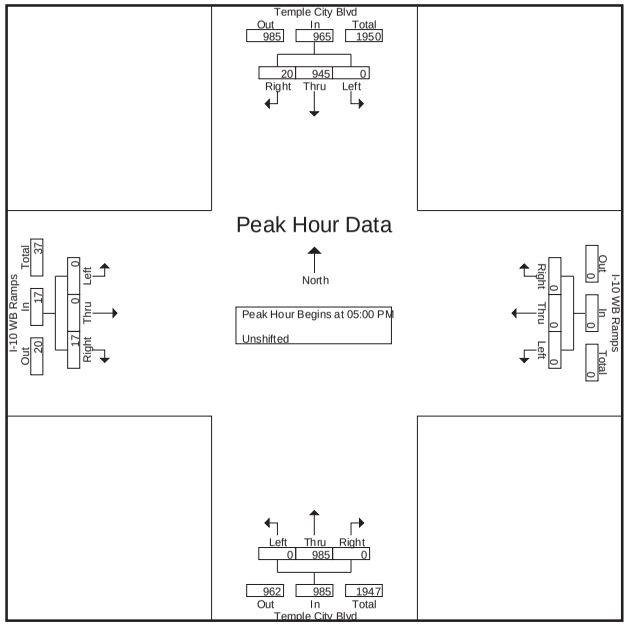

CITY TRAFFIC COUNTERS
626.991.7522
www.ctcounters.com

File Name : TempleCity_10FrwyWBon-off_Sat
Site Code : 00000000
Start Date : 6/7/2014
Page No : 1

Groups Printed- Unshifted

	Temple City Blvd Southbound			Westbound			I-10 WB Ramps Northbound			Eastbound			
Start Time	Left	Thru	Right	Left	Thru	Right	Left	Thru	Right	Left	Thru	Right	Int. Total
12:00 PM	0	201	10	0	0	0	0	241	0	0	0	2	454
12:15 PM	0	190	5	0	0	0	0	187	0	0	0	5	387
12:30 PM	0	179	5	0	0	0	0	158	0	0	0	5	347
12:45 PM	0	207	4	0	0	0	0	175	0	0	0	3	389
Total	0	777	24	0	0	0	0	761	0	0	0	15	1577
01:00 PM	0	189	10	0	0	0	0	192	0	0	0	1	392
01:15 PM	0	193	16	0	0	0	0	190	0	0	0	6	405
01:30 PM	0	173	11	0	0	0	0	184	0	0	0	9	377
01:45 PM	0	212	12	0	0	0	0	217	0	0	0	3	444
Total	0	767	49	0	0	0	0	783	0	0	0	19	1618
Grand Total	0	1544	73	0	0	0	0	1544	0	0	0	34	3195
Apprch %	0	95.5	4.5	0	0	0	0	100	0	0	0	100	
Total %	0	48.3	2.3	0	0	0	0	48.3	0	0	0	1.1	

CITY TRAFFIC COUNTERS

626.991.7522

www.ctcounters.com

File Name : TempleCity_10FrwyWBon-off_Sat
Site Code : 00000000
Start Date : 6/7/2014
Page No : 2

	Temple City Blvd Southbound				Westbound				I-10 WB Ramps Northbound				Eastbound				
Start Time	Left	Thru	Right	App. Total	Left	Thru	Right	App. Total	Left	Thru	Right	App. Total	Left	Thru	Right	App. Total	Int. Total
Peak Hour Analysis From 12:00 PM to 01:45 PM - Peak 1 of 1																	
Peak Hour for Entire Intersection Begins at 01:00 PM																	
01:00 PM	0	189	10	199	0	0	0	0	0	192	0	192	0	0	1	1	392
01:15 PM	0	193	**16**	209	0	0	0	0	0	190	0	190	0	0	6	6	405
01:30 PM	0	173	11	184	0	0	0	0	0	184	0	184	0	0	**9**	**9**	377
01:45 PM	0	**212**	12	**224**	0	0	0	0	0	**217**	0	**217**	0	0	3	3	**444**
Total Volume	0	767	49	816	0	0	0	0	0	783	0	783	0	0	19	19	1618
% App. Total	0	94	6		0	0	0		0	100	0		0	0	100		
PHF	.000	.904	.766	.911	.000	.000	.000	.000	.000	.902	.000	.902	.000	.000	.528	.528	.911

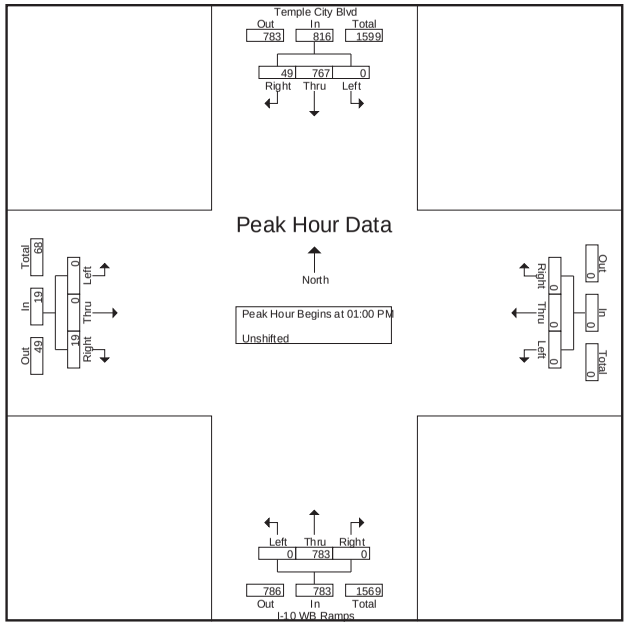

Counts Unlimited Inc.
PO Box 1178
Corona, CA 92878
(951) 268-6268

City of El Monte
N/S: Baldwin Avenue
E/W: Valley Boulevard
Weather: Sunny

File Name : ELMBAVAAM
Site Code : 00000014
Start Date : 9/13/2012
Page No : 1

Groups Printed- Total Volume

	Baldwin Avenue Southbound				Valley Boulevard Westbound				Baldwin Avenue Northbound				Valley Boulevard Eastbound				
Start Time	Left	Thru	Right	App. Total	Left	Thru	Right	App. Total	Left	Thru	Right	App. Total	Left	Thru	Right	App. Total	Int. Total
07:00 AM	15	149	12	176	26	195	21	242	16	75	20	111	11	62	29	102	631
07:15 AM	15	170	14	199	47	280	25	352	27	80	20	127	15	90	30	135	813
07:30 AM	20	188	17	225	37	267	24	328	48	155	48	251	9	105	42	156	960
07:45 AM	35	212	17	264	62	260	35	357	15	141	44	200	19	143	54	216	1037
Total	85	719	60	864	172	1002	105	1279	106	451	132	689	54	400	155	609	3441
08:00 AM	43	216	25	284	48	247	30	325	24	147	32	203	13	120	45	178	990
08:15 AM	45	200	25	270	51	256	32	339	13	111	34	158	23	138	51	212	979
08:30 AM	23	186	24	233	39	223	35	297	16	129	36	181	25	125	38	188	899
08:45 AM	33	180	32	245	48	202	31	281	26	120	23	169	27	112	43	182	877
Total	144	782	106	1032	186	928	128	1242	79	507	125	711	88	495	177	760	3745
Grand Total	229	1501	166	1896	358	1930	233	2521	185	958	257	1400	142	895	332	1369	7186
Apprch %	12.1	79.2	8.8		14.2	76.6	9.2		13.2	68.4	18.4		10.4	65.4	24.3		
Total %	3.2	20.9	2.3	26.4	5	26.9	3.2	35.1	2.6	13.3	3.6	19.5	2	12.5	4.6	19.1	

	Baldwin Avenue Southbound				Valley Boulevard Westbound				Baldwin Avenue Northbound				Valley Boulevard Eastbound				
Start Time	Left	Thru	Right	App. Total	Left	Thru	Right	App. Total	Left	Thru	Right	App. Total	Left	Thru	Right	App. Total	Int. Total
Peak Hour Analysis From 07:00 AM to 07:45 AM - Peak 1 of 1																	
Peak Hour for Entire Intersection Begins at 07:00 AM																	
07:00 AM	15	149	12	176	26	195	21	242	16	75	20	111	11	62	29	102	631
07:15 AM	15	170	14	199	47	**280**	25	352	27	80	20	127	15	90	30	135	813
07:30 AM	20	188	**17**	225	37	267	24	328	**48**	**155**	**48**	**251**	9	105	42	156	960
07:45 AM	**35**	**212**	17	**264**	**62**	260	**35**	**357**	15	141	44	200	**19**	**143**	**54**	**216**	**1037**
Total Volume	85	719	60	864	172	1002	105	1279	106	451	132	689	54	400	155	609	3441
% App. Total	9.8	83.2	6.9		13.4	78.3	8.2		15.4	65.5	19.2		8.9	65.7	25.5		
PHF	.607	.848	.882	.818	.694	.895	.750	.896	.552	.727	.688	.686	.711	.699	.718	.705	.830

Counts Unlimited Inc.
PO Box 1178
Corona, CA 92878
(951) 268-6268

City of El Monte
N/S: Baldwin Avenue
E/W: Valley Boulevard
Weather: Sunny

File Name : ELMBAVAAM
Site Code : 00000014
Start Date : 9/13/2012
Page No : 2

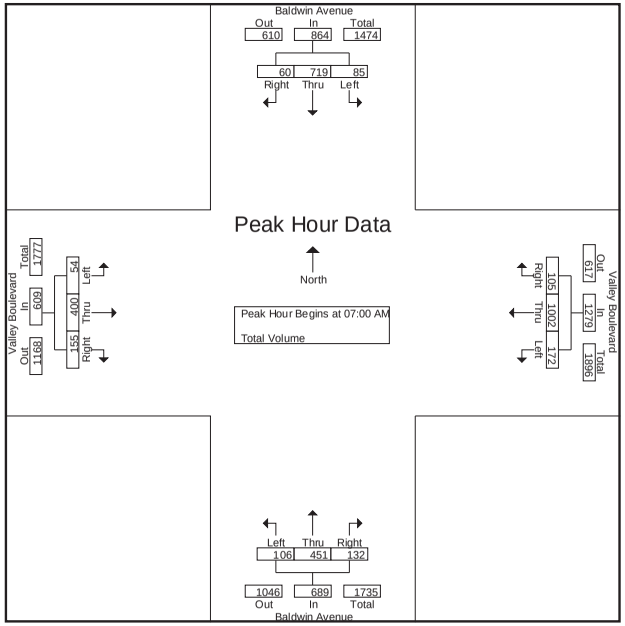

Peak Hour Analysis From 07:00 AM to 07:45 AM - Peak 1 of 1

Peak Hour for Each Approach Begins at:

	07:00 AM				07:00 AM				07:00 AM				07:00 AM			
+0 mins.	15	149	12	176	26	195	21	242	16	75	20	111	11	62	29	102
+15 mins.	15	170	14	199	47	**280**	25	352	27	80	20	127	15	90	30	135
+30 mins.	20	188	**17**	225	37	267	24	328	**48**	**155**	**48**	**251**	9	105	42	156
+45 mins.	**35**	**212**	17	**264**	**62**	260	**35**	**357**	15	141	44	200	**19**	**143**	**54**	**216**
Total Volume	85	719	60	864	172	1002	105	1279	106	451	132	689	54	400	155	609
% App. Total	9.8	83.2	6.9		13.4	78.3	8.2		15.4	65.5	19.2		8.9	65.7	25.5	
PHF	.607	.848	.882	.818	.694	.895	.750	.896	.552	.727	.688	.686	.711	.699	.718	.705

Counts Unlimited Inc.
PO Box 1178
Corona, CA 92878
(951) 268-6268

City of El Monte
N/S: Baldwin Avenue
E/W: Valley Boulevard
Weather: Sunny

File Name : ELMBAVAPM
Site Code : 00000014
Start Date : 9/13/2012
Page No : 1

Groups Printed- Total Volume

	Baldwin Avenue Southbound				Valley Boulevard Westbound				Baldwin Avenue Northbound				Valley Boulevard Eastbound				
Start Time	Left	Thru	Right	App. Total	Left	Thru	Right	App. Total	Left	Thru	Right	App. Total	Left	Thru	Right	App. Total	Int. Total
04:00 PM	38	98	28	164	17	126	47	190	19	180	58	257	33	221	20	274	885
04:15 PM	37	127	26	190	25	125	35	185	13	184	67	264	30	204	25	259	898
04:30 PM	33	140	25	198	32	119	27	178	15	165	46	226	28	217	16	261	863
04:45 PM	43	102	27	172	34	110	31	175	17	194	41	252	31	189	25	245	844
Total	151	467	106	724	108	480	140	728	64	723	212	999	122	831	86	1039	3490
05:00 PM	25	148	34	207	32	137	36	205	22	207	46	275	25	220	18	263	950
05:15 PM	37	120	24	181	35	133	35	203	23	202	55	280	22	243	26	291	955
05:30 PM	29	103	36	168	35	146	31	212	22	215	41	278	28	209	29	266	924
05:45 PM	40	125	17	182	30	136	31	197	26	208	39	273	35	235	33	303	955
Total	131	496	111	738	132	552	133	817	93	832	181	1106	110	907	106	1123	3784
Grand Total	282	963	217	1462	240	1032	273	1545	157	1555	393	2105	232	1738	192	2162	7274
Apprch %	19.3	65.9	14.8		15.5	66.8	17.7		7.5	73.9	18.7		10.7	80.4	8.9		
Total %	3.9	13.2	3	20.1	3.3	14.2	3.8	21.2	2.2	21.4	5.4	28.9	3.2	23.9	2.6	29.7	

	Baldwin Avenue Southbound				Valley Boulevard Westbound				Baldwin Avenue Northbound				Valley Boulevard Eastbound				
Start Time	Left	Thru	Right	App. Total	Left	Thru	Right	App. Total	Left	Thru	Right	App. Total	Left	Thru	Right	App. Total	Int. Total
Peak Hour Analysis From 04:00 PM to 05:45 PM - Peak 1 of 1																	
Peak Hour for Entire Intersection Begins at 05:00 PM																	
05:00 PM	25	**148**	34	**207**	32	137	**36**	205	22	207	46	275	25	220	18	263	950
05:15 PM	37	120	24	181	**35**	133	35	203	23	202	**55**	**280**	22	**243**	26	291	**955**
05:30 PM	29	103	**36**	168	35	**146**	31	**212**	22	**215**	41	278	28	209	29	266	924
05:45 PM	**40**	125	17	182	30	136	31	197	**26**	208	39	273	**35**	235	**33**	**303**	955
Total Volume	131	496	111	738	132	552	133	817	93	832	181	1106	110	907	106	1123	3784
% App. Total	17.8	67.2	15		16.2	67.6	16.3		8.4	75.2	16.4		9.8	80.8	9.4		
PHF	.819	.838	.771	.891	.943	.945	.924	.963	.894	.967	.823	.988	.786	.933	.803	.927	.991

Counts Unlimited Inc.
PO Box 1178
Corona, CA 92878
(951) 268-6268

City of El Monte
N/S: Baldwin Avenue
E/W: Valley Boulevard
Weather: Sunny

File Name : ELMBAVAPM
Site Code : 00000014
Start Date : 9/13/2012
Page No : 2

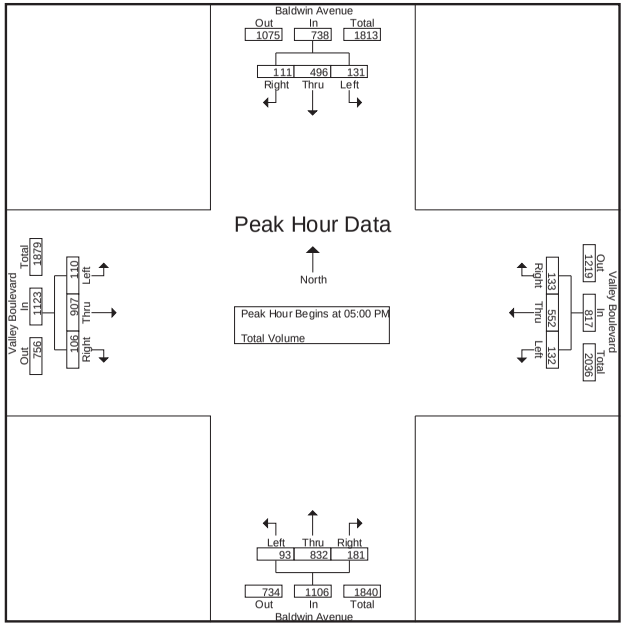

Peak Hour Analysis From 04:00 PM to 05:45 PM - Peak 1 of 1

Peak Hour for Each Approach Begins at:

	04:15 PM				05:00 PM				05:00 PM				05:00 PM			
+0 mins.	37	127	26	190	32	137	**36**	205	22	207	46	275	25	220	18	263
+15 mins.	33	140	25	198	**35**	133	35	203	23	202	**55**	**280**	22	**243**	26	291
+30 mins.	**43**	102	27	172	35	**146**	31	**212**	22	**215**	41	278	28	209	29	266
+45 mins.	25	**148**	**34**	**207**	30	136	31	197	**26**	208	39	273	**35**	235	**33**	**303**
Total Volume	138	517	112	767	132	552	133	817	93	832	181	1106	110	907	106	1123
% App. Total	18	67.4	14.6		16.2	67.6	16.3		8.4	75.2	16.4		9.8	80.8	9.4	
PHF	.802	.873	.824	.926	.943	.945	.924	.963	.894	.967	.823	.988	.786	.933	.803	.927

Counts Unlimited Inc.
PO Box 1178
Corona, CA 92878
(951) 268-6268

City of El Monte
N/S: Baldwin Avenue
E/W: Valley Boulevard
Weather: Sunny

File Name : ELMBAVASAT
Site Code : 00000035
Start Date : 9/15/2012
Page No : 1

Groups Printed- Total Volume

	Baldwin Avenue Southbound				Valley Boulevard Westbound				Baldwin Avenue Northbound				Valley Boulevard Eastbound				
Start Time	Left	Thru	Right	App. Total	Left	Thru	Right	App. Total	Left	Thru	Right	App. Total	Left	Thru	Right	App. Total	Int. Total
12:00 PM	25	153	45	223	33	150	32	215	13	154	37	204	36	138	32	206	848
12:15 PM	38	135	34	207	40	138	25	203	12	182	34	228	34	148	33	215	853
12:30 PM	25	135	26	186	38	125	24	187	17	166	36	219	36	128	23	187	779
12:45 PM	30	153	31	214	29	136	32	197	16	165	38	219	36	126	23	185	815
Total	118	576	136	830	140	549	113	802	58	667	145	870	142	540	111	793	3295
01:00 PM	30	151	31	212	32	141	35	208	16	139	24	179	28	132	28	188	787
01:15 PM	21	158	35	214	22	118	23	163	13	154	41	208	32	126	27	185	770
01:30 PM	23	159	20	202	25	137	30	192	13	137	38	188	40	138	29	207	789
01:45 PM	29	126	26	181	33	139	21	193	15	151	47	213	29	133	23	185	772
Total	103	594	112	809	112	535	109	756	57	581	150	788	129	529	107	765	3118
Grand Total	221	1170	248	1639	252	1084	222	1558	115	1248	295	1658	271	1069	218	1558	6413
Apprch %	13.5	71.4	15.1		16.2	69.6	14.2		6.9	75.3	17.8		17.4	68.6	14		
Total %	3.4	18.2	3.9	25.6	3.9	16.9	3.5	24.3	1.8	19.5	4.6	25.9	4.2	16.7	3.4	24.3	

	Baldwin Avenue Southbound				Valley Boulevard Westbound				Baldwin Avenue Northbound				Valley Boulevard Eastbound				
Start Time	Left	Thru	Right	App. Total	Left	Thru	Right	App. Total	Left	Thru	Right	App. Total	Left	Thru	Right	App. Total	Int. Total
Peak Hour Analysis From 12:00 PM to 01:45 PM - Peak 1 of 1																	
Peak Hour for Entire Intersection Begins at 12:00 PM																	
12:00 PM	25	**153**	**45**	**223**	33	**150**	**32**	**215**	13	154	37	204	**36**	138	32	206	848
12:15 PM	**38**	135	34	207	**40**	138	25	203	12	**182**	34	**228**	34	**148**	**33**	**215**	**853**
12:30 PM	25	135	26	186	38	125	24	187	**17**	166	36	219	36	128	23	187	779
12:45 PM	30	153	31	214	29	136	32	197	16	165	**38**	219	36	126	23	185	815
Total Volume	118	576	136	830	140	549	113	802	58	667	145	870	142	540	111	793	3295
% App. Total	14.2	69.4	16.4		17.5	68.5	14.1		6.7	76.7	16.7		17.9	68.1	14		
PHF	.776	.941	.756	.930	.875	.915	.883	.933	.853	.916	.954	.954	.986	.912	.841	.922	.966

Counts Unlimited Inc.
PO Box 1178
Corona, CA 92878
(951) 268-6268

City of El Monte
N/S: Baldwin Avenue
E/W: Valley Boulevard
Weather: Sunny

File Name : ELMBAVASAT
Site Code : 00000035
Start Date : 9/15/2012
Page No : 2

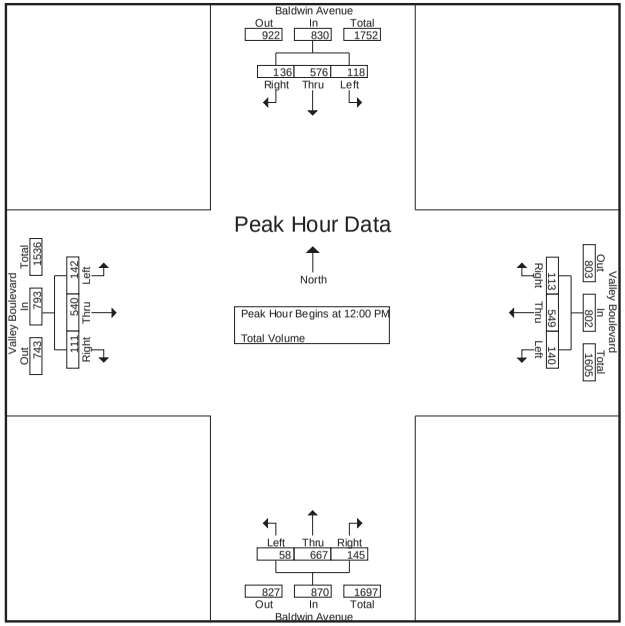

Peak Hour Analysis From 12:00 PM to 01:45 PM - Peak 1 of 1

Peak Hour for Each Approach Begins at:

	12:45 PM				12:00 PM				12:00 PM				12:00 PM			
+0 mins.	**30**	153	31	**214**	33	**150**	**32**	**215**	13	154	37	204	**36**	138	32	206
+15 mins.	30	151	31	212	**40**	138	25	203	12	**182**	34	**228**	34	**148**	**33**	**215**
+30 mins.	21	158	**35**	214	38	125	24	187	**17**	166	36	219	36	128	23	187
+45 mins.	23	**159**	20	202	29	136	32	197	16	165	**38**	219	36	126	23	185
Total Volume	104	621	117	842	140	549	113	802	58	667	145	870	142	540	111	793
% App. Total	12.4	73.8	13.9		17.5	68.5	14.1		6.7	76.7	16.7		17.9	68.1	14	
PHF	.867	.976	.836	.984	.875	.915	.883	.933	.853	.916	.954	.954	.986	.912	.841	.922

CITY TRAFFIC COUNTERS

626.991.7522

www.ctcounters.com

File Name : BaldwinLoftus
Site Code : 00000000
Start Date : 6/4/2014
Page No : 1

Groups Printed- Unshifted

	Baldwin Ave Southbound			Loftus Dr Westbound			Baldwin Ave Northbound			Loftus Dr Eastbound			
Start Time	Left	Thru	Right	Left	Thru	Right	Left	Thru	Right	Left	Thru	Right	Int. Total
07:00 AM	4	96	21	41	16	3	11	84	12	8	7	90	393
07:15 AM	0	122	29	41	15	5	12	100	12	12	8	112	468
07:30 AM	2	131	28	57	27	4	13	106	16	5	2	136	527
07:45 AM	0	171	41	66	17	0	21	153	20	11	13	110	623
Total	6	520	119	205	75	12	57	443	60	36	30	448	2011
08:00 AM	0	152	24	69	21	2	13	101	17	17	8	158	582
08:15 AM	0	162	28	60	11	3	17	129	13	11	9	138	581
08:30 AM	0	155	22	67	14	2	12	91	9	24	8	142	546
08:45 AM	0	151	20	42	15	1	19	104	16	14	14	148	544
Total	0	620	94	238	61	8	61	425	55	66	39	586	2253
04:00 PM	5	53	36	9	10	4	52	137	18	9	8	75	416
04:15 PM	2	56	20	13	11	10	51	144	22	19	9	67	424
04:30 PM	1	46	33	14	24	6	34	174	19	15	15	75	456
04:45 PM	2	52	45	7	20	4	50	221	22	15	14	82	534
Total	10	207	134	43	65	24	187	676	81	58	46	299	1830
05:00 PM	3	41	32	17	29	4	80	220	46	15	5	51	543
05:15 PM	3	55	36	18	20	2	70	222	38	17	15	70	566
05:30 PM	0	34	45	11	18	5	92	228	32	25	12	87	589
05:45 PM	1	42	43	10	22	8	96	226	30	17	22	68	585
Total	7	172	156	56	89	19	338	896	146	74	54	276	2283
Grand Total	23	1519	503	542	290	63	643	2440	342	234	169	1609	8377
Apprch %	1.1	74.3	24.6	60.6	32.4	7	18.8	71.2	10	11.6	8.4	80	
Total %	0.3	18.1	6	6.5	3.5	0.8	7.7	29.1	4.1	2.8	2	19.2	

CITY TRAFFIC COUNTERS

626.991.7522

www.ctcounters.com

File Name : BaldwinLoftus
Site Code : 00000000
Start Date : 6/4/2014
Page No : 2

	Baldwin Ave Southbound				Loftus Dr Westbound				Baldwin Ave Northbound				Loftus Dr Eastbound				
Start Time	Left	Thru	Right	App. Total	Left	Thru	Right	App. Total	Left	Thru	Right	App. Total	Left	Thru	Right	App. Total	Int. Total
Peak Hour Analysis From 07:00 AM to 11:45 AM - Peak 1 of 1																	
Peak Hour for Entire Intersection Begins at 07:45 AM																	
07:45 AM	0	**171**	**41**	**212**	66	17	0	83	**21**	**153**	**20**	**194**	11	**13**	110	134	**623**
08:00 AM	0	152	24	176	**69**	**21**	2	**92**	13	101	17	131	17	8	**158**	**183**	582
08:15 AM	0	162	28	190	60	11	**3**	74	17	129	13	159	11	9	138	158	581
08:30 AM	0	155	22	177	67	14	2	83	12	91	9	112	**24**	8	142	174	546
Total Volume	0	640	115	755	262	63	7	332	63	474	59	596	63	38	548	649	2332
% App. Total	0	84.8	15.2		78.9	19	2.1		10.6	79.5	9.9		9.7	5.9	84.4		
PHF	.000	.936	.701	.890	.949	.750	.583	.902	.750	.775	.738	.768	.656	.731	.867	.887	.936

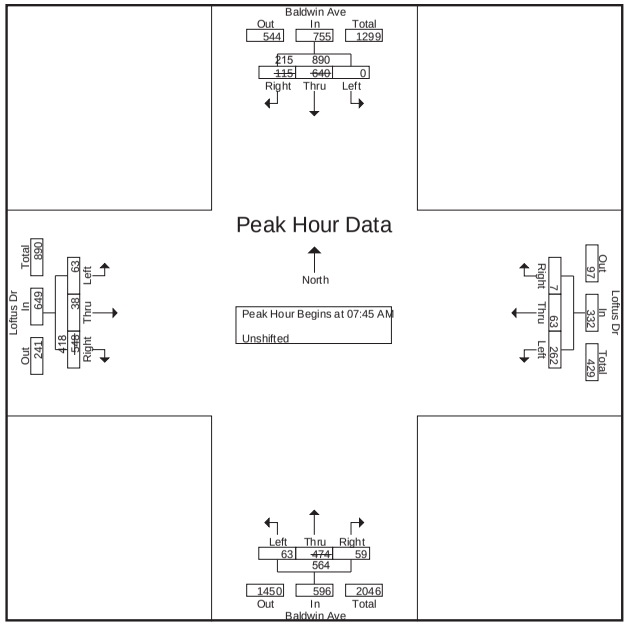

CITY TRAFFIC COUNTERS

626.991.7522

www.ctcounters.com

File Name : BaldwinLoftus
Site Code : 00000000
Start Date : 6/4/2014
Page No : 3

	Baldwin Ave Southbound				Loftus Dr Westbound				Baldwin Ave Northbound				Loftus Dr Eastbound				
Start Time	Left	Thru	Right	App. Total	Left	Thru	Right	App. Total	Left	Thru	Right	App. Total	Left	Thru	Right	App. Total	Int. Total
Peak Hour Analysis From 12:00 PM to 05:45 PM - Peak 1 of 1																	
Peak Hour for Entire Intersection Begins at 05:00 PM																	
05:00 PM	**3**	41	32	76	17	**29**	4	**50**	80	220	**46**	346	15	5	51	71	543
05:15 PM	3	**55**	36	**94**	**18**	20	2	40	70	222	38	330	17	15	70	102	566
05:30 PM	0	34	**45**	79	11	18	5	34	92	**228**	32	**352**	**25**	12	**87**	**124**	**589**
05:45 PM	1	42	43	86	10	22	**8**	40	**96**	226	30	352	17	**22**	68	107	585
Total Volume	7	172	156	335	56	89	19	164	338	896	146	1380	74	54	276	404	2283
% App. Total	2.1	51.3	46.6		34.1	54.3	11.6		24.5	64.9	10.6		18.3	13.4	68.3		
PHF	.583	.782	.867	.891	.778	.767	.594	.820	.880	.982	.793	.980	.740	.614	.793	.815	.969

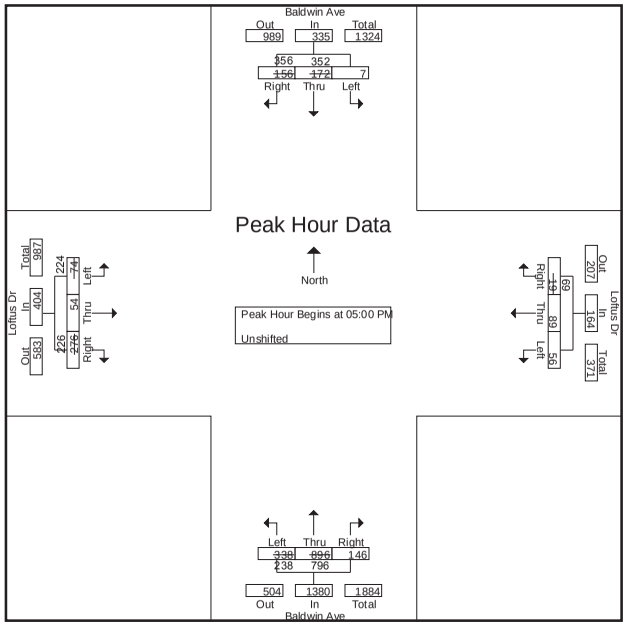

CITY TRAFFIC COUNTERS

626.991.7522

www.ctcounters.com

File Name : Baldwin_Loftus_Sat
Site Code : 00000000
Start Date : 6/7/2014
Page No : 1

Groups Printed- Unshifted

	Baldwin Ave Southbound			Loftus Dr Westbound			Baldwin Ave Northbound			Loftus Dr Eastbound			
Start Time	Left	Thru	Right	Left	Thru	Right	Left	Thru	Right	Left	Thru	Right	Int. Total
12:00 PM	6	76	27	16	17	2	40	137	12	17	10	78	438
12:15 PM	1	83	31	19	12	5	35	115	10	19	9	62	401
12:30 PM	1	80	29	15	8	10	34	134	13	14	9	66	413
12:45 PM	0	66	32	11	17	5	37	152	10	9	11	55	405
Total	8	305	119	61	54	22	146	538	45	59	39	261	1657
01:00 PM	1	56	31	14	12	8	36	128	18	17	11	64	396
01:15 PM	4	54	23	15	12	2	45	124	14	14	6	75	388
01:30 PM	0	59	29	16	13	4	31	138	12	11	9	90	412
01:45 PM	4	54	23	10	8	7	30	123	26	11	7	70	373
Total	9	223	106	55	45	21	142	513	70	53	33	299	1569
Grand Total	17	528	225	116	99	43	288	1051	115	112	72	560	3226
Apprch %	2.2	68.6	29.2	45	38.4	16.7	19.8	72.3	7.9	15.1	9.7	75.3	
Total %	0.5	16.4	7	3.6	3.1	1.3	8.9	32.6	3.6	3.5	2.2	17.4	

CITY TRAFFIC COUNTERS

626.991.7522

www.ctcounters.com

File Name : Baldwin_Loftus_Sat
Site Code : 00000000
Start Date : 6/7/2014
Page No : 2

	Baldwin Ave Southbound				Loftus Dr Westbound				Baldwin Ave Northbound				Loftus Dr Eastbound				
Start Time	Left	Thru	Right	App. Total	Left	Thru	Right	App. Total	Left	Thru	Right	App. Total	Left	Thru	Right	App. Total	Int. Total
Peak Hour Analysis From 12:00 PM to 01:45 PM - Peak 1 of 1																	
Peak Hour for Entire Intersection Begins at 12:00 PM																	
12:00 PM	**6**	76	27	109	16	**17**	2	35	**40**	137	12	189	17	10	**78**	**105**	**438**
12:15 PM	1	**83**	31	**115**	**19**	12	5	**36**	35	115	10	160	**19**	9	62	90	401
12:30 PM	1	80	29	110	15	8	**10**	33	34	134	**13**	181	14	9	66	89	413
12:45 PM	0	66	**32**	98	11	17	5	33	37	**152**	10	**199**	9	**11**	55	75	405
Total Volume	8	305	119	432	61	54	22	137	146	538	45	729	59	39	261	359	1657
% App. Total	1.9	70.6	27.5		44.5	39.4	16.1		20	73.8	6.2		16.4	10.9	72.7		
PHF	.333	.919	.930	.939	.803	.794	.550	.951	.913	.885	.865	.916	.776	.886	.837	.855	.946

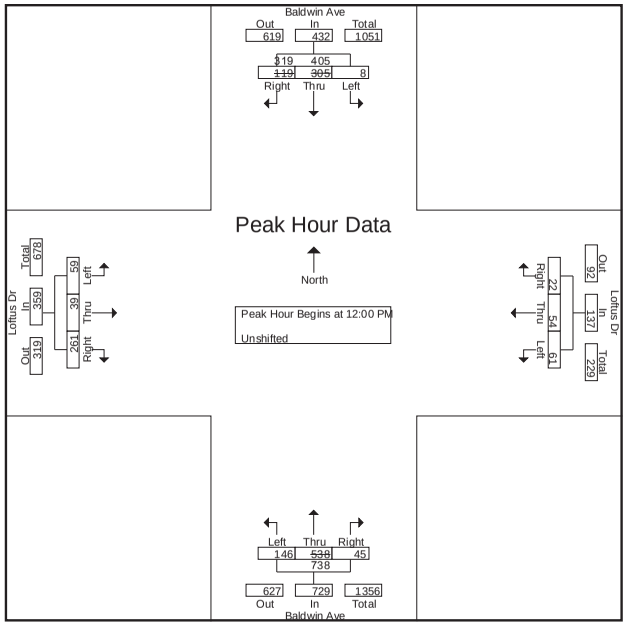

Counts Unlimited Inc.
PO Box 1178
Corona, CA 92878
(951) 268-6268

City of El Monte
N/S: Baldwin Avenue
E/W: Flair Drive
Weather: Sunny

File Name : ELMBAFLAM
Site Code : 00000028
Start Date : 9/12/2012
Page No : 1

Groups Printed- Total Volume

	Baldwin Avenue Southbound			Baldwin Avenue Northbound			Flair Drive Eastbound			
Start Time	Thru	Right	App. Total	Left	Thru	App. Total	Left	Right	App. Total	Int. Total
07:00 AM	147	141	288	9	103	112	5	12	17	417
07:15 AM	187	131	318	4	111	115	6	19	25	458
07:30 AM	185	170	355	8	143	151	7	17	24	530
07:45 AM	192	201	393	10	161	171	10	13	23	587
Total	711	643	1354	31	518	549	28	61	89	1992
08:00 AM	178	191	369	11	173	184	4	21	25	578
08:15 AM	197	191	388	20	160	180	8	14	22	590
08:30 AM	174	217	391	9	125	134	10	16	26	551
08:45 AM	188	201	389	13	181	194	12	25	37	620
Total	737	800	1537	53	639	692	34	76	110	2339
Grand Total	1448	1443	2891	84	1157	1241	62	137	199	4331
Apprch %	50.1	49.9		6.8	93.2		31.2	68.8		
Total %	33.4	33.3	66.8	1.9	26.7	28.7	1.4	3.2	4.6	

	Baldwin Avenue Southbound			Baldwin Avenue Northbound			Flair Drive Eastbound			
Start Time	Thru	Right	App. Total	Left	Thru	App. Total	Left	Right	App. Total	Int. Total
Peak Hour Analysis From 07:00 AM to 08:45 AM - Peak 1 of 1										
Peak Hour for Entire Intersection Begins at 08:00 AM										
08:00 AM	178	191	369	11	173	184	4	21	25	578
08:15 AM	**197**	191	388	**20**	160	180	8	14	22	590
08:30 AM	174	**217**	**391**	9	125	134	10	16	26	551
08:45 AM	188	201	389	13	**181**	**194**	**12**	**25**	**37**	**620**
Total Volume	737	800	1537	53	639	692	34	76	110	2339
% App. Total	48	52		7.7	92.3		30.9	69.1		
PHF	.935	.922	.983	.663	.883	.892	.708	.760	.743	.943

Counts Unlimited Inc.
PO Box 1178
Corona, CA 92878
(951) 268-6268

City of El Monte
N/S: Baldwin Avenue
E/W: Flair Drive
Weather: Sunny

File Name : ELMBAFLAM
Site Code : 00000028
Start Date : 9/12/2012
Page No : 2

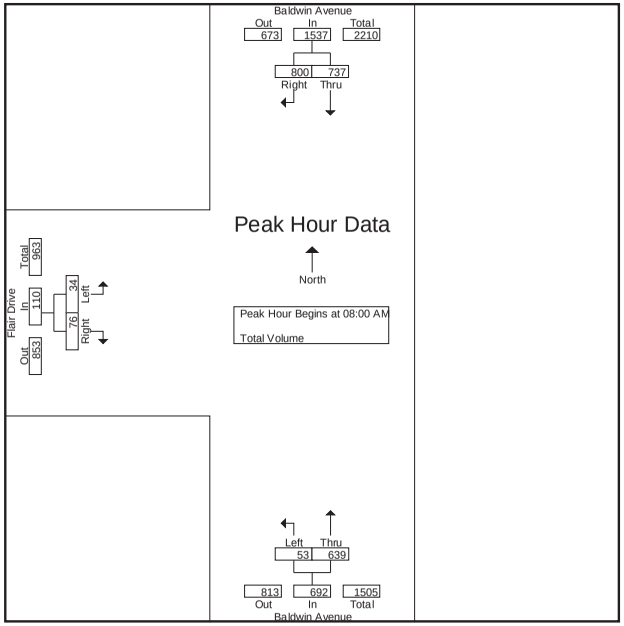

Peak Hour Analysis From 07:00 AM to 08:45 AM - Peak 1 of 1
Peak Hour for Each Approach Begins at:

	07:45 AM			08:00 AM			08:00 AM		
+0 mins.	192	201	**393**	11	173	184	4	21	25
+15 mins.	178	191	369	**20**	160	180	8	14	22
+30 mins.	**197**	191	388	9	125	134	10	16	26
+45 mins.	174	**217**	391	13	**181**	**194**	**12**	**25**	**37**
Total Volume	741	800	1541	53	639	692	34	76	110
% App. Total	48.1	51.9		7.7	92.3		30.9	69.1	
PHF	.940	.922	.980	.663	.883	.892	.708	.760	.743

Counts Unlimited Inc.
PO Box 1178
Corona, CA 92878
(951) 268-6268

City of El Monte
N/S: Baldwin Avenue
E/W: Flair Drive
Weather: Sunny

File Name : ELMBAFLPM
Site Code : 00000028
Start Date : 9/12/2012
Page No : 1

Groups Printed- Total Volume

	Baldwin Avenue Southbound			Baldwin Avenue Northbound			Flair Drive Eastbound			
Start Time	Thru	Right	App. Total	Left	Thru	App. Total	Left	Right	App. Total	Int. Total
04:00 PM	89	48	137	21	216	237	58	59	117	491
04:15 PM	101	49	150	8	253	261	31	64	95	506
04:30 PM	92	42	134	10	256	266	55	113	168	568
04:45 PM	124	42	166	3	223	226	36	84	120	512
Total	406	181	587	42	948	990	180	320	500	2077
05:00 PM	112	32	144	6	203	209	63	112	175	528
05:15 PM	117	43	160	7	238	245	53	82	135	540
05:30 PM	96	28	124	8	238	246	54	95	149	519
05:45 PM	103	31	134	6	205	211	57	66	123	468
Total	428	134	562	27	884	911	227	355	582	2055
Grand Total	834	315	1149	69	1832	1901	407	675	1082	4132
Apprch %	72.6	27.4		3.6	96.4		37.6	62.4		
Total %	20.2	7.6	27.8	1.7	44.3	46	9.8	16.3	26.2	

	Baldwin Avenue Southbound			Baldwin Avenue Northbound			Flair Drive Eastbound			
Start Time	Thru	Right	App. Total	Left	Thru	App. Total	Left	Right	App. Total	Int. Total
Peak Hour Analysis From 04:00 PM to 05:45 PM - Peak 1 of 1										
Peak Hour for Entire Intersection Begins at 04:30 PM										
04:30 PM	92	42	134	**10**	**256**	**266**	55	**113**	168	**568**
04:45 PM	**124**	42	**166**	3	223	226	36	84	120	512
05:00 PM	112	32	144	6	203	209	**63**	112	**175**	528
05:15 PM	117	**43**	160	7	238	245	53	82	135	540
Total Volume	445	159	604	26	920	946	207	391	598	2148
% App. Total	73.7	26.3		2.7	97.3		34.6	65.4		
PHF	.897	.924	.910	.650	.898	.889	.821	.865	.854	.945

Counts Unlimited Inc.
PO Box 1178
Corona, CA 92878
(951) 268-6268

City of El Monte
N/S: Baldwin Avenue
E/W: Flair Drive
Weather: Sunny

File Name : ELMBAFLPM
Site Code : 00000028
Start Date : 9/12/2012
Page No : 2

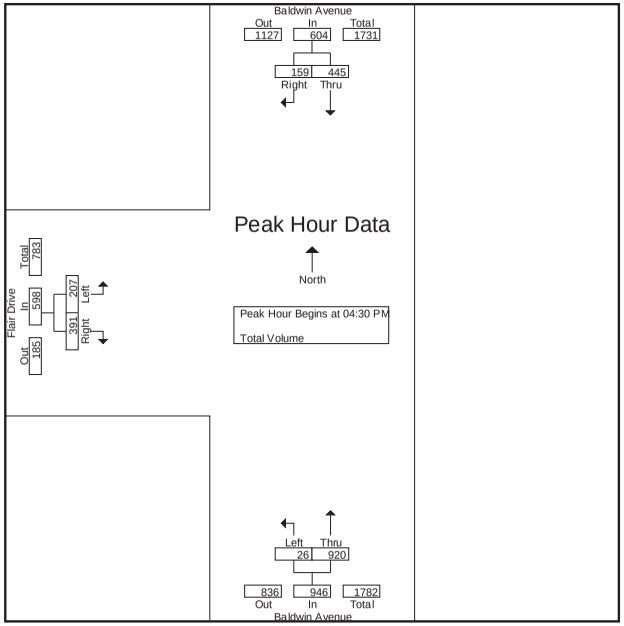

Peak Hour Analysis From 04:00 PM to 05:45 PM - Peak 1 of 1
Peak Hour for Each Approach Begins at:

	04:30 PM			04:00 PM			04:30 PM		
+0 mins.	92	42	134	**21**	216	237	55	**113**	168
+15 mins.	**124**	42	**166**	8	253	261	36	84	120
+30 mins.	112	32	144	10	**256**	**266**	**63**	112	**175**
+45 mins.	117	**43**	160	3	223	226	53	82	135
Total Volume	445	159	604	42	948	990	207	391	598
% App. Total	73.7	26.3		4.2	95.8		34.6	65.4	
PHF	.897	.924	.910	.500	.926	.930	.821	.865	.854

Counts Unlimited Inc.
PO Box 1178
Corona, CA 92878
(951) 268-6268

City of El Monte
N/S: Baldwin Avenue
E/W: Flair Drive
Weather: Sunny

File Name : ELMBAFLSAT
Site Code : 00000066
Start Date : 9/15/2012
Page No : 1

Groups Printed- Total Volume

	Baldwin Avenue Southbound			Baldwin Avenue Northbound			Flair Drive Eastbound			
Start Time	Thru	Right	App. Total	Left	Thru	App. Total	Left	Right	App. Total	Int. Total
12:00 PM	149	37	186	20	182	202	29	23	52	440
12:15 PM	137	38	175	18	195	213	28	28	56	444
12:30 PM	151	27	178	14	215	229	17	22	39	446
12:45 PM	138	31	169	13	210	223	13	35	48	440
Total	575	133	708	65	802	867	87	108	195	1770
01:00 PM	153	33	186	14	187	201	26	21	47	434
01:15 PM	158	25	183	14	181	195	12	23	35	413
01:30 PM	147	26	173	14	174	188	19	23	42	403
01:45 PM	116	33	149	11	217	228	18	16	34	411
Total	574	117	691	53	759	812	75	83	158	1661
Grand Total	1149	250	1399	118	1561	1679	162	191	353	3431
Apprch %	82.1	17.9		7	93		45.9	54.1		
Total %	33.5	7.3	40.8	3.4	45.5	48.9	4.7	5.6	10.3	

	Baldwin Avenue Southbound			Baldwin Avenue Northbound			Flair Drive Eastbound			
Start Time	Thru	Right	App. Total	Left	Thru	App. Total	Left	Right	App. Total	Int. Total
Peak Hour Analysis From 12:00 PM to 01:45 PM - Peak 1 of 1										
Peak Hour for Entire Intersection Begins at 12:00 PM										
12:00 PM	149	37	**186**	**20**	182	202	**29**	23	52	440
12:15 PM	137	**38**	175	18	195	213	28	28	**56**	444
12:30 PM	**151**	27	178	14	**215**	**229**	17	22	39	**446**
12:45 PM	138	31	169	13	210	223	13	**35**	48	440
Total Volume	575	133	708	65	802	867	87	108	195	1770
% App. Total	81.2	18.8		7.5	92.5		44.6	55.4		
PHF	.952	.875	.952	.813	.933	.947	.750	.771	.871	.992

Counts Unlimited Inc.
PO Box 1178
Corona, CA 92878
(951) 268-6268

City of El Monte
N/S: Baldwin Avenue
E/W: Flair Drive
Weather: Sunny

File Name : ELMBAFLSAT
Site Code : 00000066
Start Date : 9/15/2012
Page No : 2

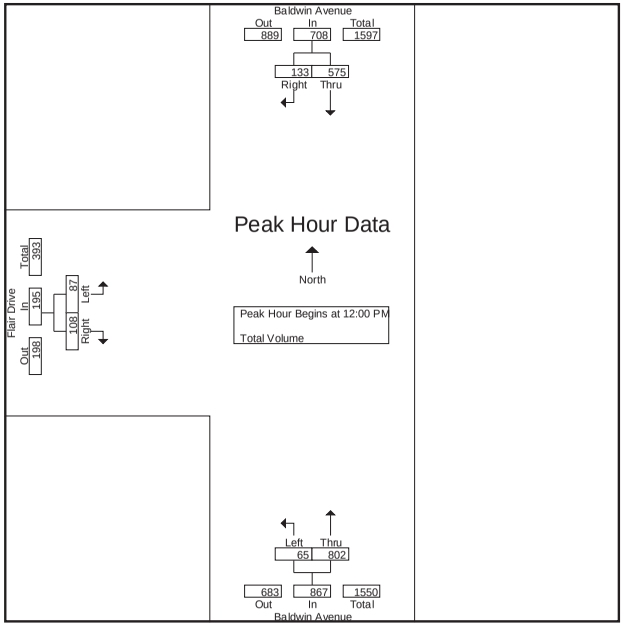

Peak Hour Analysis From 12:00 PM to 01:45 PM - Peak 1 of 1
Peak Hour for Each Approach Begins at:

	12:30 PM			12:00 PM			12:00 PM		
+0 mins.	151	27	178	**20**	182	202	**29**	23	52
+15 mins.	138	31	169	18	195	213	28	28	**56**
+30 mins.	153	**33**	**186**	14	**215**	**229**	17	22	39
+45 mins.	**158**	25	183	13	210	223	13	**35**	48
Total Volume	600	116	716	65	802	867	87	108	195
% App. Total	83.8	16.2		7.5	92.5		44.6	55.4	
PHF	.949	.879	.962	.813	.933	.947	.750	.771	.871

CITY TRAFFIC COUNTERS

626.991.7522

www.ctcounters.com

File Name : MercedGarvey
Site Code : 00000000
Start Date : 6/5/2014
Page No : 1

Groups Printed- Unshifted

	Merced Ave Southbound			Garvey Ave Westbound			Merced Ave Northbound			Garvey Ave Eastbound			
Start Time	Left	Thru	Right	Left	Thru	Right	Left	Thru	Right	Left	Thru	Right	Int. Total
07:00 AM	5	40	20	17	159	8	10	3	10	6	85	28	391
07:15 AM	9	41	34	15	218	8	25	14	5	8	97	22	496
07:30 AM	13	44	37	31	259	6	25	17	16	9	142	29	628
07:45 AM	20	62	52	31	269	7	36	24	26	8	137	43	715
Total	47	187	143	94	905	29	96	58	57	31	461	122	2230
08:00 AM	13	51	50	37	230	17	29	17	18	10	119	39	630
08:15 AM	9	50	40	27	254	8	25	12	29	11	129	28	622
08:30 AM	9	43	33	19	251	5	24	20	18	19	130	29	600
08:45 AM	7	44	32	22	230	4	27	16	24	8	130	16	560
Total	38	188	155	105	965	34	105	65	89	48	508	112	2412
04:00 PM	8	28	13	25	171	7	26	37	37	17	234	20	623
04:15 PM	7	29	23	22	118	10	26	33	29	28	229	29	583
04:30 PM	5	27	20	18	145	9	31	34	29	19	269	17	623
04:45 PM	5	26	16	17	156	12	29	31	40	16	256	21	625
Total	25	110	72	82	590	38	112	135	135	80	988	87	2454
05:00 PM	9	35	21	16	164	7	35	45	36	17	252	22	659
05:15 PM	10	27	19	19	158	8	29	33	30	20	283	19	655
05:30 PM	15	35	13	18	168	12	53	50	44	23	240	17	688
05:45 PM	14	27	14	30	177	11	39	44	33	26	219	13	647
Total	48	124	67	83	667	38	156	172	143	86	994	71	2649
Grand Total	158	609	437	364	3127	139	469	430	424	245	2951	392	9745
Apprch %	13.1	50.6	36.3	10	86.1	3.8	35.4	32.5	32	6.8	82.2	10.9	
Total %	1.6	6.2	4.5	3.7	32.1	1.4	4.8	4.4	4.4	2.5	30.3	4	

CITY TRAFFIC COUNTERS

626.991.7522

www.ctcounters.com

File Name : MercedGarvey
Site Code : 00000000
Start Date : 6/5/2014
Page No : 2

	Merced Ave Southbound				Garvey Ave Westbound				Merced Ave Northbound				Garvey Ave Eastbound				
Start Time	Left	Thru	Right	App. Total	Left	Thru	Right	App. Total	Left	Thru	Right	App. Total	Left	Thru	Right	App. Total	Int. Total
Peak Hour Analysis From 07:00 AM to 11:45 AM - Peak 1 of 1																	
Peak Hour for Entire Intersection Begins at 07:30 AM																	
07:30 AM	13	44	37	94	31	259	6	296	25	17	16	58	9	**142**	29	180	628
07:45 AM	**20**	**62**	**52**	**134**	31	**269**	7	**307**	**36**	**24**	26	**86**	8	137	**43**	**188**	**715**
08:00 AM	13	51	50	114	**37**	230	**17**	284	29	17	18	64	10	119	39	168	630
08:15 AM	9	50	40	99	27	254	8	289	25	12	**29**	66	**11**	129	28	168	622
Total Volume	55	207	179	441	126	1012	38	1176	115	70	89	274	38	527	139	704	2595
% App. Total	12.5	46.9	40.6		10.7	86.1	3.2		42	25.5	32.5		5.4	74.9	19.7		
PHF	.688	.835	.861	.823	.851	.941	.559	.958	.799	.729	.767	.797	.864	.928	.808	.936	.907

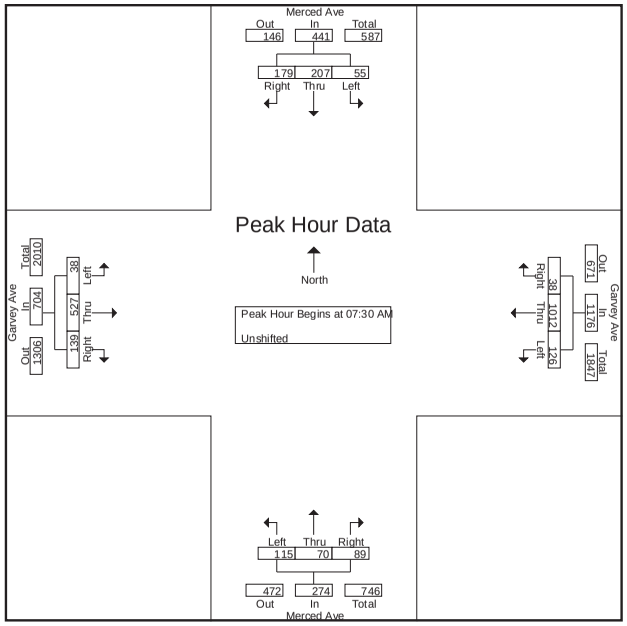

CITY TRAFFIC COUNTERS
626.991.7522
www.ctcounters.com

File Name : MercedGarvey
Site Code : 00000000
Start Date : 6/5/2014
Page No : 3

	Merced Ave Southbound				Garvey Ave Westbound				Merced Ave Northbound				Garvey Ave Eastbound				
Start Time	Left	Thru	Right	App. Total	Left	Thru	Right	App. Total	Left	Thru	Right	App. Total	Left	Thru	Right	App. Total	Int. Total
Peak Hour Analysis From 12:00 PM to 05:45 PM - Peak 1 of 1																	
Peak Hour for Entire Intersection Begins at 05:00 PM																	
05:00 PM	9	**35**	**21**	**65**	16	164	7	187	35	45	36	116	17	252	**22**	291	659
05:15 PM	10	27	19	56	19	158	8	185	29	33	30	92	20	**283**	19	**322**	655
05:30 PM	**15**	35	13	63	18	168	**12**	198	**53**	**50**	**44**	**147**	23	240	17	280	**688**
05:45 PM	14	27	14	55	**30**	**177**	11	**218**	39	44	33	116	**26**	219	13	258	647
Total Volume	48	124	67	239	83	667	38	788	156	172	143	471	86	994	71	1151	2649
% App. Total	20.1	51.9	28		10.5	84.6	4.8		33.1	36.5	30.4		7.5	86.4	6.2		
PHF	.800	.886	.798	.919	.692	.942	.792	.904	.736	.860	.813	.801	.827	.878	.807	.894	.963

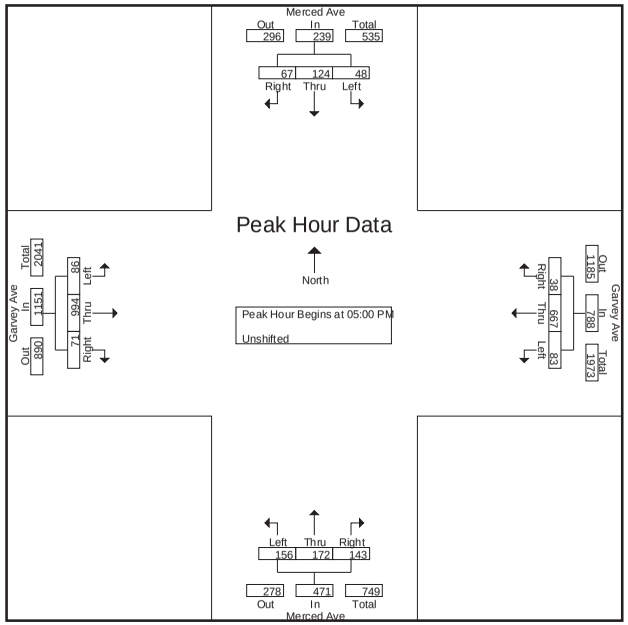

CITY TRAFFIC COUNTERS
626.991.7522
www.ctcounters.com

File Name : Merced_Garvey_Sat
Site Code : 00000000
Start Date : 6/7/2014
Page No : 1

Groups Printed- Unshifted

	Merced Ave Southbound			Garvey Ave Westbound			Merced Ave Northbound			Garvey Ave Eastbound			
Start Time	Left	Thru	Right	Left	Thru	Right	Left	Thru	Right	Left	Thru	Right	Int. Total
12:00 PM	10	13	19	15	204	11	29	23	24	21	231	28	628
12:15 PM	13	25	16	17	224	5	30	29	29	23	256	21	688
12:30 PM	9	25	22	21	204	8	28	32	29	28	242	37	685
12:45 PM	9	26	19	18	189	8	27	16	22	21	233	23	611
Total	41	89	76	71	821	32	114	100	104	93	962	109	2612
01:00 PM	8	32	30	20	185	5	35	36	23	17	262	17	670
01:15 PM	8	23	28	24	193	8	34	22	24	20	233	21	638
01:30 PM	5	25	24	11	186	8	36	21	18	17	241	29	621
01:45 PM	11	18	23	23	219	7	35	9	20	20	227	23	635
Total	32	98	105	78	783	28	140	88	85	74	963	90	2564
Grand Total	73	187	181	149	1604	60	254	188	189	167	1925	199	5176
Apprch %	16.6	42.4	41	8.2	88.5	3.3	40.3	29.8	30	7.3	84	8.7	
Total %	1.4	3.6	3.5	2.9	31	1.2	4.9	3.6	3.7	3.2	37.2	3.8	

CITY TRAFFIC COUNTERS

626.991.7522

www.ctcounters.com

File Name : Merced_Garvey_Sat
Site Code : 00000000
Start Date : 6/7/2014
Page No : 2

	Merced Ave Southbound				Garvey Ave Westbound				Merced Ave Northbound				Garvey Ave Eastbound				
Start Time	Left	Thru	Right	App. Total	Left	Thru	Right	App. Total	Left	Thru	Right	App. Total	Left	Thru	Right	App. Total	Int. Total
Peak Hour Analysis From 12:00 PM to 01:45 PM - Peak 1 of 1																	
Peak Hour for Entire Intersection Begins at 12:15 PM																	
12:15 PM	**13**	25	16	54	17	**224**	5	**246**	30	29	**29**	88	23	256	21	300	**688**
12:30 PM	9	25	22	56	**21**	204	**8**	233	28	32	29	89	**28**	242	**37**	**307**	685
12:45 PM	9	26	19	54	18	189	8	215	27	16	22	65	21	233	23	277	611
01:00 PM	8	**32**	**30**	**70**	20	185	5	210	**35**	**36**	23	**94**	17	**262**	17	296	670
Total Volume	39	108	87	234	76	802	26	904	120	113	103	336	89	993	98	1180	2654
% App. Total	16.7	46.2	37.2		8.4	88.7	2.9		35.7	33.6	30.7		7.5	84.2	8.3		
PHF	.750	.844	.725	.836	.905	.895	.813	.919	.857	.785	.888	.894	.795	.948	.662	.961	.964

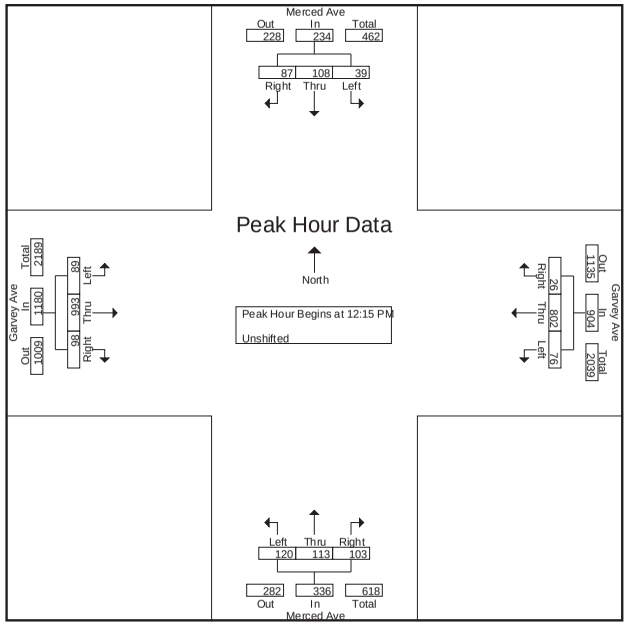

CITY TRAFFIC COUNTERS

626.991.7522

www.ctcounters.com

File Name : SA_LAzusa
Site Code : 00000000
Start Date : 6/5/2014
Page No : 1

Groups Printed- Unshifted

	Santa Anita Ave Southbound			Lower Azusa Rd Westbound			Santa Anita Ave Northbound			Lower Azusa Rd Eastbound			
Start Time	Left	Thru	Right	Left	Thru	Right	Left	Thru	Right	Left	Thru	Right	Int. Total
07:00 AM	29	137	13	33	134	40	27	108	8	15	48	20	612
07:15 AM	55	181	19	34	144	48	41	200	16	8	67	22	835
07:30 AM	77	182	13	34	136	53	30	235	29	33	105	33	960
07:45 AM	63	249	21	25	119	61	38	264	27	27	105	27	1026
Total	224	749	66	126	533	202	136	807	80	83	325	102	3433
08:00 AM	65	185	26	37	120	57	39	228	21	40	85	39	942
08:15 AM	61	153	55	28	171	46	39	201	29	13	142	28	966
08:30 AM	37	183	26	35	135	45	31	194	20	15	118	32	871
08:45 AM	41	184	17	30	122	43	44	215	37	19	112	33	897
Total	204	705	124	130	548	191	153	838	107	87	457	132	3676
04:00 PM	73	160	35	31	130	64	32	175	49	20	162	30	961
04:15 PM	54	139	40	23	136	53	44	190	48	22	165	42	956
04:30 PM	71	166	33	29	129	55	39	207	38	17	126	27	937
04:45 PM	77	180	54	34	135	41	46	197	63	15	157	21	1020
Total	275	645	162	117	530	213	161	769	198	74	610	120	3874
05:00 PM	74	214	46	33	153	77	40	204	44	11	181	22	1099
05:15 PM	88	231	25	30	144	65	48	253	39	18	143	25	1109
05:30 PM	72	216	28	32	125	77	39	249	40	19	148	21	1066
05:45 PM	82	227	28	41	135	51	38	250	38	28	140	33	1091
Total	316	888	127	136	557	270	165	956	161	76	612	101	4365
Grand Total	1019	2987	479	509	2168	876	615	3370	546	320	2004	455	15348
Apprch %	22.7	66.6	10.7	14.3	61	24.7	13.6	74.4	12.1	11.5	72.1	16.4	
Total %	6.6	19.5	3.1	3.3	14.1	5.7	4	22	3.6	2.1	13.1	3	

CITY TRAFFIC COUNTERS

626.991.7522

www.ctcounters.com

File Name : SA_LAzusa
Site Code : 00000000
Start Date : 6/5/2014
Page No : 2

	Santa Anita Ave Southbound				Lower Azusa Rd Westbound				Santa Anita Ave Northbound				Lower Azusa Rd Eastbound				
Start Time	Left	Thru	Right	App. Total	Left	Thru	Right	App. Total	Left	Thru	Right	App. Total	Left	Thru	Right	App. Total	Int. Total
Peak Hour Analysis From 07:00 AM to 11:45 AM - Peak 1 of 1																	
Peak Hour for Entire Intersection Begins at 07:30 AM																	
07:30 AM	**77**	182	13	272	34	136	53	223	30	235	**29**	294	33	105	33	171	960
07:45 AM	63	**249**	21	**333**	25	119	**61**	205	38	**264**	27	**329**	27	105	27	159	**1026**
08:00 AM	65	185	26	276	**37**	120	57	214	**39**	228	21	288	**40**	85	**39**	164	942
08:15 AM	61	153	**55**	269	28	**171**	46	**245**	39	201	29	269	13	**142**	28	**183**	966
Total Volume	266	769	115	1150	124	546	217	887	146	928	106	1180	113	437	127	677	3894
% App. Total	23.1	66.9	10		14	61.6	24.5		12.4	78.6	9		16.7	64.5	18.8		
PHF	.864	.772	.523	.863	.838	.798	.889	.905	.936	.879	.914	.897	.706	.769	.814	.925	.949

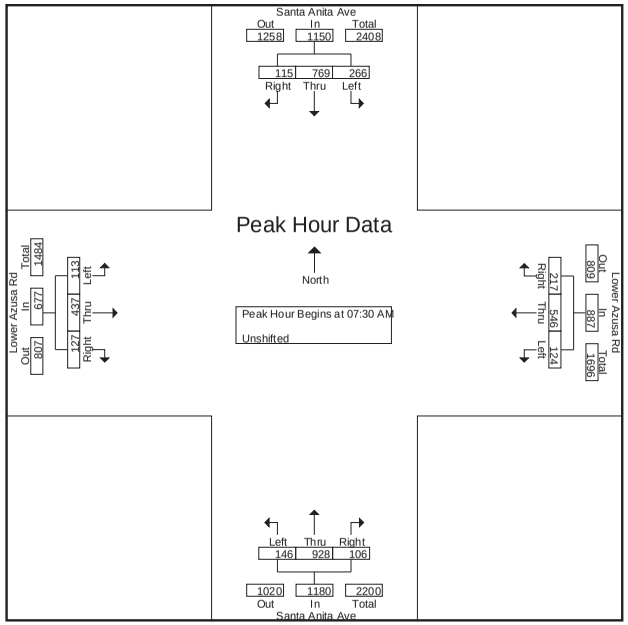

CITY TRAFFIC COUNTERS

626.991.7522

www.ctcounters.com

File Name : SA_LAzusa
Site Code : 00000000
Start Date : 6/5/2014
Page No : 3

	Santa Anita Ave Southbound				Lower Azusa Rd Westbound				Santa Anita Ave Northbound				Lower Azusa Rd Eastbound				
Start Time	Left	Thru	Right	App. Total	Left	Thru	Right	App. Total	Left	Thru	Right	App. Total	Left	Thru	Right	App. Total	Int. Total
Peak Hour Analysis From 12:00 PM to 05:45 PM - Peak 1 of 1																	
Peak Hour for Entire Intersection Begins at 05:00 PM																	
05:00 PM	74	214	**46**	334	33	**153**	**77**	**263**	40	204	**44**	288	11	**181**	22	**214**	1099
05:15 PM	**88**	**231**	25	**344**	30	144	65	239	**48**	**253**	39	**340**	18	143	25	186	**1109**
05:30 PM	72	216	28	316	32	125	77	234	39	249	40	328	19	148	21	188	1066
05:45 PM	82	227	28	337	**41**	135	51	227	38	250	38	326	**28**	140	**33**	201	1091
Total Volume	316	888	127	1331	136	557	270	963	165	956	161	1282	76	612	101	789	4365
% App. Total	23.7	66.7	9.5		14.1	57.8	28		12.9	74.6	12.6		9.6	77.6	12.8		
PHF	.898	.961	.690	.967	.829	.910	.877	.915	.859	.945	.915	.943	.679	.845	.765	.922	.984

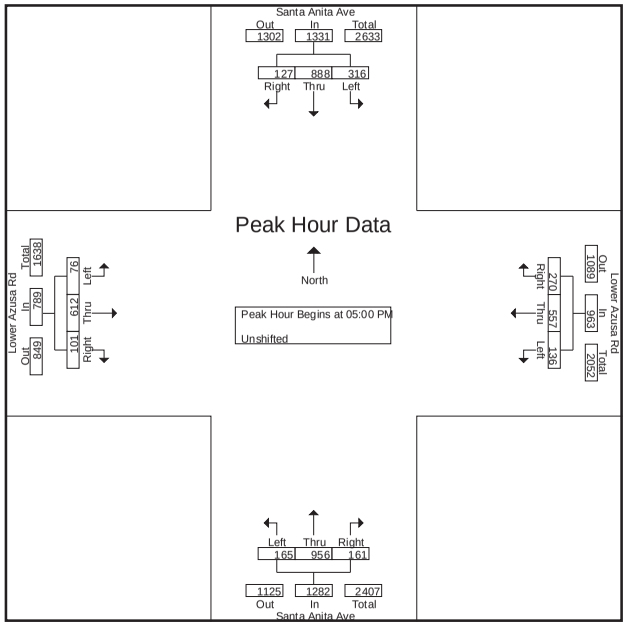

CITY TRAFFIC COUNTERS

626.991.7522

www.ctcounters.com

File Name : SAnita_LAzusa_Sat
Site Code : 00000000
Start Date : 6/14/2014
Page No : 1

Groups Printed- Unshifted

	Santa Anita Ave Southbound			Lower Azusa Rd Westbound			Santa Anita Ave Northbound			Lower Azusa Rd Eastbound			
Start Time	Left	Thru	Right	Left	Thru	Right	Left	Thru	Right	Left	Thru	Right	Int. Total
12:00 PM	65	153	24	39	149	37	48	233	32	29	127	42	978
12:15 PM	72	194	18	42	157	71	50	202	30	32	115	34	1017
12:30 PM	72	163	26	32	161	64	51	215	35	27	122	39	1007
12:45 PM	62	180	36	43	177	65	47	183	20	29	140	33	1015
Total	271	690	104	156	644	237	196	833	117	117	504	148	4017
01:00 PM	81	169	27	38	168	58	64	180	31	30	175	41	1062
01:15 PM	60	172	26	38	136	43	44	196	28	34	138	47	962
01:30 PM	79	179	21	29	148	44	59	204	32	27	167	43	1032
01:45 PM	63	208	30	32	123	49	62	216	31	16	137	36	1003
Total	283	728	104	137	575	194	229	796	122	107	617	167	4059
Grand Total	554	1418	208	293	1219	431	425	1629	239	224	1121	315	8076
Apprch %	25.4	65	9.5	15.1	62.7	22.2	18.5	71	10.4	13.5	67.5	19	
Total %	6.9	17.6	2.6	3.6	15.1	5.3	5.3	20.2	3	2.8	13.9	3.9	

CITY TRAFFIC COUNTERS

626.991.7522

www.ctcounters.com

File Name : SAnita_LAzusa_Sat
Site Code : 00000000
Start Date : 6/14/2014
Page No : 2

	Santa Anita Ave Southbound				Lower Azusa Rd Westbound				Santa Anita Ave Northbound				Lower Azusa Rd Eastbound				
Start Time	Left	Thru	Right	App. Total	Left	Thru	Right	App. Total	Left	Thru	Right	App. Total	Left	Thru	Right	App. Total	Int. Total
Peak Hour Analysis From 12:00 PM to 01:45 PM - Peak 1 of 1																	
Peak Hour for Entire Intersection Begins at 12:15 PM																	
12:15 PM	72	**194**	18	**284**	42	157	**71**	270	50	202	30	282	**32**	115	34	181	1017
12:30 PM	72	163	26	261	32	161	64	257	51	**215**	**35**	**301**	27	122	39	188	1007
12:45 PM	62	180	**36**	278	**43**	**177**	65	**285**	47	183	20	250	29	140	33	202	1015
01:00 PM	**81**	169	27	277	38	168	58	264	**64**	180	31	275	30	**175**	**41**	**246**	**1062**
Total Volume	287	706	107	1100	155	663	258	1076	212	780	116	1108	118	552	147	817	4101
% App. Total	26.1	64.2	9.7		14.4	61.6	24		19.1	70.4	10.5		14.4	67.6	18		
PHF	.886	.910	.743	.968	.901	.936	.908	.944	.828	.907	.829	.920	.922	.789	.896	.830	.965

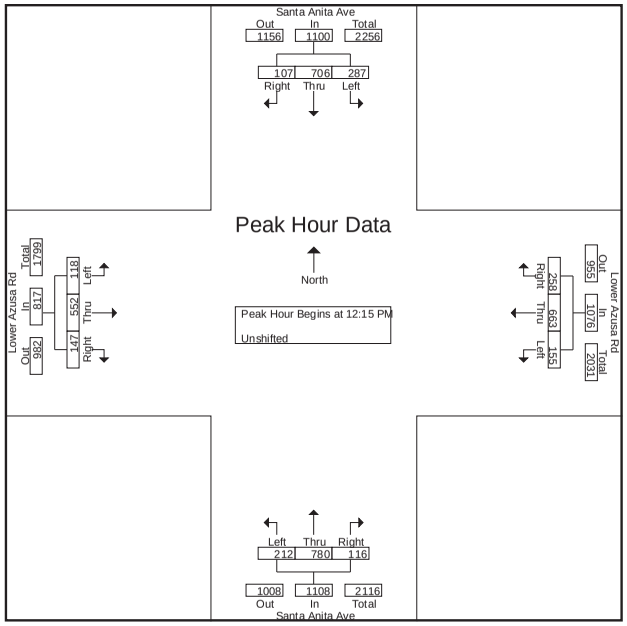

CITY TRAFFIC COUNTERS

626.991.7522

www.ctcounters.com

File Name : SA_Valley
Site Code : 00000000
Start Date : 6/4/2014
Page No : 1

Groups Printed- Unshifted

	Santa Anita Ave Southbound			Valley Blvd Westbound			Santa Anita Ave Northbound			Valley Blvd Eastbound			
Start Time	Left	Thru	Right	Left	Thru	Right	Left	Thru	Right	Left	Thru	Right	Int. Total
07:00 AM	5	186	51	27	120	11	47	96	5	14	69	0	631
07:15 AM	8	201	59	15	172	9	90	144	8	22	72	1	801
07:30 AM	7	255	84	15	204	15	73	180	7	35	106	0	981
07:45 AM	16	270	100	15	244	6	104	181	12	33	116	0	1097
Total	36	912	294	72	740	41	314	601	32	104	363	1	3510
08:00 AM	16	260	81	16	246	7	82	148	10	33	133	0	1032
08:15 AM	11	249	60	19	216	11	75	130	7	28	111	2	919
08:30 AM	15	255	62	21	157	8	88	122	8	37	98	0	871
08:45 AM	9	258	90	18	176	5	103	137	14	33	84	0	927
Total	51	1022	293	74	795	31	348	537	39	131	426	2	3749
04:00 PM	13	153	30	15	133	10	79	186	9	71	204	1	904
04:15 PM	18	178	36	20	142	6	82	246	19	55	187	0	989
04:30 PM	12	153	38	18	140	5	91	223	11	66	215	0	972
04:45 PM	21	177	40	18	125	4	101	241	18	77	207	0	1029
Total	64	661	144	71	540	25	353	896	57	269	813	1	3894
05:00 PM	9	175	45	26	147	7	93	242	15	80	205	0	1044
05:15 PM	17	163	29	21	143	2	89	265	13	78	210	0	1030
05:30 PM	21	153	55	17	161	2	104	231	15	72	180	0	1011
05:45 PM	22	157	30	19	155	1	102	254	11	85	199	0	1035
Total	69	648	159	83	606	12	388	992	54	315	794	0	4120
Grand Total	220	3243	890	300	2681	109	1403	3026	182	819	2396	4	15273
Apprch %	5.1	74.5	20.4	9.7	86.8	3.5	30.4	65.6	3.9	25.4	74.4	0.1	
Total %	1.4	21.2	5.8	2	17.6	0.7	9.2	19.8	1.2	5.4	15.7	0	

CITY TRAFFIC COUNTERS

626.991.7522

www.ctcounters.com

File Name : SA_Valley
Site Code : 00000000
Start Date : 6/4/2014
Page No : 2

	Santa Anita Ave Southbound				Valley Blvd Westbound				Santa Anita Ave Northbound				Valley Blvd Eastbound				
Start Time	Left	Thru	Right	App. Total	Left	Thru	Right	App. Total	Left	Thru	Right	App. Total	Left	Thru	Right	App. Total	Int. Total
Peak Hour Analysis From 07:00 AM to 11:45 AM - Peak 1 of 1																	
Peak Hour for Entire Intersection Begins at 07:30 AM																	
07:30 AM	7	255	84	346	15	204	**15**	234	73	180	7	260	**35**	106	0	141	981
07:45 AM	**16**	**270**	**100**	**386**	15	244	6	265	**104**	**181**	**12**	**297**	33	116	0	149	**1097**
08:00 AM	16	260	81	357	16	**246**	7	**269**	82	148	10	240	33	**133**	0	**166**	1032
08:15 AM	11	249	60	320	**19**	216	11	246	75	130	7	212	28	111	**2**	141	919
Total Volume	50	1034	325	1409	65	910	39	1014	334	639	36	1009	129	466	2	597	4029
% App. Total	3.5	73.4	23.1		6.4	89.7	3.8		33.1	63.3	3.6		21.6	78.1	0.3		
PHF	.781	.957	.813	.913	.855	.925	.650	.942	.803	.883	.750	.849	.921	.876	.250	.899	.918

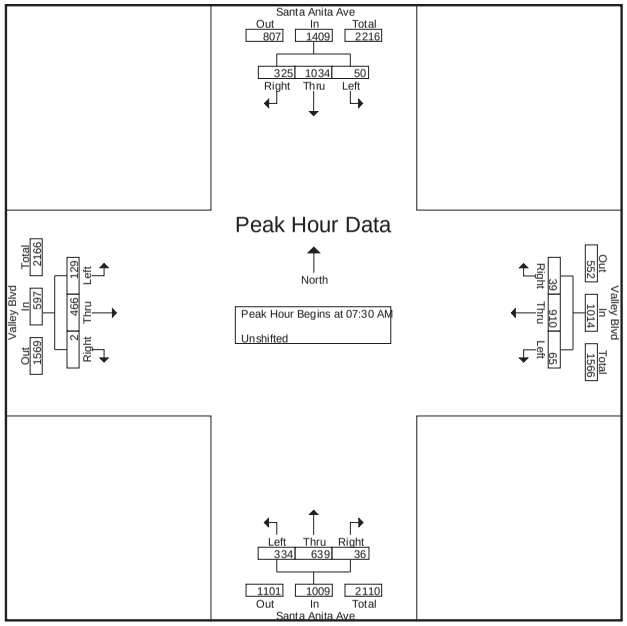

CITY TRAFFIC COUNTERS
626.991.7522
www.ctcounters.com

File Name : SA_Valley
Site Code : 00000000
Start Date : 6/4/2014
Page No : 3

	Santa Anita Ave Southbound				Valley Blvd Westbound				Santa Anita Ave Northbound				Valley Blvd Eastbound				
Start Time	Left	Thru	Right	App. Total	Left	Thru	Right	App. Total	Left	Thru	Right	App. Total	Left	Thru	Right	App. Total	Int. Total
Peak Hour Analysis From 12:00 PM to 05:45 PM - Peak 1 of 1																	
Peak Hour for Entire Intersection Begins at 05:00 PM																	
05:00 PM	9	**175**	45	**229**	**26**	147	**7**	**180**	93	242	**15**	350	80	205	0	285	**1044**
05:15 PM	17	163	29	209	21	143	2	166	89	**265**	13	**367**	78	**210**	0	**288**	1030
05:30 PM	21	153	**55**	229	17	**161**	2	180	**104**	231	15	350	72	180	0	252	1011
05:45 PM	**22**	157	30	209	19	155	1	175	102	254	11	367	**85**	199	0	284	1035
Total Volume	69	648	159	876	83	606	12	701	388	992	54	1434	315	794	0	1109	4120
% App. Total	7.9	74	18.2		11.8	86.4	1.7		27.1	69.2	3.8		28.4	71.6	0		
PHF	.784	.926	.723	.956	.798	.941	.429	.974	.933	.936	.900	.977	.926	.945	.000	.963	.987

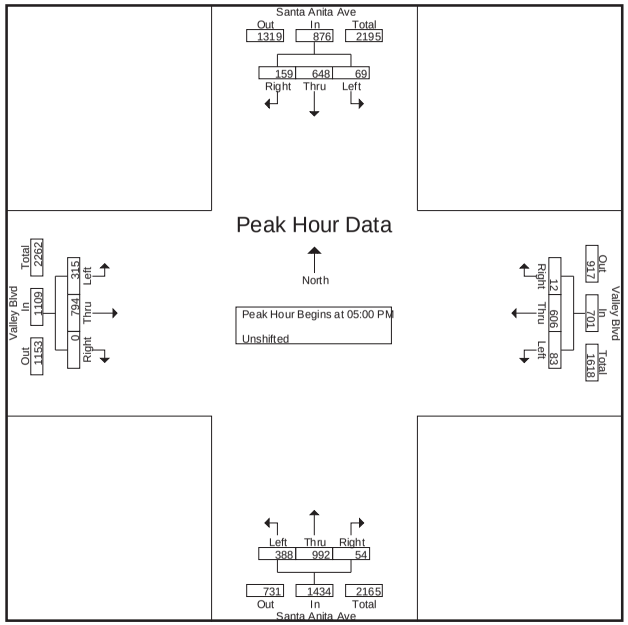

CITY TRAFFIC COUNTERS
626.991.7522
www.ctcounters.com

File Name : SAnita_Valley_Sat
Site Code : 00000000
Start Date : 6/14/2014
Page No : 1

Groups Printed- Unshifted

	Santa Anita Ave Southbound			Valley Blvd Westbound			Santa Anita Ave Northbound			Valley Blvd Eastbound			
Start Time	Left	Thru	Right	Left	Thru	Right	Left	Thru	Right	Left	Thru	Right	Int. Total
12:00 PM	17	148	31	25	127	20	92	167	17	56	110	0	810
12:15 PM	15	153	36	30	112	17	56	185	8	49	106	0	767
12:30 PM	18	146	26	23	104	15	74	173	15	34	111	0	739
12:45 PM	19	164	26	18	101	18	63	175	11	49	137	0	781
Total	69	611	119	96	444	70	285	700	51	188	464	0	3097
01:00 PM	20	180	31	25	118	15	55	181	15	56	126	0	822
01:15 PM	21	190	28	31	115	17	90	189	15	29	114	0	839
01:30 PM	15	182	22	42	117	10	84	179	13	46	117	0	827
01:45 PM	16	169	36	41	125	9	93	184	12	48	119	0	852
Total	72	721	117	139	475	51	322	733	55	179	476	0	3340
Grand Total	141	1332	236	235	919	121	607	1433	106	367	940	0	6437
Apprch %	8.3	77.9	13.8	18.4	72.1	9.5	28.3	66.8	4.9	28.1	71.9	0	
Total %	2.2	20.7	3.7	3.7	14.3	1.9	9.4	22.3	1.6	5.7	14.6	0	

CITY TRAFFIC COUNTERS

626.991.7522

www.ctcounters.com

File Name : SAnita_Valley_Sat
Site Code : 00000000
Start Date : 6/14/2014
Page No : 2

	Santa Anita Ave Southbound				Valley Blvd Westbound				Santa Anita Ave Northbound				Valley Blvd Eastbound				
Start Time	Left	Thru	Right	App. Total	Left	Thru	Right	App. Total	Left	Thru	Right	App. Total	Left	Thru	Right	App. Total	Int. Total
Peak Hour Analysis From 12:00 PM to 01:45 PM - Peak 1 of 1																	
Peak Hour for Entire Intersection Begins at 01:00 PM																	
01:00 PM	20	180	31	231	25	118	15	158	55	181	**15**	251	**56**	**126**	0	**182**	822
01:15 PM	**21**	**190**	28	**239**	31	115	**17**	163	90	**189**	15	**294**	29	114	0	143	839
01:30 PM	15	182	22	219	**42**	117	10	169	84	179	13	276	46	117	0	163	827
01:45 PM	16	169	**36**	221	41	**125**	9	**175**	**93**	184	12	289	48	119	0	167	**852**
Total Volume	72	721	117	910	139	475	51	665	322	733	55	1110	179	476	0	655	3340
% App. Total	7.9	79.2	12.9		20.9	71.4	7.7		29	66	5		27.3	72.7	0		
PHF	.857	.949	.813	.952	.827	.950	.750	.950	.866	.970	.917	.944	.799	.944	.000	.900	.980

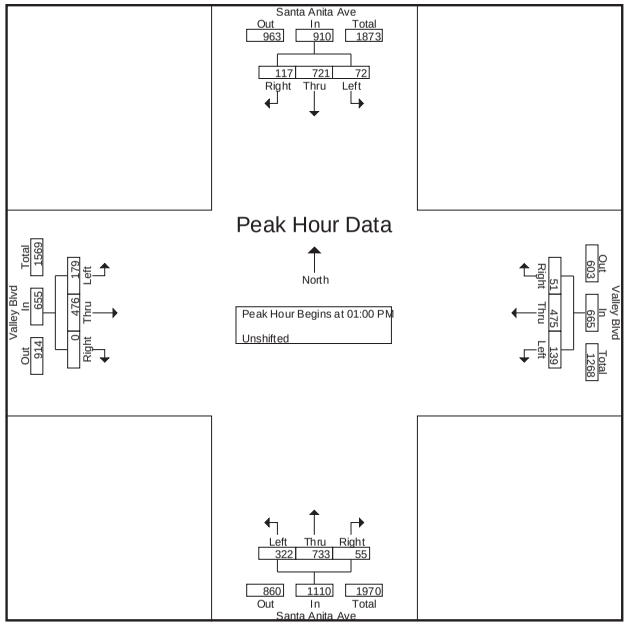

CITY TRAFFIC COUNTERS

626.991.7522

www.ctcounters.com

File Name : SAnita_Ramona
Site Code : 00000000
Start Date : 6/4/2014
Page No : 1

Groups Printed- Unshifted

	Santa Anita Ave Southbound			Ramona Blvd Westbound			Santa Anita Ave Northbound			Ramona Blvd Eastbound			
Start Time	Left	Thru	Right	Left	Thru	Right	Left	Thru	Right	Left	Thru	Right	Int. Total
07:00 AM	2	221	65	22	42	13	49	166	26	4	6	11	627
07:15 AM	11	232	32	37	43	16	43	210	30	11	12	21	698
07:30 AM	16	251	58	41	27	14	39	263	64	6	10	24	813
07:45 AM	15	267	35	61	37	18	26	241	74	8	11	26	819
Total	44	971	190	161	149	61	157	880	194	29	39	82	2957
08:00 AM	15	288	34	61	20	24	26	236	84	6	4	18	816
08:15 AM	13	270	25	45	24	23	19	211	48	13	9	19	719
08:30 AM	8	281	19	53	13	18	25	225	49	7	8	19	725
08:45 AM	7	280	12	38	19	15	17	221	46	5	10	19	689
Total	43	1119	90	197	76	80	87	893	227	31	31	75	2949
04:00 PM	12	209	10	47	8	10	24	272	47	16	19	20	694
04:15 PM	11	210	17	37	10	18	25	307	50	14	22	29	750
04:30 PM	12	214	16	49	9	16	24	301	62	17	38	40	798
04:45 PM	12	251	7	40	5	20	17	299	49	16	21	41	778
Total	47	884	50	173	32	64	90	1179	208	63	100	130	3020
05:00 PM	13	240	12	34	10	21	23	293	51	23	42	41	803
05:15 PM	16	205	16	35	11	19	21	307	53	29	41	42	795
05:30 PM	22	210	11	30	13	16	18	341	54	22	33	38	808
05:45 PM	23	229	13	43	13	14	21	293	59	45	54	50	857
Total	74	884	52	142	47	70	83	1234	217	119	170	171	3263
Grand Total	208	3858	382	673	304	275	417	4186	846	242	340	458	12189
Apprch %	4.7	86.7	8.6	53.8	24.3	22	7.7	76.8	15.5	23.3	32.7	44	
Total %	1.7	31.7	3.1	5.5	2.5	2.3	3.4	34.3	6.9	2	2.8	3.8	

CITY TRAFFIC COUNTERS

626.991.7522

www.ctcounters.com

File Name : SAnita_Ramona
Site Code : 00000000
Start Date : 6/4/2014
Page No : 2

	Santa Anita Ave Southbound				Ramona Blvd Westbound				Santa Anita Ave Northbound				Ramona Blvd Eastbound				
Start Time	Left	Thru	Right	App. Total	Left	Thru	Right	App. Total	Left	Thru	Right	App. Total	Left	Thru	Right	App. Total	Int. Total
Peak Hour Analysis From 07:00 AM to 11:45 AM - Peak 1 of 1																	
Peak Hour for Entire Intersection Begins at 07:30 AM																	
07:30 AM	**16**	251	**58**	325	41	27	14	82	**39**	**263**	64	**366**	6	10	24	40	813
07:45 AM	15	267	35	317	**61**	**37**	18	**116**	26	241	74	341	8	**11**	**26**	**45**	**819**
08:00 AM	15	**288**	34	**337**	61	20	**24**	105	26	236	**84**	346	6	4	18	28	816
08:15 AM	13	270	25	308	45	24	23	92	19	211	48	278	**13**	9	19	41	719
Total Volume	59	1076	152	1287	208	108	79	395	110	951	270	1331	33	34	87	154	3167
% App. Total	4.6	83.6	11.8		52.7	27.3	20		8.3	71.5	20.3		21.4	22.1	56.5		
PHF	.922	.934	.655	.955	.852	.730	.823	.851	.705	.904	.804	.909	.635	.773	.837	.856	.967

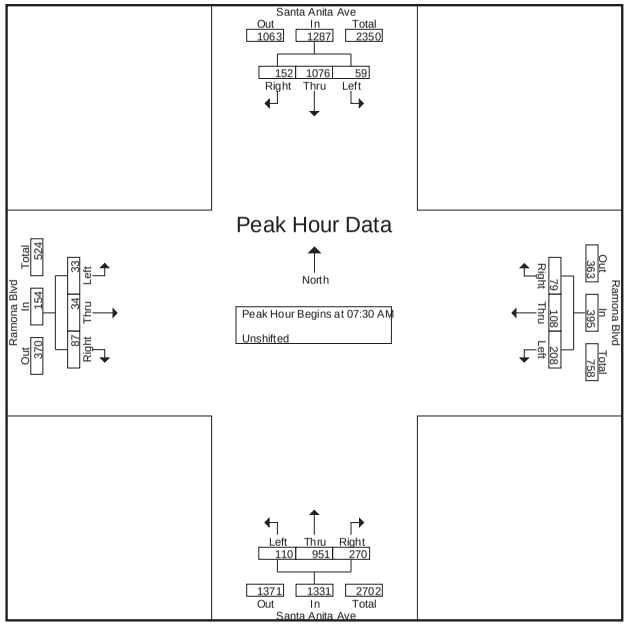

CITY TRAFFIC COUNTERS

626.991.7522

www.ctcounters.com

File Name : SAnita_Ramona
Site Code : 00000000
Start Date : 6/4/2014
Page No : 3

	Santa Anita Ave Southbound				Ramona Blvd Westbound				Santa Anita Ave Northbound				Ramona Blvd Eastbound				
Start Time	Left	Thru	Right	App. Total	Left	Thru	Right	App. Total	Left	Thru	Right	App. Total	Left	Thru	Right	App. Total	Int. Total
Peak Hour Analysis From 12:00 PM to 05:45 PM - Peak 1 of 1																	
Peak Hour for Entire Intersection Begins at 05:00 PM																	
05:00 PM	13	**240**	12	**265**	34	10	**21**	65	**23**	293	51	367	23	42	41	106	803
05:15 PM	16	205	**16**	237	35	11	19	65	21	307	53	381	29	41	42	112	795
05:30 PM	22	210	11	243	30	**13**	16	59	18	**341**	54	**413**	22	33	38	93	808
05:45 PM	**23**	229	13	265	**43**	13	14	**70**	21	293	**59**	373	**45**	**54**	**50**	**149**	**857**
Total Volume	74	884	52	1010	142	47	70	259	83	1234	217	1534	119	170	171	460	3263
% App. Total	7.3	87.5	5.1		54.8	18.1	27		5.4	80.4	14.1		25.9	37	37.2		
PHF	.804	.921	.813	.953	.826	.904	.833	.925	.902	.905	.919	.929	.661	.787	.855	.772	.952

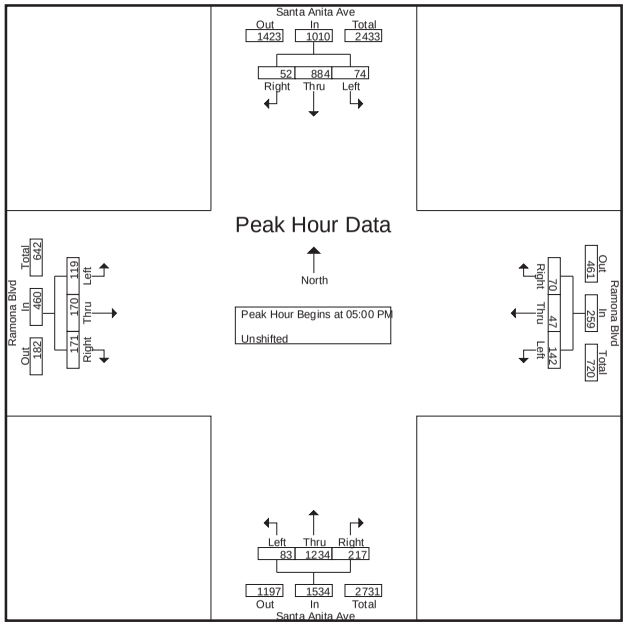

CITY TRAFFIC COUNTERS

626.991.7522

www.ctcounters.com

File Name : SAnita_Ramona_Sat
Site Code : 00000000
Start Date : 6/14/2014
Page No : 1

Groups Printed- Unshifted

	Santa Anita Ave Southbound			Ramona Blvd Westbound			Santa Anita Ave Northbound			Ramona Blvd Eastbound			
Start Time	Left	Thru	Right	Left	Thru	Right	Left	Thru	Right	Left	Thru	Right	Int. Total
12:00 PM	13	225	7	34	2	13	12	257	34	5	6	3	611
12:15 PM	8	228	13	36	5	15	9	242	36	7	6	11	616
12:30 PM	10	220	7	43	4	12	10	255	30	4	2	12	609
12:45 PM	3	238	7	49	12	10	9	259	37	12	6	8	650
Total	34	911	34	162	23	50	40	1013	137	28	20	34	2486
01:00 PM	7	242	10	33	8	11	8	261	34	8	5	12	639
01:15 PM	13	251	5	34	6	22	14	303	46	7	7	7	715
01:30 PM	7	257	15	38	5	12	14	264	36	10	6	10	674
01:45 PM	6	248	9	49	10	17	9	293	32	7	6	10	696
Total	33	998	39	154	29	62	45	1121	148	32	24	39	2724
Grand Total	67	1909	73	316	52	112	85	2134	285	60	44	73	5210
Apprch %	3.3	93.2	3.6	65.8	10.8	23.3	3.4	85.2	11.4	33.9	24.9	41.2	
Total %	1.3	36.6	1.4	6.1	1	2.1	1.6	41	5.5	1.2	0.8	1.4	

CITY TRAFFIC COUNTERS

626.991.7522

www.ctcounters.com

File Name : SAnita_Ramona_Sat
Site Code : 00000000
Start Date : 6/14/2014
Page No : 2

	Santa Anita Ave Southbound				Ramona Blvd Westbound				Santa Anita Ave Northbound				Ramona Blvd Eastbound				
Start Time	Left	Thru	Right	App. Total	Left	Thru	Right	App. Total	Left	Thru	Right	App. Total	Left	Thru	Right	App. Total	Int. Total
Peak Hour Analysis From 12:00 PM to 01:45 PM - Peak 1 of 1																	
Peak Hour for Entire Intersection Begins at 01:00 PM																	
01:00 PM	7	242	10	259	33	8	11	52	8	261	34	303	8	5	**12**	25	639
01:15 PM	**13**	251	5	269	34	6	**22**	62	**14**	**303**	**46**	**363**	7	**7**	7	21	**715**
01:30 PM	7	**257**	**15**	**279**	38	5	12	55	14	264	36	314	**10**	6	10	**26**	674
01:45 PM	6	248	9	263	**49**	**10**	17	**76**	9	293	32	334	7	6	10	23	696
Total Volume	33	998	39	1070	154	29	62	245	45	1121	148	1314	32	24	39	95	2724
% App. Total	3.1	93.3	3.6		62.9	11.8	25.3		3.4	85.3	11.3		33.7	25.3	41.1		
PHF	.635	.971	.650	.959	.786	.725	.705	.806	.804	.925	.804	.905	.800	.857	.813	.913	.952

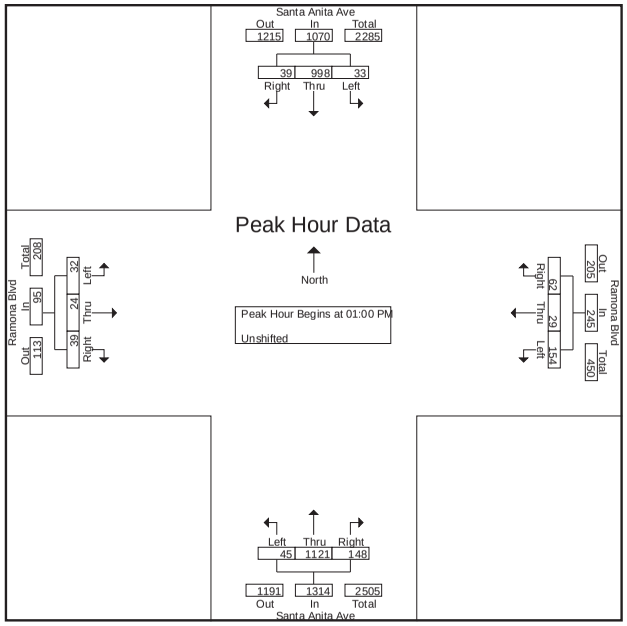

CITY TRAFFIC COUNTERS

626.991.7522

www.ctcounters.com

File Name : SA_Garvey
Site Code : 00000000
Start Date : 6/5/2014
Page No : 1

Groups Printed- Unshifted

	Santa Anita Ave Southbound			Garvey Ave Westbound			Santa Anita Ave Northbound			Garvey Ave Eastbound			
Start Time	Left	Thru	Right	Left	Thru	Right	Left	Thru	Right	Left	Thru	Right	Int. Total
07:00 AM	10	120	33	17	154	31	11	93	15	37	66	11	598
07:15 AM	13	111	39	17	130	22	7	109	7	45	85	6	591
07:30 AM	8	166	38	23	250	24	14	131	11	41	145	12	863
07:45 AM	13	211	49	33	266	10	15	121	15	48	147	17	945
Total	44	608	159	90	800	87	47	454	48	171	443	46	2997
08:00 AM	16	179	52	20	227	15	15	100	3	43	112	22	804
08:15 AM	13	157	64	25	196	21	17	96	13	61	108	18	789
08:30 AM	10	157	65	26	191	17	10	89	4	42	99	8	718
08:45 AM	12	177	61	23	178	15	14	91	4	41	110	12	738
Total	51	670	242	94	792	68	56	376	24	187	429	60	3049
04:00 PM	19	156	36	20	116	29	21	142	16	50	209	22	836
04:15 PM	19	141	36	18	124	24	10	129	12	40	223	19	795
04:30 PM	14	131	34	27	119	30	13	125	7	43	255	19	817
04:45 PM	19	139	38	19	143	22	10	128	15	57	220	15	825
Total	71	567	144	84	502	105	54	524	50	190	907	75	3273
05:00 PM	15	196	39	24	147	25	9	157	12	63	212	14	913
05:15 PM	16	191	38	27	164	23	8	129	12	61	240	15	924
05:30 PM	13	173	39	17	147	20	12	151	16	65	256	19	928
05:45 PM	15	191	37	18	137	20	19	123	14	54	207	12	847
Total	59	751	153	86	595	88	48	560	54	243	915	60	3612
Grand Total	225	2596	698	354	2689	348	205	1914	176	791	2694	241	12931
Apprch %	6.4	73.8	19.8	10.4	79.3	10.3	8.9	83.4	7.7	21.2	72.3	6.5	
Total %	1.7	20.1	5.4	2.7	20.8	2.7	1.6	14.8	1.4	6.1	20.8	1.9	

CITY TRAFFIC COUNTERS

626.991.7522

www.ctcounters.com

File Name : SA_Garvey
Site Code : 00000000
Start Date : 6/5/2014
Page No : 2

	Santa Anita Ave Southbound				Garvey Ave Westbound				Santa Anita Ave Northbound				Garvey Ave Eastbound				
Start Time	Left	Thru	Right	App. Total	Left	Thru	Right	App. Total	Left	Thru	Right	App. Total	Left	Thru	Right	App. Total	Int. Total
Peak Hour Analysis From 07:00 AM to 11:45 AM - Peak 1 of 1																	
Peak Hour for Entire Intersection Begins at 07:30 AM																	
07:30 AM	8	166	38	212	23	250	**24**	297	14	**131**	11	**156**	41	145	12	198	863
07:45 AM	13	**211**	49	**273**	**33**	**266**	10	**309**	15	121	**15**	151	48	**147**	17	**212**	**945**
08:00 AM	**16**	179	52	247	20	227	15	262	15	100	3	118	43	112	**22**	177	804
08:15 AM	13	157	**64**	234	25	196	21	242	**17**	96	13	126	**61**	108	18	187	789
Total Volume	50	713	203	966	101	939	70	1110	61	448	42	551	193	512	69	774	3401
% App. Total	5.2	73.8	21		9.1	84.6	6.3		11.1	81.3	7.6		24.9	66.1	8.9		
PHF	.781	.845	.793	.885	.765	.883	.729	.898	.897	.855	.700	.883	.791	.871	.784	.913	.900

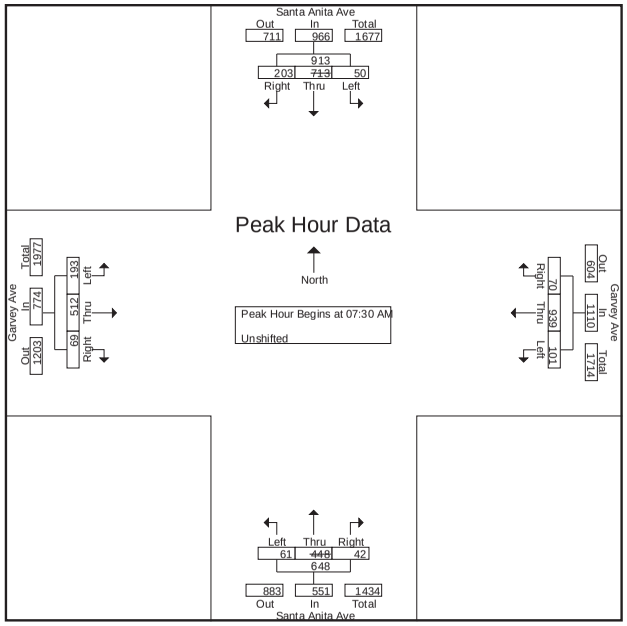

CITY TRAFFIC COUNTERS
626.991.7522
www.ctcounters.com

File Name : SA_Garvey
Site Code : 00000000
Start Date : 6/5/2014
Page No : 3

	Santa Anita Ave Southbound				Garvey Ave Westbound				Santa Anita Ave Northbound				Garvey Ave Eastbound				
Start Time	Left	Thru	Right	App. Total	Left	Thru	Right	App. Total	Left	Thru	Right	App. Total	Left	Thru	Right	App. Total	Int. Total
Peak Hour Analysis From 12:00 PM to 05:45 PM - Peak 1 of 1																	
Peak Hour for Entire Intersection Begins at 05:00 PM																	
05:00 PM	15	**196**	**39**	**250**	24	147	**25**	196	9	**157**	12	178	63	212	14	289	913
05:15 PM	**16**	191	38	245	**27**	**164**	23	**214**	8	129	12	149	61	240	15	316	924
05:30 PM	13	173	39	225	17	147	20	184	12	151	**16**	**179**	**65**	**256**	**19**	**340**	**928**
05:45 PM	15	191	37	243	18	137	20	175	**19**	123	14	156	54	207	12	273	847
Total Volume	59	751	153	963	86	595	88	769	48	560	54	662	243	915	60	1218	3612
% App. Total	6.1	78	15.9		11.2	77.4	11.4		7.3	84.6	8.2		20	75.1	4.9		
PHF	.922	.958	.981	.963	.796	.907	.880	.898	.632	.892	.844	.925	.935	.894	.789	.896	.973

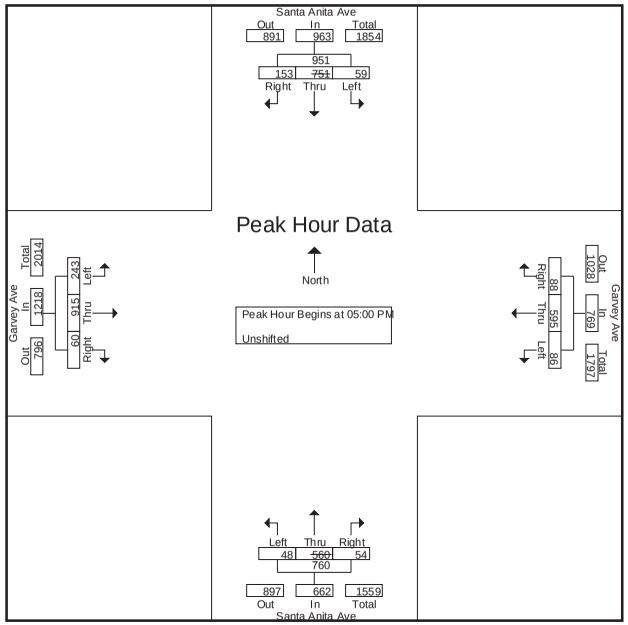

CITY TRAFFIC COUNTERS
626.991.7522
www.ctcounters.com

File Name : SAnita_Garvey_Sat
Site Code : 00000000
Start Date : 6/14/2014
Page No : 1

Groups Printed- Unshifted

	Santa Anita Ave Southbound			Garvey Ave Westbound			Santa Anita Ave Northbound			Garvey Ave Eastbound			
Start Time	Left	Thru	Right	Left	Thru	Right	Left	Thru	Right	Left	Thru	Right	Int. Total
12:00 PM	26	107	49	27	154	30	12	70	22	38	182	10	727
12:15 PM	24	99	69	32	226	31	23	74	15	72	201	11	877
12:30 PM	28	89	95	25	172	30	33	66	11	57	216	16	838
12:45 PM	19	104	66	27	207	35	15	67	12	65	205	10	832
Total	97	399	279	111	759	126	83	277	60	232	804	47	3274
01:00 PM	26	115	75	17	178	35	13	56	10	36	213	16	790
01:15 PM	23	108	76	25	173	38	22	75	10	62	199	14	825
01:30 PM	29	136	71	17	181	41	22	85	21	56	223	19	901
01:45 PM	31	128	79	20	189	50	48	87	18	78	231	7	966
Total	109	487	301	79	721	164	105	303	59	232	866	56	3482
Grand Total	206	886	580	190	1480	290	188	580	119	464	1670	103	6756
Apprch %	12.3	53	34.7	9.7	75.5	14.8	21.2	65.4	13.4	20.7	74.7	4.6	
Total %	3	13.1	8.6	2.8	21.9	4.3	2.8	8.6	1.8	6.9	24.7	1.5	

CITY TRAFFIC COUNTERS
626.991.7522
www.ctcounters.com

File Name : SAnita_Garvey_Sat
Site Code : 00000000
Start Date : 6/14/2014
Page No : 2

	Santa Anita Ave Southbound				Garvey Ave Westbound				Santa Anita Ave Northbound				Garvey Ave Eastbound				
Start Time	Left	Thru	Right	App. Total	Left	Thru	Right	App. Total	Left	Thru	Right	App. Total	Left	Thru	Right	App. Total	Int. Total
Peak Hour Analysis From 12:00 PM to 01:45 PM - Peak 1 of 1																	
Peak Hour for Entire Intersection Begins at 01:00 PM																	
01:00 PM	26	115	75	216	17	178	35	230	13	56	10	79	36	213	16	265	790
01:15 PM	23	108	76	207	**25**	173	38	236	22	75	10	107	62	199	14	275	825
01:30 PM	29	**136**	71	236	17	181	41	239	22	85	**21**	128	56	223	**19**	298	901
01:45 PM	**31**	128	**79**	**238**	20	**189**	**50**	**259**	**48**	**87**	18	**153**	**78**	**231**	7	**316**	**966**
Total Volume	109	487	301	897	79	721	164	964	105	303	59	467	232	866	56	1154	3482
% App. Total	12.2	54.3	33.6		8.2	74.8	17		22.5	64.9	12.6		20.1	75	4.9		
PHF	.879	.895	.953	.942	.790	.954	.820	.931	.547	.871	.702	.763	.744	.937	.737	.913	.901

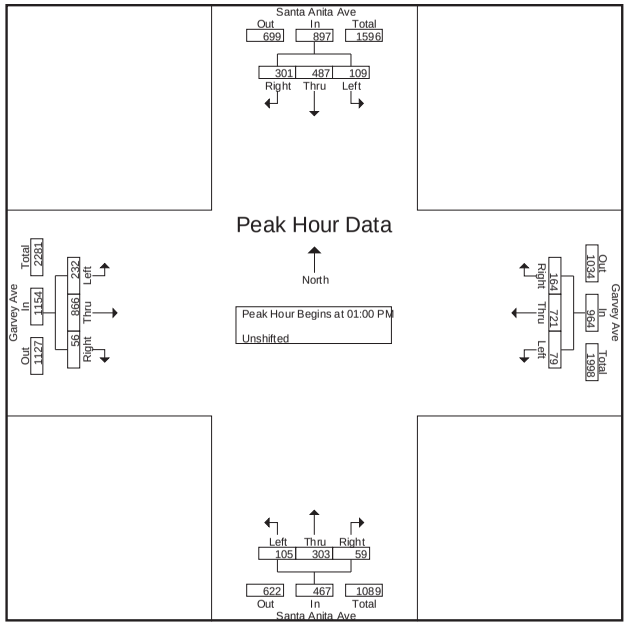

CITY TRAFFIC COUNTERS
626.991.7522
www.ctcounters.com

File Name : Tyler_Valley
Site Code : 00000000
Start Date : 6/5/2014
Page No : 1

Groups Printed- Unshifted

	Tyler Ave Southbound			Valley Blvd Westbound			Tyler Ave Northbound			Valley Blvd Eastbound			
Start Time	Left	Thru	Right	Left	Thru	Right	Left	Thru	Right	Left	Thru	Right	Int. Total
07:00 AM	19	47	12	2	154	35	11	25	5	6	71	4	391
07:15 AM	21	54	15	4	180	27	13	31	9	11	76	8	449
07:30 AM	30	92	27	4	224	35	22	48	6	21	88	9	606
07:45 AM	56	124	32	19	187	39	14	53	4	12	104	13	657
Total	126	317	86	29	745	136	60	157	24	50	339	34	2103
08:00 AM	39	77	28	9	197	34	16	52	4	16	104	7	583
08:15 AM	38	75	17	8	222	29	23	43	4	5	114	10	588
08:30 AM	31	62	20	6	166	42	19	40	5	4	105	10	510
08:45 AM	33	53	16	11	177	31	13	42	4	10	80	8	478
Total	141	267	81	34	762	136	71	177	17	35	403	35	2159
04:00 PM	25	44	10	14	138	34	21	74	22	14	205	4	605
04:15 PM	42	34	15	24	125	29	25	63	18	21	184	8	588
04:30 PM	39	48	8	21	124	32	37	65	21	16	194	7	612
04:45 PM	29	58	23	18	121	27	26	73	20	15	226	12	648
Total	135	184	56	77	508	122	109	275	81	66	809	31	2453
05:00 PM	34	65	16	10	135	34	30	80	12	28	226	12	682
05:15 PM	24	60	16	11	147	30	24	73	10	18	193	14	620
05:30 PM	31	39	12	8	137	41	28	77	10	13	178	11	585
05:45 PM	30	66	14	7	126	23	34	80	10	34	221	12	657
Total	119	230	58	36	545	128	116	310	42	93	818	49	2544
Grand Total	521	998	281	176	2560	522	356	919	164	244	2369	149	9259
Apprch %	28.9	55.4	15.6	5.4	78.6	16	24.7	63.9	11.4	8.8	85.8	5.4	
Total %	5.6	10.8	3	1.9	27.6	5.6	3.8	9.9	1.8	2.6	25.6	1.6	

CITY TRAFFIC COUNTERS

626.991.7522

www.ctcounters.com

File Name : Tyler_Valley
Site Code : 00000000
Start Date : 6/5/2014
Page No : 2

	Tyler Ave Southbound				Valley Blvd Westbound				Tyler Ave Northbound				Valley Blvd Eastbound				
Start Time	Left	Thru	Right	App. Total	Left	Thru	Right	App. Total	Left	Thru	Right	App. Total	Left	Thru	Right	App. Total	Int. Total
Peak Hour Analysis From 07:00 AM to 11:45 AM - Peak 1 of 1																	
Peak Hour for Entire Intersection Begins at 07:30 AM																	
07:30 AM	30	92	27	149	4	**224**	35	**263**	22	48	**6**	**76**	**21**	88	9	118	606
07:45 AM	**56**	**124**	**32**	**212**	**19**	187	**39**	245	14	**53**	4	71	12	104	**13**	**129**	**657**
08:00 AM	39	77	28	144	9	197	34	240	16	52	4	72	16	104	7	127	583
08:15 AM	38	75	17	130	8	222	29	259	**23**	43	4	70	5	**114**	10	129	588
Total Volume	163	368	104	635	40	830	137	1007	75	196	18	289	54	410	39	503	2434
% App. Total	25.7	58	16.4		4	82.4	13.6		26	67.8	6.2		10.7	81.5	7.8		
PHF	.728	.742	.813	.749	.526	.926	.878	.957	.815	.925	.750	.951	.643	.899	.750	.975	.926

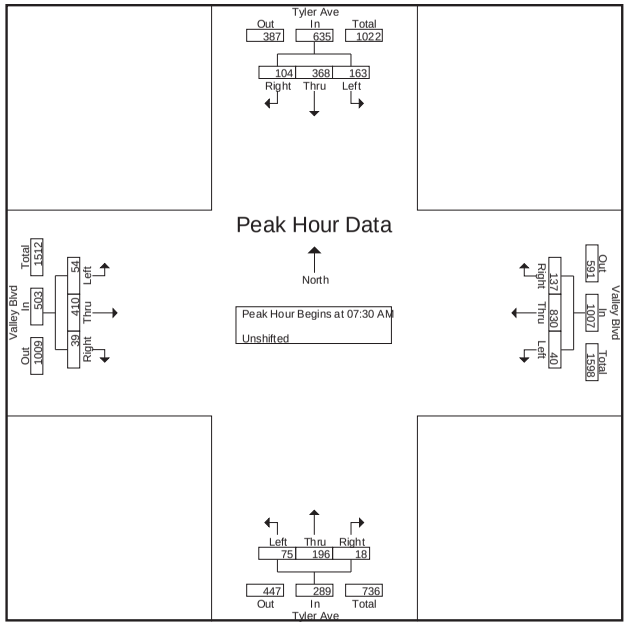

CITY TRAFFIC COUNTERS

626.991.7522

www.ctcounters.com

File Name : Tyler_Valley
Site Code : 00000000
Start Date : 6/5/2014
Page No : 3

	Tyler Ave Southbound				Valley Blvd Westbound				Tyler Ave Northbound				Valley Blvd Eastbound				
Start Time	Left	Thru	Right	App. Total	Left	Thru	Right	App. Total	Left	Thru	Right	App. Total	Left	Thru	Right	App. Total	Int. Total
Peak Hour Analysis From 12:00 PM to 05:45 PM - Peak 1 of 1																	
Peak Hour for Entire Intersection Begins at 04:30 PM																	
04:30 PM	**39**	48	8	95	**21**	124	32	177	**37**	65	**21**	**123**	16	194	7	217	612
04:45 PM	29	58	**23**	110	18	121	27	166	26	73	20	119	15	**226**	12	253	648
05:00 PM	34	**65**	16	**115**	10	135	**34**	179	30	**80**	12	122	**28**	226	12	**266**	**682**
05:15 PM	24	60	16	100	11	**147**	30	**188**	24	73	10	107	18	193	**14**	225	620
Total Volume	126	231	63	420	60	527	123	710	117	291	63	471	77	839	45	961	2562
% App. Total	30	55	15		8.5	74.2	17.3		24.8	61.8	13.4		8	87.3	4.7		
PHF	.808	.888	.685	.913	.714	.896	.904	.944	.791	.909	.750	.957	.688	.928	.804	.903	.939

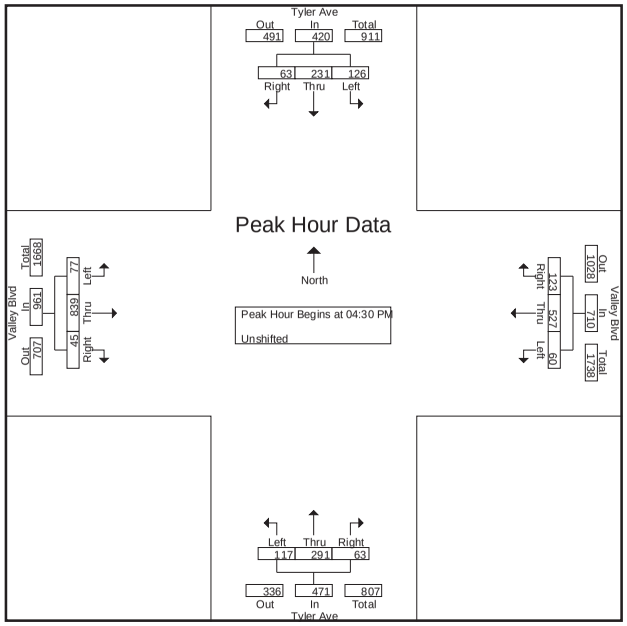

CITY TRAFFIC COUNTERS

626.991.7522

www.ctcounters.com

File Name : Tyler_Valley_Sat
Site Code : 00000000
Start Date : 6/14/2014
Page No : 1

Groups Printed- Unshifted

	Tyler Ave Southbound			Valley Blvd Westbound			Tyler Ave Northbound			Valley Blvd Eastbound			
Start Time	Left	Thru	Right	Left	Thru	Right	Left	Thru	Right	Left	Thru	Right	Int. Total
12:00 PM	29	35	22	18	139	26	24	44	15	19	140	13	524
12:15 PM	36	36	18	12	114	36	13	43	18	18	120	10	474
12:30 PM	32	38	16	19	102	29	18	36	10	16	141	12	469
12:45 PM	31	35	16	15	119	25	19	37	12	14	150	12	485
Total	128	144	72	64	474	116	74	160	55	67	551	47	1952
01:00 PM	34	33	12	10	127	26	27	44	11	18	145	14	501
01:15 PM	26	42	13	16	131	18	24	36	13	22	134	7	482
01:30 PM	30	44	13	16	126	23	15	38	17	20	139	10	491
01:45 PM	28	44	14	13	143	25	15	48	14	18	131	13	506
Total	118	163	52	55	527	92	81	166	55	78	549	44	1980
Grand Total	246	307	124	119	1001	208	155	326	110	145	1100	91	3932
Apprch %	36.3	45.3	18.3	9	75.4	15.7	26.2	55.2	18.6	10.9	82.3	6.8	
Total %	6.3	7.8	3.2	3	25.5	5.3	3.9	8.3	2.8	3.7	28	2.3	

CITY TRAFFIC COUNTERS

626.991.7522

www.ctcounters.com

File Name : Tyler_Valley_Sat
Site Code : 00000000
Start Date : 6/14/2014
Page No : 2

	Tyler Ave Southbound				Valley Blvd Westbound				Tyler Ave Northbound				Valley Blvd Eastbound				
Start Time	Left	Thru	Right	App. Total	Left	Thru	Right	App. Total	Left	Thru	Right	App. Total	Left	Thru	Right	App. Total	Int. Total
Peak Hour Analysis From 12:00 PM to 01:45 PM - Peak 1 of 1																	
Peak Hour for Entire Intersection Begins at 01:00 PM																	
01:00 PM	**34**	33	12	79	10	127	**26**	163	**27**	44	11	**82**	18	**145**	**14**	**177**	501
01:15 PM	26	42	13	81	**16**	131	18	165	24	36	13	73	**22**	134	7	163	482
01:30 PM	30	**44**	13	**87**	16	126	23	165	15	38	**17**	70	20	139	10	169	491
01:45 PM	28	44	**14**	86	13	**143**	25	**181**	15	**48**	14	77	18	131	13	162	**506**
Total Volume	118	163	52	333	55	527	92	674	81	166	55	302	78	549	44	671	1980
% App. Total	35.4	48.9	15.6		8.2	78.2	13.6		26.8	55	18.2		11.6	81.8	6.6		
PHF	.868	.926	.929	.957	.859	.921	.885	.931	.750	.865	.809	.921	.886	.947	.786	.948	.978

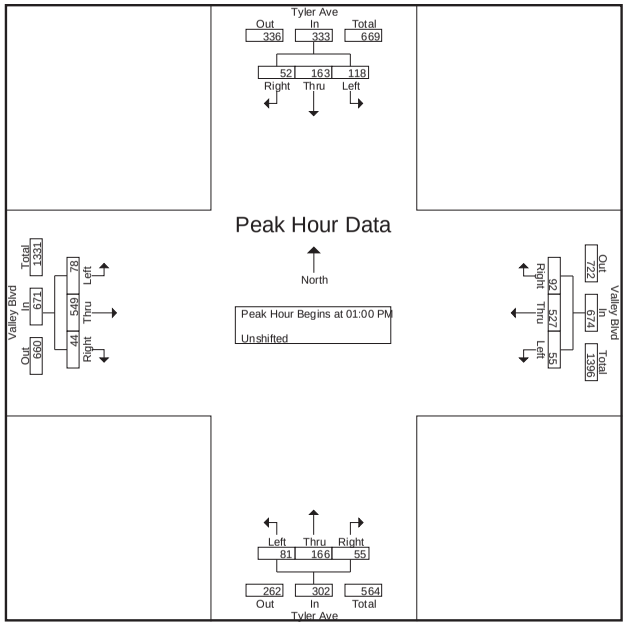

CITY TRAFFIC COUNTERS

626.991.7522

www.ctcounters.com

File Name : Tyler_Ramona
Site Code : 00000000
Start Date : 6/5/2014
Page No : 1

Groups Printed- Unshifted

	Tyler Ave Southbound			Ramona Blvd Westbound			Tyler Ave Northbound			Ramona Blvd Eastbound			
Start Time	Left	Thru	Right	Left	Thru	Right	Left	Thru	Right	Left	Thru	Right	Int. Total
07:00 AM	8	32	16	9	60	10	4	25	6	6	23	5	204
07:15 AM	5	29	11	11	38	6	3	34	14	10	25	2	188
07:30 AM	16	67	21	6	94	10	8	51	11	22	49	3	358
07:45 AM	38	81	35	18	111	12	20	52	15	9	89	3	483
Total	67	209	83	44	303	38	35	162	46	47	186	13	1233
08:00 AM	7	50	26	12	88	10	12	39	11	9	58	5	327
08:15 AM	8	67	30	15	105	8	10	36	5	13	42	3	342
08:30 AM	8	69	21	14	71	5	9	49	11	16	47	7	327
08:45 AM	9	49	18	18	67	5	13	47	12	10	38	3	289
Total	32	235	95	59	331	28	44	171	39	48	185	18	1285
04:00 PM	13	54	11	12	50	11	3	61	10	23	70	7	325
04:15 PM	9	65	22	24	50	9	12	65	19	20	65	5	365
04:30 PM	3	73	13	19	59	14	6	83	22	28	98	8	426
04:45 PM	4	62	15	17	56	9	7	41	14	22	75	9	331
Total	29	254	61	72	215	43	28	250	65	93	308	29	1447
05:00 PM	5	70	11	19	77	10	9	53	17	21	82	7	381
05:15 PM	4	83	12	22	67	11	8	63	21	26	93	8	418
05:30 PM	9	52	13	26	69	12	11	53	17	18	97	4	381
05:45 PM	16	75	14	17	62	10	16	83	19	30	95	6	443
Total	34	280	50	84	275	43	44	252	74	95	367	25	1623
Grand Total	162	978	289	259	1124	152	151	835	224	283	1046	85	5588
Apprch %	11.3	68.4	20.2	16.9	73.2	9.9	12.5	69	18.5	20	74	6	
Total %	2.9	17.5	5.2	4.6	20.1	2.7	2.7	14.9	4	5.1	18.7	1.5	

CITY TRAFFIC COUNTERS

626.991.7522

www.ctcounters.com

File Name : Tyler_Ramona
Site Code : 00000000
Start Date : 6/5/2014
Page No : 2

	Tyler Ave Southbound				Ramona Blvd Westbound				Tyler Ave Northbound				Ramona Blvd Eastbound				
Start Time	Left	Thru	Right	App. Total	Left	Thru	Right	App. Total	Left	Thru	Right	App. Total	Left	Thru	Right	App. Total	Int. Total
Peak Hour Analysis From 07:00 AM to 11:45 AM - Peak 1 of 1																	
Peak Hour for Entire Intersection Begins at 07:30 AM																	
07:30 AM	16	67	21	104	6	94	10	110	8	51	11	70	**22**	49	3	74	358
07:45 AM	**38**	**81**	**35**	**154**	**18**	**111**	**12**	**141**	**20**	**52**	**15**	**87**	9	**89**	3	**101**	**483**
08:00 AM	7	50	26	83	12	88	10	110	12	39	11	62	9	58	**5**	72	327
08:15 AM	8	67	30	105	15	105	8	128	10	36	5	51	13	42	3	58	342
Total Volume	69	265	112	446	51	398	40	489	50	178	42	270	53	238	14	305	1510
% App. Total	15.5	59.4	25.1		10.4	81.4	8.2		18.5	65.9	15.6		17.4	78	4.6		
PHF	.454	.818	.800	.724	.708	.896	.833	.867	.625	.856	.700	.776	.602	.669	.700	.755	.782

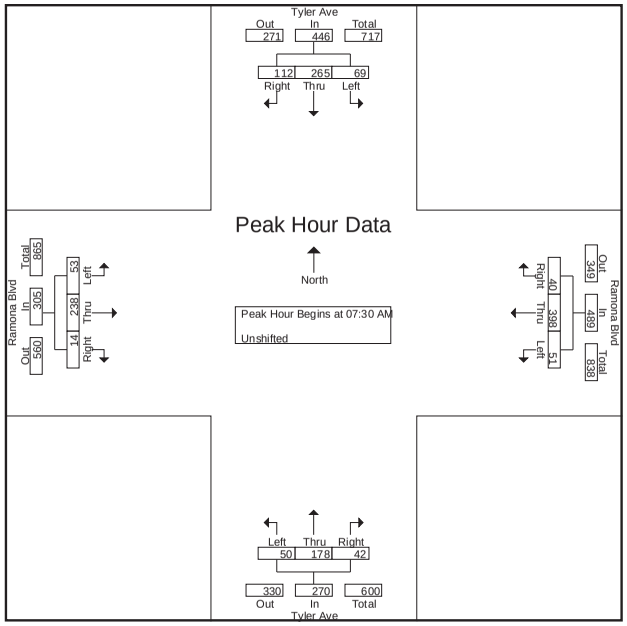

CITY TRAFFIC COUNTERS

626.991.7522

www.ctcounters.com

File Name : Tyler_Ramona
Site Code : 00000000
Start Date : 6/5/2014
Page No : 3

	Tyler Ave Southbound				Ramona Blvd Westbound				Tyler Ave Northbound				Ramona Blvd Eastbound				
Start Time	Left	Thru	Right	App. Total	Left	Thru	Right	App. Total	Left	Thru	Right	App. Total	Left	Thru	Right	App. Total	Int. Total
Peak Hour Analysis From 12:00 PM to 05:45 PM - Peak 1 of 1																	
Peak Hour for Entire Intersection Begins at 05:00 PM																	
05:00 PM	5	70	11	86	19	**77**	10	106	9	53	17	79	21	82	7	110	381
05:15 PM	4	**83**	12	99	22	67	11	100	8	63	**21**	92	26	93	**8**	127	418
05:30 PM	9	52	13	74	**26**	69	**12**	**107**	11	53	17	81	18	**97**	4	119	381
05:45 PM	**16**	75	**14**	**105**	17	62	10	89	**16**	**83**	19	**118**	**30**	95	6	**131**	**443**
Total Volume	34	280	50	364	84	275	43	402	44	252	74	370	95	367	25	487	1623
% App. Total	9.3	76.9	13.7		20.9	68.4	10.7		11.9	68.1	20		19.5	75.4	5.1		
PHF	.531	.843	.893	.867	.808	.893	.896	.939	.688	.759	.881	.784	.792	.946	.781	.929	.916

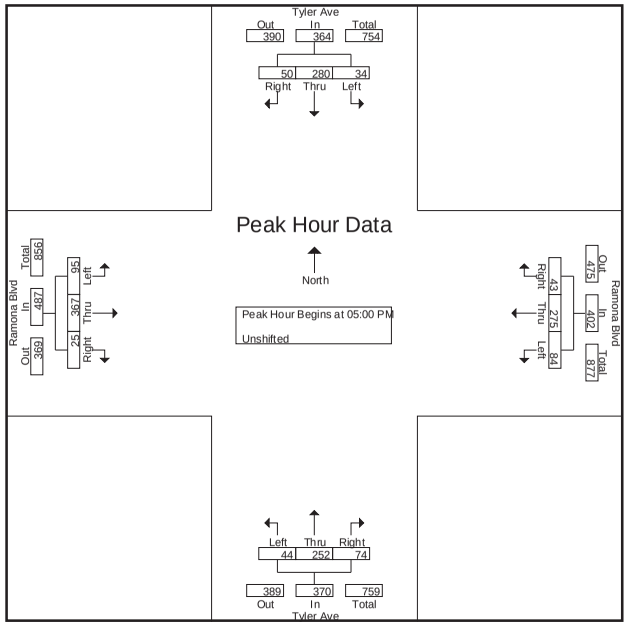

CITY TRAFFIC COUNTERS

626.991.7522

www.ctcounters.com

File Name : Tyler_Ramona_Sat
Site Code : 00000000
Start Date : 6/14/2014
Page No : 1

Groups Printed- Unshifted

	Tyler Ave Southbound			Ramona Blvd Westbound			Tyler Ave Northbound			Ramona Blvd Eastbound			
Start Time	Left	Thru	Right	Left	Thru	Right	Left	Thru	Right	Left	Thru	Right	Int. Total
12:00 PM	9	60	10	35	51	8	6	60	16	14	53	5	327
12:15 PM	10	55	20	21	50	9	11	59	21	16	56	12	340
12:30 PM	8	73	18	19	88	8	5	74	19	12	59	9	392
12:45 PM	3	45	14	22	57	12	9	46	18	17	48	7	298
Total	30	233	62	97	246	37	31	239	74	59	216	33	1357
01:00 PM	10	48	9	21	48	11	3	74	23	10	59	8	324
01:15 PM	9	52	17	26	66	8	6	57	31	15	51	8	346
01:30 PM	8	81	20	25	65	13	3	68	28	12	54	11	388
01:45 PM	5	57	15	20	68	8	4	70	34	13	32	7	333
Total	32	238	61	92	247	40	16	269	116	50	196	34	1391
Grand Total	62	471	123	189	493	77	47	508	190	109	412	67	2748
Apprch %	9.5	71.8	18.8	24.9	65	10.1	6.3	68.2	25.5	18.5	70.1	11.4	
Total %	2.3	17.1	4.5	6.9	17.9	2.8	1.7	18.5	6.9	4	15	2.4	

CITY TRAFFIC COUNTERS
626.991.7522
www.ctcounters.com

File Name : Tyler_Ramona_Sat
Site Code : 00000000
Start Date : 6/14/2014
Page No : 2

	Tyler Ave Southbound				Ramona Blvd Westbound				Tyler Ave Northbound				Ramona Blvd Eastbound				
Start Time	Left	Thru	Right	App. Total	Left	Thru	Right	App. Total	Left	Thru	Right	App. Total	Left	Thru	Right	App. Total	Int. Total
Peak Hour Analysis From 12:00 PM to 01:45 PM - Peak 1 of 1																	
Peak Hour for Entire Intersection Begins at 01:00 PM																	
01:00 PM	**10**	48	9	67	21	48	11	80	3	**74**	23	100	10	**59**	8	**77**	324
01:15 PM	9	52	17	78	**26**	66	8	100	**6**	57	31	94	**15**	51	8	74	346
01:30 PM	8	**81**	**20**	**109**	25	65	**13**	**103**	3	68	28	99	12	54	**11**	77	**388**
01:45 PM	5	57	15	77	20	**68**	8	96	4	70	**34**	**108**	13	32	7	52	333
Total Volume	32	238	61	331	92	247	40	379	16	269	116	401	50	196	34	280	1391
% App. Total	9.7	71.9	18.4		24.3	65.2	10.6		4	67.1	28.9		17.9	70	12.1		
PHF	.800	.735	.763	.759	.885	.908	.769	.920	.667	.909	.853	.928	.833	.831	.773	.909	.896

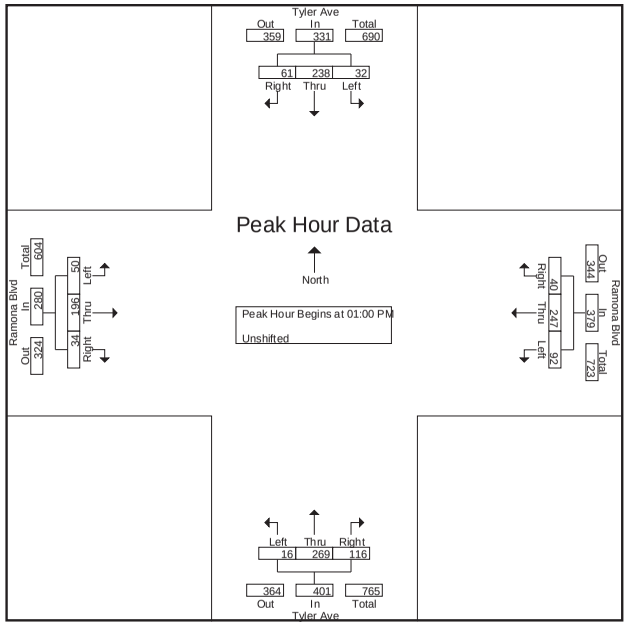

CITY TRAFFIC COUNTERS
626.991.7522
www.ctcounters.com

File Name : Tyler_Garvey
Site Code : 00000000
Start Date : 6/5/2014
Page No : 1

Groups Printed- Unshifted

	Tyler Ave Southbound			Garvey Ave Westbound			Tyler Ave Northbound			Garvey Ave Eastbound			
Start Time	Left	Thru	Right	Left	Thru	Right	Left	Thru	Right	Left	Thru	Right	Int. Total
07:00 AM	17	31	19	25	142	16	17	44	16	31	79	12	449
07:15 AM	16	47	20	42	170	18	13	65	15	25	107	13	551
07:30 AM	17	50	12	48	181	9	13	26	20	7	89	9	481
07:45 AM	9	41	19	52	245	6	13	42	16	5	111	11	570
Total	59	169	70	167	738	49	56	177	67	68	386	45	2051
08:00 AM	11	42	13	33	211	8	24	46	24	8	116	21	557
08:15 AM	9	42	16	48	193	17	18	48	24	4	106	12	537
08:30 AM	10	57	14	23	206	14	18	51	14	19	109	16	551
08:45 AM	6	47	11	35	194	13	31	38	20	11	108	15	529
Total	36	188	54	139	804	52	91	183	82	42	439	64	2174
04:00 PM	10	149	17	14	133	10	29	160	15	26	202	2	767
04:15 PM	15	153	17	19	145	11	25	131	16	30	222	6	790
04:30 PM	16	165	18	20	150	14	31	169	17	35	257	3	895
04:45 PM	30	160	19	21	169	16	30	161	16	27	259	9	917
Total	71	627	71	74	597	51	115	621	64	118	940	20	3369
05:00 PM	22	163	20	20	174	20	30	159	18	25	277	7	935
05:15 PM	16	154	19	13	160	22	26	162	17	24	273	4	890
05:30 PM	17	152	25	14	134	21	23	154	14	29	270	4	857
05:45 PM	11	160	24	16	160	15	22	133	14	26	220	6	807
Total	66	629	88	63	628	78	101	608	63	104	1040	21	3489
Grand Total	232	1613	283	443	2767	230	363	1589	276	332	2805	150	11083
Apprch %	10.9	75.8	13.3	12.9	80.4	6.7	16.3	71.3	12.4	10.1	85.3	4.6	
Total %	2.1	14.6	2.6	4	25	2.1	3.3	14.3	2.5	3	25.3	1.4	

CITY TRAFFIC COUNTERS
626.991.7522
www.ctcounters.com

File Name : Tyler_Garvey
Site Code : 00000000
Start Date : 6/5/2014
Page No : 2

	Tyler Ave Southbound				Garvey Ave Westbound				Tyler Ave Northbound				Garvey Ave Eastbound				
Start Time	Left	Thru	Right	App. Total	Left	Thru	Right	App. Total	Left	Thru	Right	App. Total	Left	Thru	Right	App. Total	Int. Total
Peak Hour Analysis From 07:00 AM to 11:45 AM - Peak 1 of 1																	
Peak Hour for Entire Intersection Begins at 07:45 AM																	
07:45 AM	9	41	**19**	69	**52**	**245**	6	**303**	13	42	16	71	5	111	11	127	**570**
08:00 AM	**11**	42	13	66	33	211	8	252	**24**	46	**24**	**94**	8	**116**	**21**	**145**	557
08:15 AM	9	42	16	67	48	193	**17**	258	18	48	24	90	4	106	12	122	537
08:30 AM	10	**57**	14	**81**	23	206	14	243	18	**51**	14	83	**19**	109	16	144	551
Total Volume	39	182	62	283	156	855	45	1056	73	187	78	338	36	442	60	538	2215
% App. Total	13.8	64.3	21.9		14.8	81	4.3		21.6	55.3	23.1		6.7	82.2	11.2		
PHF	.886	.798	.816	.873	.750	.872	.662	.871	.760	.917	.813	.899	.474	.953	.714	.928	.971

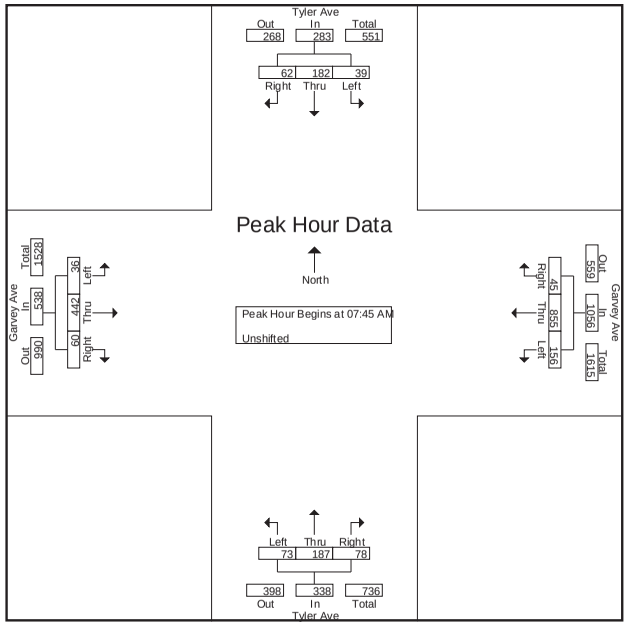

CITY TRAFFIC COUNTERS
626.991.7522
www.ctcounters.com

File Name : Tyler_Garvey
Site Code : 00000000
Start Date : 6/5/2014
Page No : 3

	Tyler Ave Southbound				Garvey Ave Westbound				Tyler Ave Northbound				Garvey Ave Eastbound				
Start Time	Left	Thru	Right	App. Total	Left	Thru	Right	App. Total	Left	Thru	Right	App. Total	Left	Thru	Right	App. Total	Int. Total
Peak Hour Analysis From 12:00 PM to 05:45 PM - Peak 1 of 1																	
Peak Hour for Entire Intersection Begins at 04:30 PM																	
04:30 PM	16	**165**	18	199	20	150	14	184	**31**	**169**	17	**217**	**35**	257	3	295	895
04:45 PM	**30**	160	19	**209**	**21**	169	16	206	30	161	16	207	27	259	**9**	295	917
05:00 PM	22	163	**20**	205	20	**174**	20	**214**	30	159	**18**	207	25	**277**	7	**309**	**935**
05:15 PM	16	154	19	189	13	160	**22**	195	26	162	17	205	24	273	4	301	890
Total Volume	84	642	76	802	74	653	72	799	117	651	68	836	111	1066	23	1200	3637
% App. Total	10.5	80	9.5		9.3	81.7	9		14	77.9	8.1		9.2	88.8	1.9		
PHF	.700	.973	.950	.959	.881	.938	.818	.933	.944	.963	.944	.963	.793	.962	.639	.971	.972

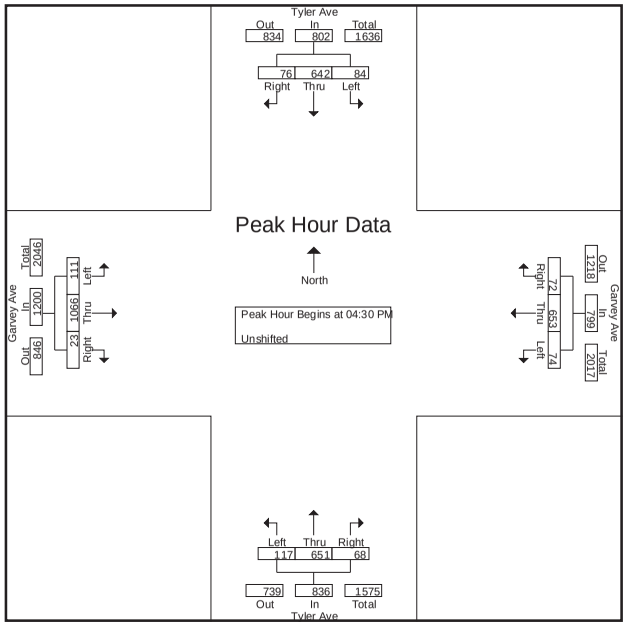

CITY TRAFFIC COUNTERS

626.991.7522

www.ctcounters.com

File Name : Tyler_Garvey_Sat
Site Code : 00000000
Start Date : 6/14/2014
Page No : 1

Groups Printed- Unshifted

	Tyler Ave Southbound			Garvey Ave Westbound			Tyler Ave Northbound			Garvey Ave Eastbound			
Start Time	Left	Thru	Right	Left	Thru	Right	Left	Thru	Right	Left	Thru	Right	Int. Total
12:00 PM	12	35	23	20	205	13	17	62	33	23	199	18	660
12:15 PM	16	46	25	26	256	14	22	48	34	21	190	16	714
12:30 PM	15	55	19	30	221	7	20	72	27	21	245	14	746
12:45 PM	12	39	19	20	203	9	25	54	24	16	200	26	647
Total	55	175	86	96	885	43	84	236	118	81	834	74	2767
01:00 PM	15	34	24	24	224	12	28	62	35	20	222	15	715
01:15 PM	10	41	17	20	172	13	20	60	29	26	216	15	639
01:30 PM	14	25	23	18	197	12	14	46	23	16	227	15	630
01:45 PM	11	48	20	19	189	8	17	60	28	16	242	11	669
Total	50	148	84	81	782	45	79	228	115	78	907	56	2653
Grand Total	105	323	170	177	1667	88	163	464	233	159	1741	130	5420
Apprch %	17.6	54	28.4	9.2	86.3	4.6	19	54	27.1	7.8	85.8	6.4	
Total %	1.9	6	3.1	3.3	30.8	1.6	3	8.6	4.3	2.9	32.1	2.4	

CITY TRAFFIC COUNTERS

626.991.7522

www.ctcounters.com

File Name : Tyler_Garvey_Sat
Site Code : 00000000
Start Date : 6/14/2014
Page No : 2

	Tyler Ave Southbound				Garvey Ave Westbound				Tyler Ave Northbound				Garvey Ave Eastbound				
Start Time	Left	Thru	Right	App. Total	Left	Thru	Right	App. Total	Left	Thru	Right	App. Total	Left	Thru	Right	App. Total	Int. Total
Peak Hour Analysis From 12:00 PM to 01:45 PM - Peak 1 of 1																	
Peak Hour for Entire Intersection Begins at 12:15 PM																	
12:15 PM	**16**	46	**25**	87	26	**256**	**14**	**296**	22	48	34	104	**21**	190	16	227	714
12:30 PM	15	**55**	19	**89**	**30**	221	7	258	20	**72**	27	119	21	**245**	14	**280**	**746**
12:45 PM	12	39	19	70	20	203	9	232	25	54	24	103	16	200	**26**	242	647
01:00 PM	15	34	24	73	24	224	12	260	**28**	62	**35**	**125**	20	222	15	257	715
Total Volume	58	174	87	319	100	904	42	1046	95	236	120	451	78	857	71	1006	2822
% App. Total	18.2	54.5	27.3		9.6	86.4	4		21.1	52.3	26.6		7.8	85.2	7.1		
PHF	.906	.791	.870	.896	.833	.883	.750	.883	.848	.819	.857	.902	.929	.874	.683	.898	.946

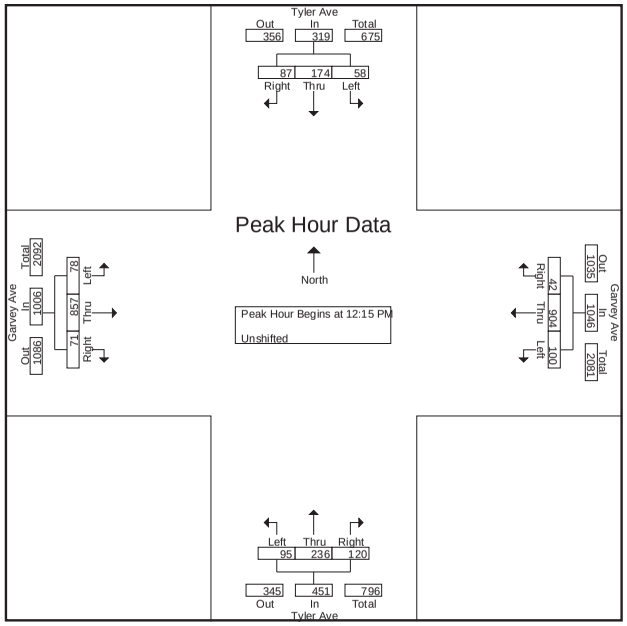

CITY TRAFFIC COUNTERS

626.991.7522

www.ctcounters.com

File Name : Valley_Ramona
Site Code : 00000000
Start Date : 7/8/2014
Page No : 1

Groups Printed- Unshifted

	Valley Blvd Southbound			Ramona Blvd Westbound			Valley Blvd Northbound			Ramona Blvd Eastbound			
Start Time	Left	Thru	Right	Left	Thru	Right	Left	Thru	Right	Left	Thru	Right	Int. Total
07:00 AM	20	54	0	9	73	49	31	95	3	0	25	16	375
07:15 AM	24	59	0	5	58	53	26	98	8	0	27	19	377
07:30 AM	21	81	1	8	53	72	32	112	2	1	17	22	422
07:45 AM	19	82	1	17	85	83	42	122	4	1	28	18	502
Total	84	276	2	39	269	257	131	427	17	2	97	75	1676
08:00 AM	33	95	0	14	71	63	21	109	7	0	20	18	451
08:15 AM	33	71	0	16	83	64	44	141	4	4	13	20	493
08:30 AM	46	102	0	3	87	62	39	131	4	0	28	22	524
08:45 AM	39	86	2	7	75	52	40	142	5	1	22	12	483
Total	151	354	2	40	316	241	144	523	20	5	83	72	1951
04:00 PM	82	145	4	7	31	45	26	95	10	1	52	36	534
04:15 PM	86	129	0	3	24	43	29	120	11	4	72	31	552
04:30 PM	74	129	4	2	48	47	19	87	12	3	100	46	571
04:45 PM	80	132	8	5	42	42	29	117	15	4	69	37	580
Total	322	535	16	17	145	177	103	419	48	12	293	150	2237
05:00 PM	90	159	1	13	33	54	29	99	14	5	89	35	621
05:15 PM	94	148	3	8	36	41	25	128	13	1	82	21	600
05:30 PM	93	133	0	8	50	44	35	138	15	2	121	42	681
05:45 PM	108	122	2	8	47	28	25	91	6	3	83	34	557
Total	385	562	6	37	166	167	114	456	48	11	375	132	2459
Grand Total	942	1727	26	133	896	842	492	1825	133	30	848	429	8323
Apprch %	35	64.1	1	7.1	47.9	45	20.1	74.5	5.4	2.3	64.9	32.8	
Total %	11.3	20.7	0.3	1.6	10.8	10.1	5.9	21.9	1.6	0.4	10.2	5.2	

CITY TRAFFIC COUNTERS

626.991.7522

www.ctcounters.com

File Name : Valley_Ramona
Site Code : 00000000
Start Date : 7/8/2014
Page No : 2

	Valley Blvd Southbound				Ramona Blvd Westbound				Valley Blvd Northbound				Ramona Blvd Eastbound				
Start Time	Left	Thru	Right	App. Total	Left	Thru	Right	App. Total	Left	Thru	Right	App. Total	Left	Thru	Right	App. Total	Int. Total
Peak Hour Analysis From 07:00 AM to 11:45 AM - Peak 1 of 1																	
Peak Hour for Entire Intersection Begins at 07:45 AM																	
07:45 AM	19	82	**1**	102	**17**	85	**83**	**185**	42	122	4	168	1	**28**	18	47	502
08:00 AM	33	95	0	128	14	71	63	148	21	109	**7**	137	0	20	18	38	451
08:15 AM	33	71	0	104	16	83	64	163	**44**	**141**	4	**189**	**4**	13	20	37	493
08:30 AM	**46**	**102**	0	**148**	3	**87**	62	152	39	131	4	174	0	28	**22**	**50**	**524**
Total Volume	131	350	1	482	50	326	272	648	146	503	19	668	5	89	78	172	1970
% App. Total	27.2	72.6	0.2		7.7	50.3	42		21.9	75.3	2.8		2.9	51.7	45.3		
PHF	.712	.858	.250	.814	.735	.937	.819	.876	.830	.892	.679	.884	.313	.795	.886	.860	.940

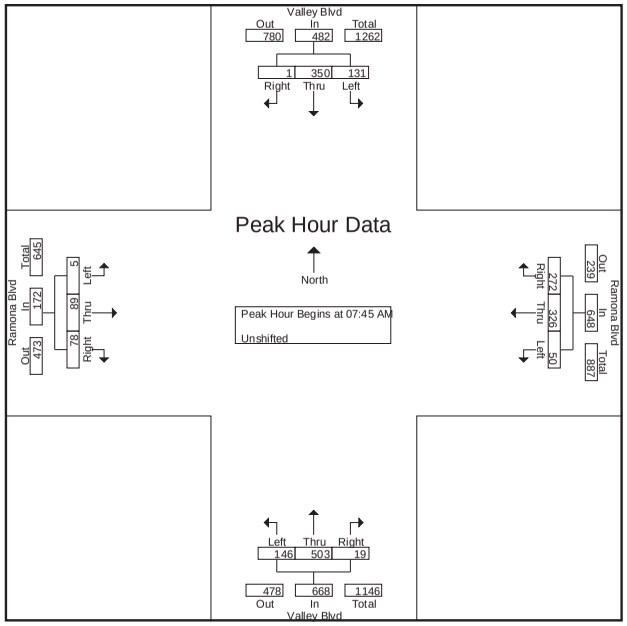

CITY TRAFFIC COUNTERS

626.991.7522

www.ctcounters.com

File Name : Valley_Ramona
Site Code : 00000000
Start Date : 7/8/2014
Page No : 3

	Valley Blvd Southbound				Ramona Blvd Westbound				Valley Blvd Northbound				Ramona Blvd Eastbound				
Start Time	Left	Thru	Right	App. Total	Left	Thru	Right	App. Total	Left	Thru	Right	App. Total	Left	Thru	Right	App. Total	Int. Total
Peak Hour Analysis From 12:00 PM to 05:45 PM - Peak 1 of 1																	
Peak Hour for Entire Intersection Begins at 04:45 PM																	
04:45 PM	80	132	**8**	220	5	42	42	89	29	117	**15**	161	4	69	37	110	580
05:00 PM	90	**159**	1	**250**	**13**	33	**54**	100	29	99	14	142	**5**	89	35	129	621
05:15 PM	**94**	148	3	245	8	36	41	85	25	128	13	166	1	82	21	104	600
05:30 PM	93	133	0	226	8	**50**	44	**102**	**35**	**138**	15	**188**	2	**121**	**42**	**165**	**681**
Total Volume	357	572	12	941	34	161	181	376	118	482	57	657	12	361	135	508	2482
% App. Total	37.9	60.8	1.3		9	42.8	48.1		18	73.4	8.7		2.4	71.1	26.6		
PHF	.949	.899	.375	.941	.654	.805	.838	.922	.843	.873	.950	.874	.600	.746	.804	.770	.911

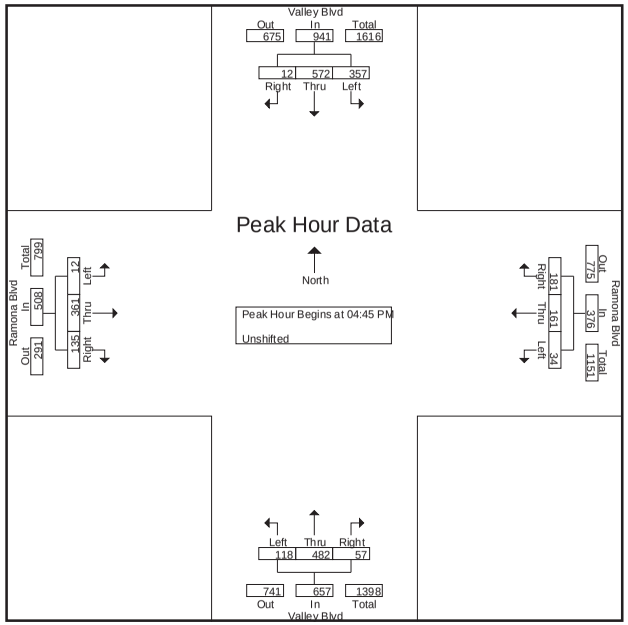

CITY TRAFFIC COUNTERS

626.991.7522

www.ctcounters.com

File Name : Mall_Ramona
Site Code : 00000000
Start Date : 7/8/2014
Page No : 1

Groups Printed- Bank 1

	Valley Mall Southbound			Ramona Blvd Westbound			Valley Blvd Northbound			Ramona Blvd Eastbound			
Start Time	Left	Thru	Right	Left	Thru	Right VM	Left	Thru VM	Right	Left VM	Thru	Right	Int. Total
07:00 AM	1	2	0	0	0	2	0	1	0	0	0	0	6
07:15 AM	1	4	0	0	0	2	0	4	0	0	0	0	11
07:30 AM	1	1	0	0	0	4	0	7	0	0	0	0	13
07:45 AM	1	5	1	0	0	0	0	2	0	0	0	0	9
Total	4	12	1	0	0	8	0	14	0	0	0	0	39
08:00 AM	7	8	1	0	0	1	0	3	0	0	0	0	20
08:15 AM	2	7	1	0	0	7	0	6	0	0	0	0	23
08:30 AM	3	6	0	0	0	2	0	7	0	0	0	0	18
08:45 AM	5	10	2	0	0	0	0	0	0	0	0	0	17
Total	17	31	4	0	0	10	0	16	0	0	0	0	78
04:00 PM	13	30	3	0	0	8	0	10	0	0	0	0	64
04:15 PM	16	24	0	0	0	7	0	26	0	1	0	0	74
04:30 PM	17	28	3	0	0	13	0	19	0	1	0	0	81
04:45 PM	23	25	1	0	0	17	0	33	0	1	0	0	100
Total	69	107	7	0	0	45	0	88	0	3	0	0	319
05:00 PM	14	26	4	0	0	6	0	19	0	3	0	0	72
05:15 PM	24	32	3	0	0	8	0	19	0	0	0	0	86
05:30 PM	12	22	3	0	0	12	0	17	0	1	0	0	67
05:45 PM	20	23	4	0	0	5	0	10	0	0	0	0	62
Total	70	103	14	0	0	31	0	65	0	4	0	0	287
Grand Total	160	253	26	0	0	94	0	183	0	7	0	0	723
Apprch %	36.4	57.6	5.9	0	0	100	0	100	0	100	0	0	
Total %	22.1	35	3.6	0	0	13	0	25.3	0	1	0	0	

CITY TRAFFIC COUNTERS

626.991.7522

www.ctcounters.com

File Name : Mall_Ramona
Site Code : 00000000
Start Date : 7/8/2014
Page No : 2

	Valley Mall Southbound				Ramona Blvd Westbound				Valley Blvd Northbound				Ramona Blvd Eastbound				
Start Time	Left	Thru	Right	App. Total	Left	Thru	Right VM	App. Total	Left	Thru VM	Right	App. Total	Left VM	Thru	Right	App. Total	Int. Total
Peak Hour Analysis From 07:00 AM to 11:45 AM - Peak 1 of 1																	
Peak Hour for Entire Intersection Begins at 08:00 AM																	
08:00 AM	**7**	8	1	16	0	0	1	1	0	3	0	3	0	0	0	0	20
08:15 AM	2	7	1	10	0	0	**7**	**7**	0	6	0	6	0	0	0	0	**23**
08:30 AM	3	6	0	9	0	0	2	2	0	**7**	0	**7**	0	0	0	0	18
08:45 AM	5	**10**	**2**	**17**	0	0	0	0	0	0	0	0	0	0	0	0	17
Total Volume	17	31	4	52	0	0	10	10	0	16	0	16	0	0	0	0	78
% App. Total	32.7	59.6	7.7		0	0	100		0	100	0		0	0	0		
PHF	.607	.775	.500	.765	.000	.000	.357	.357	.000	.571	.000	.571	.000	.000	.000	.000	.848

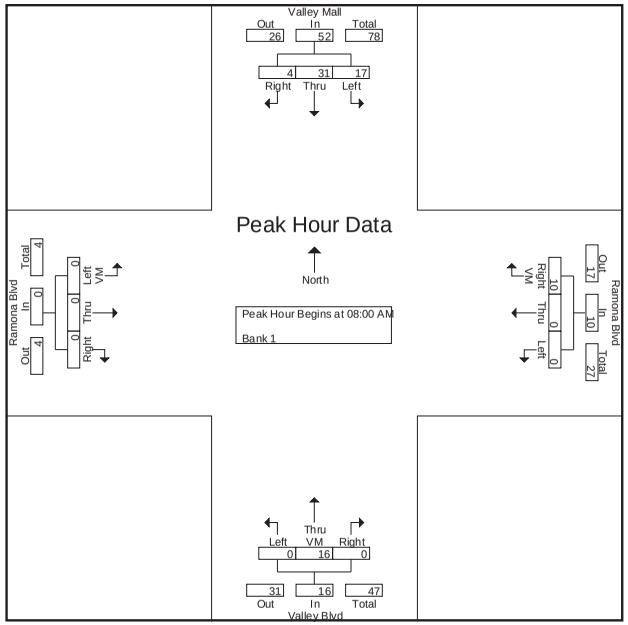

CITY TRAFFIC COUNTERS

626.991.7522

www.ctcounters.com

File Name : Mall_Ramona
Site Code : 00000000
Start Date : 7/8/2014
Page No : 3

	Valley Mall Southbound				Ramona Blvd Westbound				Valley Blvd Northbound				Ramona Blvd Eastbound				
Start Time	Left	Thru	Right	App. Total	Left	Thru	Right VM	App. Total	Left	Thru VM	Right	App. Total	Left VM	Thru	Right	App. Total	Int. Total
Peak Hour Analysis From 12:00 PM to 05:45 PM - Peak 1 of 1																	
Peak Hour for Entire Intersection Begins at 04:30 PM																	
04:30 PM	17	28	3	48	0	0	13	13	0	19	0	19	1	0	0	1	81
04:45 PM	23	25	1	49	0	0	**17**	**17**	0	**33**	0	**33**	1	0	0	1	**100**
05:00 PM	14	26	**4**	44	0	0	6	6	0	19	0	19	**3**	0	0	**3**	72
05:15 PM	**24**	**32**	3	**59**	0	0	8	8	0	19	0	19	0	0	0	0	86
Total Volume	78	111	11	200	0	0	44	44	0	90	0	90	5	0	0	5	339
% App. Total	39	55.5	5.5		0	0	100		0	100	0		100	0	0		
PHF	.813	.867	.688	.847	.000	.000	.647	.647	.000	.682	.000	.682	.417	.000	.000	.417	.848

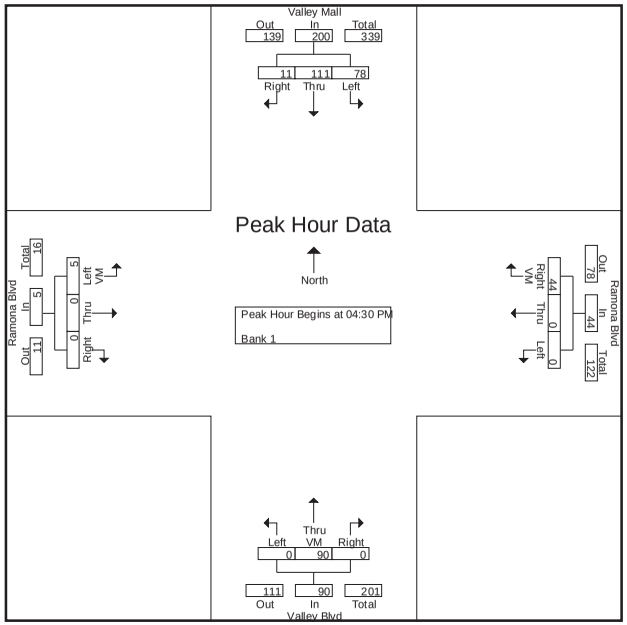

CITY TRAFFIC COUNTERS

626.991.7522

www.ctcounters.com

File Name : Sat_Valley_Ramona
Site Code : 00000000
Start Date : 7/12/2014
Page No : 1

Groups Printed- Unshifted

	Valley Blvd Southbound			Ramona Blvd Westbound			Valley Blvd Northbound			Ramona Blvd Eastbound			
Start Time	Left	Thru	Right	Left	Thru	Right	Left	Thru	Right	Left	Thru	Right	Int. Total
12:00 PM	87	149	3	9	32	45	40	111	5	2	45	19	547
12:15 PM	74	87	6	15	43	47	34	114	7	3	52	32	514
12:30 PM	80	112	1	7	60	52	35	121	9	0	52	11	540
12:45 PM	72	111	6	10	22	47	28	132	14	1	37	19	499
Total	313	459	16	41	157	191	137	478	35	6	186	81	2100
01:00 PM	84	101	1	14	33	46	27	85	7	4	42	26	470
01:15 PM	73	83	1	10	27	40	28	123	10	1	66	14	476
01:30 PM	63	58	2	7	36	30	31	118	4	2	31	15	397
01:45 PM	66	98	2	8	29	46	26	90	4	2	38	22	431
Total	286	340	6	39	125	162	112	416	25	9	177	77	1774
Grand Total	599	799	22	80	282	353	249	894	60	15	363	158	3874
Apprch %	42.2	56.3	1.5	11.2	39.4	49.4	20.7	74.3	5	2.8	67.7	29.5	
Total %	15.5	20.6	0.6	2.1	7.3	9.1	6.4	23.1	1.5	0.4	9.4	4.1	

CITY TRAFFIC COUNTERS

626.991.7522

www.ctcounters.com

File Name : Sat_Valley_Ramona
Site Code : 00000000
Start Date : 7/12/2014
Page No : 2

	Valley Blvd Southbound				Ramona Blvd Westbound				Valley Blvd Northbound				Ramona Blvd Eastbound				
Start Time	Left	Thru	Right	App. Total	Left	Thru	Right	App. Total	Left	Thru	Right	App. Total	Left	Thru	Right	App. Total	Int. Total
Peak Hour Analysis From 12:00 PM to 01:45 PM - Peak 1 of 1																	
Peak Hour for Entire Intersection Begins at 12:00 PM																	
12:00 PM	**87**	**149**	3	**239**	9	32	45	86	**40**	111	5	156	2	45	19	66	**547**
12:15 PM	74	87	**6**	167	**15**	43	47	105	34	114	7	155	**3**	**52**	**32**	**87**	514
12:30 PM	80	112	1	193	7	**60**	**52**	**119**	35	121	9	165	0	52	11	63	540
12:45 PM	72	111	6	189	10	22	47	79	28	**132**	**14**	**174**	1	37	19	57	499
Total Volume	313	459	16	788	41	157	191	389	137	478	35	650	6	186	81	273	2100
% App. Total	39.7	58.2	2		10.5	40.4	49.1		21.1	73.5	5.4		2.2	68.1	29.7		
PHF	.899	.770	.667	.824	.683	.654	.918	.817	.856	.905	.625	.934	.500	.894	.633	.784	.960

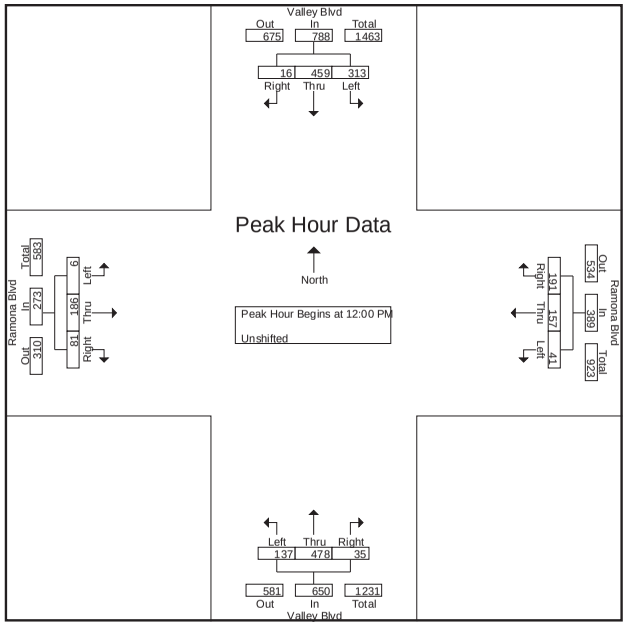

CITY TRAFFIC COUNTERS

626.991.7522

www.ctcounters.com

File Name : Sat_Valley_Ramona_Mall
Site Code : 00000000
Start Date : 7/12/2014
Page No : 1

Groups Printed- Bank 1

	Valley Mall Southbound			Ramona Blvd Westbound			Valley Blvd Northbound			Ramona Blvd Eastbound			
Start Time	Left	Thru	Right	Left	Thru	Right VM	Left	Thru VM	Right	Left	Thru	Right	Int. Total
12:00 PM	22	29	3	0	0	16	0	20	0	0	0	0	90
12:15 PM	29	39	2	0	0	24	0	28	0	4	0	0	126
12:30 PM	18	37	2	0	0	12	0	27	0	1	0	0	97
12:45 PM	18	27	3	0	0	25	0	28	0	0	0	0	101
Total	87	132	10	0	0	77	0	103	0	5	0	0	414
01:00 PM	21	27	2	0	0	20	0	28	0	1	0	0	99
01:15 PM	18	25	1	0	0	11	0	26	0	1	0	0	82
01:30 PM	29	25	1	0	0	7	0	27	0	0	0	0	89
01:45 PM	23	13	2	0	0	23	0	25	0	1	0	0	87
Total	91	90	6	0	0	61	0	106	0	3	0	0	357
Grand Total	178	222	16	0	0	138	0	209	0	8	0	0	771
Apprch %	42.8	53.4	3.8	0	0	100	0	100	0	100	0	0	
Total %	23.1	28.8	2.1	0	0	17.9	0	27.1	0	1	0	0	

CITY TRAFFIC COUNTERS

626.991.7522

www.ctcounters.com

File Name : Sat_Valley_Ramona_Mall
Site Code : 00000000
Start Date : 7/12/2014
Page No : 2

	Valley Mall Southbound				Ramona Blvd Westbound				Valley Blvd Northbound				Ramona Blvd Eastbound				
Start Time	Left	Thru	Right	App. Total	Left	Thru	Right VM	App. Total	Left	Thru VM	Right	App. Total	Left	Thru	Right	App. Total	Int. Total
Peak Hour Analysis From 12:00 PM to 01:45 PM - Peak 1 of 1																	
Peak Hour for Entire Intersection Begins at 12:15 PM																	
12:15 PM	**29**	**39**	2	**70**	0	0	24	24	0	**28**	0	**28**	**4**	0	0	**4**	**126**
12:30 PM	18	37	2	57	0	0	12	12	0	27	0	27	1	0	0	1	97
12:45 PM	18	27	**3**	48	0	0	**25**	**25**	0	28	0	28	0	0	0	0	101
01:00 PM	21	27	2	50	0	0	20	20	0	28	0	28	1	0	0	1	99
Total Volume	86	130	9	225	0	0	81	81	0	111	0	111	6	0	0	6	423
% App. Total	38.2	57.8	4		0	0	100		0	100	0		100	0	0		
PHF	.741	.833	.750	.804	.000	.000	.810	.810	.000	.991	.000	.991	.375	.000	.000	.375	.839

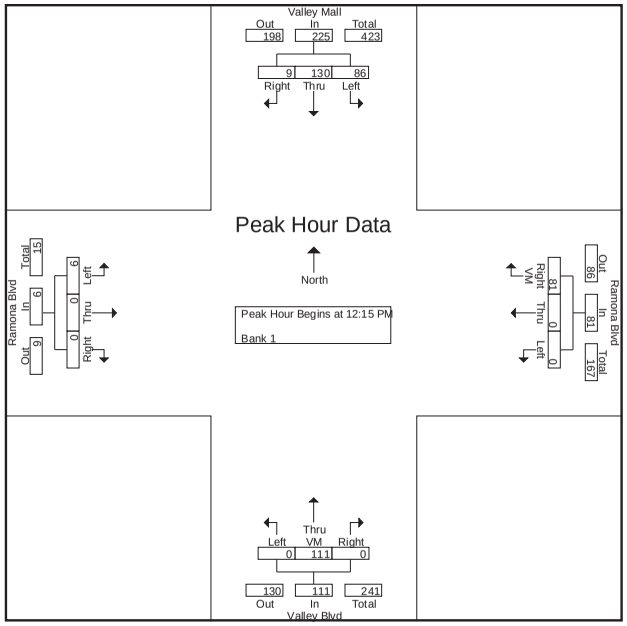

CITY TRAFFIC COUNTERS

626.991.7522

www.ctcounters.com

File Name : Peck_LAzusa
Site Code : 00000000
Start Date : 6/5/2014
Page No : 1

Groups Printed- Unshifted

	Peck Rd Southbound			Lower Azusa Rd Westbound			Peck Rd Northbound			Lower Azusa Rd Eastbound			
Start Time	Left	Thru	Right	Left	Thru	Right	Left	Thru	Right	Left	Thru	Right	Int. Total
07:00 AM	13	156	35	55	171	13	51	229	25	19	72	20	859
07:15 AM	27	185	40	67	191	16	55	238	21	25	83	24	972
07:30 AM	21	215	36	63	198	29	66	249	14	33	88	35	1047
07:45 AM	36	208	36	40	140	29	42	226	22	30	118	43	970
Total	97	764	147	225	700	87	214	942	82	107	361	122	3848
08:00 AM	22	165	37	45	109	19	44	229	21	33	102	39	865
08:15 AM	22	153	32	40	119	23	43	196	27	42	113	37	847
08:30 AM	17	145	27	35	109	21	49	203	27	34	102	32	801
08:45 AM	18	130	26	43	134	21	48	198	26	41	102	22	809
Total	79	593	122	163	471	84	184	826	101	150	419	130	3322
04:00 PM	34	125	18	39	115	17	47	142	27	52	194	38	848
04:15 PM	35	148	11	45	123	12	43	170	33	45	208	28	901
04:30 PM	36	143	36	37	126	14	51	161	48	45	189	32	918
04:45 PM	30	163	44	40	117	10	53	169	46	39	190	34	935
Total	135	579	109	161	481	53	194	642	154	181	781	132	3602
05:00 PM	29	173	31	50	114	18	56	209	70	38	184	33	1005
05:15 PM	27	184	34	39	143	19	48	189	67	43	235	35	1063
05:30 PM	32	165	37	44	132	18	50	209	52	46	183	42	1010
05:45 PM	25	131	36	36	153	25	52	215	40	48	220	39	1020
Total	113	653	138	169	542	80	206	822	229	175	822	149	4098
Grand Total	424	2589	516	718	2194	304	798	3232	566	613	2383	533	14870
Apprch %	12	73.4	14.6	22.3	68.2	9.5	17.4	70.3	12.3	17.4	67.5	15.1	
Total %	2.9	17.4	3.5	4.8	14.8	2	5.4	21.7	3.8	4.1	16	3.6	

CITY TRAFFIC COUNTERS

626.991.7522

www.ctcounters.com

File Name : Peck_LAzusa
Site Code : 00000000
Start Date : 6/5/2014
Page No : 2

	Peck Rd Southbound				Lower Azusa Rd Westbound				Peck Rd Northbound				Lower Azusa Rd Eastbound				
Start Time	Left	Thru	Right	App. Total	Left	Thru	Right	App. Total	Left	Thru	Right	App. Total	Left	Thru	Right	App. Total	Int. Total
Peak Hour Analysis From 07:00 AM to 11:45 AM - Peak 1 of 1																	
Peak Hour for Entire Intersection Begins at 07:15 AM																	
07:15 AM	27	185	**40**	252	**67**	191	16	274	55	238	21	314	25	83	24	132	972
07:30 AM	21	**215**	36	272	63	**198**	**29**	**290**	**66**	**249**	14	**329**	**33**	88	35	156	**1047**
07:45 AM	**36**	208	36	**280**	40	140	29	209	42	226	**22**	290	30	**118**	**43**	**191**	970
08:00 AM	22	165	37	224	45	109	19	173	44	229	21	294	33	102	39	174	865
Total Volume	106	773	149	1028	215	638	93	946	207	942	78	1227	121	391	141	653	3854
% App. Total	10.3	75.2	14.5		22.7	67.4	9.8		16.9	76.8	6.4		18.5	59.9	21.6		
PHF	.736	.899	.931	.918	.802	.806	.802	.816	.784	.946	.886	.932	.917	.828	.820	.855	.920

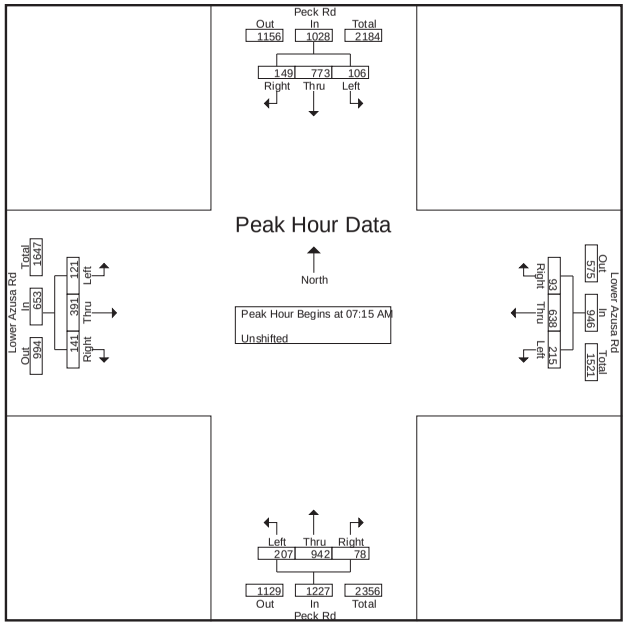

CITY TRAFFIC COUNTERS

626.991.7522

www.ctcounters.com

File Name : Peck_LAzusa
Site Code : 00000000
Start Date : 6/5/2014
Page No : 3

	Peck Rd Southbound				Lower Azusa Rd Westbound				Peck Rd Northbound				Lower Azusa Rd Eastbound				
Start Time	Left	Thru	Right	App. Total	Left	Thru	Right	App. Total	Left	Thru	Right	App. Total	Left	Thru	Right	App. Total	Int. Total
Peak Hour Analysis From 12:00 PM to 05:45 PM - Peak 1 of 1																	
Peak Hour for Entire Intersection Begins at 05:00 PM																	
05:00 PM	29	173	31	233	**50**	114	18	182	**56**	209	**70**	**335**	38	184	33	255	1005
05:15 PM	27	**184**	34	**245**	39	143	19	201	48	189	67	304	43	**235**	35	**313**	**1063**
05:30 PM	**32**	165	**37**	234	44	132	18	194	50	209	52	311	46	183	**42**	271	1010
05:45 PM	25	131	36	192	36	**153**	**25**	**214**	52	**215**	40	307	**48**	220	39	307	1020
Total Volume	113	653	138	904	169	542	80	791	206	822	229	1257	175	822	149	1146	4098
% App. Total	12.5	72.2	15.3		21.4	68.5	10.1		16.4	65.4	18.2		15.3	71.7	13		
PHF	.883	.887	.932	.922	.845	.886	.800	.924	.920	.956	.818	.938	.911	.874	.887	.915	.964

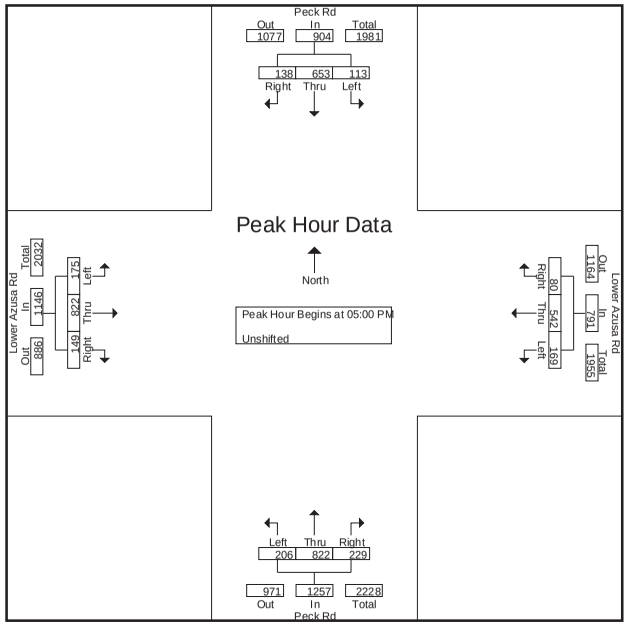

CITY TRAFFIC COUNTERS

626.991.7522

www.ctcounters.com

File Name : Peck_LAzusa_Sat
Site Code : 00000000
Start Date : 6/14/2014
Page No : 1

Groups Printed- Unshifted

	Peck Rd Southbound			Lower Azusa Rd Westbound			Peck Rd Northbound			Lower Azusa Rd Eastbound			
Start Time	Left	Thru	Right	Left	Thru	Right	Left	Thru	Right	Left	Thru	Right	Int. Total
12:00 PM	32	139	44	46	107	19	64	174	31	44	130	40	870
12:15 PM	30	127	34	55	131	18	61	156	22	46	124	44	848
12:30 PM	23	124	28	42	145	13	56	145	33	64	135	55	863
12:45 PM	27	147	28	37	130	24	65	155	38	46	118	50	865
Total	112	537	134	180	513	74	246	630	124	200	507	189	3446
01:00 PM	24	133	37	49	135	14	57	161	26	53	148	53	890
01:15 PM	23	126	34	31	103	13	55	141	26	53	147	50	802
01:30 PM	36	150	33	45	116	19	59	158	28	47	141	47	879
01:45 PM	26	122	30	45	105	19	67	137	28	55	134	44	812
Total	109	531	134	170	459	65	238	597	108	208	570	194	3383
Grand Total	221	1068	268	350	972	139	484	1227	232	408	1077	383	6829
Apprch %	14.2	68.6	17.2	24	66.5	9.5	24.9	63.1	11.9	21.8	57.7	20.5	
Total %	3.2	15.6	3.9	5.1	14.2	2	7.1	18	3.4	6	15.8	5.6	

CITY TRAFFIC COUNTERS
626.991.7522
www.ctcounters.com

File Name : Peck_LAzusa_Sat
Site Code : 00000000
Start Date : 6/14/2014
Page No : 2

	Peck Rd Southbound				Lower Azusa Rd Westbound				Peck Rd Northbound				Lower Azusa Rd Eastbound				
Start Time	Left	Thru	Right	App. Total	Left	Thru	Right	App. Total	Left	Thru	Right	App. Total	Left	Thru	Right	App. Total	Int. Total
Peak Hour Analysis From 12:00 PM to 01:45 PM - Peak 1 of 1																	
Peak Hour for Entire Intersection Begins at 12:15 PM																	
12:15 PM	**30**	127	34	191	**55**	131	18	**204**	61	156	22	239	46	124	44	214	848
12:30 PM	23	124	28	175	42	**145**	13	200	56	145	33	234	**64**	135	**55**	**254**	863
12:45 PM	27	**147**	28	**202**	37	130	**24**	191	**65**	155	**38**	**258**	46	118	50	214	865
01:00 PM	24	133	**37**	194	49	135	14	198	57	**161**	26	244	53	**148**	53	254	**890**
Total Volume	104	531	127	762	183	541	69	793	239	617	119	975	209	525	202	936	3466
% App. Total	13.6	69.7	16.7		23.1	68.2	8.7		24.5	63.3	12.2		22.3	56.1	21.6		
PHF	.867	.903	.858	.943	.832	.933	.719	.972	.919	.958	.783	.945	.816	.887	.918	.921	.974

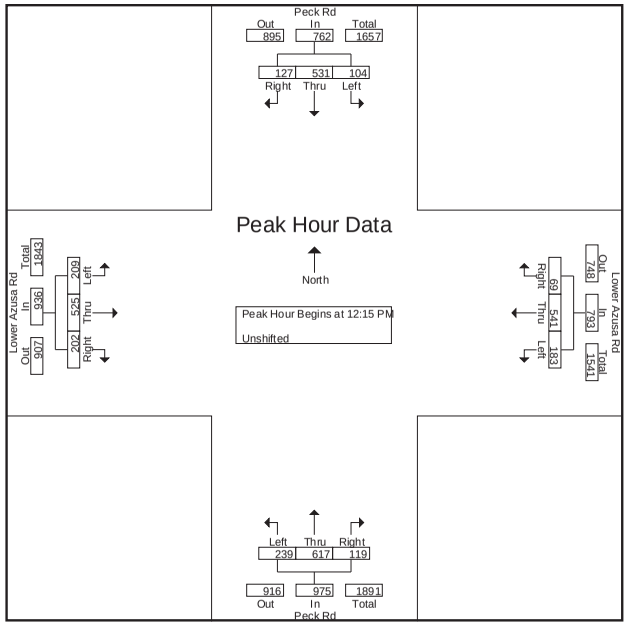

CITY TRAFFIC COUNTERS
626.991.7522
www.ctcounters.com

File Name : Peck_Ramona
Site Code : 00000000
Start Date : 6/4/2014
Page No : 1

Groups Printed- Unshifted

	Peck Rd Southbound			Ramona Blvd Westbound			Peck Rd Northbound			Ramona Blvd Eastbound			
Start Time	Left	Thru	Right	Left	Thru	Right	Left	Thru	Right	Left	Thru	Right	Int. Total
07:00 AM	26	196	19	43	114	34	7	99	27	8	40	2	615
07:15 AM	20	255	41	56	126	40	5	129	24	10	29	3	738
07:30 AM	25	260	34	51	184	36	14	179	29	15	49	10	886
07:45 AM	36	275	43	69	135	56	10	156	43	40	56	5	924
Total	107	986	137	219	559	166	36	563	123	73	174	20	3163
08:00 AM	41	267	41	54	121	33	10	126	35	23	72	7	830
08:15 AM	39	230	37	50	134	44	5	149	36	23	47	4	798
08:30 AM	22	239	29	68	88	33	6	162	30	21	34	8	740
08:45 AM	27	218	37	61	95	31	8	140	25	24	57	4	727
Total	129	954	144	233	438	141	29	577	126	91	210	23	3095
04:00 PM	61	238	16	43	69	42	12	305	76	76	140	5	1083
04:15 PM	52	182	22	58	78	47	8	277	68	92	177	7	1068
04:30 PM	48	218	23	53	89	36	14	261	74	86	125	10	1037
04:45 PM	61	234	14	45	112	40	22	234	67	58	156	7	1050
Total	222	872	75	199	348	165	56	1077	285	312	598	29	4238
05:00 PM	61	237	35	57	84	45	17	320	60	53	170	13	1152
05:15 PM	72	200	16	46	74	44	19	308	51	76	142	8	1056
05:30 PM	76	251	13	46	84	37	20	334	66	84	160	8	1179
05:45 PM	56	221	10	48	75	37	20	264	81	69	154	4	1039
Total	265	909	74	197	317	163	76	1226	258	282	626	33	4426
Grand Total	723	3721	430	848	1662	635	197	3443	792	758	1608	105	14922
Apprch %	14.8	76.3	8.8	27	52.8	20.2	4.4	77.7	17.9	30.7	65.1	4.2	
Total %	4.8	24.9	2.9	5.7	11.1	4.3	1.3	23.1	5.3	5.1	10.8	0.7	

CITY TRAFFIC COUNTERS

626.991.7522

www.ctcounters.com

File Name : Peck_Ramona
Site Code : 00000000
Start Date : 6/4/2014
Page No : 2

	Peck Rd Southbound				Ramona Blvd Westbound				Peck Rd Northbound				Ramona Blvd Eastbound				
Start Time	Left	Thru	Right	App. Total	Left	Thru	Right	App. Total	Left	Thru	Right	App. Total	Left	Thru	Right	App. Total	Int. Total
Peak Hour Analysis From 07:00 AM to 11:45 AM - Peak 1 of 1																	
Peak Hour for Entire Intersection Begins at 07:30 AM																	
07:30 AM	25	260	34	319	51	**184**	36	**271**	**14**	**179**	29	**222**	15	49	**10**	74	886
07:45 AM	36	**275**	**43**	**354**	**69**	135	**56**	260	10	156	**43**	209	**40**	56	5	101	**924**
08:00 AM	**41**	267	41	349	54	121	33	208	10	126	35	171	23	**72**	7	**102**	830
08:15 AM	39	230	37	306	50	134	44	228	5	149	36	190	23	47	4	74	798
Total Volume	141	1032	155	1328	224	574	169	967	39	610	143	792	101	224	26	351	3438
% App. Total	10.6	77.7	11.7		23.2	59.4	17.5		4.9	77	18.1		28.8	63.8	7.4		
PHF	.860	.938	.901	.938	.812	.780	.754	.892	.696	.852	.831	.892	.631	.778	.650	.860	.930

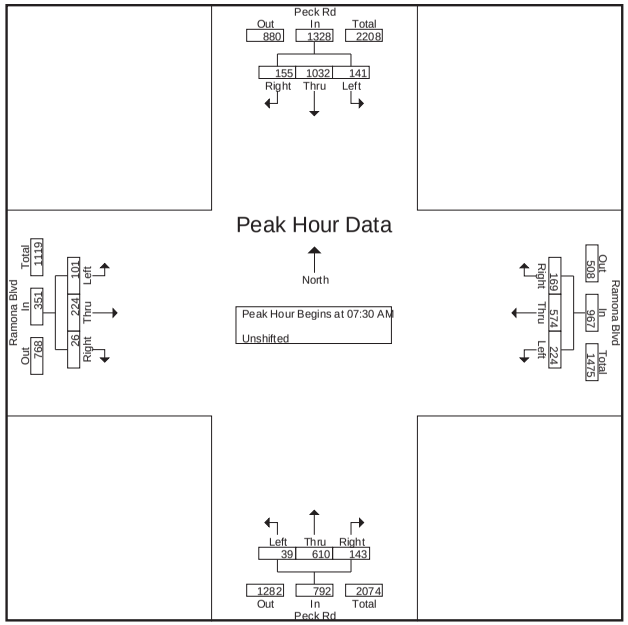

CITY TRAFFIC COUNTERS

626.991.7522

www.ctcounters.com

File Name : Peck_Ramona
Site Code : 00000000
Start Date : 6/4/2014
Page No : 3

	Peck Rd Southbound				Ramona Blvd Westbound				Peck Rd Northbound				Ramona Blvd Eastbound				
Start Time	Left	Thru	Right	App. Total	Left	Thru	Right	App. Total	Left	Thru	Right	App. Total	Left	Thru	Right	App. Total	Int. Total
Peak Hour Analysis From 12:00 PM to 05:45 PM - Peak 1 of 1																	
Peak Hour for Entire Intersection Begins at 04:45 PM																	
04:45 PM	61	234	14	309	45	**112**	40	**197**	**22**	234	**67**	323	58	156	7	221	1050
05:00 PM	61	237	**35**	333	**57**	84	**45**	186	17	320	60	397	53	**170**	**13**	236	1152
05:15 PM	72	200	16	288	46	74	44	164	19	308	51	378	76	142	8	226	1056
05:30 PM	**76**	**251**	13	**340**	46	84	37	167	20	**334**	66	**420**	**84**	160	8	**252**	**1179**
Total Volume	270	922	78	1270	194	354	166	714	78	1196	244	1518	271	628	36	935	4437
% App. Total	21.3	72.6	6.1		27.2	49.6	23.2		5.1	78.8	16.1		29	67.2	3.9		
PHF	.888	.918	.557	.934	.851	.790	.922	.906	.886	.895	.910	.904	.807	.924	.692	.928	.941

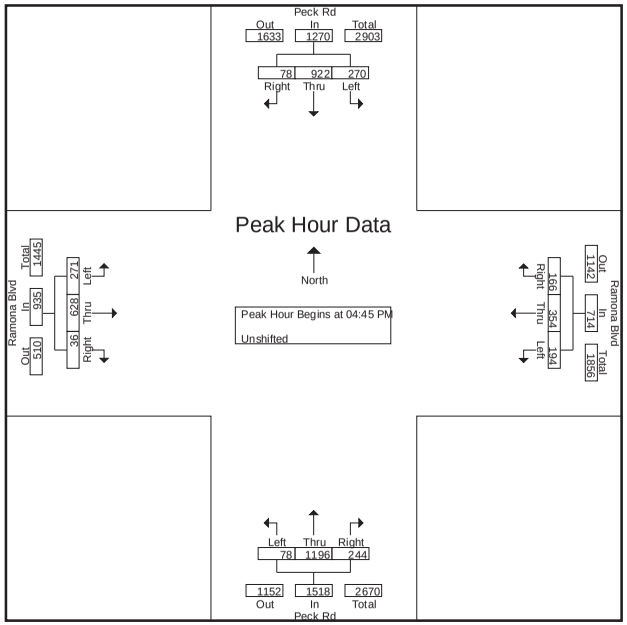

CITY TRAFFIC COUNTERS

626.991.7522

www.ctcounters.com

File Name : Peck_Ramona_Sat
Site Code : 00000000
Start Date : 6/14/2014
Page No : 1

Groups Printed- Unshifted

	Peck Rd Southbound			Ramona Blvd Westbound			Peck Rd Northbound			Ramona Blvd Eastbound			
Start Time	Left	Thru	Right	Left	Thru	Right	Left	Thru	Right	Left	Thru	Right	Int. Total
12:00 PM	35	214	21	51	99	31	16	188	57	37	108	6	863
12:15 PM	29	206	29	64	67	37	19	210	64	49	82	14	870
12:30 PM	50	227	20	56	86	29	27	200	63	38	83	10	889
12:45 PM	36	221	18	53	55	39	20	209	66	35	85	3	840
Total	150	868	88	224	307	136	82	807	250	159	358	33	3462
01:00 PM	38	217	18	63	73	29	15	194	63	28	103	3	844
01:15 PM	24	233	23	52	99	40	13	169	66	42	99	12	872
01:30 PM	44	225	33	57	74	25	15	180	61	39	99	5	857
01:45 PM	33	224	18	59	79	29	17	194	52	33	93	5	836
Total	139	899	92	231	325	123	60	737	242	142	394	25	3409
Grand Total	289	1767	180	455	632	259	142	1544	492	301	752	58	6871
Apprch %	12.9	79	8.1	33.8	47	19.2	6.5	70.9	22.6	27.1	67.7	5.2	
Total %	4.2	25.7	2.6	6.6	9.2	3.8	2.1	22.5	7.2	4.4	10.9	0.8	

CITY TRAFFIC COUNTERS

626.991.7522

www.ctcounters.com

File Name : Peck_Ramona_Sat
Site Code : 00000000
Start Date : 6/14/2014
Page No : 2

	Peck Rd Southbound				Ramona Blvd Westbound				Peck Rd Northbound				Ramona Blvd Eastbound				
Start Time	Left	Thru	Right	App. Total	Left	Thru	Right	App. Total	Left	Thru	Right	App. Total	Left	Thru	Right	App. Total	Int. Total
Peak Hour Analysis From 12:00 PM to 01:45 PM - Peak 1 of 1																	
Peak Hour for Entire Intersection Begins at 12:00 PM																	
12:00 PM	35	214	21	270	51	**99**	31	**181**	16	188	57	261	37	**108**	6	**151**	863
12:15 PM	29	206	**29**	264	**64**	67	37	168	19	**210**	64	293	**49**	82	**14**	145	870
12:30 PM	**50**	**227**	20	**297**	56	86	29	171	**27**	200	63	290	38	83	10	131	**889**
12:45 PM	36	221	18	275	53	55	**39**	147	20	209	**66**	**295**	35	85	3	123	840
Total Volume	150	868	88	1106	224	307	136	667	82	807	250	1139	159	358	33	550	3462
% App. Total	13.6	78.5	8		33.6	46	20.4		7.2	70.9	21.9		28.9	65.1	6		
PHF	.750	.956	.759	.931	.875	.775	.872	.921	.759	.961	.947	.965	.811	.829	.589	.911	.974

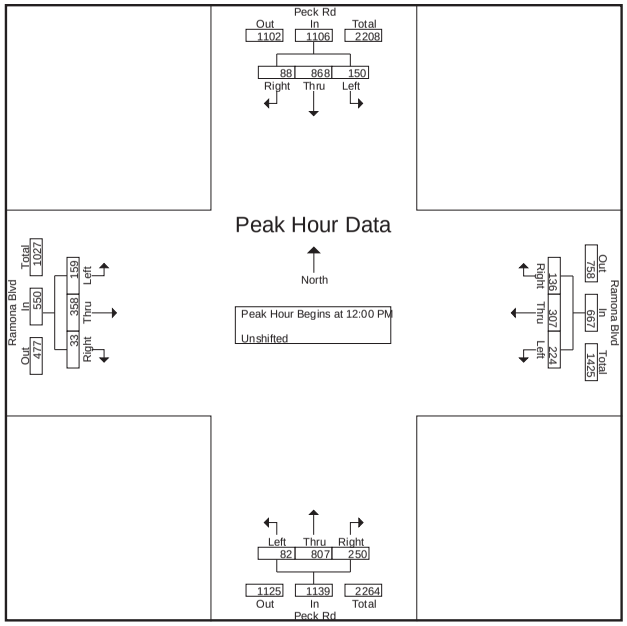

CITY TRAFFIC COUNTERS

626.991.7522

www.ctcounters.com

File Name : Peck_Valley
Site Code : 00000000
Start Date : 6/5/2014
Page No : 1

Groups Printed- Unshifted

	Peck Rd Southbound			Valley Blvd Westbound			Peck Rd Northbound			Valley Blvd Eastbound			
Start Time	Left	Thru	Right	Left	Thru	Right	Left	Thru	Right	Left	Thru	Right	Int. Total
07:00 AM	47	221	29	6	104	23	54	70	40	13	68	9	684
07:15 AM	63	245	55	15	104	38	55	123	65	17	69	11	860
07:30 AM	61	278	48	20	143	40	58	186	63	26	78	13	1014
07:45 AM	109	297	57	21	141	49	99	191	76	30	73	30	1173
Total	280	1041	189	62	492	150	266	570	244	86	288	63	3731
08:00 AM	82	248	52	22	86	37	98	189	94	21	62	21	1012
08:15 AM	80	255	40	23	82	36	98	160	81	30	71	20	976
08:30 AM	75	250	33	20	43	29	77	140	58	36	85	31	877
08:45 AM	93	213	36	38	52	31	103	121	55	37	105	10	894
Total	330	966	161	103	263	133	376	610	288	124	323	82	3759
04:00 PM	78	197	30	26	128	64	74	221	79	38	188	22	1145
04:15 PM	89	186	22	17	111	56	76	233	65	42	189	32	1118
04:30 PM	92	219	17	25	80	44	97	292	76	48	195	35	1220
04:45 PM	98	242	23	24	95	53	96	278	82	53	194	33	1271
Total	357	844	92	92	414	217	343	1024	302	181	766	122	4754
05:00 PM	76	220	24	30	87	43	64	260	75	50	181	25	1135
05:15 PM	75	256	30	21	79	51	77	287	61	59	220	30	1246
05:30 PM	91	280	27	22	119	53	85	266	92	84	218	47	1384
05:45 PM	122	305	28	27	95	46	96	259	75	92	209	37	1391
Total	364	1061	109	100	380	193	322	1072	303	285	828	139	5156
Grand Total	1331	3912	551	357	1549	693	1307	3276	1137	676	2205	406	17400
Apprch %	23	67.5	9.5	13.7	59.6	26.7	22.8	57.3	19.9	20.6	67.1	12.4	
Total %	7.6	22.5	3.2	2.1	8.9	4	7.5	18.8	6.5	3.9	12.7	2.3	

CITY TRAFFIC COUNTERS

626.991.7522

www.ctcounters.com

File Name : Peck_Valley
Site Code : 00000000
Start Date : 6/5/2014
Page No : 2

	Peck Rd Southbound				Valley Blvd Westbound				Peck Rd Northbound				Valley Blvd Eastbound				
Start Time	Left	Thru	Right	App. Total	Left	Thru	Right	App. Total	Left	Thru	Right	App. Total	Left	Thru	Right	App. Total	Int. Total
Peak Hour Analysis From 07:00 AM to 11:45 AM - Peak 1 of 1																	
Peak Hour for Entire Intersection Begins at 07:30 AM																	
07:30 AM	61	278	48	387	20	**143**	40	203	58	186	63	307	26	**78**	13	117	1014
07:45 AM	**109**	**297**	**57**	**463**	21	141	**49**	**211**	**99**	**191**	76	366	**30**	73	**30**	**133**	**1173**
08:00 AM	82	248	52	382	22	86	37	145	98	189	**94**	**381**	21	62	21	104	1012
08:15 AM	80	255	40	375	**23**	82	36	141	98	160	81	339	30	71	20	121	976
Total Volume	332	1078	197	1607	86	452	162	700	353	726	314	1393	107	284	84	475	4175
% App. Total	20.7	67.1	12.3		12.3	64.6	23.1		25.3	52.1	22.5		22.5	59.8	17.7		
PHF	.761	.907	.864	.868	.935	.790	.827	.829	.891	.950	.835	.914	.892	.910	.700	.893	.890

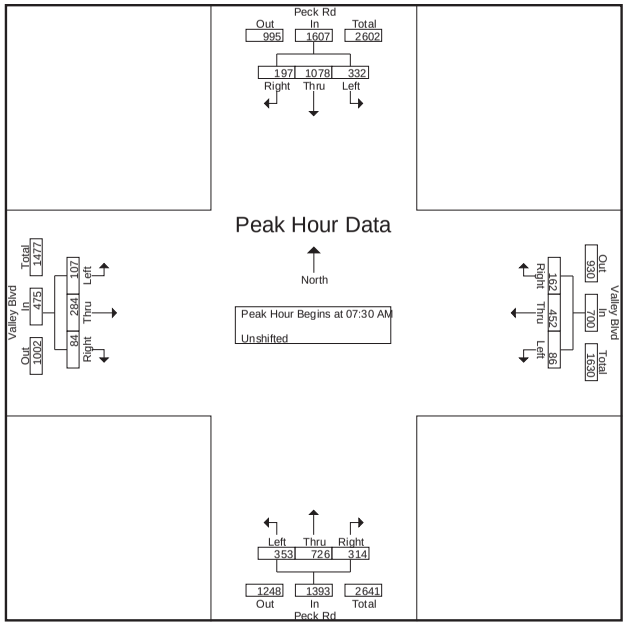

CITY TRAFFIC COUNTERS

626.991.7522

www.ctcounters.com

File Name : Peck_Valley
Site Code : 00000000
Start Date : 6/5/2014
Page No : 3

	Peck Rd Southbound				Valley Blvd Westbound				Peck Rd Northbound				Valley Blvd Eastbound				
Start Time	Left	Thru	Right	App. Total	Left	Thru	Right	App. Total	Left	Thru	Right	App. Total	Left	Thru	Right	App. Total	Int. Total
Peak Hour Analysis From 12:00 PM to 05:45 PM - Peak 1 of 1																	
Peak Hour for Entire Intersection Begins at 05:00 PM																	
05:00 PM	76	220	24	320	**30**	87	43	160	64	260	75	399	50	181	25	256	1135
05:15 PM	75	256	**30**	361	21	79	51	151	77	**287**	61	425	59	**220**	30	309	1246
05:30 PM	91	280	27	398	22	**119**	**53**	**194**	85	266	**92**	**443**	84	218	**47**	**349**	1384
05:45 PM	**122**	**305**	28	**455**	27	95	46	168	**96**	259	75	430	**92**	209	37	338	**1391**
Total Volume	364	1061	109	1534	100	380	193	673	322	1072	303	1697	285	828	139	1252	5156
% App. Total	23.7	69.2	7.1		14.9	56.5	28.7		19	63.2	17.9		22.8	66.1	11.1		
PHF	.746	.870	.908	.843	.833	.798	.910	.867	.839	.934	.823	.958	.774	.941	.739	.897	.927

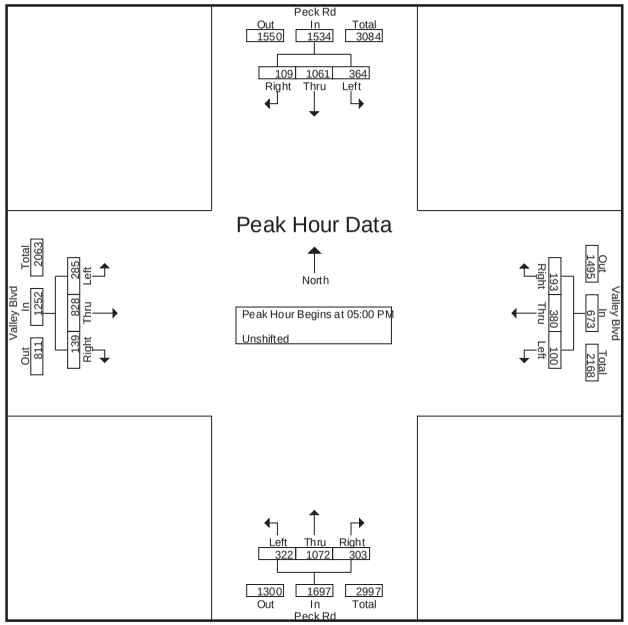

CITY TRAFFIC COUNTERS

626.991.7522

www.ctcounters.com

File Name : Peck_Valley_Sat
Site Code : 00000000
Start Date : 6/14/2014
Page No : 1

Groups Printed- Unshifted

	Peck Rd Southbound			Valley Blvd Westbound			Peck Rd Northbound			Valley Blvd Eastbound			
Start Time	Left	Thru	Right	Left	Thru	Right	Left	Thru	Right	Left	Thru	Right	Int. Total
12:00 PM	60	211	37	15	158	58	35	226	87	19	153	42	1101
12:15 PM	66	202	46	16	128	51	28	237	74	27	146	29	1050
12:30 PM	66	209	41	18	122	57	26	223	76	27	152	33	1050
12:45 PM	62	218	48	27	128	58	26	229	67	47	143	26	1079
Total	254	840	172	76	536	224	115	915	304	120	594	130	4280
01:00 PM	76	202	41	12	131	58	33	204	90	28	145	24	1044
01:15 PM	76	204	42	17	142	59	21	174	90	36	161	39	1061
01:30 PM	73	201	32	13	121	62	30	188	82	42	154	33	1031
01:45 PM	69	213	32	12	121	54	33	177	97	27	145	24	1004
Total	294	820	147	54	515	233	117	743	359	133	605	120	4140
Grand Total	548	1660	319	130	1051	457	232	1658	663	253	1199	250	8420
Apprch %	21.7	65.7	12.6	7.9	64.2	27.9	9.1	64.9	26	14.9	70.4	14.7	
Total %	6.5	19.7	3.8	1.5	12.5	5.4	2.8	19.7	7.9	3	14.2	3	

CITY TRAFFIC COUNTERS

626.991.7522

www.ctcounters.com

File Name : Peck_Valley_Sat
Site Code : 00000000
Start Date : 6/14/2014
Page No : 2

	Peck Rd Southbound				Valley Blvd Westbound				Peck Rd Northbound				Valley Blvd Eastbound				
Start Time	Left	Thru	Right	App. Total	Left	Thru	Right	App. Total	Left	Thru	Right	App. Total	Left	Thru	Right	App. Total	Int. Total
Peak Hour Analysis From 12:00 PM to 01:45 PM - Peak 1 of 1																	
Peak Hour for Entire Intersection Begins at 12:00 PM																	
12:00 PM	60	211	37	308	15	**158**	**58**	**231**	**35**	226	**87**	**348**	19	**153**	**42**	214	**1101**
12:15 PM	**66**	202	46	314	16	128	51	195	28	**237**	74	339	27	146	29	202	1050
12:30 PM	66	209	41	316	18	122	57	197	26	223	76	325	27	152	33	212	1050
12:45 PM	62	**218**	**48**	**328**	**27**	128	58	213	26	229	67	322	**47**	143	26	**216**	1079
Total Volume	254	840	172	1266	76	536	224	836	115	915	304	1334	120	594	130	844	4280
% App. Total	20.1	66.4	13.6		9.1	64.1	26.8		8.6	68.6	22.8		14.2	70.4	15.4		
PHF	.962	.963	.896	.965	.704	.848	.966	.905	.821	.965	.874	.958	.638	.971	.774	.977	.972

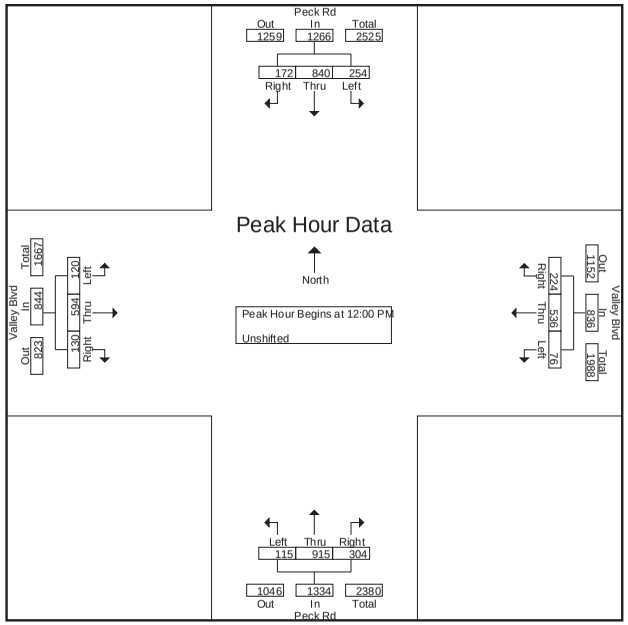

CITY TRAFFIC COUNTERS

626.991.7522

www.ctcounters.com

File Name : Peck_Garvey
Site Code : 00000000
Start Date : 6/5/2014
Page No : 1

Groups Printed- Unshifted

	Peck Rd Southbound			Garvey Ave Westbound			Peck Rd Northbound			Garvey Ave Eastbound			
Start Time	Left	Thru	Right	Left	Thru	Right	Left	Thru	Right	Left	Thru	Right	Int. Total
07:00 AM	9	109	54	2	115	9	26	108	8	22	69	16	547
07:15 AM	6	139	55	18	129	5	28	127	9	28	84	18	646
07:30 AM	9	140	63	19	170	20	35	178	10	33	96	19	792
07:45 AM	23	150	105	20	193	15	22	182	18	51	107	30	916
Total	47	538	277	59	607	49	111	595	45	134	356	83	2901
08:00 AM	10	132	82	12	144	6	28	114	10	30	102	15	685
08:15 AM	3	135	82	5	124	8	21	119	9	29	94	20	649
08:30 AM	9	109	62	13	137	2	32	104	6	26	91	19	610
08:45 AM	9	106	90	5	107	14	21	100	8	30	95	14	599
Total	31	482	316	35	512	30	102	437	33	115	382	68	2543
04:00 PM	9	100	51	20	80	13	36	119	13	42	164	12	659
04:15 PM	16	135	56	24	97	7	29	142	18	52	180	9	765
04:30 PM	25	141	55	25	112	11	31	132	11	62	236	18	859
04:45 PM	41	129	60	21	155	13	38	129	15	108	232	10	951
Total	91	505	222	90	444	44	134	522	57	264	812	49	3234
05:00 PM	22	153	56	23	134	3	31	135	13	114	224	19	927
05:15 PM	23	178	52	21	115	5	17	143	21	106	217	15	913
05:30 PM	22	238	44	23	87	14	23	159	11	91	202	14	928
05:45 PM	24	165	56	24	110	16	32	139	17	71	147	10	811
Total	91	734	208	91	446	38	103	576	62	382	790	58	3579
Grand Total	260	2259	1023	275	2009	161	450	2130	197	895	2340	258	12257
Apprch %	7.3	63.8	28.9	11.2	82.2	6.6	16.2	76.7	7.1	25.6	67	7.4	
Total %	2.1	18.4	8.3	2.2	16.4	1.3	3.7	17.4	1.6	7.3	19.1	2.1	

CITY TRAFFIC COUNTERS
626.991.7522
www.ctcounters.com

File Name : Peck_Garvey
Site Code : 00000000
Start Date : 6/5/2014
Page No : 2

	Peck Rd Southbound				Garvey Ave Westbound				Peck Rd Northbound				Garvey Ave Eastbound				
Start Time	Left	Thru	Right	App. Total	Left	Thru	Right	App. Total	Left	Thru	Right	App. Total	Left	Thru	Right	App. Total	Int. Total
Peak Hour Analysis From 07:00 AM to 11:45 AM - Peak 1 of 1																	
Peak Hour for Entire Intersection Begins at 07:30 AM																	
07:30 AM	9	140	63	212	19	170	**20**	209	**35**	178	10	**223**	33	96	19	148	792
07:45 AM	**23**	**150**	**105**	**278**	**20**	**193**	15	**228**	22	**182**	**18**	222	**51**	**107**	**30**	**188**	**916**
08:00 AM	10	132	82	224	12	144	6	162	28	114	10	152	30	102	15	147	685
08:15 AM	3	135	82	220	5	124	8	137	21	119	9	149	29	94	20	143	649
Total Volume	45	557	332	934	56	631	49	736	106	593	47	746	143	399	84	626	3042
% App. Total	4.8	59.6	35.5		7.6	85.7	6.7		14.2	79.5	6.3		22.8	63.7	13.4		
PHF	.489	.928	.790	.840	.700	.817	.613	.807	.757	.815	.653	.836	.701	.932	.700	.832	.830

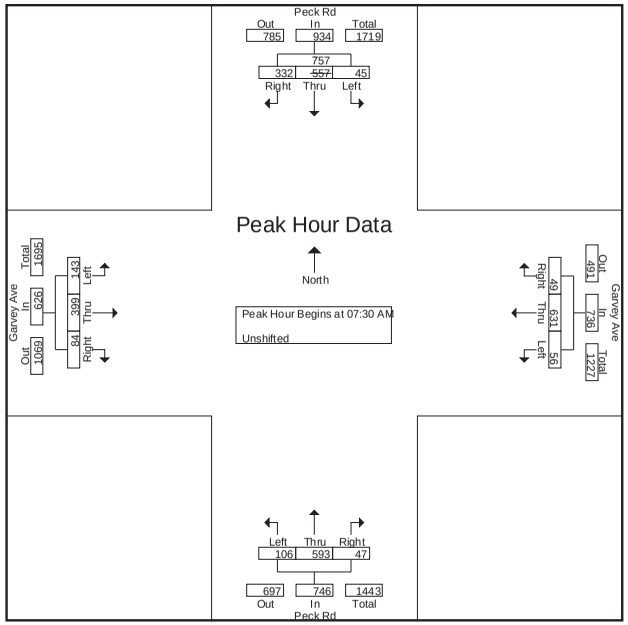

CITY TRAFFIC COUNTERS
626.991.7522
www.ctcounters.com

File Name : Peck_Garvey
Site Code : 00000000
Start Date : 6/5/2014
Page No : 3

	Peck Rd Southbound				Garvey Ave Westbound				Peck Rd Northbound				Garvey Ave Eastbound				
Start Time	Left	Thru	Right	App. Total	Left	Thru	Right	App. Total	Left	Thru	Right	App. Total	Left	Thru	Right	App. Total	Int. Total
Peak Hour Analysis From 12:00 PM to 05:45 PM - Peak 1 of 1																	
Peak Hour for Entire Intersection Begins at 04:45 PM																	
04:45 PM	**41**	129	**60**	230	21	**155**	13	**189**	**38**	129	15	182	108	**232**	10	350	**951**
05:00 PM	22	153	56	231	**23**	134	3	160	31	135	13	179	**114**	224	**19**	**357**	927
05:15 PM	23	178	52	253	21	115	5	141	17	143	**21**	181	106	217	15	338	913
05:30 PM	22	**238**	44	**304**	23	87	**14**	124	23	**159**	11	**193**	91	202	14	307	928
Total Volume	108	698	212	1018	88	491	35	614	109	566	60	735	419	875	58	1352	3719
% App. Total	10.6	68.6	20.8		14.3	80	5.7		14.8	77	8.2		31	64.7	4.3		
PHF	.659	.733	.883	.837	.957	.792	.625	.812	.717	.890	.714	.952	.919	.943	.763	.947	.978

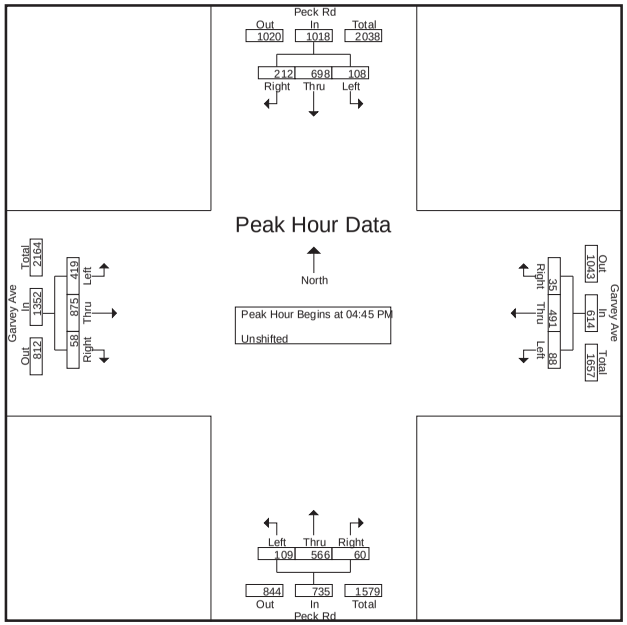

CITY TRAFFIC COUNTERS

626.991.7522

www.ctcounters.com

File Name : Peck_Garvey_Sat
Site Code : 00000000
Start Date : 6/14/2014
Page No : 1

Groups Printed- Unshifted

	Peck Rd Southbound			Garvey Ave Westbound			Peck Rd Northbound			Garvey Ave Eastbound			
Start Time	Left	Thru	Right	Left	Thru	Right	Left	Thru	Right	Left	Thru	Right	Int. Total
12:00 PM	14	163	58	13	130	13	40	131	16	45	164	18	805
12:15 PM	15	147	64	20	146	9	25	109	12	63	141	20	771
12:30 PM	19	140	61	8	152	11	33	134	14	80	157	19	828
12:45 PM	20	138	61	14	130	7	25	115	10	60	143	28	751
Total	68	588	244	55	558	40	123	489	52	248	605	85	3155
01:00 PM	17	142	51	15	133	14	32	138	15	63	160	27	807
01:15 PM	13	157	53	13	117	4	27	113	17	71	145	29	759
01:30 PM	10	136	49	12	128	3	35	97	7	69	148	35	729
01:45 PM	17	104	61	18	121	14	50	124	14	71	167	24	785
Total	57	539	214	58	499	35	144	472	53	274	620	115	3080
Grand Total	125	1127	458	113	1057	75	267	961	105	522	1225	200	6235
Apprch %	7.3	65.9	26.8	9.1	84.9	6	20	72.1	7.9	26.8	62.9	10.3	
Total %	2	18.1	7.3	1.8	17	1.2	4.3	15.4	1.7	8.4	19.6	3.2	

CITY TRAFFIC COUNTERS

626.991.7522

www.ctcounters.com

File Name : Peck_Garvey_Sat
Site Code : 00000000
Start Date : 6/14/2014
Page No : 2

	Peck Rd Southbound				Garvey Ave Westbound				Peck Rd Northbound				Garvey Ave Eastbound				
Start Time	Left	Thru	Right	App. Total	Left	Thru	Right	App. Total	Left	Thru	Right	App. Total	Left	Thru	Right	App. Total	Int. Total
Peak Hour Analysis From 12:00 PM to 01:45 PM - Peak 1 of 1																	
Peak Hour for Entire Intersection Begins at 12:15 PM																	
12:15 PM	15	**147**	**64**	**226**	**20**	146	9	**175**	25	109	12	146	63	141	20	224	771
12:30 PM	19	140	61	220	8	**152**	11	171	**33**	134	14	181	**80**	157	19	**256**	**828**
12:45 PM	**20**	138	61	219	14	130	7	151	25	115	10	150	60	143	**28**	231	751
01:00 PM	17	142	51	210	15	133	**14**	162	32	**138**	**15**	**185**	63	**160**	27	250	807
Total Volume	71	567	237	875	57	561	41	659	115	496	51	662	266	601	94	961	3157
% App. Total	8.1	64.8	27.1		8.6	85.1	6.2		17.4	74.9	7.7		27.7	62.5	9.8		
PHF	.888	.964	.926	.968	.713	.923	.732	.941	.871	.899	.850	.895	.831	.939	.839	.938	.953

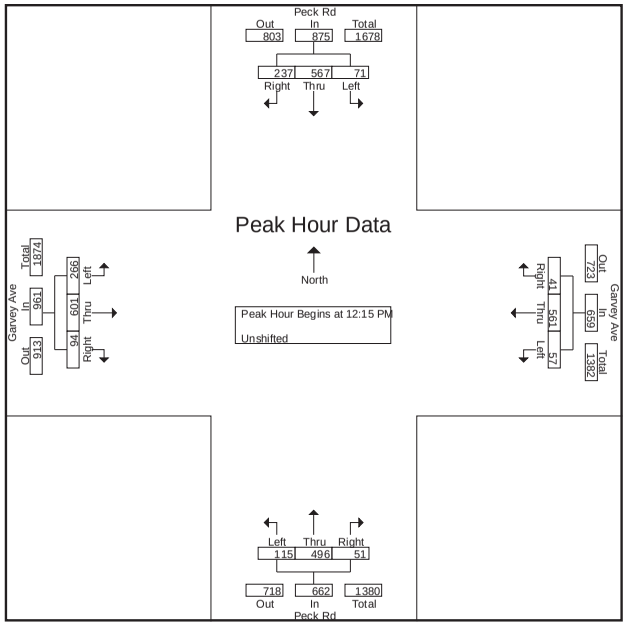

CITY TRAFFIC COUNTERS

626.991.7522

www.ctcounters.com

File Name : Valley_Garvey
Site Code : 00000000
Start Date : 6/5/2014
Page No : 1

Groups Printed- Unshifted

	Garvey Ave Southbound			Valley Blvd Westbound			Garvey Ave Northbound			Valley Blvd Eastbound			
Start Time	Left	Thru	Right	Left	Thru	Right	Left	Thru	Right	Left	Thru	Right	Int. Total
07:00 AM	12	60	30	51	138	4	9	35	43	15	86	1	484
07:15 AM	17	86	25	59	200	1	4	38	50	21	111	1	613
07:30 AM	29	117	49	59	195	2	6	63	77	19	111	1	728
07:45 AM	24	108	39	64	228	5	7	68	56	23	125	3	750
Total	82	371	143	233	761	12	26	204	226	78	433	6	2575
08:00 AM	23	104	46	51	176	1	7	58	70	15	125	2	678
08:15 AM	13	74	30	43	149	6	4	67	75	16	123	2	602
08:30 AM	15	59	33	57	162	2	7	54	57	21	121	2	590
08:45 AM	17	67	25	53	148	4	9	53	57	22	144	4	603
Total	68	304	134	204	635	13	27	232	259	74	513	10	2473
04:00 PM	19	66	35	46	119	5	8	114	74	26	203	6	721
04:15 PM	21	67	42	49	129	10	10	129	76	24	209	7	773
04:30 PM	10	83	28	39	145	8	13	152	78	29	220	7	812
04:45 PM	18	72	41	60	161	11	9	150	79	48	189	5	843
Total	68	288	146	194	554	34	40	545	307	127	821	25	3149
05:00 PM	15	80	32	42	139	6	8	144	87	33	197	2	785
05:15 PM	7	65	37	47	191	9	13	160	74	33	204	2	842
05:30 PM	10	74	38	52	152	5	4	131	88	49	182	2	787
05:45 PM	7	83	24	49	141	6	8	139	79	30	174	3	743
Total	39	302	131	190	623	26	33	574	328	145	757	9	3157
Grand Total	257	1265	554	821	2573	85	126	1555	1120	424	2524	50	11354
Apprch %	12.4	60.9	26.7	23.6	74	2.4	4.5	55.5	40	14.1	84.2	1.7	
Total %	2.3	11.1	4.9	7.2	22.7	0.7	1.1	13.7	9.9	3.7	22.2	0.4	

CITY TRAFFIC COUNTERS

626.991.7522

www.ctcounters.com

File Name : Valley_Garvey
Site Code : 00000000
Start Date : 6/5/2014
Page No : 2

	Garvey Ave Southbound				Valley Blvd Westbound				Garvey Ave Northbound				Valley Blvd Eastbound				
Start Time	Left	Thru	Right	App. Total	Left	Thru	Right	App. Total	Left	Thru	Right	App. Total	Left	Thru	Right	App. Total	Int. Total
Peak Hour Analysis From 07:00 AM to 11:45 AM - Peak 1 of 1																	
Peak Hour for Entire Intersection Begins at 07:15 AM																	
07:15 AM	17	86	25	128	59	200	1	260	4	38	50	92	21	111	1	133	613
07:30 AM	**29**	**117**	**49**	**195**	59	195	2	256	6	63	**77**	**146**	19	111	1	131	728
07:45 AM	24	108	39	171	**64**	**228**	**5**	**297**	**7**	**68**	56	131	**23**	**125**	**3**	**151**	**750**
08:00 AM	23	104	46	173	51	176	1	228	7	58	70	135	15	125	2	142	678
Total Volume	93	415	159	667	233	799	9	1041	24	227	253	504	78	472	7	557	2769
% App. Total	13.9	62.2	23.8		22.4	76.8	0.9		4.8	45	50.2		14	84.7	1.3		
PHF	.802	.887	.811	.855	.910	.876	.450	.876	.857	.835	.821	.863	.848	.944	.583	.922	.923

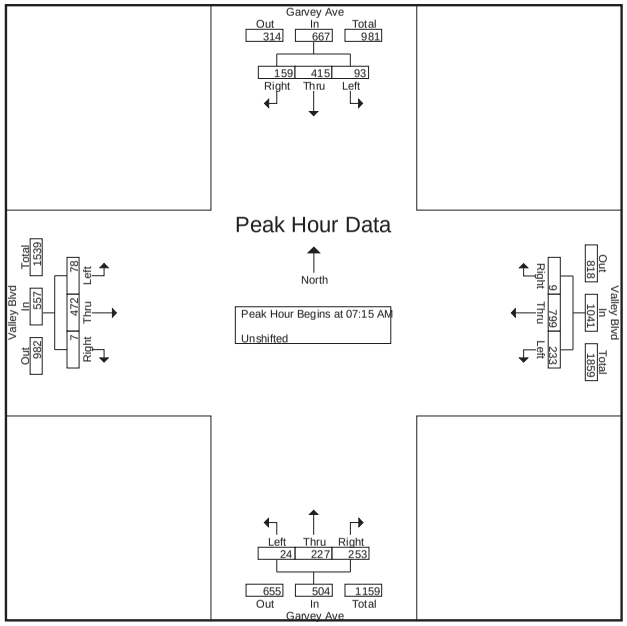

CITY TRAFFIC COUNTERS
626.991.7522
www.ctcounters.com

File Name : Valley_Garvey
Site Code : 00000000
Start Date : 6/5/2014
Page No : 3

	Garvey Ave Southbound				Valley Blvd Westbound				Garvey Ave Northbound				Valley Blvd Eastbound				
Start Time	Left	Thru	Right	App. Total	Left	Thru	Right	App. Total	Left	Thru	Right	App. Total	Left	Thru	Right	App. Total	Int. Total
Peak Hour Analysis From 12:00 PM to 05:45 PM - Peak 1 of 1																	
Peak Hour for Entire Intersection Begins at 04:30 PM																	
04:30 PM	10	**83**	28	121	39	145	8	192	**13**	152	78	243	29	**220**	**7**	**256**	812
04:45 PM	**18**	72	**41**	**131**	**60**	161	**11**	232	9	150	79	238	**48**	189	5	242	**843**
05:00 PM	15	80	32	127	42	139	6	187	8	144	**87**	239	33	197	2	232	785
05:15 PM	7	65	37	109	47	**191**	9	**247**	13	**160**	74	**247**	33	204	2	239	842
Total Volume	50	300	138	488	188	636	34	858	43	606	318	967	143	810	16	969	3282
% App. Total	10.2	61.5	28.3		21.9	74.1	4		4.4	62.7	32.9		14.8	83.6	1.7		
PHF	.694	.904	.841	.931	.783	.832	.773	.868	.827	.947	.914	.979	.745	.920	.571	.946	.973

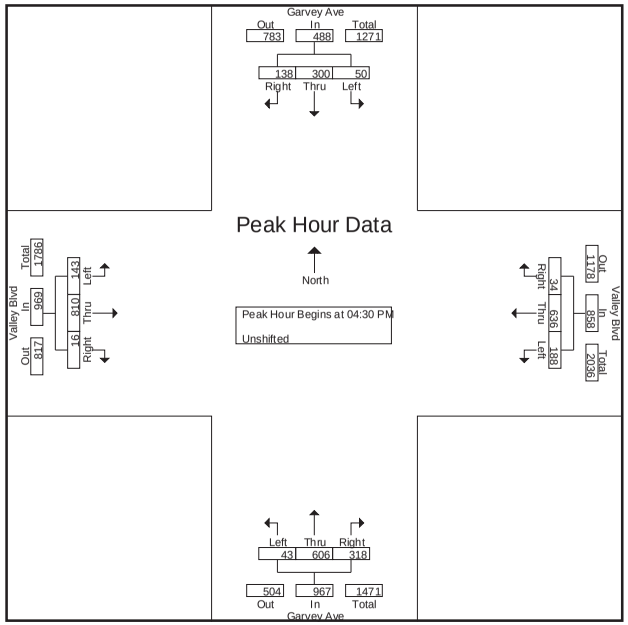

CITY TRAFFIC COUNTERS
626.991.7522
www.ctcounters.com

File Name : ValleyGarvey_Sat
Site Code : 00000000
Start Date : 6/14/2014
Page No : 1

Groups Printed- Unshifted

	Valley Blvd Southbound			Garvey Ave Westbound			Valley Blvd Northbound			Garvey Ave Eastbound			
Start Time	Left	Thru	Right	Left	Thru	Right	Left	Thru	Right	Left	Thru	Right	Int. Total
12:00 PM	41	134	0	19	75	48	57	156	0	11	97	78	716
12:15 PM	35	157	2	20	63	50	57	165	0	11	96	76	732
12:30 PM	34	176	0	17	72	51	52	154	0	11	98	95	760
12:45 PM	28	142	1	28	77	30	45	135	0	11	69	69	635
Total	138	609	3	84	287	179	211	610	0	44	360	318	2843
01:00 PM	37	161	1	20	62	45	49	153	2	14	95	94	733
01:15 PM	48	186	1	22	59	39	52	142	2	8	79	73	711
01:30 PM	33	135	0	21	81	53	44	162	3	10	99	58	699
01:45 PM	34	173	0	12	74	42	61	127	1	16	96	75	711
Total	152	655	2	75	276	179	206	584	8	48	369	300	2854
Grand Total	290	1264	5	159	563	358	417	1194	8	92	729	618	5697
Apprch %	18.6	81.1	0.3	14.7	52.1	33.1	25.8	73.7	0.5	6.4	50.7	42.9	
Total %	5.1	22.2	0.1	2.8	9.9	6.3	7.3	21	0.1	1.6	12.8	10.8	

CITY TRAFFIC COUNTERS

626.991.7522

www.ctcounters.com

File Name : ValleyGarvey_Sat
Site Code : 00000000
Start Date : 6/14/2014
Page No : 2

	Valley Blvd Southbound				Garvey Ave Westbound				Valley Blvd Northbound				Garvey Ave Eastbound				
Start Time	Left	Thru	Right	App. Total	Left	Thru	Right	App. Total	Left	Thru	Right	App. Total	Left	Thru	Right	App. Total	Int. Total
Peak Hour Analysis From 12:00 PM to 01:45 PM - Peak 1 of 1																	
Peak Hour for Entire Intersection Begins at 12:15 PM																	
12:15 PM	35	157	**2**	194	20	63	50	133	**57**	**165**	0	**222**	11	96	76	183	732
12:30 PM	34	**176**	0	**210**	17	72	**51**	**140**	52	154	0	206	11	**98**	**95**	**204**	**760**
12:45 PM	28	142	1	171	**28**	**77**	30	135	45	135	0	180	11	69	69	149	635
01:00 PM	**37**	161	1	199	20	62	45	127	49	153	**2**	204	**14**	95	94	203	733
Total Volume	134	636	4	774	85	274	176	535	203	607	2	812	47	358	334	739	2860
% App. Total	17.3	82.2	0.5		15.9	51.2	32.9		25	74.8	0.2		6.4	48.4	45.2		
PHF	.905	.903	.500	.921	.759	.890	.863	.955	.890	.920	.250	.914	.839	.913	.879	.906	.941

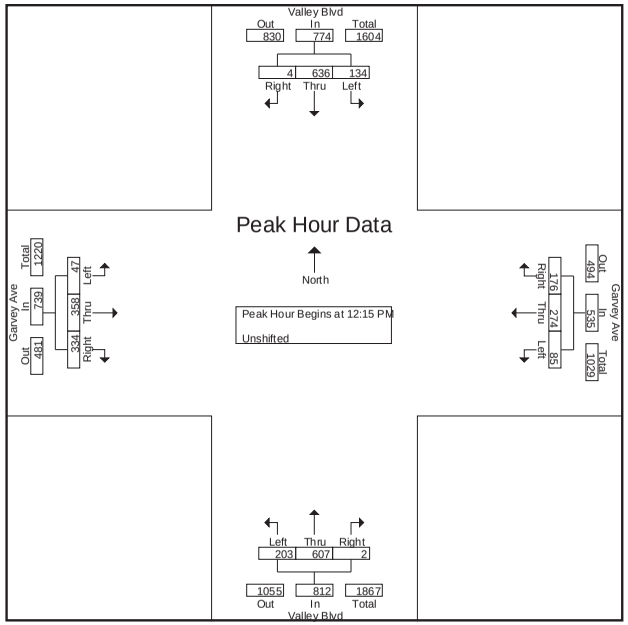

CITY TRAFFIC COUNTERS

626.991.7522

www.ctcounters.com

File Name : Durfee_LAzusa
Site Code : 00000000
Start Date : 6/5/2014
Page No : 1

Groups Printed- Unshifted

	Durfee Ave Southbound			Lower Azusa Rd Westbound			Durfee Ave Northbound			Lower Azusa Rd Eastbound			
Start Time	Left	Thru	Right	Left	Thru	Right	Left	Thru	Right	Left	Thru	Right	Int. Total
07:00 AM	35	0	0	8	245	5	3	4	0	4	120	11	435
07:15 AM	26	1	10	3	297	5	4	4	6	4	140	3	503
07:30 AM	40	4	6	5	262	6	14	8	7	2	138	3	495
07:45 AM	41	4	3	2	203	2	5	3	9	5	167	5	449
Total	142	9	19	18	1007	18	26	19	22	15	565	22	1882
08:00 AM	37	2	3	1	174	8	6	0	10	3	170	4	418
08:15 AM	33	2	0	3	196	8	4	1	4	5	170	3	429
08:30 AM	47	0	2	2	171	14	7	0	5	1	158	2	409
08:45 AM	25	0	1	2	190	12	6	1	6	1	152	5	401
Total	142	4	6	8	731	42	23	2	25	10	650	14	1657
04:00 PM	28	2	3	3	165	25	4	2	6	1	251	9	499
04:15 PM	58	1	3	2	154	39	5	1	5	1	236	4	509
04:30 PM	41	1	0	7	162	33	3	0	4	0	252	6	509
04:45 PM	34	3	1	9	163	39	7	2	9	3	249	10	529
Total	161	7	7	21	644	136	19	5	24	5	988	29	2046
05:00 PM	37	1	2	7	175	43	2	0	2	4	295	9	577
05:15 PM	33	2	1	5	187	47	7	2	3	1	349	6	643
05:30 PM	45	1	2	9	192	44	5	2	13	3	315	4	635
05:45 PM	32	0	2	6	181	38	6	1	7	3	254	6	536
Total	147	4	7	27	735	172	20	5	25	11	1213	25	2391
Grand Total	592	24	39	74	3117	368	88	31	96	41	3416	90	7976
Apprch %	90.4	3.7	6	2.1	87.6	10.3	40.9	14.4	44.7	1.2	96.3	2.5	
Total %	7.4	0.3	0.5	0.9	39.1	4.6	1.1	0.4	1.2	0.5	42.8	1.1	

CITY TRAFFIC COUNTERS
626.991.7522
www.ctcounters.com

File Name : Durfee_LAzusa
Site Code : 00000000
Start Date : 6/5/2014
Page No : 2

	Durfee Ave Southbound				Lower Azusa Rd Westbound				Durfee Ave Northbound				Lower Azusa Rd Eastbound				
Start Time	Left	Thru	Right	App. Total	Left	Thru	Right	App. Total	Left	Thru	Right	App. Total	Left	Thru	Right	App. Total	Int. Total
Peak Hour Analysis From 07:00 AM to 11:45 AM - Peak 1 of 1																	
Peak Hour for Entire Intersection Begins at 07:00 AM																	
07:00 AM	35	0	0	35	**8**	245	5	258	3	4	0	7	4	120	**11**	135	435
07:15 AM	26	1	**10**	37	3	**297**	5	**305**	4	4	6	14	4	140	3	147	**503**
07:30 AM	40	**4**	6	**50**	5	262	**6**	273	**14**	**8**	7	**29**	2	138	3	143	495
07:45 AM	**41**	4	3	48	2	203	2	207	5	3	**9**	17	**5**	**167**	5	**177**	449
Total Volume	142	9	19	170	18	1007	18	1043	26	19	22	67	15	565	22	602	1882
% App. Total	83.5	5.3	11.2		1.7	96.5	1.7		38.8	28.4	32.8		2.5	93.9	3.7		
PHF	.866	.563	.475	.850	.563	.848	.750	.855	.464	.594	.611	.578	.750	.846	.500	.850	.935

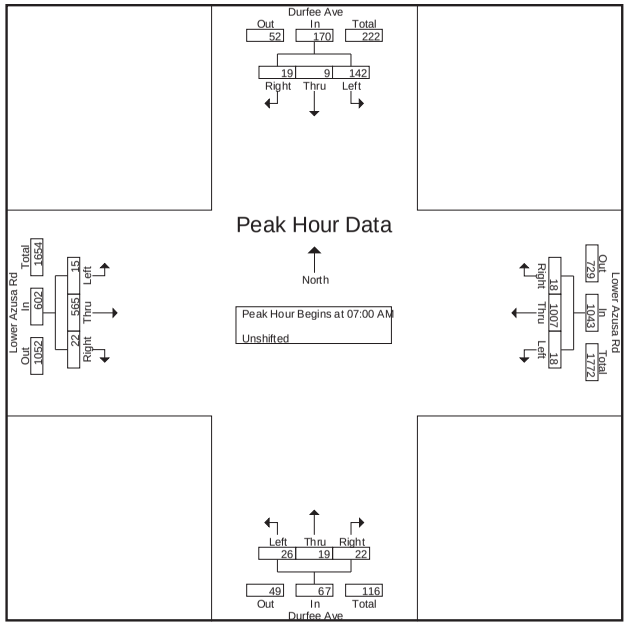

CITY TRAFFIC COUNTERS
626.991.7522
www.ctcounters.com

File Name : Durfee_LAzusa
Site Code : 00000000
Start Date : 6/5/2014
Page No : 3

	Durfee Ave Southbound				Lower Azusa Rd Westbound				Durfee Ave Northbound				Lower Azusa Rd Eastbound				
Start Time	Left	Thru	Right	App. Total	Left	Thru	Right	App. Total	Left	Thru	Right	App. Total	Left	Thru	Right	App. Total	Int. Total
Peak Hour Analysis From 12:00 PM to 05:45 PM - Peak 1 of 1																	
Peak Hour for Entire Intersection Begins at 05:00 PM																	
05:00 PM	37	1	**2**	40	7	175	43	225	2	0	2	4	**4**	295	**9**	308	577
05:15 PM	33	**2**	1	36	5	187	**47**	239	**7**	**2**	3	12	1	**349**	6	**356**	**643**
05:30 PM	**45**	1	2	**48**	**9**	**192**	44	**245**	5	2	**13**	**20**	3	315	4	322	635
05:45 PM	32	0	2	34	6	181	38	225	6	1	7	14	3	254	6	263	536
Total Volume	147	4	7	158	27	735	172	934	20	5	25	50	11	1213	25	1249	2391
% App. Total	93	2.5	4.4		2.9	78.7	18.4		40	10	50		0.9	97.1	2		
PHF	.817	.500	.875	.823	.750	.957	.915	.953	.714	.625	.481	.625	.688	.869	.694	.877	.930

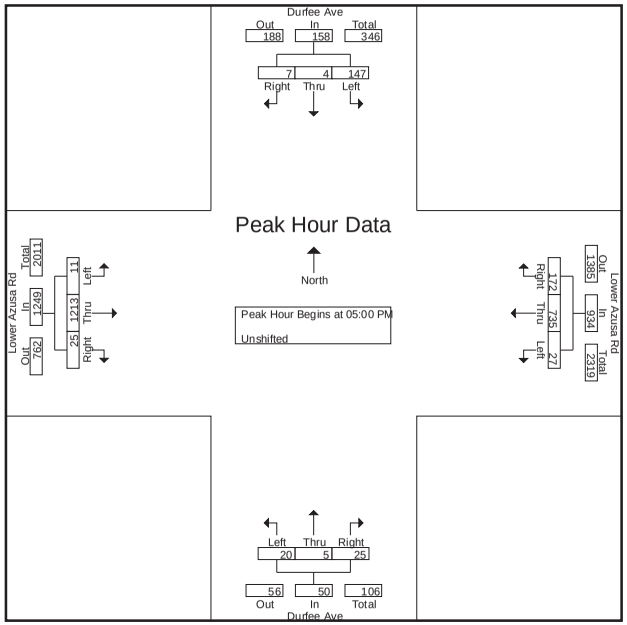

CITY TRAFFIC COUNTERS

626.991.7522

www.ctcounters.com

File Name : durfee_lazusa_sat
Site Code : 00000000
Start Date : 6/14/2014
Page No : 1

Groups Printed- Unshifted

	Durfee Ave Southbound			Lower Azusa Rd Westbound			Durfee Ave Northbound			Lower Azusa Rd Eastbound			
Start Time	Left	Thru	Right	Left	Thru	Right	Left	Thru	Right	Left	Thru	Right	Int. Total
12:00 PM	23	0	0	2	133	10	1	0	0	2	151	5	327
12:15 PM	30	0	2	2	136	21	3	0	3	4	159	5	365
12:30 PM	24	3	4	4	171	17	0	1	5	2	196	1	428
12:45 PM	30	12	7	11	198	29	4	9	6	10	214	3	533
Total	107	15	13	19	638	77	8	10	14	18	720	14	1653
01:00 PM	46	6	9	7	157	22	11	5	2	7	168	1	441
01:15 PM	40	3	0	1	132	12	2	0	1	3	148	0	342
01:30 PM	35	1	2	3	144	10	1	1	2	4	155	1	359
01:45 PM	34	1	1	0	149	18	3	2	0	4	149	0	361
Total	155	11	12	11	582	62	17	8	5	18	620	2	1503
Grand Total	262	26	25	30	1220	139	25	18	19	36	1340	16	3156
Apprch %	83.7	8.3	8	2.2	87.8	10	40.3	29	30.6	2.6	96.3	1.1	
Total %	8.3	0.8	0.8	1	38.7	4.4	0.8	0.6	0.6	1.1	42.5	0.5	

CITY TRAFFIC COUNTERS

626.991.7522

www.ctcounters.com

File Name : durfee_lazusa_sat
Site Code : 00000000
Start Date : 6/14/2014
Page No : 2

	Durfee Ave Southbound				Lower Azusa Rd Westbound				Durfee Ave Northbound				Lower Azusa Rd Eastbound				
Start Time	Left	Thru	Right	App. Total	Left	Thru	Right	App. Total	Left	Thru	Right	App. Total	Left	Thru	Right	App. Total	Int. Total
Peak Hour Analysis From 12:00 PM to 01:45 PM - Peak 1 of 1																	
Peak Hour for Entire Intersection Begins at 12:15 PM																	
12:15 PM	30	0	2	32	2	136	21	159	3	0	3	6	4	159	**5**	168	365
12:30 PM	24	3	4	31	4	171	17	192	0	1	5	6	2	196	1	199	428
12:45 PM	30	**12**	7	49	**11**	**198**	**29**	**238**	4	**9**	**6**	**19**	**10**	**214**	3	**227**	**533**
01:00 PM	**46**	6	**9**	**61**	7	157	22	186	**11**	5	2	18	7	168	1	176	441
Total Volume	130	21	22	173	24	662	89	775	18	15	16	49	23	737	10	770	1767
% App. Total	75.1	12.1	12.7		3.1	85.4	11.5		36.7	30.6	32.7		3	95.7	1.3		
PHF	.707	.438	.611	.709	.545	.836	.767	.814	.409	.417	.667	.645	.575	.861	.500	.848	.829

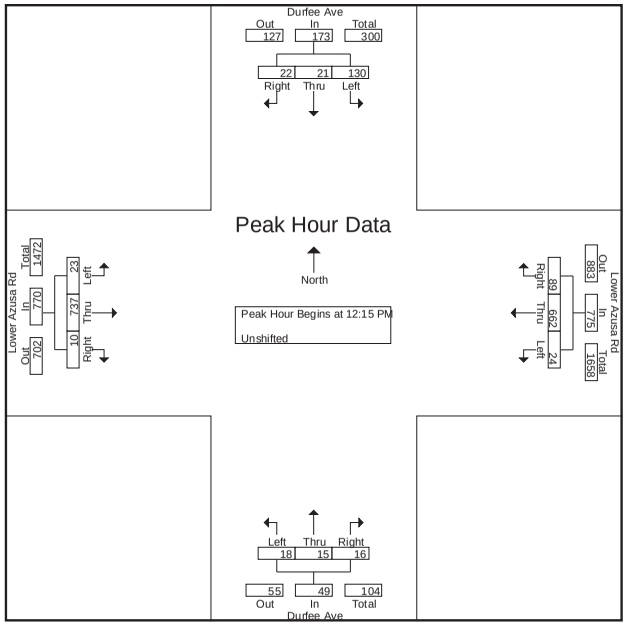

CITY TRAFFIC COUNTERS

626.991.7522

www.ctcounters.com

File Name : Durfee_Ramona
Site Code : 00000000
Start Date : 6/5/2014
Page No : 1

Groups Printed- Unshifted

	Durfee Ave Southbound			Ramona Blvd Westbound			Durfee Ave Northbound			Ramona Blvd Eastbound			
Start Time	Left	Thru	Right	Left	Thru	Right	Left	Thru	Right	Left	Thru	Right	Int. Total
07:00 AM	0	0	0	30	248	0	14	0	29	0	123	10	454
07:15 AM	0	0	0	34	306	0	13	0	39	0	129	14	535
07:30 AM	0	0	0	33	303	0	13	0	22	0	163	21	555
07:45 AM	0	0	0	42	282	0	10	0	46	0	178	22	580
Total	0	0	0	139	1139	0	50	0	136	0	593	67	2124
08:00 AM	0	0	0	68	273	0	13	0	27	0	178	20	579
08:15 AM	0	0	0	44	249	0	16	0	36	0	153	17	515
08:30 AM	0	0	0	33	221	0	8	0	22	0	138	15	437
08:45 AM	0	0	0	22	228	0	8	0	18	0	146	11	433
Total	0	0	0	167	971	0	45	0	103	0	615	63	1964
04:00 PM	0	0	0	19	140	0	15	0	29	0	176	9	388
04:15 PM	0	0	0	22	154	0	7	0	22	0	175	14	394
04:30 PM	0	0	0	25	106	0	14	0	40	0	197	9	391
04:45 PM	0	0	0	28	165	0	9	0	41	0	209	7	459
Total	0	0	0	94	565	0	45	0	132	0	757	39	1632
05:00 PM	0	0	0	28	158	0	10	0	48	0	236	22	502
05:15 PM	0	0	0	43	180	0	9	0	63	0	226	16	537
05:30 PM	0	0	0	28	142	0	7	0	47	0	197	15	436
05:45 PM	0	0	0	18	163	0	9	0	45	0	200	8	443
Total	0	0	0	117	643	0	35	0	203	0	859	61	1918
Grand Total	0	0	0	517	3318	0	175	0	574	0	2824	230	7638
Apprch %	0	0	0	13.5	86.5	0	23.4	0	76.6	0	92.5	7.5	
Total %	0	0	0	6.8	43.4	0	2.3	0	7.5	0	37	3	

CITY TRAFFIC COUNTERS

626.991.7522

www.ctcounters.com

File Name : Durfee_Ramona
Site Code : 00000000
Start Date : 6/5/2014
Page No : 2

	Durfee Ave Southbound				Ramona Blvd Westbound				Durfee Ave Northbound				Ramona Blvd Eastbound				
Start Time	Left	Thru	Right	App. Total	Left	Thru	Right	App. Total	Left	Thru	Right	App. Total	Left	Thru	Right	App. Total	Int. Total
Peak Hour Analysis From 07:00 AM to 11:45 AM - Peak 1 of 1																	
Peak Hour for Entire Intersection Begins at 07:15 AM																	
07:15 AM	0	0	0	0	34	**306**	0	340	**13**	0	39	52	0	129	14	143	535
07:30 AM	0	0	0	0	33	303	0	336	13	0	22	35	0	163	21	184	555
07:45 AM	0	0	0	0	42	282	0	324	10	0	**46**	**56**	0	**178**	**22**	**200**	**580**
08:00 AM	0	0	0	0	**68**	273	0	**341**	13	0	27	40	0	178	20	198	579
Total Volume	0	0	0	0	177	1164	0	1341	49	0	134	183	0	648	77	725	2249
% App. Total	0	0	0		13.2	86.8	0		26.8	0	73.2		0	89.4	10.6		
PHF	.000	.000	.000	.000	.651	.951	.000	.983	.942	.000	.728	.817	.000	.910	.875	.906	.969

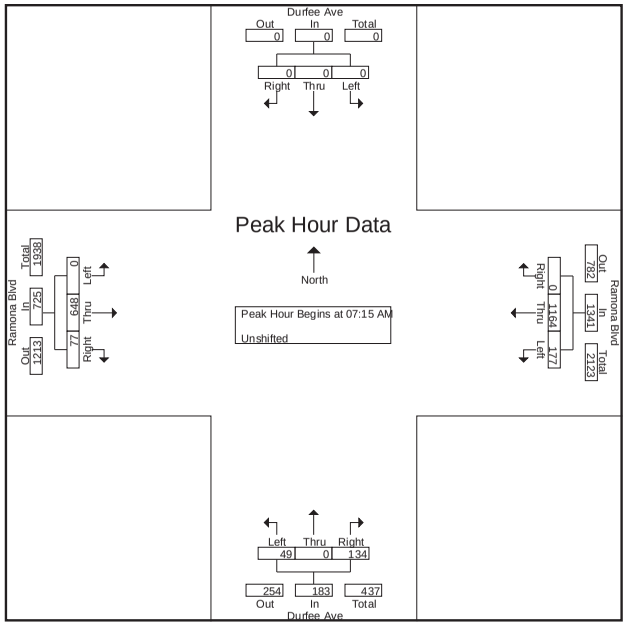

CITY TRAFFIC COUNTERS

626.991.7522

www.ctcounters.com

File Name : Durfee_Ramona
Site Code : 00000000
Start Date : 6/5/2014
Page No : 3

	Durfee Ave Southbound				Ramona Blvd Westbound				Durfee Ave Northbound				Ramona Blvd Eastbound				
Start Time	Left	Thru	Right	App. Total	Left	Thru	Right	App. Total	Left	Thru	Right	App. Total	Left	Thru	Right	App. Total	Int. Total
Peak Hour Analysis From 12:00 PM to 05:45 PM - Peak 1 of 1																	
Peak Hour for Entire Intersection Begins at 04:45 PM																	
04:45 PM	0	0	0	0	28	165	0	193	9	0	41	50	0	209	7	216	459
05:00 PM	0	0	0	0	28	158	0	186	**10**	0	48	58	0	**236**	**22**	**258**	502
05:15 PM	0	0	0	0	**43**	**180**	0	**223**	9	0	**63**	**72**	0	226	16	242	**537**
05:30 PM	0	0	0	0	28	142	0	170	7	0	47	54	0	197	15	212	436
Total Volume	0	0	0	0	127	645	0	772	35	0	199	234	0	868	60	928	1934
% App. Total	0	0	0		16.5	83.5	0		15	0	85		0	93.5	6.5		
PHF	.000	.000	.000	.000	.738	.896	.000	.865	.875	.000	.790	.813	.000	.919	.682	.899	.900

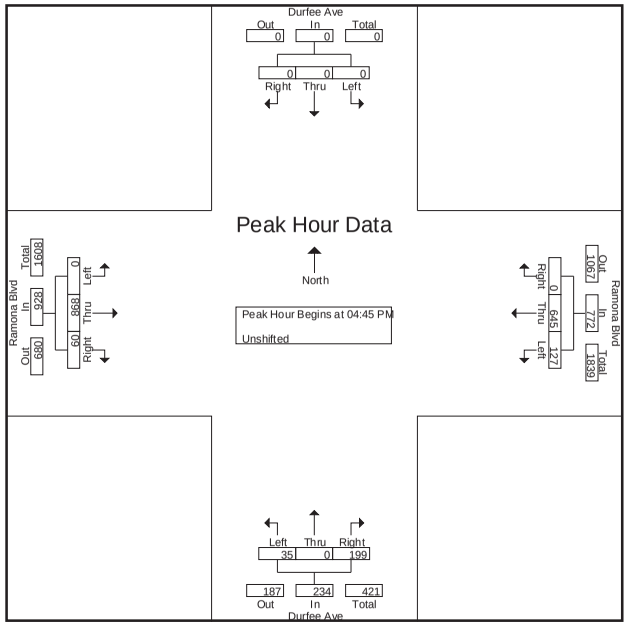

CITY TRAFFIC COUNTERS

626.991.7522

www.ctcounters.com

File Name : Ramona_Durfee_Sat
Site Code : 00000000
Start Date : 6/14/2014
Page No : 1

Groups Printed- Unshifted

	Durfee Ave Southbound			Ramona Blvd Westbound			Durfee Ave Northbound			Ramona Blvd Eastbound			
Start Time	Left	Thru	Right	Left	Thru	Right	Left	Thru	Right	Left	Thru	Right	Int. Total
12:00 PM	0	0	0	16	149	0	8	0	27	0	202	12	414
12:15 PM	0	0	0	14	141	0	18	0	32	0	186	25	416
12:30 PM	0	0	0	18	161	0	11	0	27	0	176	17	410
12:45 PM	0	0	0	19	130	0	8	0	31	0	198	20	406
Total	0	0	0	67	581	0	45	0	117	0	762	74	1646
01:00 PM	0	0	0	19	143	0	5	0	23	0	182	11	383
01:15 PM	0	0	0	18	140	0	10	0	25	0	190	12	395
01:30 PM	0	0	0	29	135	0	9	0	22	0	222	14	431
01:45 PM	0	0	0	17	148	0	7	0	25	0	172	17	386
Total	0	0	0	83	566	0	31	0	95	0	766	54	1595
Grand Total	0	0	0	150	1147	0	76	0	212	0	1528	128	3241
Apprch %	0	0	0	11.6	88.4	0	26.4	0	73.6	0	92.3	7.7	
Total %	0	0	0	4.6	35.4	0	2.3	0	6.5	0	47.1	3.9	

CITY TRAFFIC COUNTERS
626.991.7522
www.ctcounters.com

File Name : Ramona_Durfee_Sat
Site Code : 00000000
Start Date : 6/14/2014
Page No : 2

	Durfee Ave Southbound				Ramona Blvd Westbound				Durfee Ave Northbound				Ramona Blvd Eastbound				
Start Time	Left	Thru	Right	App. Total	Left	Thru	Right	App. Total	Left	Thru	Right	App. Total	Left	Thru	Right	App. Total	Int. Total
Peak Hour Analysis From 12:00 PM to 01:45 PM - Peak 1 of 1																	
Peak Hour for Entire Intersection Begins at 12:00 PM																	
12:00 PM	0	0	0	0	16	149	0	165	8	0	27	35	0	**202**	12	214	414
12:15 PM	0	0	0	0	14	141	0	155	**18**	0	**32**	**50**	0	186	**25**	211	**416**
12:30 PM	0	0	0	0	18	**161**	0	**179**	11	0	27	38	0	176	17	193	410
12:45 PM	0	0	0	0	**19**	130	0	149	8	0	31	39	0	198	20	**218**	406
Total Volume	0	0	0	0	67	581	0	648	45	0	117	162	0	762	74	836	1646
% App. Total	0	0	0		10.3	89.7	0		27.8	0	72.2		0	91.1	8.9		
PHF	.000	.000	.000	.000	.882	.902	.000	.905	.625	.000	.914	.810	.000	.943	.740	.959	.989

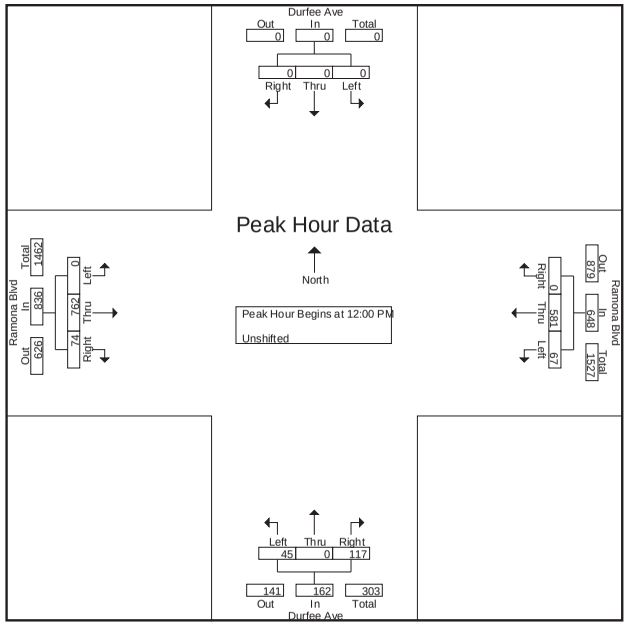

CITY TRAFFIC COUNTERS
626.991.7522
www.ctcounters.com

File Name : Rosemead_LasTunas
Site Code : 00000000
Start Date : 9/9/2014
Page No : 1

Groups Printed- Unshifted

	Rosemead Blvd Southbound			Las Tunas Dr Westbound			Rosemead Blvd Northbound			Las Tunas Dr Eastbound			
Start Time	Left	Thru	Right	Left	Thru	Right	Left	Thru	Right	Left	Thru	Right	Int. Total
07:00 AM	7	175	19	30	187	15	26	204	12	27	40	13	755
07:15 AM	14	231	27	14	200	16	31	215	5	20	62	18	853
07:30 AM	11	213	29	20	280	22	38	203	11	25	88	25	965
07:45 AM	29	262	13	20	280	20	44	220	19	32	120	28	1087
Total	61	881	88	84	947	73	139	842	47	104	310	84	3660
08:00 AM	31	257	35	26	315	34	52	272	8	42	124	27	1223
08:15 AM	45	253	36	32	304	23	60	226	13	29	115	15	1151
08:30 AM	34	207	31	35	277	28	52	176	15	30	99	26	1010
08:45 AM	25	237	32	30	212	11	62	199	15	31	105	17	976
Total	135	954	134	123	1108	96	226	873	51	132	443	85	4360
04:00 PM	56	277	17	33	170	20	45	219	34	42	211	64	1188
04:15 PM	52	317	16	33	141	21	43	212	42	43	179	41	1140
04:30 PM	51	274	20	41	151	17	46	229	33	47	221	41	1171
04:45 PM	72	314	31	51	118	17	53	234	31	36	178	52	1187
Total	231	1182	84	158	580	75	187	894	140	168	789	198	4686
05:00 PM	77	276	28	41	177	21	44	222	34	56	231	44	1251
05:15 PM	66	270	20	37	171	27	59	201	32	49	194	46	1172
05:30 PM	73	311	25	45	167	22	47	207	27	45	224	59	1252
05:45 PM	97	391	19	42	194	33	64	215	30	39	200	38	1362
Total	313	1248	92	165	709	103	214	845	123	189	849	187	5037
Grand Total	740	4265	398	530	3344	347	766	3454	361	593	2391	554	17743
Apprch %	13.7	78.9	7.4	12.6	79.2	8.2	16.7	75.4	7.9	16.8	67.6	15.7	
Total %	4.2	24	2.2	3	18.8	2	4.3	19.5	2	3.3	13.5	3.1	

CITY TRAFFIC COUNTERS
626.991.7522
www.ctcounters.com

File Name : Rosemead_LasTunas
Site Code : 00000000
Start Date : 9/9/2014
Page No : 2

	Rosemead Blvd Southbound				Las Tunas Dr Westbound				Rosemead Blvd Northbound				Las Tunas Dr Eastbound				
Start Time	Left	Thru	Right	App. Total	Left	Thru	Right	App. Total	Left	Thru	Right	App. Total	Left	Thru	Right	App. Total	Int. Total
Peak Hour Analysis From 07:00 AM to 11:45 AM - Peak 1 of 1																	
Peak Hour for Entire Intersection Begins at 07:45 AM																	
07:45 AM	29	**262**	13	304	20	280	20	320	44	220	**19**	283	32	120	**28**	180	1087
08:00 AM	31	257	35	323	26	**315**	**34**	**375**	52	**272**	8	**332**	**42**	**124**	27	**193**	**1223**
08:15 AM	**45**	253	**36**	**334**	32	304	23	359	**60**	226	13	299	29	115	15	159	1151
08:30 AM	34	207	31	272	**35**	277	28	340	52	176	15	243	30	99	26	155	1010
Total Volume	139	979	115	1233	113	1176	105	1394	208	894	55	1157	133	458	96	687	4471
% App. Total	11.3	79.4	9.3		8.1	84.4	7.5		18	77.3	4.8		19.4	66.7	14		
PHF	.772	.934	.799	.923	.807	.933	.772	.929	.867	.822	.724	.871	.792	.923	.857	.890	.914

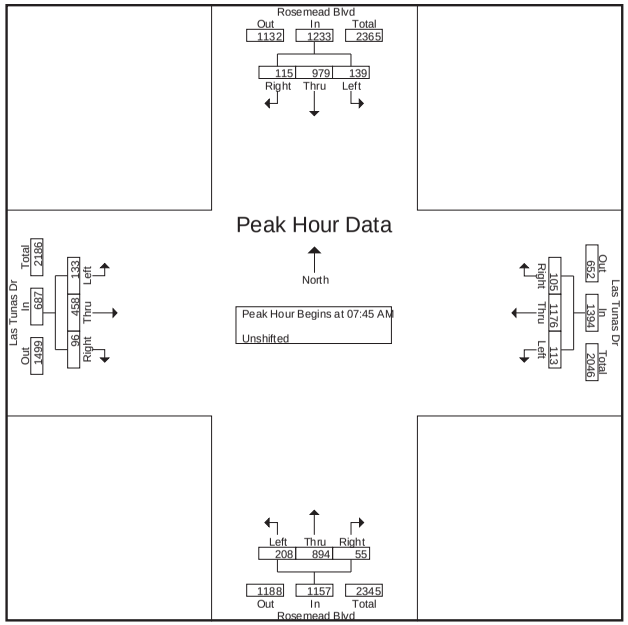

CITY TRAFFIC COUNTERS
626.991.7522
www.ctcounters.com

File Name : Rosemead_LasTunas
Site Code : 00000000
Start Date : 9/9/2014
Page No : 3

	Rosemead Blvd Southbound				Las Tunas Dr Westbound				Rosemead Blvd Northbound				Las Tunas Dr Eastbound				
Start Time	Left	Thru	Right	App. Total	Left	Thru	Right	App. Total	Left	Thru	Right	App. Total	Left	Thru	Right	App. Total	Int. Total
Peak Hour Analysis From 12:00 PM to 05:45 PM - Peak 1 of 1																	
Peak Hour for Entire Intersection Begins at 05:00 PM																	
05:00 PM	77	276	**28**	381	41	177	21	239	44	**222**	**34**	300	**56**	**231**	44	**331**	1251
05:15 PM	66	270	20	356	37	171	27	235	59	201	32	292	49	194	46	289	1172
05:30 PM	73	311	25	409	**45**	167	22	234	47	207	27	281	45	224	**59**	328	1252
05:45 PM	**97**	**391**	19	**507**	42	**194**	**33**	**269**	**64**	215	30	**309**	39	200	38	277	**1362**
Total Volume	313	1248	92	1653	165	709	103	977	214	845	123	1182	189	849	187	1225	5037
% App. Total	18.9	75.5	5.6		16.9	72.6	10.5		18.1	71.5	10.4		15.4	69.3	15.3		
PHF	.807	.798	.821	.815	.917	.914	.780	.908	.836	.952	.904	.956	.844	.919	.792	.925	.925

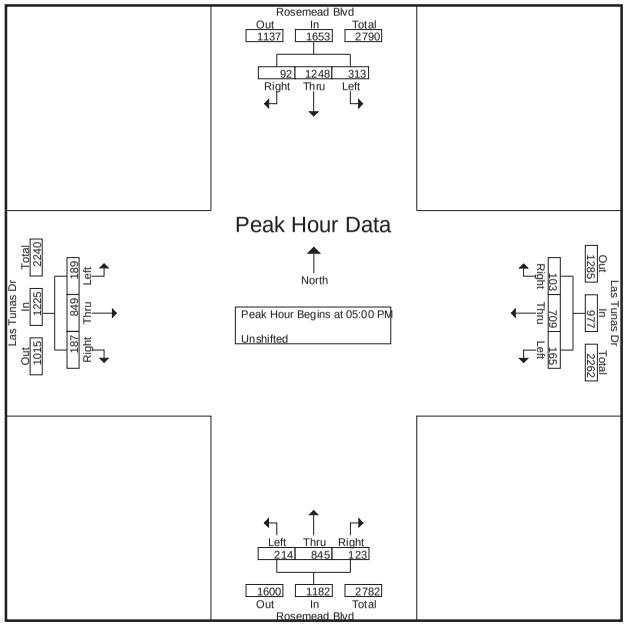

CITY TRAFFIC COUNTERS

626.991.7522

www.ctcounters.com

File Name : Rose_LasTunas_Sat
Site Code : 00000000
Start Date : 9/6/2014
Page No : 1

Groups Printed- Unshifted

	Rosemead Blvd Southbound			Las Tunas Dr Westbound			Rosemead Blvd Northbound			Las Tunas Dr Eastbound			
Start Time	Left	Thru	Right	Left	Thru	Right	Left	Thru	Right	Left	Thru	Right	Int. Total
12:00 PM	57	197	24	54	200	15	60	253	32	59	188	35	1174
12:15 PM	58	244	36	35	137	14	66	225	40	68	176	35	1134
12:30 PM	51	221	20	49	204	17	67	204	41	66	172	33	1145
12:45 PM	63	194	37	62	153	18	85	240	33	58	167	40	1150
Total	229	856	117	200	694	64	278	922	146	251	703	143	4603
01:00 PM	51	185	34	54	196	20	89	232	54	39	176	40	1170
01:15 PM	45	199	29	40	127	15	74	285	48	58	145	38	1103
01:30 PM	30	195	25	42	163	15	82	214	62	45	176	35	1084
01:45 PM	51	235	18	47	128	9	65	203	52	70	163	27	1068
Total	177	814	106	183	614	59	310	934	216	212	660	140	4425
Grand Total	406	1670	223	383	1308	123	588	1856	362	463	1363	283	9028
Apprch %	17.7	72.6	9.7	21.1	72.1	6.8	21	66.1	12.9	22	64.6	13.4	
Total %	4.5	18.5	2.5	4.2	14.5	1.4	6.5	20.6	4	5.1	15.1	3.1	

CITY TRAFFIC COUNTERS

626.991.7522

www.ctcounters.com

File Name : Rose_LasTunas_Sat
Site Code : 00000000
Start Date : 9/6/2014
Page No : 2

	Rosemead Blvd Southbound				Las Tunas Dr Westbound				Rosemead Blvd Northbound				Las Tunas Dr Eastbound				
Start Time	Left	Thru	Right	App. Total	Left	Thru	Right	App. Total	Left	Thru	Right	App. Total	Left	Thru	Right	App. Total	Int. Total
Peak Hour Analysis From 12:00 PM to 01:45 PM - Peak 1 of 1																	
Peak Hour for Entire Intersection Begins at 12:00 PM																	
12:00 PM	57	197	24	278	54	200	15	269	60	**253**	32	345	59	**188**	35	**282**	**1174**
12:15 PM	58	**244**	36	**338**	35	137	14	186	66	225	40	331	**68**	176	35	279	1134
12:30 PM	51	221	20	292	49	**204**	17	**270**	67	204	**41**	312	66	172	33	271	1145
12:45 PM	**63**	194	**37**	294	**62**	153	**18**	233	**85**	240	33	**358**	58	167	**40**	265	1150
Total Volume	229	856	117	1202	200	694	64	958	278	922	146	1346	251	703	143	1097	4603
% App. Total	19.1	71.2	9.7		20.9	72.4	6.7		20.7	68.5	10.8		22.9	64.1	13		
PHF	.909	.877	.791	.889	.806	.850	.889	.887	.818	.911	.890	.940	.923	.935	.894	.973	.980

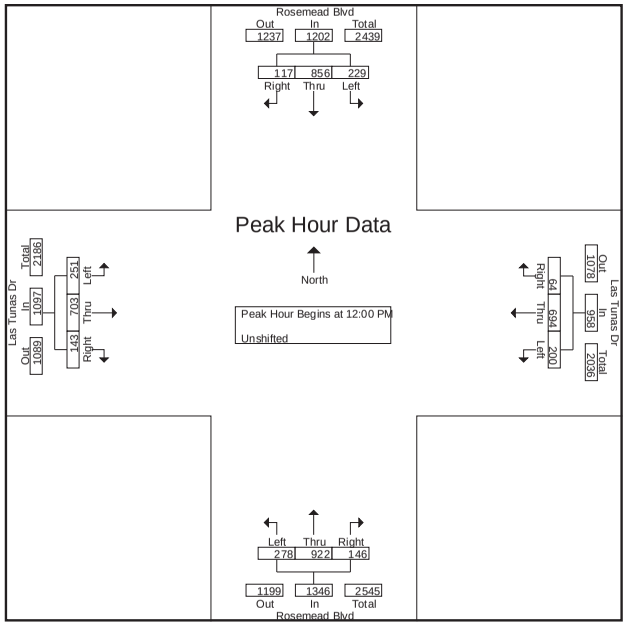

CITY TRAFFIC COUNTERS

626.991.7522

www.ctcounters.com

File Name : rosemead_loweraz
Site Code : 00000000
Start Date : 9/9/2014
Page No : 1

Groups Printed- Unshifted

	Rosemead Blvd Southbound			Lower Azusa Rd Westbound			Rosemead Blvd Northbound			Lower Azusa Rd Eastbound			
Start Time	Left	Thru	Right	Left	Thru	Right	Left	Thru	Right	Left	Thru	Right	Int. Total
07:00 AM	13	241	0	165	0	57	0	234	38	0	0	0	748
07:15 AM	13	318	0	146	0	35	1	228	49	0	0	0	790
07:30 AM	28	229	0	206	0	32	0	222	52	0	0	0	769
07:45 AM	26	248	0	178	0	37	1	288	65	0	0	0	843
Total	80	1036	0	695	0	161	2	972	204	0	0	0	3150
08:00 AM	32	267	0	232	2	43	1	313	60	0	0	0	950
08:15 AM	22	272	0	195	0	47	0	265	70	0	0	0	871
08:30 AM	26	233	0	197	0	49	2	231	41	0	0	0	779
08:45 AM	26	294	0	195	0	60	0	259	50	0	0	0	884
Total	106	1066	0	819	2	199	3	1068	221	0	0	0	3484
04:00 PM	40	312	1	101	0	36	1	288	71	0	2	1	853
04:15 PM	43	337	2	105	0	30	5	309	73	2	0	1	907
04:30 PM	36	312	0	190	0	40	5	311	58	1	4	1	958
04:45 PM	67	445	2	99	0	30	2	313	66	0	2	1	1027
Total	186	1406	5	495	0	136	13	1221	268	3	8	4	3745
05:00 PM	45	285	0	125	0	42	3	289	64	2	4	3	862
05:15 PM	46	273	0	127	0	47	1	280	61	0	1	0	836
05:30 PM	53	391	0	101	0	41	2	260	72	0	3	0	923
05:45 PM	64	387	0	105	0	50	4	279	84	0	0	1	974
Total	208	1336	0	458	0	180	10	1108	281	2	8	4	3595
Grand Total	580	4844	5	2467	2	676	28	4369	974	5	16	8	13974
Apprch %	10.7	89.2	0.1	78.4	0.1	21.5	0.5	81.3	18.1	17.2	55.2	27.6	
Total %	4.2	34.7	0	17.7	0	4.8	0.2	31.3	7	0	0.1	0.1	

CITY TRAFFIC COUNTERS

626.991.7522

www.ctcounters.com

File Name : rosemead_loweraz
Site Code : 00000000
Start Date : 9/9/2014
Page No : 2

	Rosemead Blvd Southbound				Lower Azusa Rd Westbound				Rosemead Blvd Northbound				Lower Azusa Rd Eastbound				
Start Time	Left	Thru	Right	App. Total	Left	Thru	Right	App. Total	Left	Thru	Right	App. Total	Left	Thru	Right	App. Total	Int. Total
Peak Hour Analysis From 07:00 AM to 11:45 AM - Peak 1 of 1																	
Peak Hour for Entire Intersection Begins at 08:00 AM																	
08:00 AM	**32**	267	0	299	**232**	**2**	43	**277**	1	**313**	60	**374**	0	0	0	0	**950**
08:15 AM	22	272	0	294	195	0	47	242	0	265	**70**	335	0	0	0	0	871
08:30 AM	26	233	0	259	197	0	49	246	**2**	231	41	274	0	0	0	0	779
08:45 AM	26	**294**	0	**320**	195	0	**60**	255	0	259	50	309	0	0	0	0	884
Total Volume	106	1066	0	1172	819	2	199	1020	3	1068	221	1292	0	0	0	0	3484
% App. Total	9	91	0		80.3	0.2	19.5		0.2	82.7	17.1		0	0	0		
PHF	.828	.906	.000	.916	.883	.250	.829	.921	.375	.853	.789	.864	.000	.000	.000	.000	.917

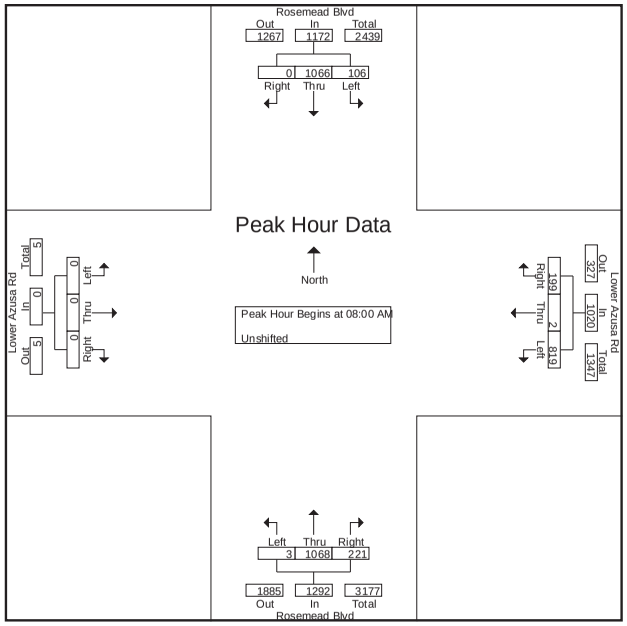

CITY TRAFFIC COUNTERS

626.991.7522

www.ctcounters.com

File Name : rosemead_loweraz
Site Code : 00000000
Start Date : 9/9/2014
Page No : 3

	Rosemead Blvd Southbound				Lower Azusa Rd Westbound				Rosemead Blvd Northbound				Lower Azusa Rd Eastbound				
Start Time	Left	Thru	Right	App. Total	Left	Thru	Right	App. Total	Left	Thru	Right	App. Total	Left	Thru	Right	App. Total	Int. Total
Peak Hour Analysis From 12:00 PM to 05:45 PM - Peak 1 of 1																	
Peak Hour for Entire Intersection Begins at 04:15 PM																	
04:15 PM	43	337	**2**	382	105	0	30	135	**5**	309	**73**	**387**	**2**	0	1	3	907
04:30 PM	36	312	0	348	**190**	0	40	**230**	5	311	58	374	1	**4**	1	6	958
04:45 PM	**67**	**445**	2	**514**	99	0	30	129	2	**313**	66	381	0	2	1	3	**1027**
05:00 PM	45	285	0	330	125	0	**42**	167	3	289	64	356	2	4	**3**	**9**	862
Total Volume	191	1379	4	1574	519	0	142	661	15	1222	261	1498	5	10	6	21	3754
% App. Total	12.1	87.6	0.3		78.5	0	21.5		1	81.6	17.4		23.8	47.6	28.6		
PHF	.713	.775	.500	.766	.683	.000	.845	.718	.750	.976	.894	.968	.625	.625	.500	.583	.914

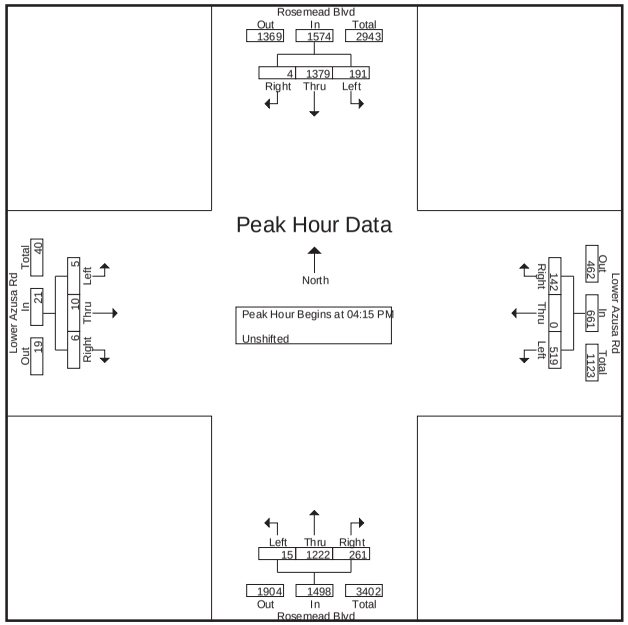

CITY TRAFFIC COUNTERS

626.991.7522

www.ctcounters.com

File Name : Rosemead_LowerAz_Sat
Site Code : 00000000
Start Date : 9/6/2014
Page No : 1

Groups Printed- Unshifted

	Rosemead Blvd Southbound			Lower Azusa Rd Westbound			Rosemead Blvd Northbound			Lower Azusa Rd Eastbound			
Start Time	Left	Thru	Right	Left	Thru	Right	Left	Thru	Right	Left	Thru	Right	Int. Total
12:00 PM	0	295	38	106	0	46	0	325	67	0	0	0	877
12:15 PM	0	310	35	120	1	36	0	297	88	1	0	0	888
12:30 PM	0	318	39	92	2	29	2	357	71	0	0	1	911
12:45 PM	0	269	22	118	0	36	0	317	73	0	0	0	835
Total	0	1192	134	436	3	147	2	1296	299	1	0	1	3511
01:00 PM	0	274	25	121	0	31	0	307	77	1	0	0	836
01:15 PM	0	284	21	170	0	38	0	327	81	0	0	0	921
01:30 PM	0	288	34	112	0	29	0	361	82	0	0	0	906
01:45 PM	0	270	37	127	1	29	0	304	79	0	0	0	847
Total	0	1116	117	530	1	127	0	1299	319	1	0	0	3510
Grand Total	0	2308	251	966	4	274	2	2595	618	2	0	1	7021
Apprch %	0	90.2	9.8	77.7	0.3	22	0.1	80.7	19.2	66.7	0	33.3	
Total %	0	32.9	3.6	13.8	0.1	3.9	0	37	8.8	0	0	0	

CITY TRAFFIC COUNTERS
626.991.7522
www.ctcounters.com

File Name : Rosemead_LowerAz_Sat
Site Code : 00000000
Start Date : 9/6/2014
Page No : 2

	Rosemead Blvd Southbound				Lower Azusa Rd Westbound				Rosemead Blvd Northbound				Lower Azusa Rd Eastbound				
Start Time	Left	Thru	Right	App. Total	Left	Thru	Right	App. Total	Left	Thru	Right	App. Total	Left	Thru	Right	App. Total	Int. Total
Peak Hour Analysis From 12:00 PM to 01:45 PM - Peak 1 of 1																	
Peak Hour for Entire Intersection Begins at 12:00 PM																	
12:00 PM	0	295	38	333	106	0	**46**	152	0	325	67	392	0	0	0	0	877
12:15 PM	0	310	35	345	**120**	1	36	**157**	0	297	**88**	385	**1**	0	0	**1**	888
12:30 PM	0	**318**	**39**	**357**	92	**2**	29	123	**2**	**357**	71	**430**	0	0	**1**	1	**911**
12:45 PM	0	269	22	291	118	0	36	154	0	317	73	390	0	0	0	0	835
Total Volume	0	1192	134	1326	436	3	147	586	2	1296	299	1597	1	0	1	2	3511
% App. Total	0	89.9	10.1		74.4	0.5	25.1		0.1	81.2	18.7		50	0	50		
PHF	.000	.937	.859	.929	.908	.375	.799	.933	.250	.908	.849	.928	.250	.000	.250	.500	.964

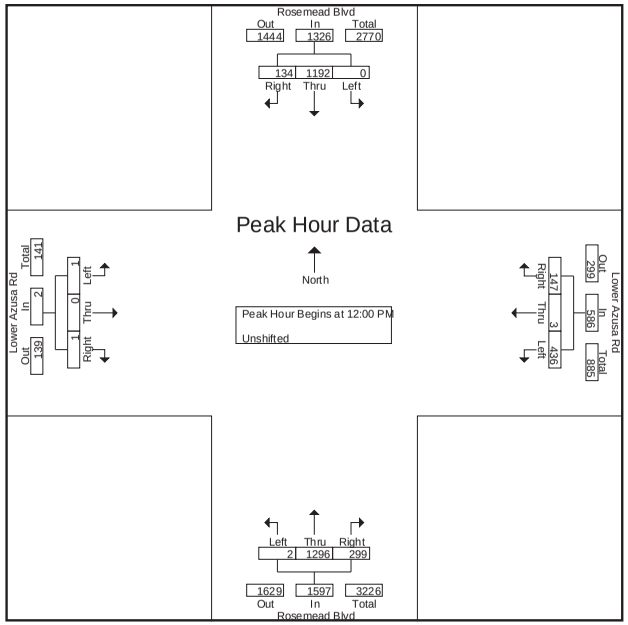

CITY TRAFFIC COUNTERS
626.991.7522
www.ctcounters.com

File Name : Rosemead_Rush
Site Code : 00000000
Start Date : 9/9/2014
Page No : 1

Groups Printed- Unshifted

	Rosemead Blvd Southbound			Rush St Westbound			Rosemead Blvd Northbound			Rush St Eastbound			
Start Time	Left	Thru	Right	Left	Thru	Right	Left	Thru	Right	Left	Thru	Right	Int. Total
07:00 AM	50	340	3	62	11	37	17	313	36	6	8	12	895
07:15 AM	63	377	2	71	14	40	26	411	50	5	24	15	1098
07:30 AM	78	374	2	86	25	41	39	408	58	7	13	13	1144
07:45 AM	93	351	3	80	39	54	29	399	58	3	22	17	1148
Total	284	1442	10	299	89	172	111	1531	202	21	67	57	4285
08:00 AM	125	349	3	64	37	41	40	420	71	11	28	19	1208
08:15 AM	115	342	4	75	42	57	40	392	67	6	17	9	1166
08:30 AM	114	359	5	83	37	48	17	369	66	6	14	6	1124
08:45 AM	116	325	5	79	28	72	23	356	63	6	12	12	1097
Total	470	1375	17	301	144	218	120	1537	267	29	71	46	4595
04:00 PM	83	379	2	108	11	52	35	327	59	3	25	30	1114
04:15 PM	102	393	6	124	26	63	25	317	52	14	45	34	1201
04:30 PM	97	432	4	121	30	74	25	337	62	8	45	27	1262
04:45 PM	95	439	6	117	29	72	13	305	58	16	36	21	1207
Total	377	1643	18	470	96	261	98	1286	231	41	151	112	4784
05:00 PM	118	427	7	114	16	71	16	290	46	14	40	36	1195
05:15 PM	111	463	1	104	9	72	23	334	53	11	42	24	1247
05:30 PM	76	455	3	87	21	51	20	311	64	7	26	21	1142
05:45 PM	86	375	2	85	17	55	15	289	51	5	48	27	1055
Total	391	1720	13	390	63	249	74	1224	214	37	156	108	4639
Grand Total	1522	6180	58	1460	392	900	403	5578	914	128	445	323	18303
Apprch %	19.6	79.6	0.7	53.1	14.2	32.7	5.8	80.9	13.3	14.3	49.7	36	
Total %	8.3	33.8	0.3	8	2.1	4.9	2.2	30.5	5	0.7	2.4	1.8	

CITY TRAFFIC COUNTERS
626.991.7522
www.ctcounters.com

File Name : Rosemead_Rush
Site Code : 00000000
Start Date : 9/9/2014
Page No : 2

	Rosemead Blvd Southbound				Rush St Westbound				Rosemead Blvd Northbound				Rush St Eastbound				
Start Time	Left	Thru	Right	App. Total	Left	Thru	Right	App. Total	Left	Thru	Right	App. Total	Left	Thru	Right	App. Total	Int. Total
Peak Hour Analysis From 07:00 AM to 11:45 AM - Peak 1 of 1																	
Peak Hour for Entire Intersection Begins at 07:30 AM																	
07:30 AM	78	**374**	2	454	**86**	25	41	152	39	408	58	505	7	13	13	33	1144
07:45 AM	93	351	3	447	80	39	54	173	29	399	58	486	3	22	17	42	1148
08:00 AM	**125**	349	3	**477**	64	37	41	142	**40**	**420**	**71**	**531**	**11**	**28**	**19**	**58**	**1208**
08:15 AM	115	342	**4**	461	75	**42**	**57**	**174**	40	392	67	499	6	17	9	32	1166
Total Volume	411	1416	12	1839	305	143	193	641	148	1619	254	2021	27	80	58	165	4666
% App. Total	22.3	77	0.7		47.6	22.3	30.1		7.3	80.1	12.6		16.4	48.5	35.2		
PHF	.822	.947	.750	.964	.887	.851	.846	.921	.925	.964	.894	.952	.614	.714	.763	.711	.966

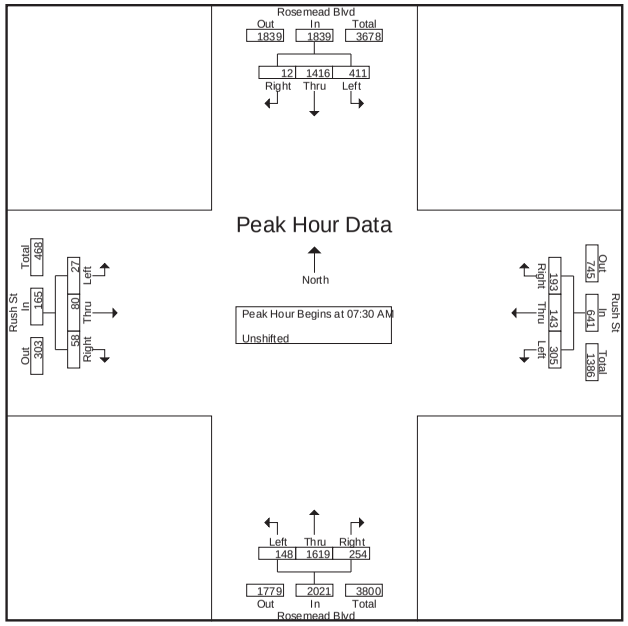

CITY TRAFFIC COUNTERS
626.991.7522
www.ctcounters.com

File Name : Rosemead_Rush
Site Code : 00000000
Start Date : 9/9/2014
Page No : 3

	Rosemead Blvd Southbound				Rush St Westbound				Rosemead Blvd Northbound				Rush St Eastbound				
Start Time	Left	Thru	Right	App. Total	Left	Thru	Right	App. Total	Left	Thru	Right	App. Total	Left	Thru	Right	App. Total	Int. Total
Peak Hour Analysis From 12:00 PM to 05:45 PM - Peak 1 of 1																	
Peak Hour for Entire Intersection Begins at 04:30 PM																	
04:30 PM	97	432	4	533	**121**	**30**	**74**	**225**	**25**	**337**	**62**	**424**	8	**45**	27	80	**1262**
04:45 PM	95	439	6	540	117	29	72	218	13	305	58	376	**16**	36	21	73	1207
05:00 PM	**118**	427	**7**	552	114	16	71	201	16	290	46	352	14	40	**36**	**90**	1195
05:15 PM	111	**463**	1	**575**	104	9	72	185	23	334	53	410	11	42	24	77	1247
Total Volume	421	1761	18	2200	456	84	289	829	77	1266	219	1562	49	163	108	320	4911
% App. Total	19.1	80	0.8		55	10.1	34.9		4.9	81	14		15.3	50.9	33.8		
PHF	.892	.951	.643	.957	.942	.700	.976	.921	.770	.939	.883	.921	.766	.906	.750	.889	.973

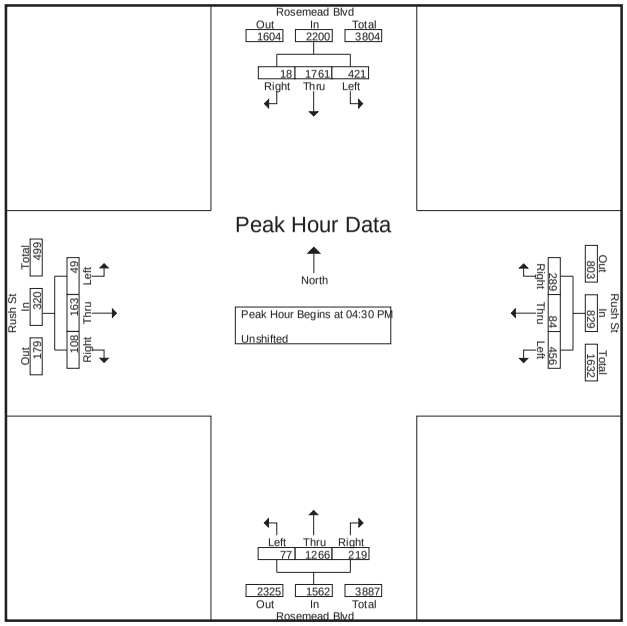

CITY TRAFFIC COUNTERS

626.991.7522

www.ctcounters.com

File Name : Rosemead_Rush_Sat
Site Code : 00000000
Start Date : 9/6/2014
Page No : 1

Groups Printed- Unshifted

	Rosemead Blvd Southbound			Rush St Westbound			Rosemead Blvd Northbound			Rush St Eastbound			
Start Time	Left	Thru	Right	Left	Thru	Right	Left	Thru	Right	Left	Thru	Right	Int. Total
12:00 PM	46	282	11	65	15	49	26	275	42	14	26	30	881
12:15 PM	48	291	9	75	13	44	35	296	46	14	17	36	924
12:30 PM	62	285	7	57	15	49	56	319	38	19	30	35	972
12:45 PM	45	290	2	46	13	50	33	304	38	6	22	24	873
Total	201	1148	29	243	56	192	150	1194	164	53	95	125	3650
01:00 PM	36	311	4	62	13	38	33	289	38	13	12	25	874
01:15 PM	50	340	3	44	9	46	33	285	39	7	13	17	886
01:30 PM	59	364	6	49	15	39	26	344	42	6	15	22	987
01:45 PM	38	270	3	63	8	50	30	311	38	7	10	23	851
Total	183	1285	16	218	45	173	122	1229	157	33	50	87	3598
Grand Total	384	2433	45	461	101	365	272	2423	321	86	145	212	7248
Apprch %	13.4	85	1.6	49.7	10.9	39.4	9	80.3	10.6	19.4	32.7	47.9	
Total %	5.3	33.6	0.6	6.4	1.4	5	3.8	33.4	4.4	1.2	2	2.9	

CITY TRAFFIC COUNTERS

626.991.7522

www.ctcounters.com

File Name : Rosemead_Rush_Sat
Site Code : 00000000
Start Date : 9/6/2014
Page No : 2

	Rosemead Blvd Southbound				Rush St Westbound				Rosemead Blvd Northbound				Rush St Eastbound				
Start Time	Left	Thru	Right	App. Total	Left	Thru	Right	App. Total	Left	Thru	Right	App. Total	Left	Thru	Right	App. Total	Int. Total
Peak Hour Analysis From 12:00 PM to 01:45 PM - Peak 1 of 1																	
Peak Hour for Entire Intersection Begins at 12:00 PM																	
12:00 PM	46	282	**11**	339	65	**15**	49	129	26	275	42	343	14	26	30	70	881
12:15 PM	48	**291**	9	348	**75**	13	44	**132**	35	296	**46**	377	14	17	**36**	67	924
12:30 PM	**62**	285	7	**354**	57	15	49	121	**56**	**319**	38	**413**	**19**	**30**	35	**84**	**972**
12:45 PM	45	290	2	337	46	13	**50**	109	33	304	38	375	6	22	24	52	873
Total Volume	201	1148	29	1378	243	56	192	491	150	1194	164	1508	53	95	125	273	3650
% App. Total	14.6	83.3	2.1		49.5	11.4	39.1		9.9	79.2	10.9		19.4	34.8	45.8		
PHF	.810	.986	.659	.973	.810	.933	.960	.930	.670	.936	.891	.913	.697	.792	.868	.813	.939

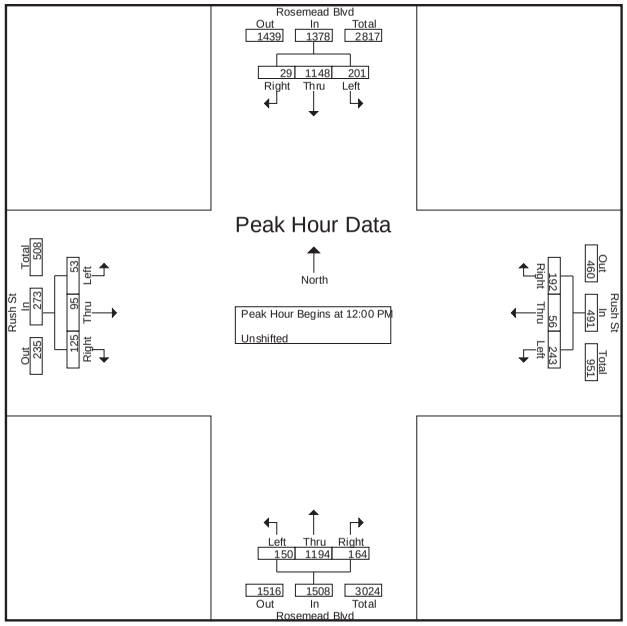

CITY TRAFFIC COUNTERS

626.991.7522

www.ctcounters.com

File Name : Balwin_Olive
Site Code : 00000000
Start Date : 9/16/2014
Page No : 1

Groups Printed- Unshifted

	Baldwin Ave Southbound			Olive St Westbound			Baldwin Ave Northbound			Olive St Eastbound			
Start Time	Left	Thru	Right	Left	Thru	Right	Left	Thru	Right	Left	Thru	Right	Int. Total
07:00 AM	10	77	8	1	11	13	0	85	0	4	5	1	215
07:15 AM	5	95	6	6	12	18	0	75	2	4	6	1	230
07:30 AM	7	111	4	1	16	22	3	118	3	9	7	1	302
07:45 AM	5	110	8	4	25	17	0	101	3	18	12	3	306
Total	27	393	26	12	64	70	3	379	8	35	30	6	1053
08:00 AM	10	161	8	5	28	25	10	146	2	14	20	10	439
08:15 AM	11	157	4	5	17	25	3	135	4	19	21	6	407
08:30 AM	12	143	6	1	14	10	5	87	2	9	11	3	303
08:45 AM	3	108	4	6	16	9	2	121	4	4	11	7	295
Total	36	569	22	17	75	69	20	489	12	46	63	26	1444
04:00 PM	10	142	6	0	6	15	5	138	8	11	15	4	360
04:15 PM	16	141	11	4	11	9	6	122	4	17	30	8	379
04:30 PM	14	137	7	2	6	12	5	126	5	11	16	8	349
04:45 PM	19	125	7	5	12	15	7	135	4	7	16	4	356
Total	59	545	31	11	35	51	23	521	21	46	77	24	1444
05:00 PM	14	131	7	1	14	18	7	138	6	9	34	10	389
05:15 PM	13	192	14	6	14	20	12	166	2	12	18	5	474
05:30 PM	16	171	5	1	10	12	1	176	2	7	25	10	436
05:45 PM	20	184	3	2	13	14	3	195	3	9	27	6	479
Total	63	678	29	10	51	64	23	675	13	37	104	31	1778
Grand Total	185	2185	108	50	225	254	69	2064	54	164	274	87	5719
Apprch %	7.5	88.2	4.4	9.5	42.5	48	3.2	94.4	2.5	31.2	52.2	16.6	
Total %	3.2	38.2	1.9	0.9	3.9	4.4	1.2	36.1	0.9	2.9	4.8	1.5	

CITY TRAFFIC COUNTERS

626.991.7522

www.ctcounters.com

File Name : Balwin_Olive
Site Code : 00000000
Start Date : 9/16/2014
Page No : 2

	Baldwin Ave Southbound				Olive St Westbound				Baldwin Ave Northbound				Olive St Eastbound				
Start Time	Left	Thru	Right	App. Total	Left	Thru	Right	App. Total	Left	Thru	Right	App. Total	Left	Thru	Right	App. Total	Int. Total
Peak Hour Analysis From 07:00 AM to 11:45 AM - Peak 1 of 1																	
Peak Hour for Entire Intersection Begins at 07:45 AM																	
07:45 AM	5	110	**8**	123	4	25	17	46	0	101	3	104	18	12	3	33	306
08:00 AM	10	**161**	8	**179**	**5**	**28**	**25**	**58**	**10**	**146**	2	**158**	14	20	**10**	44	**439**
08:15 AM	11	157	4	172	5	17	25	47	3	135	**4**	142	**19**	**21**	6	**46**	407
08:30 AM	**12**	143	6	161	1	14	10	25	5	87	2	94	9	11	3	23	303
Total Volume	38	571	26	635	15	84	77	176	18	469	11	498	60	64	22	146	1455
% App. Total	6	89.9	4.1		8.5	47.7	43.8		3.6	94.2	2.2		41.1	43.8	15.1		
PHF	.792	.887	.813	.887	.750	.750	.770	.759	.450	.803	.688	.788	.789	.762	.550	.793	.829

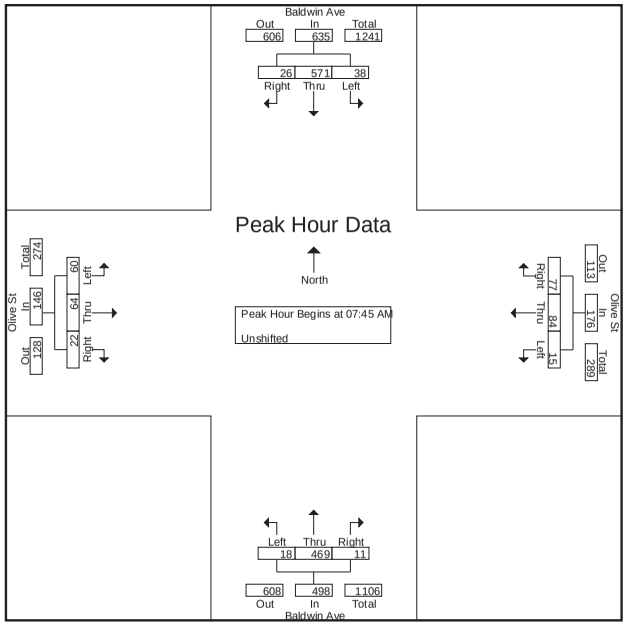

CITY TRAFFIC COUNTERS
626.991.7522
www.ctcounters.com

File Name : Balwin_Olive
Site Code : 00000000
Start Date : 9/16/2014
Page No : 3

	Baldwin Ave Southbound				Olive St Westbound				Baldwin Ave Northbound				Olive St Eastbound				
Start Time	Left	Thru	Right	App. Total	Left	Thru	Right	App. Total	Left	Thru	Right	App. Total	Left	Thru	Right	App. Total	Int. Total
Peak Hour Analysis From 12:00 PM to 05:45 PM - Peak 1 of 1																	
Peak Hour for Entire Intersection Begins at 05:00 PM																	
05:00 PM	14	131	7	152	1	**14**	18	33	7	138	**6**	151	9	**34**	**10**	**53**	389
05:15 PM	13	**192**	**14**	**219**	**6**	14	**20**	**40**	**12**	166	2	180	**12**	18	5	35	474
05:30 PM	16	171	5	192	1	10	12	23	1	176	2	179	7	25	10	42	436
05:45 PM	**20**	184	3	207	2	13	14	29	3	**195**	3	**201**	9	27	6	42	**479**
Total Volume	63	678	29	770	10	51	64	125	23	675	13	711	37	104	31	172	1778
% App. Total	8.2	88.1	3.8		8	40.8	51.2		3.2	94.9	1.8		21.5	60.5	18		
PHF	.788	.883	.518	.879	.417	.911	.800	.781	.479	.865	.542	.884	.771	.765	.775	.811	.928

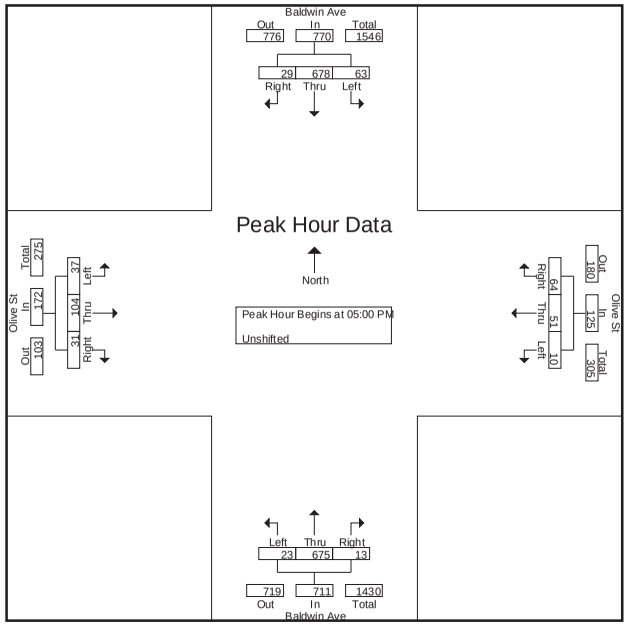

CITY TRAFFIC COUNTERS
626.991.7522
www.ctcounters.com

File Name : Baldwin_Olive_Sat
Site Code : 00000000
Start Date : 9/13/2014
Page No : 1

Groups Printed- Unshifted

	Baldwin Ave Southbound			Olive St Westbound			Baldwin Ave Northbound			Olive St Eastbound			
Start Time	Left	Thru	Right	Left	Thru	Right	Left	Thru	Right	Left	Thru	Right	Int. Total
12:00 PM	11	196	15	5	7	12	6	162	3	10	11	8	446
12:15 PM	14	173	8	5	10	18	4	163	5	24	14	11	449
12:30 PM	14	160	13	2	10	14	8	137	1	18	19	10	406
12:45 PM	23	170	10	9	14	23	3	156	7	15	8	5	443
Total	62	699	46	21	41	67	21	618	16	67	52	34	1744
01:00 PM	15	180	12	3	12	17	6	174	3	23	10	10	465
01:15 PM	9	176	8	3	7	14	5	150	3	15	6	5	401
01:30 PM	23	162	13	7	6	12	1	128	4	12	17	6	391
01:45 PM	20	148	16	6	9	8	3	166	2	20	9	6	413
Total	67	666	49	19	34	51	15	618	12	70	42	27	1670
Grand Total	129	1365	95	40	75	118	36	1236	28	137	94	61	3414
Apprch %	8.1	85.9	6	17.2	32.2	50.6	2.8	95.1	2.2	46.9	32.2	20.9	
Total %	3.8	40	2.8	1.2	2.2	3.5	1.1	36.2	0.8	4	2.8	1.8	

CITY TRAFFIC COUNTERS

626.991.7522

www.ctcounters.com

File Name : Baldwin_Olive_Sat
Site Code : 00000000
Start Date : 9/13/2014
Page No : 2

	Baldwin Ave Southbound				Olive St Westbound				Baldwin Ave Northbound				Olive St Eastbound				
Start Time	Left	Thru	Right	App. Total	Left	Thru	Right	App. Total	Left	Thru	Right	App. Total	Left	Thru	Right	App. Total	Int. Total
Peak Hour Analysis From 12:00 PM to 01:45 PM - Peak 1 of 1																	
Peak Hour for Entire Intersection Begins at 12:15 PM																	
12:15 PM	14	173	8	195	5	10	18	33	4	163	5	172	**24**	14	**11**	**49**	449
12:30 PM	14	160	**13**	187	2	10	14	26	**8**	137	1	146	18	**19**	10	47	406
12:45 PM	**23**	170	10	203	**9**	**14**	**23**	**46**	3	156	**7**	166	15	8	5	28	443
01:00 PM	15	**180**	12	**207**	3	12	17	32	6	**174**	3	**183**	23	10	10	43	**465**
Total Volume	66	683	43	792	19	46	72	137	21	630	16	667	80	51	36	167	1763
% App. Total	8.3	86.2	5.4		13.9	33.6	52.6		3.1	94.5	2.4		47.9	30.5	21.6		
PHF	.717	.949	.827	.957	.528	.821	.783	.745	.656	.905	.571	.911	.833	.671	.818	.852	.948

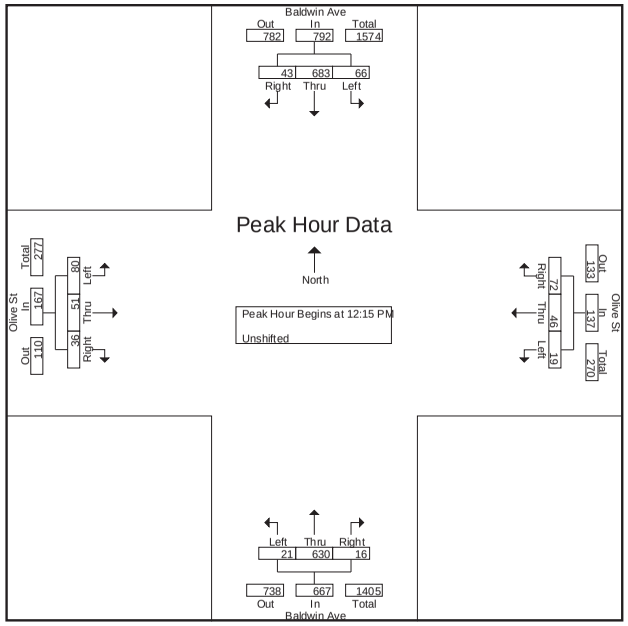

Counts Unlimited Inc.
PO Box 1178
Corona, CA 92878
(951) 268-6268

City of Temple City
N/S: Baldwin Avenue
E/W: Lower Azusa Road
Weather: Sunny

File Name : TPYBALAAM
Site Code : 00000014
Start Date : 9/13/2012
Page No : 1

Groups Printed- Total Volume

	Baldwin Avenue Southbound				Lower Azusa Road Westbound				Baldwin Avenue Northbound				Lower Azusa Road Eastbound				
Start Time	Left	Thru	Right	App. Total	Left	Thru	Right	App. Total	Left	Thru	Right	App. Total	Left	Thru	Right	App. Total	Int. Total
07:00 AM	23	116	26	165	37	197	35	269	16	70	19	105	14	56	10	80	619
07:15 AM	19	142	28	189	42	271	33	346	13	68	24	105	14	68	20	102	742
07:30 AM	21	149	37	207	45	255	18	318	21	112	46	179	19	98	18	135	839
07:45 AM	23	188	41	252	51	239	38	328	19	118	47	184	24	124	36	184	948
Total	86	595	132	813	175	962	124	1261	69	368	136	573	71	346	84	501	3148
08:00 AM	32	182	56	270	46	250	52	348	22	104	29	155	22	116	36	174	947
08:15 AM	36	227	59	322	59	267	31	357	35	137	38	210	19	109	29	157	1046
08:30 AM	21	174	56	251	34	253	28	315	18	104	36	158	27	128	22	177	901
08:45 AM	40	174	39	253	51	239	35	325	26	134	30	190	25	109	32	166	934
Total	129	757	210	1096	190	1009	146	1345	101	479	133	713	93	462	119	674	3828
Grand Total	215	1352	342	1909	365	1971	270	2606	170	847	269	1286	164	808	203	1175	6976
Apprch %	11.3	70.8	17.9		14	75.6	10.4		13.2	65.9	20.9		14	68.8	17.3		
Total %	3.1	19.4	4.9	27.4	5.2	28.3	3.9	37.4	2.4	12.1	3.9	18.4	2.4	11.6	2.9	16.8	

	Baldwin Avenue Southbound				Lower Azusa Road Westbound				Baldwin Avenue Northbound				Lower Azusa Road Eastbound				
Start Time	Left	Thru	Right	App. Total	Left	Thru	Right	App. Total	Left	Thru	Right	App. Total	Left	Thru	Right	App. Total	Int. Total
Peak Hour Analysis From 07:00 AM to 08:45 AM - Peak 1 of 1																	
Peak Hour for Entire Intersection Begins at 07:45 AM																	
07:45 AM	23	188	41	252	51	239	38	328	19	118	**47**	184	24	124	**36**	**184**	948
08:00 AM	32	182	56	270	46	250	**52**	348	22	104	29	155	22	116	36	174	947
08:15 AM	**36**	**227**	**59**	**322**	**59**	**267**	31	**357**	**35**	**137**	38	**210**	19	109	29	157	**1046**
08:30 AM	21	174	56	251	34	253	28	315	18	104	36	158	**27**	**128**	22	177	901
Total Volume	112	771	212	1095	190	1009	149	1348	94	463	150	707	92	477	123	692	3842
% App. Total	10.2	70.4	19.4		14.1	74.9	11.1		13.3	65.5	21.2		13.3	68.9	17.8		
PHF	.778	.849	.898	.850	.805	.945	.716	.944	.671	.845	.798	.842	.852	.932	.854	.940	.918

Counts Unlimited Inc.
PO Box 1178
Corona, CA 92878
(951) 268-6268

City of Temple City
N/S: Baldwin Avenue
E/W: Lower Azusa Road
Weather: Sunny

File Name : TPYBALAAM
Site Code : 00000014
Start Date : 9/13/2012
Page No : 2

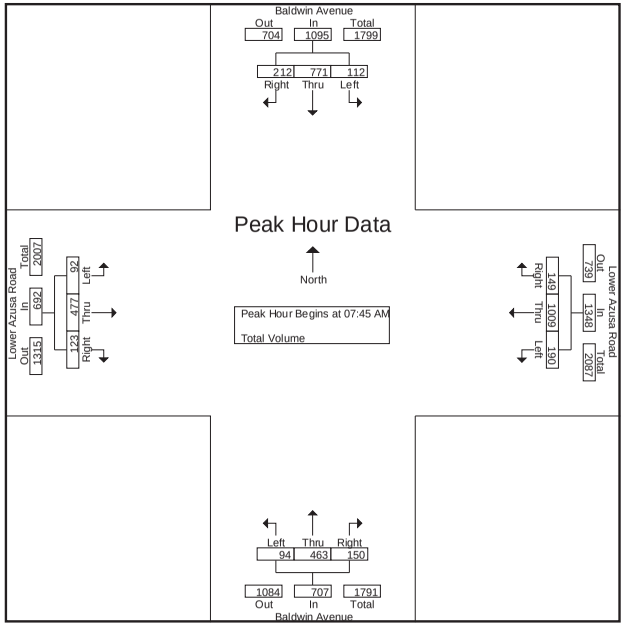

Peak Hour Analysis From 07:00 AM to 08:45 AM - Peak 1 of 1

Peak Hour for Each Approach Begins at:

	08:00 AM				07:30 AM				07:30 AM				07:45 AM			
+0 mins.	32	182	56	270	45	255	18	318	21	112	46	179	24	124	**36**	**184**
+15 mins.	36	**227**	**59**	**322**	51	239	38	328	19	118	**47**	184	22	116	36	174
+30 mins.	21	174	56	251	46	250	**52**	348	22	104	29	155	19	109	29	157
+45 mins.	**40**	174	39	253	**59**	**267**	31	**357**	**35**	**137**	38	**210**	**27**	**128**	22	177
Total Volume	129	757	210	1096	201	1011	139	1351	97	471	160	728	92	477	123	692
% App. Total	11.8	69.1	19.2		14.9	74.8	10.3		13.3	64.7	22		13.3	68.9	17.8	
PHF	.806	.834	.890	.851	.852	.947	.668	.946	.693	.859	.851	.867	.852	.932	.854	.940

Counts Unlimited Inc.
PO Box 1178
Corona, CA 92878
(951) 268-6268

City of Temple City
N/S: Baldwin Avenue
E/W: Lower Azusa Road
Weather: Sunny

File Name : TPYBALAPM
Site Code : 00000014
Start Date : 9/13/2012
Page No : 1

Groups Printed- Total Volume

	Baldwin Avenue Southbound				Lower Azusa Road Westbound				Baldwin Avenue Northbound				Lower Azusa Road Eastbound				
Start Time	Left	Thru	Right	App. Total	Left	Thru	Right	App. Total	Left	Thru	Right	App. Total	Left	Thru	Right	App. Total	Int. Total
04:00 PM	31	103	30	164	47	113	27	187	23	184	105	312	31	188	21	240	903
04:15 PM	34	137	37	208	48	131	25	204	21	182	107	310	32	189	21	242	964
04:30 PM	41	123	43	207	34	128	38	200	20	148	65	233	46	131	26	203	843
04:45 PM	36	106	46	188	21	108	42	171	25	208	63	296	41	200	26	267	922
Total	142	469	156	767	150	480	132	762	89	722	340	1151	150	708	94	952	3632
05:00 PM	40	134	39	213	29	160	39	228	20	192	64	276	61	161	17	239	956
05:15 PM	36	125	32	193	33	188	30	251	24	223	57	304	50	179	16	245	993
05:30 PM	45	118	21	184	27	128	36	191	14	213	64	291	48	183	10	241	907
05:45 PM	50	115	39	204	33	137	43	213	22	219	70	311	55	201	13	269	997
Total	171	492	131	794	122	613	148	883	80	847	255	1182	214	724	56	994	3853
Grand Total	313	961	287	1561	272	1093	280	1645	169	1569	595	2333	364	1432	150	1946	7485
Apprch %	20.1	61.6	18.4		16.5	66.4	17		7.2	67.3	25.5		18.7	73.6	7.7		
Total %	4.2	12.8	3.8	20.9	3.6	14.6	3.7	22	2.3	21	7.9	31.2	4.9	19.1	2	26	

	Baldwin Avenue Southbound				Lower Azusa Road Westbound				Baldwin Avenue Northbound				Lower Azusa Road Eastbound				
Start Time	Left	Thru	Right	App. Total	Left	Thru	Right	App. Total	Left	Thru	Right	App. Total	Left	Thru	Right	App. Total	Int. Total
Peak Hour Analysis From 04:00 PM to 05:45 PM - Peak 1 of 1																	
Peak Hour for Entire Intersection Begins at 05:00 PM																	
05:00 PM	40	**134**	**39**	**213**	29	160	39	228	20	192	64	276	**61**	161	**17**	239	956
05:15 PM	36	125	32	193	**33**	**188**	30	**251**	**24**	**223**	57	304	50	179	16	245	993
05:30 PM	45	118	21	184	27	128	36	191	14	213	64	291	48	183	10	241	907
05:45 PM	**50**	115	39	204	33	137	**43**	213	22	219	**70**	**311**	55	**201**	13	**269**	**997**
Total Volume	171	492	131	794	122	613	148	883	80	847	255	1182	214	724	56	994	3853
% App. Total	21.5	62	16.5		13.8	69.4	16.8		6.8	71.7	21.6		21.5	72.8	5.6		
PHF	.855	.918	.840	.932	.924	.815	.860	.879	.833	.950	.911	.950	.877	.900	.824	.924	.966

Counts Unlimited Inc.
PO Box 1178
Corona, CA 92878
(951) 268-6268

City of Temple City
N/S: Baldwin Avenue
E/W: Lower Azusa Road
Weather: Sunny

File Name : TPYBALAPM
Site Code : 00000014
Start Date : 9/13/2012
Page No : 2

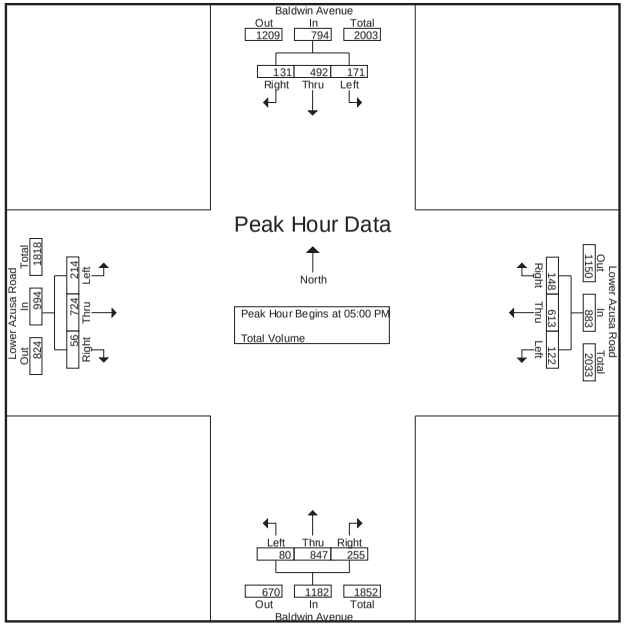

Peak Hour Analysis From 04:00 PM to 05:45 PM - Peak 1 of 1

Peak Hour for Each Approach Begins at:

	04:15 PM				05:00 PM				05:00 PM				05:00 PM			
+0 mins.	34	**137**	37	208	29	160	39	228	20	192	64	276	**61**	161	**17**	239
+15 mins.	**41**	123	43	207	**33**	**188**	30	**251**	**24**	**223**	57	304	50	179	16	245
+30 mins.	36	106	**46**	188	27	128	36	191	14	213	64	291	48	183	10	241
+45 mins.	40	134	39	**213**	33	137	**43**	213	22	219	**70**	**311**	55	**201**	13	**269**
Total Volume	151	500	165	816	122	613	148	883	80	847	255	1182	214	724	56	994
% App. Total	18.5	61.3	20.2		13.8	69.4	16.8		6.8	71.7	21.6		21.5	72.8	5.6	
PHF	.921	.912	.897	.958	.924	.815	.860	.879	.833	.950	.911	.950	.877	.900	.824	.924

Counts Unlimited Inc.
PO Box 1178
Corona, CA 92878
(951) 268-6268

City of Temple City
N/S: Baldwin Avenue
E/W: Lower Azusa Road
Sunny: Sunny

File Name : TPYBALASAT
Site Code : 00000066
Start Date : 9/15/2012
Page No : 1

Groups Printed- Total Volume

	Baldwin Avenue Southbound				Lower Azusa Road Westbound				Baldwin Avenue Northbound				Lower Azusa Road Eastbound				
Start Time	Left	Thru	Right	App. Total	Left	Thru	Right	App. Total	Left	Thru	Right	App. Total	Left	Thru	Right	App. Total	Int. Total
12:00 PM	41	126	47	214	43	161	32	236	17	167	47	231	49	151	31	231	912
12:15 PM	27	145	45	217	26	148	50	224	24	161	42	227	42	153	30	225	893
12:30 PM	37	145	38	220	29	140	33	202	23	160	33	216	33	136	26	195	833
12:45 PM	44	157	41	242	35	124	35	194	20	187	43	250	45	150	25	220	906
Total	149	573	171	893	133	573	150	856	84	675	165	924	169	590	112	871	3544
01:00 PM	42	127	40	209	29	148	35	212	26	138	34	198	40	132	26	198	817
01:15 PM	44	153	38	235	27	145	35	207	23	157	34	214	45	149	26	220	876
01:30 PM	28	130	37	195	34	132	34	200	23	156	26	205	47	117	35	199	799
01:45 PM	38	126	29	193	30	133	36	199	15	158	29	202	35	158	28	221	815
Total	152	536	144	832	120	558	140	818	87	609	123	819	167	556	115	838	3307
Grand Total	301	1109	315	1725	253	1131	290	1674	171	1284	288	1743	336	1146	227	1709	6851
Apprch %	17.4	64.3	18.3		15.1	67.6	17.3		9.8	73.7	16.5		19.7	67.1	13.3		
Total %	4.4	16.2	4.6	25.2	3.7	16.5	4.2	24.4	2.5	18.7	4.2	25.4	4.9	16.7	3.3	24.9	

	Baldwin Avenue Southbound				Lower Azusa Road Westbound				Baldwin Avenue Northbound				Lower Azusa Road Eastbound				
Start Time	Left	Thru	Right	App. Total	Left	Thru	Right	App. Total	Left	Thru	Right	App. Total	Left	Thru	Right	App. Total	Int. Total
Peak Hour Analysis From 12:00 PM to 01:45 PM - Peak 1 of 1																	
Peak Hour for Entire Intersection Begins at 12:00 PM																	
12:00 PM	41	126	**47**	214	**43**	**161**	32	**236**	17	167	**47**	231	**49**	151	**31**	**231**	**912**
12:15 PM	27	145	45	217	26	148	**50**	224	**24**	161	42	227	42	**153**	30	225	893
12:30 PM	37	145	38	220	29	140	33	202	23	160	33	216	33	136	26	195	833
12:45 PM	**44**	**157**	41	**242**	35	124	35	194	20	**187**	43	**250**	45	150	25	220	906
Total Volume	149	573	171	893	133	573	150	856	84	675	165	924	169	590	112	871	3544
% App. Total	16.7	64.2	19.1		15.5	66.9	17.5		9.1	73.1	17.9		19.4	67.7	12.9		
PHF	.847	.912	.910	.923	.773	.890	.750	.907	.875	.902	.878	.924	.862	.964	.903	.943	.971

Counts Unlimited Inc.
PO Box 1178
Corona, CA 92878
(951) 268-6268

City of Temple City
N/S: Baldwin Avenue
E/W: Lower Azusa Road
Sunny: Sunny

File Name : TPYBALASAT
Site Code : 00000066
Start Date : 9/15/2012
Page No : 2

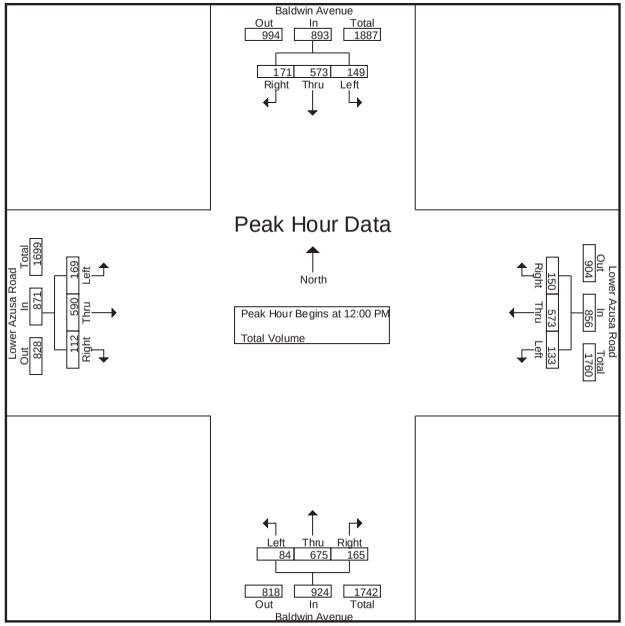

Peak Hour Analysis From 12:00 PM to 01:45 PM - Peak 1 of 1

Peak Hour for Each Approach Begins at:

	12:30 PM				12:00 PM				12:00 PM				12:00 PM			
+0 mins.	37	145	38	220	**43**	**161**	32	**236**	17	167	**47**	231	**49**	151	**31**	**231**
+15 mins.	**44**	**157**	**41**	**242**	26	148	**50**	224	**24**	161	42	227	42	**153**	30	225
+30 mins.	42	127	40	209	29	140	33	202	23	160	33	216	33	136	26	195
+45 mins.	44	153	38	235	35	124	35	194	20	**187**	43	**250**	45	150	25	220
Total Volume	167	582	157	906	133	573	150	856	84	675	165	924	169	590	112	871
% App. Total	18.4	64.2	17.3		15.5	66.9	17.5		9.1	73.1	17.9		19.4	67.7	12.9	
PHF	.949	.927	.957	.936	.773	.890	.750	.907	.875	.902	.878	.924	.862	.964	.903	.943

CITY TRAFFIC COUNTERS

626.991.7522

www.ctcounters.com

File Name : Gilman_Ramona
Site Code : 00000000
Start Date : 9/9/2014
Page No : 1

Groups Printed- Unshifted

	Gilman Rd Southbound			Ramona Blvd Westbound			Gilman Rd Northbound			Ramona Blvd Eastbound			
Start Time	Left	Thru	Right	Left	Thru	Right	Left	Thru	Right	Left	Thru	Right	Int. Total
07:00 AM	0	0	0	11	216	1	2	0	15	5	149	8	407
07:15 AM	0	0	0	31	250	9	17	3	26	8	140	6	490
07:30 AM	0	0	0	52	266	7	19	1	23	17	182	19	586
07:45 AM	0	0	0	34	254	13	22	2	32	34	164	32	587
Total	0	0	0	128	986	30	60	6	96	64	635	65	2070
08:00 AM	0	0	0	36	244	3	23	0	22	39	189	19	575
08:15 AM	0	0	0	15	190	7	8	3	18	5	135	7	388
08:30 AM	0	0	0	19	207	2	10	1	18	2	135	7	401
08:45 AM	0	0	0	26	206	1	3	1	15	7	134	3	396
Total	0	0	0	96	847	13	44	5	73	53	593	36	1760
04:00 PM	0	0	0	13	151	2	6	0	23	0	257	6	458
04:15 PM	0	0	0	18	150	0	5	0	44	0	240	2	459
04:30 PM	0	0	0	15	162	0	12	0	48	0	256	10	503
04:45 PM	0	0	0	24	120	0	7	0	32	2	254	11	450
Total	0	0	0	70	583	2	30	0	147	2	1007	29	1870
05:00 PM	0	0	0	17	174	1	8	0	62	1	240	8	511
05:15 PM	0	0	0	24	173	0	3	0	58	0	222	9	489
05:30 PM	0	0	0	15	159	0	8	0	46	0	199	9	436
05:45 PM	0	0	0	15	144	1	11	0	91	1	185	5	453
Total	0	0	0	71	650	2	30	0	257	2	846	31	1889
Grand Total	0	0	0	365	3066	47	164	11	573	121	3081	161	7589
Apprch %	0	0	0	10.5	88.2	1.4	21.9	1.5	76.6	3.6	91.6	4.8	
Total %	0	0	0	4.8	40.4	0.6	2.2	0.1	7.6	1.6	40.6	2.1	

CITY TRAFFIC COUNTERS

626.991.7522

www.ctcounters.com

File Name : Gilman_Ramona
Site Code : 00000000
Start Date : 9/9/2014
Page No : 2

	Gilman Rd Southbound				Ramona Blvd Westbound				Gilman Rd Northbound				Ramona Blvd Eastbound				
Start Time	Left	Thru	Right	App. Total	Left	Thru	Right	App. Total	Left	Thru	Right	App. Total	Left	Thru	Right	App. Total	Int. Total
Peak Hour Analysis From 07:00 AM to 11:45 AM - Peak 1 of 1																	
Peak Hour for Entire Intersection Begins at 07:15 AM																	
07:15 AM	0	0	0	0	31	250	9	290	17	**3**	26	46	8	140	6	154	490
07:30 AM	0	0	0	0	**52**	**266**	7	**325**	19	1	23	43	17	182	19	218	586
07:45 AM	0	0	0	0	34	254	**13**	301	22	2	**32**	**56**	34	164	**32**	230	**587**
08:00 AM	0	0	0	0	36	244	3	283	**23**	0	22	45	**39**	**189**	19	**247**	575
Total Volume	0	0	0	0	153	1014	32	1199	81	6	103	190	98	675	76	849	2238
% App. Total	0	0	0		12.8	84.6	2.7		42.6	3.2	54.2		11.5	79.5	9		
PHF	.000	.000	.000	.000	.736	.953	.615	.922	.880	.500	.805	.848	.628	.893	.594	.859	.953

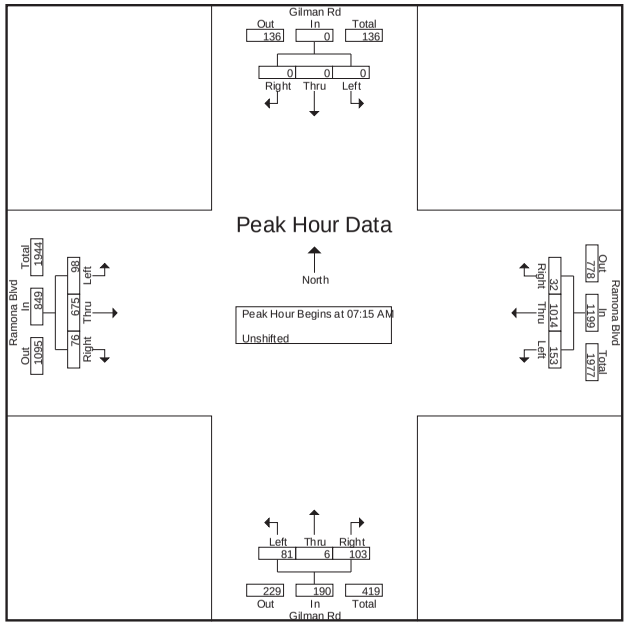

CITY TRAFFIC COUNTERS

626.991.7522

www.ctcounters.com

File Name : Gilman_Ramona
Site Code : 00000000
Start Date : 9/9/2014
Page No : 3

	Gilman Rd Southbound				Ramona Blvd Westbound				Gilman Rd Northbound				Ramona Blvd Eastbound				
Start Time	Left	Thru	Right	App. Total	Left	Thru	Right	App. Total	Left	Thru	Right	App. Total	Left	Thru	Right	App. Total	Int. Total
Peak Hour Analysis From 12:00 PM to 05:45 PM - Peak 1 of 1																	
Peak Hour for Entire Intersection Begins at 04:30 PM																	
04:30 PM	0	0	0	0	15	162	0	177	**12**	0	48	60	0	**256**	10	266	503
04:45 PM	0	0	0	0	**24**	120	0	144	7	0	32	39	**2**	254	**11**	**267**	450
05:00 PM	0	0	0	0	17	**174**	**1**	192	8	0	**62**	**70**	1	240	8	249	**511**
05:15 PM	0	0	0	0	24	173	0	**197**	3	0	58	61	0	222	9	231	489
Total Volume	0	0	0	0	80	629	1	710	30	0	200	230	3	972	38	1013	1953
% App. Total	0	0	0		11.3	88.6	0.1		13	0	87		0.3	96	3.8		
PHF	.000	.000	.000	.000	.833	.904	.250	.901	.625	.000	.806	.821	.375	.949	.864	.949	.955

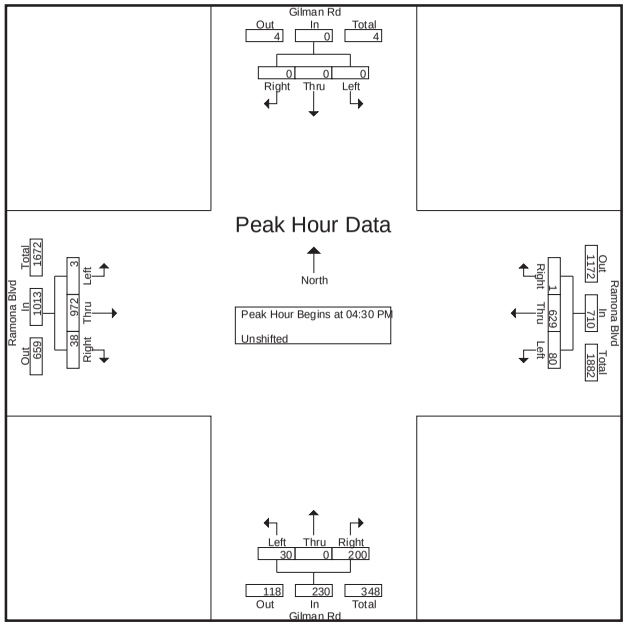

CITY TRAFFIC COUNTERS

626.991.7522

www.ctcounters.com

File Name : Gilman_Ramona_Sat
Site Code : 00000000
Start Date : 9/6/2014
Page No : 1

Groups Printed- Unshifted

	Gilman Rd Southbound			Ramona Blvd Westbound			Gilman Rd Northbound			Ramona Blvd Eastbound			
Start Time	Left	Thru	Right	Left	Thru	Right	Left	Thru	Right	Left	Thru	Right	Int. Total
12:00 PM	0	0	0	13	154	0	2	0	18	0	165	13	365
12:15 PM	0	0	0	20	148	0	7	0	24	0	197	6	402
12:30 PM	0	0	0	23	155	0	9	0	22	0	195	14	418
12:45 PM	0	0	0	13	188	0	6	0	21	0	235	3	466
Total	0	0	0	69	645	0	24	0	85	0	792	36	1651
01:00 PM	0	0	0	18	174	0	4	0	17	0	281	4	498
01:15 PM	0	0	0	15	192	0	4	0	13	0	391	7	622
01:30 PM	0	0	0	15	183	0	2	0	28	0	266	11	505
01:45 PM	0	0	0	18	169	0	5	0	23	0	190	8	413
Total	0	0	0	66	718	0	15	0	81	0	1128	30	2038
Grand Total	0	0	0	135	1363	0	39	0	166	0	1920	66	3689
Apprch %	0	0	0	9	91	0	19	0	81	0	96.7	3.3	
Total %	0	0	0	3.7	36.9	0	1.1	0	4.5	0	52	1.8	

CITY TRAFFIC COUNTERS

626.991.7522

www.ctcounters.com

File Name : Gilman_Ramona_Sat
Site Code : 00000000
Start Date : 9/6/2014
Page No : 2

	Gilman Rd Southbound				Ramona Blvd Westbound				Gilman Rd Northbound				Ramona Blvd Eastbound				
Start Time	Left	Thru	Right	App. Total	Left	Thru	Right	App. Total	Left	Thru	Right	App. Total	Left	Thru	Right	App. Total	Int. Total
Peak Hour Analysis From 12:00 PM to 01:45 PM - Peak 1 of 1																	
Peak Hour for Entire Intersection Begins at 12:45 PM																	
12:45 PM	0	0	0	0	13	188	0	201	**6**	0	21	27	0	235	3	238	466
01:00 PM	0	0	0	0	**18**	174	0	192	4	0	17	21	0	281	4	285	498
01:15 PM	0	0	0	0	15	**192**	0	**207**	4	0	13	17	0	**391**	7	**398**	**622**
01:30 PM	0	0	0	0	15	183	0	198	2	0	**28**	**30**	0	266	**11**	277	505
Total Volume	0	0	0	0	61	737	0	798	16	0	79	95	0	1173	25	1198	2091
% App. Total	0	0	0		7.6	92.4	0		16.8	0	83.2		0	97.9	2.1		
PHF	.000	.000	.000	.000	.847	.960	.000	.964	.667	.000	.705	.792	.000	.750	.568	.753	.840

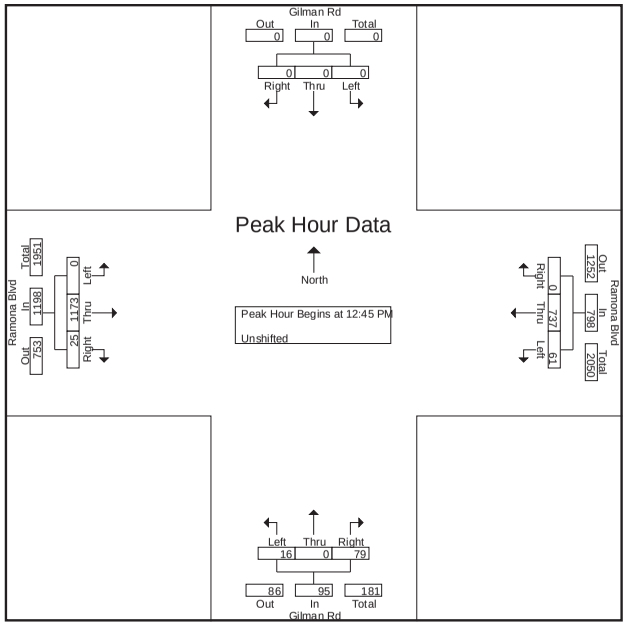

APPENDIX B

ICU AND LEVELS OF SERVICE EXPLANATION
HCM AND LEVELS OF SERVICE EXPLANATION
INTERSECTION LEVELS OF SERVICE DATA WORKSHEETS – WEEKDAY AM, PM AND SATURDAY MID-DAY PEAK HOURS

INTERSECTION CAPACITY UTILIZATION (ICU) DESCRIPTION

Level of Service is a term used to describe prevailing conditions and their effect on traffic. Broadly interpreted, the Levels of Service concept denotes any one of a number of differing combinations of operating conditions which may occur as a roadway is accommodating various traffic volumes. Level of Service is a qualitative measure of the effect of such factors as travel speed, travel time, traffic interruptions, freedom to maneuver, safety, driving comfort and convenience.

Six Levels of Service, A through F, have been defined in the 1965 *Highway Capacity Manual*, published by the Transportation Research Board. Level of Service A describes a condition of free flow, with low traffic volumes and relatively high speeds, while Level of Service F describes forced traffic flow at low speeds with jammed conditions and queues which cannot clear during the green phases.

The Intersection Capacity Utilization (ICU) method of intersection capacity analysis has been used in our studies. It directly relates traffic demand and available capacity for key intersection movements, regardless of present signal timing, The capacity per hour of green time for each approach is calculated based on the methods of the *Highway Capacity Manual*. The proportion of total signal time needed by each key movement is determined and compared to the total time available (100 percent of the hour). The result of summing the requirements of the conflicting key movements plus an allowance for clearance times is expressed as a decimal fraction. Conflicting key traffic movements are those opposing movements whose combined green time requirements are greatest.

The resulting ICU represents the proportion of the total hour required to accommodate intersection demand volumes if the key conflicting traffic movements are operating at capacity. Other movements may be operating near capacity, or may be operating at significantly better levels. The ICU may be translated to a Level of Service as tabulated below.

The Levels of Service (abbreviated from the *Highway Capacity Manual*) are listed here with their corresponding ICU and Load Factor equivalents. Load Factor is that proportion of the signal cycles during the peak hour which are fully loaded; i.e. when all of the vehicles waiting at the beginning of green are not able to clear on that green phase.

Intersection Capacity Utilization Characteristics

Level of Service	Load Factor	Equivalent ICU
A	0.0	0.00 - 0.60
B	0.0 - 0.1	0.61 - 0.70
C	0.1 - 0.3	0.71 - 0.80
D	0.3 - 0.7	0.81 - 0.90
E	0.7 - 1.0	0.91 - 1.00
F	Not Applicable	Not Applicable

SERVICE LEVEL A
There are no loaded cycles and few are even close to loaded at this service level. No approach phase is fully utilized by traffic and no vehicle waits longer than one red indication.

SERVICE LEVEL B
This level represents stable operation where an occasional approach phase is fully utilized and a substantial number are approaching full use. Many drivers begin to feel restricted within platoons of vehicles.

SERVICE LEVEL C
At this level stable operation continues. Loading is still intermittent but more frequent than at Level B. Occasionally drivers may have to wait through more than one red signal indication and backups may develop behind turning vehicles. Most drivers feel somewhat restricted, but not objectionably so.

SERVICE LEVEL D
This level encompasses a zone of increasing restriction approaching instability at the intersection. Delays to approaching vehicles may be substantial during short peaks within the peak hour, but enough cycles with lower demand occur to permit periodic clearance of queues, thus preventing excessive backups. Drivers frequently have to wait through more than one red signal. This level is the lower limit of acceptable operation to most drivers.

SERVICE LEVEL E
This represents near capacity and capacity operation. At capacity (ICU = 1.0) it represents the most vehicles that the particular intersection can accommodate. However, full utilization of every signal cycle is seldom attained no matter how great the demand. At this level all drivers wait through more than one red signal, and frequently through several.

SERVICE LEVEL F
Jammed conditions. Traffic backed up from a downstream location on one of the street restricts or prevents movement of traffic through the intersection under consideration.

LEVEL OF SERVICE FOR UNSIGNALIZED INTERSECTIONS

In the *Highway Capacity Manual (HCM)*, published by the Transportation Research Board, 2000, level of service for unsignalized intersections is defined in terms of delay, which is a measure of driver discomfort, frustration, fuel consumption, and lost travel time. The delay experienced by a motorist is made up of a number of factors that relate to control, geometrics, traffic, and incidents. Total delay is the difference between the travel time actually experienced and the reference travel time that would result during base conditions, in the absence of incidents, control, traffic, or geometric delay. Only the portion of total delay attributed to the traffic control measures, either traffic signals or stop signs, is quantified. This delay is called *control delay*. Control delay includes initial deceleration delay, queue move-up time, stopped delay, and final acceleration delay.

Level of Service criteria for unsignalized intersections are stated in terms of the average control delay per vehicle. The level of service is determined by the computed or measured control delay and is defined for each minor movement. Average control delay for any particular minor movement is a function of the service time for the approach and the degree of utilization. (Level of service is not defined for the intersection as a whole for two-way stop controlled intersections.)

Level of Service Criteria for TWSC/AWSC Intersections

Level of Service	Average Control Delay (Sec/Veh)
A	≤ 10
B	> 10 and ≤ 15
C	> 15 and ≤ 25
D	> 25 and ≤ 35
E	> 35 and ≤ 50
F	> 50

Level of Service (LOS) values are used to describe intersection operations with service levels varying from LOS A (free flow) to LOS F (jammed condition). The following descriptions summarize *HCM* criteria for each level of service:

LOS A describes operations with very low control delay, up to 10 seconds per vehicle.

LOS B describes operations with control delay greater than 10 and up to 15 seconds per vehicle.

LOS C describes operations with control delay greater than 15 and up to 25 seconds per vehicle.

LOS D describes operations with control delay greater than 25 and up to 35 seconds per vehicle.

LOS E describes operations with control delay greater than 35 and up to 50 seconds per vehicle.

LOS F describes operations with control delay in excess of 50 seconds per vehicle. For two-way stop controlled intersections, LOS F exists when there are insufficient gaps of suitable size to allow side-street demand to safely cross through a major-street traffic stream. This level of service is generally evident from extremely long control delays experienced by side-street traffic and by queuing on the minor-street approaches.

LINSCOTT, LAW & GREENSPAN, ENGINEERS
600 S. Lake Avenue, Suite 500, Pasadena CA 91106
(626) 796.2322 Fax (626) 792-0941

INTERSECTION CAPACITY UTILIZATION

San Gabriel Boulevard @ Valley Boulevard
Peak hr: AM
Annual Growth: 0.82%

Phase I

N-S St: San Gabriel Boulevard
E-W St: Valley Boulevard
Project: Flair Spectrum Project/1-14-4074-1
File: ICU1

Date: 09/15/2014
Date of Count: 2014
Projection Year: 2016

	2014 EXIST. TRAFFIC			2014 EXISTING WITH PROJECT				2014 EXIST. W/PROJECT + MITIGATION				2016 FUTURE WITHOUT PROJECT				2016 FUTURE WITH PROJECT				2016 FUTURE W/PROJECT + MITIGATION			
	1	2	V/C	Added	Total	2	V/C	Added	Total	2	V/C	Added	Total	2	V/C	Added	Total	2	V/C	Added	Total	2	V/C
Movement	Volume	Capacity	Ratio	Volume	Volume	Capacity	Ratio	Volume	Volume	Capacity	Ratio	Volume	Volume	Capacity	Ratio	Volume	Volume	Capacity	Ratio	Volume	Volume	Capacity	Ratio
Nb Left	131	1600	0.082 *	0	131	1600	0.082 *	0	131	1600	0.082 *	147	278	1600	0.174 *	0	278	1600	0.174 *	0	278	1600	0.174 *
Nb Thru	591	3200	0.215	0	591	3200	0.215	0	591	3200	0.215	56	647	3200	0.233	0	647	3200	0.233	0	647	3200	0.233
Nb Right	96	0	-	0	96	0	-	0	96	0	-	2	98	0	-	0	98	0	-	0	98	0	-
Sb Left	86	1600	0.054	3	89	1600	0.056	0	89	1600	0.056	15	101	1600	0.063	3	104	1600	0.065	0	104	1600	0.065
Sb Thru	761	3200	0.288 *	0	761	3200	0.288 *	0	761	3200	0.288 *	83	844	3200	0.336 *	0	844	3200	0.336 *	0	844	3200	0.336 *
Sb Right	159	0	-	0	159	0	-	0	159	0	-	74	233	0	-	0	233	0	-	0	233	0	-
Eb Left	81	1600	0.051 *	0	81	1600	0.051 *	0	81	1600	0.051 *	61	142	1600	0.089 *	0	142	1600	0.089 *	0	142	1600	0.089 *
Eb Thru	387	3200	0.121	5	392	3200	0.123	0	392	3200	0.123	117	504	3200	0.158	5	509	3200	0.159	0	509	3200	0.159
Eb Right	75	1600	0.047	0	75	1600	0.047	0	75	1600	0.047	132	207	1600	0.130	0	207	1600	0.130	0	207	1600	0.130
Wb Left	177	1600	0.111	0	177	1600	0.111	0	177	1600	0.111	3	180	1600	0.112	0	180	1600	0.112	0	180	1600	0.112
Wb Thru	890	4800	0.198 *	2	892	4800	0.198 *	0	892	4800	0.198 *	136	1026	4800	0.227 *	2	1028	4800	0.228 *	0	1028	4800	0.228 *
Wb Right	58	0	-	1	59	0	-	0	59	0	-	7	65	0	-	1	66	0	-	0	66	0	-
Yellow Allowance:			0.100 *				0.100 *				0.100 *				0.100 *				0.100 *				0.100 *
ICU			0.718				0.718				0.718				0.926				0.927				0.927
LOS			C				C				C				E				E				E

** Key conflicting movement as a part of ICU*
1 Counts conducted by: City Traffic Counters
2 Capacity expressed in veh/hour of green

LINSCOTT, LAW & GREENSPAN, ENGINEERS
600 S. Lake Avenue, Suite 500, Pasadena CA 91106
(626) 796.2322 Fax (626) 792-0941

INTERSECTION CAPACITY UTILIZATION

San Gabriel Boulevard @ Valley Boulevard
Peak hr: PM
Annual Growth: 0.82%

Phase I

N-S St: San Gabriel Boulevard
E-W St: Valley Boulevard
Project: Flair Spectrum Project/1-14-4074-1
File: ICU1

Date: 09/15/2014
Date of Count: 2014
Projection Year: 2016

	2014 EXIST. TRAFFIC			2014 EXISTING WITH PROJECT				2014 EXIST. W/PROJECT + MITIGATION				2016 FUTURE WITHOUT PROJECT				2016 FUTURE WITH PROJECT				2016 FUTURE W/PROJECT + MITIGATION			
	1	2	V/C	Added	Total	2	V/C	Added	Total	2	V/C	Added	Total	2	V/C	Added	Total	2	V/C	Added	Total	2	V/C
Movement	Volume	Capacity	Ratio	Volume	Volume	Capacity	Ratio	Volume	Volume	Capacity	Ratio	Volume	Volume	Capacity	Ratio	Volume	Volume	Capacity	Ratio	Volume	Volume	Capacity	Ratio
Nb Left	128	1600	0.080 *	0	128	1600	0.080 *	0	128	1600	0.080 *	197	325	1600	0.203 *	0	325	1600	0.203 *	0	325	1600	0.203 *
Nb Thru	758	3200	0.292	0	758	3200	0.292	0	758	3200	0.292	26	784	3200	0.301	0	784	3200	0.301	0	784	3200	0.301
Nb Right	175	0	-	0	175	0	-	0	175	0	-	3	178	0	-	0	178	0	-	0	178	0	-
Sb Left	109	1600	0.068	5	114	1600	0.071	0	114	1600	0.071	3	112	1600	0.070	5	117	1600	0.073	0	117	1600	0.073
Sb Thru	763	3200	0.283 *	0	763	3200	0.283 *	0	763	3200	0.283 *	30	793	3200	0.316 *	0	793	3200	0.316 *	0	793	3200	0.316 *
Sb Right	144	0	-	0	144	0	-	0	144	0	-	74	218	0	-	0	218	0	-	0	218	0	-
Eb Left	255	1600	0.159	0	255	1600	0.159	0	255	1600	0.159	61	316	1600	0.198	0	316	1600	0.198	0	316	1600	0.198
Eb Thru	910	3200	0.284 *	6	916	3200	0.286 *	0	916	3200	0.286 *	155	1065	3200	0.333 *	6	1071	3200	0.335 *	0	1071	3200	0.335 *
Eb Right	117	1600	0.073	0	117	1600	0.073	0	117	1600	0.073	156	273	1600	0.171	0	273	1600	0.171	0	273	1600	0.171
Wb Left	210	1600	0.131 *	0	210	1600	0.131 *	0	210	1600	0.131 *	3	213	1600	0.133 *	0	213	1600	0.133 *	0	213	1600	0.133 *
Wb Thru	580	4800	0.139	7	587	4800	0.142	0	587	4800	0.142	176	756	4800	0.177	7	763	4800	0.180	0	763	4800	0.180
Wb Right	89	0	-	5	94	0	-	0	94	0	-	6	95	0	-	5	100	0	-	0	100	0	-
Yellow Allowance:			0.100 *				0.100 *				0.100 *				0.100 *				0.100 *				0.100 *
ICU			0.879				0.881				0.881				1.085				1.087				1.087
LOS			D				D				D				F				F				F

** Key conflicting movement as a part of ICU*
1 Counts conducted by: City Traffic Counters
2 Capacity expressed in veh/hour of green

LINSCOTT, LAW & GREENSPAN, ENGINEERS
600 S. Lake Avenue, Suite 500, Pasadena CA 91106
(626) 796.2322 Fax (626) 792-0941

INTERSECTION CAPACITY UTILIZATION

San Gabriel Boulevard @ Valley Boulevard
Peak hr: SAT MID-DAY
Annual Growth: 0.82%

Phase I

N-S St: San Gabriel Boulevard
E-W St: Valley Boulevard
Project: Flair Spectrum Project/1-14-4074-1
File: ICU1

Date: 09/15/2014
Date of Count: 2014
Projection Year: 2016

	2014 EXIST. TRAFFIC			2014 EXISTING WITH PROJECT				2014 EXIST. W/PROJECT + MITIGATION				2016 FUTURE WITHOUT PROJECT				2016 FUTURE WITH PROJECT				2016 FUTURE W/PROJECT + MITIGATION			
	1	2	V/C	Added	Total	2	V/C	Added	Total	2	V/C	Added	Total	2	V/C	Added	Total	2	V/C	Added	Total	2	V/C
Movement	Volume	Capacity	Ratio	Volume	Volume	Capacity	Ratio	Volume	Volume	Capacity	Ratio	Volume	Volume	Capacity	Ratio	Volume	Volume	Capacity	Ratio	Volume	Volume	Capacity	Ratio
Nb Left	176	1600	0.110	0	176	1600	0.110	0	176	1600	0.110	241	417	1600	0.261 *	0	417	1600	0.261 *	0	417	1600	0.261 *
Nb Thru	635	3200	0.286 *	0	635	3200	0.286 *	0	635	3200	0.286 *	26	661	3200	0.296	0	661	3200	0.296	0	661	3200	0.296
Nb Right	280	0	-	0	280	0	-	0	280	0	-	5	285	0	-	0	285	0	-	0	285	0	-
Sb Left	167	1600	0.104 *	10	177	1600	0.111 *	0	177	1600	0.111 *	4	171	1600	0.107	10	181	1600	0.113	0	181	1600	0.113
Sb Thru	672	3200	0.265	0	672	3200	0.265	0	672	3200	0.265	28	700	3200	0.302 *	0	700	3200	0.302 *	0	700	3200	0.302 *
Sb Right	175	0	-	0	175	0	-	0	175	0	-	91	266	0	-	0	266	0	-	0	266	0	-
Eb Left	213	1600	0.133	0	213	1600	0.133	0	213	1600	0.133	81	294	1600	0.183	0	294	1600	0.183	0	294	1600	0.183
Eb Thru	758	3200	0.237 *	12	770	3200	0.241 *	0	770	3200	0.241 *	186	944	3200	0.295 *	12	956	3200	0.299 *	0	956	3200	0.299 *
Eb Right	168	1600	0.105	0	168	1600	0.105	0	168	1600	0.105	210	378	1600	0.236	0	378	1600	0.236	0	378	1600	0.236
Wb Left	239	1600	0.149 *	0	239	1600	0.149 *	0	239	1600	0.149 *	4	243	1600	0.152 *	0	243	1600	0.152 *	0	243	1600	0.152 *
Wb Thru	627	4800	0.164	11	638	4800	0.169	0	638	4800	0.169	202	829	4800	0.207	11	840	4800	0.211	0	840	4800	0.211
Wb Right	162	0	-	9	171	0	-	0	171	0	-	4	166	0	-	9	175	0	-	0	175	0	-
Yellow Allowance:			0.100 *				0.100 *				0.100 *				0.100 *				0.100 *				0.100 *
ICU			0.877				0.887				0.887				1.109				1.113				1.113
LOS			D				D				D				F				F				F

** Key conflicting movement as a part of ICU*
1 Counts conducted by: City Traffic Counters
2 Capacity expressed in veh/hour of green

LINSCOTT, LAW & GREENSPAN, ENGINEERS
600 S. Lake Avenue, Suite 500, Pasadena CA 91106
(626) 796.2322 Fax (626) 792-0941

INTERSECTION CAPACITY UTILIZATION

San Gabriel Boulevard @ Valley Boulevard
Peak hr: AM
Annual Growth: 0.82%

Phases I & II

N-S St: San Gabriel Boulevard
E-W St: Valley Boulevard
Project: Flair Spectrum Project/1-14-4074-1
File: ICU1

Date: 09/15/2014
Date of Count: 2014
Projection Year: 2019

	2014 EXIST. TRAFFIC			2014 EXISTING WITH PROJECT				2014 EXIST. W/PROJECT + MITIGATION				2019 FUTURE WITHOUT PROJECT				2019 FUTURE WITH PROJECT				2019 FUTURE W/PROJECT + MITIGATION			
	1	2	V/C	Added	Total	2	V/C	Added	Total	2	V/C	Added	Total	2	V/C	Added	Total	2	V/C	Added	Total	2	V/C
Movement	Volume	Capacity	Ratio	Volume	Volume	Capacity	Ratio	Volume	Volume	Capacity	Ratio	Volume	Volume	Capacity	Ratio	Volume	Volume	Capacity	Ratio	Volume	Volume	Capacity	Ratio
Nb Left	131	1600	0.082 *	0	131	1600	0.082 *	0	131	1600	0.082 *	150	281	1600	0.176 *	0	281	1600	0.176 *	0	281	1600	0.176 *
Nb Thru	591	3200	0.215	0	591	3200	0.215	0	591	3200	0.215	71	662	3200	0.238	0	662	3200	0.238	0	662	3200	0.238
Nb Right	96	0	-	0	96	0	-	0	96	0	-	4	100	0	-	0	100	0	-	0	100	0	-
Sb Left	86	1600	0.054	3	89	1600	0.056	0	89	1600	0.056	18	104	1600	0.065	3	107	1600	0.067	0	107	1600	0.067
Sb Thru	761	3200	0.288 *	0	761	3200	0.288 *	0	761	3200	0.288 *	102	863	3200	0.344 *	0	863	3200	0.344 *	0	863	3200	0.344 *
Sb Right	159	0	-	0	159	0	-	0	159	0	-	78	237	0	-	0	237	0	-	0	237	0	-
Eb Left	81	1600	0.051 *	0	81	1600	0.051 *	0	81	1600	0.051 *	63	144	1600	0.090 *	0	144	1600	0.090 *	0	144	1600	0.090 *
Eb Thru	387	3200	0.121	7	394	3200	0.123	0	394	3200	0.123	127	514	3200	0.161	7	521	3200	0.163	0	521	3200	0.163
Eb Right	75	1600	0.047	0	75	1600	0.047	0	75	1600	0.047	134	209	1600	0.131	0	209	1600	0.131	0	209	1600	0.131
Wb Left	177	1600	0.111	0	177	1600	0.111	0	177	1600	0.111	7	184	1600	0.115	0	184	1600	0.115	0	184	1600	0.115
Wb Thru	890	4800	0.198 *	9	899	4800	0.200 *	0	899	4800	0.200 *	158	1048	4800	0.232 *	9	1057	4800	0.234 *	0	1057	4800	0.234 *
Wb Right	58	0	-	1	59	0	-	0	59	0	-	8	66	0	-	1	67	0	-	0	67	0	-
Yellow Allowance:			0.100 *				0.100 *				0.100 *				0.100 *				0.100 *				0.100 *
ICU			0.718				0.720				0.720				0.942				0.944				0.944
LOS			C				C				C				E				E				E

** Key conflicting movement as a part of ICU*
1 Counts conducted by: City Traffic Counters
2 Capacity expressed in veh/hour of green

LINSCOTT, LAW & GREENSPAN, ENGINEERS
600 S. Lake Avenue, Suite 500, Pasadena CA 91106
(626) 796.2322 Fax (626) 792-0941

INTERSECTION CAPACITY UTILIZATION

San Gabriel Boulevard @ Valley Boulevard
Peak hr: PM
Annual Growth: 0.82%

Phases I & II

N-S St: San Gabriel Boulevard
E-W St: Valley Boulevard
Project: Flair Spectrum Project/1-14-4074-1
File: ICU1

Date: 09/15/2014
Date of Count: 2014
Projection Year: 2019

	2014 EXIST. TRAFFIC			2014 EXISTING WITH PROJECT				2014 EXIST. W/PROJECT + MITIGATION				2019 FUTURE WITHOUT PROJECT				2019 FUTURE WITH PROJECT				2019 FUTURE W/PROJECT + MITIGATION			
	1	2	V/C	Added	Total	2	V/C	Added	Total	2	V/C	Added	Total	2	V/C	Added	Total	2	V/C	Added	Total	2	V/C
Movement	Volume	Capacity	Ratio	Volume	Volume	Capacity	Ratio	Volume	Volume	Capacity	Ratio	Volume	Volume	Capacity	Ratio	Volume	Volume	Capacity	Ratio	Volume	Volume	Capacity	Ratio
Nb Left	128	1600	0.080 *	0	128	1600	0.080 *	0	128	1600	0.080 *	200	328	1600	0.205 *	0	328	1600	0.205 *	0	328	1600	0.205 *
Nb Thru	758	3200	0.292	0	758	3200	0.292	0	758	3200	0.292	46	804	3200	0.308	0	804	3200	0.308	0	804	3200	0.308
Nb Right	175	0	-	0	175	0	-	0	175	0	-	7	182	0	-	0	182	0	-	0	182	0	-
Sb Left	109	1600	0.068	5	114	1600	0.071	0	114	1600	0.071	6	115	1600	0.072	5	120	1600	0.075	0	120	1600	0.075
Sb Thru	763	3200	0.283 *	0	763	3200	0.283 *	0	763	3200	0.283 *	49	812	3200	0.323 *	0	812	3200	0.323 *	0	812	3200	0.323 *
Sb Right	144	0	-	0	144	0	-	0	144	0	-	78	222	0	-	0	222	0	-	0	222	0	-
Eb Left	255	1600	0.159	0	255	1600	0.159	0	255	1600	0.159	68	323	1600	0.202	0	323	1600	0.202	0	323	1600	0.202
Eb Thru	910	3200	0.284 *	13	923	3200	0.288 *	0	923	3200	0.288 *	178	1088	3200	0.340 *	13	1101	3200	0.344 *	0	1101	3200	0.344 *
Eb Right	117	1600	0.073	0	117	1600	0.073	0	117	1600	0.073	159	276	1600	0.172	0	276	1600	0.172	0	276	1600	0.172
Wb Left	210	1600	0.131 *	0	210	1600	0.131 *	0	210	1600	0.131 *	9	219	1600	0.137 *	0	219	1600	0.137 *	0	219	1600	0.137 *
Wb Thru	580	4800	0.139	11	591	4800	0.143	0	591	4800	0.143	190	770	4800	0.181	11	781	4800	0.184	0	781	4800	0.184
Wb Right	89	0	-	5	94	0	-	0	94	0	-	9	98	0	-	5	103	0	-	0	103	0	-
Yellow Allowance:			0.100 *				0.100 *				0.100 *				0.100 *				0.100 *				0.100 *
ICU			0.879				0.883				0.883				1.105				1.109				1.109
LOS			D				D				D				F				F				F

** Key conflicting movement as a part of ICU*
1 Counts conducted by: City Traffic Counters
2 Capacity expressed in veh/hour of green

LINSCOTT, LAW & GREENSPAN, ENGINEERS
600 S. Lake Avenue, Suite 500, Pasadena CA 91106
(626) 796.2322 Fax (626) 792-0941

INTERSECTION CAPACITY UTILIZATION

San Gabriel Boulevard @ Valley Boulevard
Peak hr: SAT MID-DAY
Annual Growth: 0.82%

Phases I & II

N-S St: San Gabriel Boulevard
E-W St: Valley Boulevard
Project: Flair Spectrum Project/1-14-4074-1
File: ICU1

Date: 09/15/2014
Date of Count: 2014
Projection Year: 2019

	2014 EXIST. TRAFFIC			2014 EXISTING WITH PROJECT				2014 EXIST. W/PROJECT + MITIGATION				2019 FUTURE WITHOUT PROJECT				2019 FUTURE WITH PROJECT				2019 FUTURE W/PROJECT + MITIGATION			
	1	2	V/C	Added	Total	2	V/C	Added	Total	2	V/C	Added	Total	2	V/C	Added	Total	2	V/C	Added	Total	2	V/C
Movement	Volume	Capacity	Ratio	Volume	Volume	Capacity	Ratio	Volume	Volume	Capacity	Ratio	Volume	Volume	Capacity	Ratio	Volume	Volume	Capacity	Ratio	Volume	Volume	Capacity	Ratio
Nb Left	176	1600	0.110	0	176	1600	0.110	0	176	1600	0.110	245	421	1600	0.263 *	0	421	1600	0.263 *	0	421	1600	0.263 *
Nb Thru	635	3200	0.286 *	0	635	3200	0.286 *	0	635	3200	0.286 *	42	677	3200	0.303	0	677	3200	0.303	0	677	3200	0.303
Nb Right	280	0	-	0	280	0	-	0	280	0	-	12	292	0	-	0	292	0	-	0	292	0	-
Sb Left	167	1600	0.104 *	10	177	1600	0.111 *	0	177	1600	0.111 *	8	175	1600	0.109	10	185	1600	0.116	0	185	1600	0.116
Sb Thru	672	3200	0.265	0	672	3200	0.265	0	672	3200	0.265	45	717	3200	0.309 *	0	717	3200	0.309 *	0	717	3200	0.309 *
Sb Right	175	0	-	0	175	0	-	0	175	0	-	95	270	0	-	0	270	0	-	0	270	0	-
Eb Left	213	1600	0.133	0	213	1600	0.133	0	213	1600	0.133	86	299	1600	0.187	0	299	1600	0.187	0	299	1600	0.187
Eb Thru	758	3200	0.237 *	17	775	3200	0.242 *	0	775	3200	0.242 *	206	964	3200	0.301 *	17	981	3200	0.306 *	0	981	3200	0.306 *
Eb Right	168	1600	0.105	0	168	1600	0.105	0	168	1600	0.105	214	382	1600	0.239	0	382	1600	0.239	0	382	1600	0.239
Wb Left	239	1600	0.149 *	0	239	1600	0.149 *	0	239	1600	0.149 *	10	249	1600	0.156 *	0	249	1600	0.156 *	0	249	1600	0.156 *
Wb Thru	627	4800	0.164	15	642	4800	0.169	0	642	4800	0.169	218	845	4800	0.211	15	860	4800	0.216	0	860	4800	0.216
Wb Right	162	0	-	9	171	0	-	0	171	0	-	8	170	0	-	9	179	0	-	0	179	0	-
Yellow Allowance:			0.100 *				0.100 *				0.100 *				0.100 *				0.100 *				0.100 *
ICU			0.877				0.888				0.888				1.129				1.134				1.134
LOS			D				D				D				F				F				F

** Key conflicting movement as a part of ICU*
1 Counts conducted by: City Traffic Counters
2 Capacity expressed in veh/hour of green

LINSCOTT, LAW & GREENSPAN, ENGINEERS
600 S. Lake Avenue, Suite 500, Pasadena CA 91106
(626) 796.2322 Fax (626) 792-0941

INTERSECTION CAPACITY UTILIZATION

San Gabriel Boulevard @ Valley Boulevard
Peak hr: AM
Annual Growth: 0.52%

General Plan Buildout (Phases I & II)

N-S St: San Gabriel Boulevard
E-W St: Valley Boulevard
Project: Flair Spectrum Project/1-14-4074-1
File: ICU1

Date: 09/15/2014
Date of Count: 2014
Projection Year: 2035

	2014 EXIST. TRAFFIC			2014 EXISTING WITH PROJECT				2014 EXIST. W/PROJECT + MITIGATION				2035 FUTURE WITHOUT PROJECT				2035 FUTURE WITH PROJECT				2035 FUTURE W/PROJECT + MITIGATION			
	1	2	V/C	Added	Total	2	V/C	Added	Total	2	V/C	Added	Total	2	V/C	Added	Total	2	V/C	Added	Total	2	V/C
Movement	Volume	Capacity	Ratio	Volume	Volume	Capacity	Ratio	Volume	Volume	Capacity	Ratio	Volume	Volume	Capacity	Ratio	Volume	Volume	Capacity	Ratio	Volume	Volume	Capacity	Ratio
Nb Left	131	1600	0.082 *	0	131	1600	0.082 *	0	131	1600	0.082 *	160	291	1600	0.182 *	0	291	1600	0.182 *	0	291	1600	0.182 *
Nb Thru	591	3200	0.215	0	591	3200	0.215	0	591	3200	0.215	114	705	3200	0.254	0	705	3200	0.254	0	705	3200	0.254
Nb Right	96	0	-	0	96	0	-	0	96	0	-	11	107	0	-	0	107	0	-	0	107	0	-
Sb Left	86	1600	0.054	3	89	1600	0.056	0	89	1600	0.056	24	110	1600	0.069	3	113	1600	0.071	0	113	1600	0.071
Sb Thru	761	3200	0.288 *	0	761	3200	0.288 *	0	761	3200	0.288 *	158	919	3200	0.365 *	0	919	3200	0.365 *	0	919	3200	0.365 *
Sb Right	159	0	-	0	159	0	-	0	159	0	-	89	248	0	-	0	248	0	-	0	248	0	-
Eb Left	81	1600	0.051 *	0	81	1600	0.051 *	0	81	1600	0.051 *	69	150	1600	0.094 *	0	150	1600	0.094 *	0	150	1600	0.094 *
Eb Thru	387	3200	0.121	7	394	3200	0.123	0	394	3200	0.123	156	543	3200	0.170	7	550	3200	0.172	0	550	3200	0.172
Eb Right	75	1600	0.047	0	75	1600	0.047	0	75	1600	0.047	140	215	1600	0.134	0	215	1600	0.134	0	215	1600	0.134
Wb Left	177	1600	0.111	0	177	1600	0.111	0	177	1600	0.111	20	197	1600	0.123	0	197	1600	0.123	0	197	1600	0.123
Wb Thru	890	4800	0.198 *	9	899	4800	0.200 *	0	899	4800	0.200 *	223	1113	4800	0.247 *	9	1122	4800	0.249 *	0	1122	4800	0.249 *
Wb Right	58	0	-	1	59	0	-	0	59	0	-	13	71	0	-	1	72	0	-	0	72	0	-
Yellow Allowance:			0.100 *				0.100 *				0.100 *				0.100 *				0.100 *				0.100 *
ICU			0.718				0.720				0.720				0.987				0.989				0.989
LOS			C				C				C				E				E				E

** Key conflicting movement as a part of ICU*
1 Counts conducted by: City Traffic Counters
2 Capacity expressed in veh/hour of green

LINSCOTT, LAW & GREENSPAN, ENGINEERS
600 S. Lake Avenue, Suite 500, Pasadena CA 91106
(626) 796.2322 Fax (626) 792-0941

INTERSECTION CAPACITY UTILIZATION

San Gabriel Boulevard @ Valley Boulevard
Peak hr: PM
Annual Growth: 0.52%

General Plan Buildout (Phases I & II)

N-S St: San Gabriel Boulevard
E-W St: Valley Boulevard
Project: Flair Spectrum Project/1-14-4074-1
File: ICU1

Date: 09/15/2014
Date of Count: 2014
Projection Year: 2035

	2014 EXIST. TRAFFIC			2014 EXISTING WITH PROJECT				2014 EXIST. W/PROJECT + MITIGATION				2035 FUTURE WITHOUT PROJECT				2035 FUTURE WITH PROJECT				2035 FUTURE W/PROJECT + MITIGATION			
	1	2	V/C	Added	Total	2	V/C	Added	Total	2	V/C	Added	Total	2	V/C	Added	Total	2	V/C	Added	Total	2	V/C
Movement	Volume	Capacity	Ratio	Volume	Volume	Capacity	Ratio	Volume	Volume	Capacity	Ratio	Volume	Volume	Capacity	Ratio	Volume	Volume	Capacity	Ratio	Volume	Volume	Capacity	Ratio
Nb Left	128	1600	0.080 *	0	128	1600	0.080 *	0	128	1600	0.080 *	210	338	1600	0.211 *	0	338	1600	0.211 *	0	338	1600	0.211 *
Nb Thru	758	3200	0.292	0	758	3200	0.292	0	758	3200	0.292	101	859	3200	0.329	0	859	3200	0.329	0	859	3200	0.329
Nb Right	175	0	-	0	175	0	-	0	175	0	-	20	195	0	-	0	195	0	-	0	195	0	-
Sb Left	109	1600	0.068	5	114	1600	0.071	0	114	1600	0.071	14	123	1600	0.077	5	128	1600	0.080	0	128	1600	0.080
Sb Thru	763	3200	0.283 *	0	763	3200	0.283 *	0	763	3200	0.283 *	105	868	3200	0.344 *	0	868	3200	0.344 *	0	868	3200	0.344 *
Sb Right	144	0	-	0	144	0	-	0	144	0	-	89	233	0	-	0	233	0	-	0	233	0	-
Eb Left	255	1600	0.159	0	255	1600	0.159	0	255	1600	0.159	86	341	1600	0.213	0	341	1600	0.213	0	341	1600	0.213
Eb Thru	910	3200	0.284 *	13	923	3200	0.288 *	0	923	3200	0.288 *	245	1155	3200	0.361 *	13	1168	3200	0.365 *	0	1168	3200	0.365 *
Eb Right	117	1600	0.073	0	117	1600	0.073	0	117	1600	0.073	167	284	1600	0.178	0	284	1600	0.178	0	284	1600	0.178
Wb Left	210	1600	0.131 *	0	210	1600	0.131 *	0	210	1600	0.131 *	24	234	1600	0.146 *	0	234	1600	0.146 *	0	234	1600	0.146 *
Wb Thru	580	4800	0.139	11	591	4800	0.143	0	591	4800	0.143	233	813	4800	0.191	11	824	4800	0.194	0	824	4800	0.194
Wb Right	89	0	-	5	94	0	-	0	94	0	-	15	104	0	-	5	109	0	-	0	109	0	-
Yellow Allowance:			0.100 *				0.100 *				0.100 *				0.100 *				0.100 *				0.100 *
ICU			0.879				0.883				0.883				1.162				1.166				1.166
LOS			D				D				D				F				F				F

** Key conflicting movement as a part of ICU*
1 Counts conducted by: City Traffic Counters
2 Capacity expressed in veh/hour of green

LINSCOTT, LAW & GREENSPAN, ENGINEERS
600 S. Lake Avenue, Suite 500, Pasadena CA 91106
(626) 796.2322 Fax (626) 792-0941

INTERSECTION CAPACITY UTILIZATION

San Gabriel Boulevard @ Valley Boulevard
Peak hr: SAT MID-DAY
Annual Growth: 0.52%

General Plan Buildout (Phases I & II)

N-S St: San Gabriel Boulevard
E-W St: Valley Boulevard
Project: Flair Spectrum Project/1-14-4074-1
File: ICU1

Date: 09/15/2014
Date of Count: 2014
Projection Year: 2035

	2014 EXIST. TRAFFIC			2014 EXISTING WITH PROJECT				2014 EXIST. W/PROJECT + MITIGATION				2035 FUTURE WITHOUT PROJECT				2035 FUTURE WITH PROJECT				2035 FUTURE W/PROJECT + MITIGATION			
	1	2	V/C	Added	Total	2	V/C	Added	Total	2	V/C	Added	Total	2	V/C	Added	Total	2	V/C	Added	Total	2	V/C
Movement	Volume	Capacity	Ratio	Volume	Volume	Capacity	Ratio	Volume	Volume	Capacity	Ratio	Volume	Volume	Capacity	Ratio	Volume	Volume	Capacity	Ratio	Volume	Volume	Capacity	Ratio
Nb Left	176	1600	0.110	0	176	1600	0.110	0	176	1600	0.110	258	434	1600	0.271 *	0	434	1600	0.271 *	0	434	1600	0.271 *
Nb Thru	635	3200	0.286 *	0	635	3200	0.286 *	0	635	3200	0.286 *	89	724	3200	0.324	0	724	3200	0.324	0	724	3200	0.324
Nb Right	280	0	-	0	280	0	-	0	280	0	-	32	312	0	-	0	312	0	-	0	312	0	-
Sb Left	167	1600	0.104 *	10	177	1600	0.111 *	0	177	1600	0.111 *	20	187	1600	0.117	10	197	1600	0.123	0	197	1600	0.123
Sb Thru	672	3200	0.265	0	672	3200	0.265	0	672	3200	0.265	94	766	3200	0.328 *	0	766	3200	0.328 *	0	766	3200	0.328 *
Sb Right	175	0	-	0	175	0	-	0	175	0	-	108	283	0	-	0	283	0	-	0	283	0	-
Eb Left	213	1600	0.133	0	213	1600	0.133	0	213	1600	0.133	102	315	1600	0.197	0	315	1600	0.197	0	315	1600	0.197
Eb Thru	758	3200	0.237 *	17	775	3200	0.242 *	0	775	3200	0.242 *	261	1019	3200	0.319 *	17	1036	3200	0.324 *	0	1036	3200	0.324 *
Eb Right	168	1600	0.105	0	168	1600	0.105	0	168	1600	0.105	226	394	1600	0.246	0	394	1600	0.246	0	394	1600	0.246
Wb Left	239	1600	0.149 *	0	239	1600	0.149 *	0	239	1600	0.149 *	28	267	1600	0.167 *	0	267	1600	0.167 *	0	267	1600	0.167 *
Wb Thru	627	4800	0.164	15	642	4800	0.169	0	642	4800	0.169	264	891	4800	0.223	15	906	4800	0.228	0	906	4800	0.228
Wb Right	162	0	-	9	171	0	-	0	171	0	-	20	182	0	-	9	191	0	-	0	191	0	-
Yellow Allowance:			0.100 *				0.100 *				0.100 *				0.100 *				0.100 *				0.100 *
ICU			0.877				0.888				0.888				1.184				1.190				1.190
LOS			D				D				D				F				F				F

** Key conflicting movement as a part of ICU*
1 Counts conducted by: City Traffic Counters
2 Capacity expressed in veh/hour of green

LINSCOTT, LAW & GREENSPAN, ENGINEERS
600 S. Lake Avenue, Suite 500, Pasadena CA 91106
(626) 796.2322 Fax (626) 792-0941

INTERSECTION CAPACITY UTILIZATION

Walnut Grove Avenue @ Valley Boulevard
Peak hr: AM
Annual Growth: 0.82%

Phase I

N-S St: Walnut Grove Avenue
E-W St: Valley Boulevard
Project: Flair Spectrum Project/1-14-4074-1
File: ICU2

Date: 09/15/2014
Date of Count: 2014
Projection Year: 2016

	2014 EXIST. TRAFFIC			2014 EXISTING WITH PROJECT				2014 EXIST. W/PROJECT + MITIGATION				2016 FUTURE WITHOUT PROJECT				2016 FUTURE WITH PROJECT				2016 FUTURE W/PROJECT + MITIGATION			
	1	2	V/C	Added	Total	2	V/C	Added	Total	2	V/C	Added	Total	2	V/C	Added	Total	2	V/C	Added	Total	2	V/C
Movement	Volume	Capacity	Ratio	Volume	Volume	Capacity	Ratio	Volume	Volume	Capacity	Ratio	Volume	Volume	Capacity	Ratio	Volume	Volume	Capacity	Ratio	Volume	Volume	Capacity	Ratio
Nb Left	104	1600	0.065 *	0	104	1600	0.065 *	0	104	1600	0.065 *	20	124	1600	0.077 *	0	124	1600	0.077 *	0	124	1600	0.077 *
Nb Thru	440	3200	0.174	0	440	3200	0.174	0	440	3200	0.174	29	469	3200	0.183	0	469	3200	0.183	0	469	3200	0.183
Nb Right	116	0	-	0	116	0	-	0	116	0	-	2	118	0	-	0	118	0	-	0	118	0	-
Sb Left	43	1600	0.027	0	43	1600	0.027	0	43	1600	0.027	1	44	1600	0.027	0	44	1600	0.027	0	44	1600	0.027
Sb Thru	738	3200	0.273 *	0	738	3200	0.273 *	0	738	3200	0.273 *	42	780	3200	0.296 *	0	780	3200	0.296 *	0	780	3200	0.296 *
Sb Right	137	0	-	0	137	0	-	0	137	0	-	29	166	0	-	0	166	0	-	0	166	0	-
Eb Left	14	1600	0.009 *	0	14	1600	0.009 *	0	14	1600	0.009 *	24	38	1600	0.024 *	0	38	1600	0.024 *	0	38	1600	0.024 *
Eb Thru	539	3200	0.193	10	549	3200	0.196	0	549	3200	0.196	91	630	3200	0.228	10	640	3200	0.231	0	640	3200	0.231
Eb Right	79	0	-	0	79	0	-	0	79	0	-	20	99	0	-	0	99	0	-	0	99	0	-
Wb Left	194	1600	0.121	0	194	1600	0.121	0	194	1600	0.121	3	197	1600	0.123	0	197	1600	0.123	0	197	1600	0.123
Wb Thru	1001	3200	0.329 *	4	1005	3200	0.330 *	0	1005	3200	0.330 *	98	1099	3200	0.360 *	4	1103	3200	0.361 *	0	1103	3200	0.361 *
Wb Right	52	0	-	0	52	0	-	0	52	0	-	1	53	0	-	0	53	0	-	0	53	0	-
Yellow Allowance:			0.100 *				0.100 *				0.100 *				0.100 *				0.100 *				0.100 *
ICU			0.776				0.778				0.778				0.857				0.858				0.858
LOS			C				C				C				D				D				D

** Key conflicting movement as a part of ICU*
1 Counts conducted by: City Traffic Counters
2 Capacity expressed in veh/hour of green

LINSCOTT, LAW & GREENSPAN, ENGINEERS
600 S. Lake Avenue, Suite 500, Pasadena CA 91106
(626) 796.2322 Fax (626) 792-0941

INTERSECTION CAPACITY UTILIZATION

N-S St: Walnut Grove Avenue
E-W St: Valley Boulevard
Project: Flair Spectrum Project/1-14-4074-1
File: ICU2

Walnut Grove Avenue @ Valley Boulevard
Peak hr: PM
Annual Growth: 0.82%

Phase I

Date: 09/15/2014
Date of Count: 2014
Projection Year: 2016

	2014 EXIST. TRAFFIC			2014 EXISTING WITH PROJECT				2014 EXIST. W/PROJECT + MITIGATION				2016 FUTURE WITHOUT PROJECT				2016 FUTURE WITH PROJECT				2016 FUTURE W/PROJECT + MITIGATION			
	1	2	V/C	Added	Total	2	V/C	Added	Total	2	V/C	Added	Total	2	V/C	Added	Total	2	V/C	Added	Total	2	V/C
Movement	Volume	Capacity	Ratio	Volume	Volume	Capacity	Ratio	Volume	Volume	Capacity	Ratio	Volume	Volume	Capacity	Ratio	Volume	Volume	Capacity	Ratio	Volume	Volume	Capacity	Ratio
Nb Left	134	1600	0.084	0	134	1600	0.084	0	134	1600	0.084	29	163	1600	0.102 *	0	163	1600	0.102 *	0	163	1600	0.102 *
Nb Thru	688	3200	0.270 *	0	688	3200	0.270 *	0	688	3200	0.270 *	30	718	3200	0.281	0	718	3200	0.281	0	718	3200	0.281
Nb Right	177	0	-	0	177	0	-	0	177	0	-	3	180	0	-	0	180	0	-	0	180	0	-
Sb Left	58	1600	0.036 *	0	58	1600	0.036 *	0	58	1600	0.036 *	1	59	1600	0.037	0	59	1600	0.037	0	59	1600	0.037
Sb Thru	549	3200	0.201	0	549	3200	0.201	0	549	3200	0.201	28	577	3200	0.221 *	0	577	3200	0.221 *	0	577	3200	0.221 *
Sb Right	93	0	-	0	93	0	-	0	93	0	-	38	131	0	-	0	131	0	-	0	131	0	-
Eb Left	117	1600	0.073	0	117	1600	0.073	0	117	1600	0.073	31	148	1600	0.092	0	148	1600	0.092	0	148	1600	0.092
Eb Thru	924	3200	0.325 *	16	940	3200	0.330 *	0	940	3200	0.330 *	108	1032	3200	0.366 *	16	1048	3200	0.371 *	0	1048	3200	0.371 *
Eb Right	117	0	-	0	117	0	-	0	117	0	-	21	138	0	-	0	138	0	-	0	138	0	-
Wb Left	175	1600	0.109 *	0	175	1600	0.109 *	0	175	1600	0.109 *	3	178	1600	0.111 *	0	178	1600	0.111 *	0	178	1600	0.111 *
Wb Thru	680	3200	0.231	17	697	3200	0.236	0	697	3200	0.236	118	798	3200	0.268	17	815	3200	0.273	0	815	3200	0.273
Wb Right	59	0	-	0	59	0	-	0	59	0	-	1	60	0	-	0	60	0	-	0	60	0	-
Yellow Allowance:			0.100 *				0.100 *				0.100 *				0.100 *				0.100 *				0.100 *
ICU			0.841				0.846				0.846				0.900				0.905				0.905
LOS			D				D				D				D				E				E

** Key conflicting movement as a part of ICU*
1 Counts conducted by: City Traffic Counters
2 Capacity expressed in veh/hour of green

LINSCOTT, LAW & GREENSPAN, ENGINEERS
600 S. Lake Avenue, Suite 500, Pasadena CA 91106
(626) 796.2322 Fax (626) 792-0941

INTERSECTION CAPACITY UTILIZATION

Walnut Grove Avenue @ Valley Boulevard
Peak hr: SAT MID-DAY
Annual Growth: 0.82%

Phase I

N-S St: Walnut Grove Avenue
E-W St: Valley Boulevard
Project: Flair Spectrum Project/1-14-4074-1
File: ICU2

Date: 09/15/2014
Date of Count: 2014
Projection Year: 2016

	2014 EXIST. TRAFFIC			2014 EXISTING WITH PROJECT				2014 EXIST. W/PROJECT + MITIGATION				2016 FUTURE WITHOUT PROJECT				2016 FUTURE WITH PROJECT				2016 FUTURE W/PROJECT + MITIGATION			
	1	2	V/C	Added	Total	2	V/C	Added	Total	2	V/C	Added	Total	2	V/C	Added	Total	2	V/C	Added	Total	2	V/C
Movement	Volume	Capacity	Ratio	Volume	Volume	Capacity	Ratio	Volume	Volume	Capacity	Ratio	Volume	Volume	Capacity	Ratio	Volume	Volume	Capacity	Ratio	Volume	Volume	Capacity	Ratio
Nb Left	149	1600	0.093 *	0	149	1600	0.093 *	0	149	1600	0.093 *	30	179	1600	0.112 *	0	179	1600	0.112 *	0	179	1600	0.112 *
Nb Thru	410	3200	0.183	0	410	3200	0.183	0	410	3200	0.183	25	435	3200	0.191	0	435	3200	0.191	0	435	3200	0.191
Nb Right	174	0	-	0	174	0	-	0	174	0	-	3	177	0	-	0	177	0	-	0	177	0	-
Sb Left	46	1600	0.029	0	46	1600	0.029	0	46	1600	0.029	1	47	1600	0.029	0	47	1600	0.029	0	47	1600	0.029
Sb Thru	468	3200	0.186 *	0	468	3200	0.186 *	0	468	3200	0.186 *	27	495	3200	0.208 *	0	495	3200	0.208 *	0	495	3200	0.208 *
Sb Right	126	0	-	0	126	0	-	0	126	0	-	46	172	0	-	0	172	0	-	0	172	0	-
Eb Left	102	1600	0.064	0	102	1600	0.064	0	102	1600	0.064	40	142	1600	0.089	0	142	1600	0.089	0	142	1600	0.089
Eb Thru	830	3200	0.314 *	31	861	3200	0.324 *	0	861	3200	0.324 *	125	955	3200	0.362 *	31	986	3200	0.371 *	0	986	3200	0.371 *
Eb Right	175	0	-	0	175	0	-	0	175	0	-	28	203	0	-	0	203	0	-	0	203	0	-
Wb Left	152	1600	0.095 *	0	152	1600	0.095 *	0	152	1600	0.095 *	3	155	1600	0.097 *	0	155	1600	0.097 *	0	155	1600	0.097 *
Wb Thru	887	3200	0.291	28	915	3200	0.300	0	915	3200	0.300	134	1021	3200	0.333	28	1049	3200	0.342	0	1049	3200	0.342
Wb Right	45	0	-	0	45	0	-	0	45	0	-	1	46	0	-	0	46	0	-	0	46	0	-
Yellow Allowance:			0.100 *				0.100 *				0.100 *				0.100 *				0.100 *				0.100 *
ICU			0.788				0.798				0.798				0.879				0.889				0.889
LOS			C				C				C				D				D				D

** Key conflicting movement as a part of ICU*
1 Counts conducted by: City Traffic Counters
2 Capacity expressed in veh/hour of green

LINSCOTT, LAW & GREENSPAN, ENGINEERS
600 S. Lake Avenue, Suite 500, Pasadena CA 91106
(626) 796.2322 Fax (626) 792-0941

INTERSECTION CAPACITY UTILIZATION

N-S St: Walnut Grove Avenue
E-W St: Valley Boulevard
Project: Flair Spectrum Project/1-14-4074-1
File: ICU2

Walnut Grove Avenue @ Valley Boulevard
Peak hr: AM
Annual Growth: 0.82%

Phases I & II

Date: 09/15/2014
Date of Count: 2014
Projection Year: 2019

	2014 EXIST. TRAFFIC			2014 EXISTING WITH PROJECT				2014 EXIST. W/PROJECT + MITIGATION				2019 FUTURE WITHOUT PROJECT				2019 FUTURE WITH PROJECT				2019 FUTURE W/PROJECT + MITIGATION			
	1	2	V/C	Added	Total	2	V/C	Added	Total	2	V/C	Added	Total	2	V/C	Added	Total	2	V/C	Added	Total	2	V/C
Movement	Volume	Capacity	Ratio	Volume	Volume	Capacity	Ratio	Volume	Volume	Capacity	Ratio	Volume	Volume	Capacity	Ratio	Volume	Volume	Capacity	Ratio	Volume	Volume	Capacity	Ratio
Nb Left	104	1600	0.065 *	0	104	1600	0.065 *	0	104	1600	0.065 *	22	126	1600	0.079 *	0	126	1600	0.079 *	0	126	1600	0.079 *
Nb Thru	440	3200	0.174	0	440	3200	0.174	0	440	3200	0.174	40	480	3200	0.188	0	480	3200	0.188	0	480	3200	0.188
Nb Right	116	0	-	0	116	0	-	0	116	0	-	5	121	0	-	0	121	0	-	0	121	0	-
Sb Left	43	1600	0.027	0	43	1600	0.027	0	43	1600	0.027	2	45	1600	0.028	0	45	1600	0.028	0	45	1600	0.028
Sb Thru	738	3200	0.273 *	0	738	3200	0.273 *	0	738	3200	0.273 *	61	799	3200	0.303 *	0	799	3200	0.303 *	0	799	3200	0.303 *
Sb Right	137	0	-	0	137	0	-	0	137	0	-	33	170	0	-	0	170	0	-	0	170	0	-
Eb Left	14	1600	0.009 *	0	14	1600	0.009 *	0	14	1600	0.009 *	25	39	1600	0.024 *	0	39	1600	0.024 *	0	39	1600	0.024 *
Eb Thru	539	3200	0.193	12	551	3200	0.197	0	551	3200	0.197	104	643	3200	0.233	12	655	3200	0.236	0	655	3200	0.236
Eb Right	79	0	-	0	79	0	-	0	79	0	-	22	101	0	-	0	101	0	-	0	101	0	-
Wb Left	194	1600	0.121	0	194	1600	0.121	0	194	1600	0.121	8	202	1600	0.126	0	202	1600	0.126	0	202	1600	0.126
Wb Thru	1001	3200	0.329 *	11	1012	3200	0.333 *	0	1012	3200	0.333 *	124	1125	3200	0.368 *	11	1136	3200	0.372 *	0	1136	3200	0.372 *
Wb Right	52	0	-	0	52	0	-	0	52	0	-	2	54	0	-	0	54	0	-	0	54	0	-
Yellow Allowance:			0.100 *				0.100 *				0.100 *				0.100 *				0.100 *				0.100 *
ICU			0.776				0.780				0.780				0.874				0.878				0.878
LOS			C				C				C				D				D				D

** Key conflicting movement as a part of ICU*
1 Counts conducted by: City Traffic Counters
2 Capacity expressed in veh/hour of green

LINSCOTT, LAW & GREENSPAN, ENGINEERS
600 S. Lake Avenue, Suite 500, Pasadena CA 91106
(626) 796.2322 Fax (626) 792-0941

INTERSECTION CAPACITY UTILIZATION

N-S St: Walnut Grove Avenue
E-W St: Valley Boulevard
Project: Flair Spectrum Project/1-14-4074-1
File: ICU2

Walnut Grove Avenue @ Valley Boulevard
Peak hr: PM
Annual Growth: 0.82%

Phases I & II

Date: 09/15/2014
Date of Count: 2014
Projection Year: 2019

	2014 EXIST. TRAFFIC			2014 EXISTING WITH PROJECT				2014 EXIST. W/PROJECT + MITIGATION				2019 FUTURE WITHOUT PROJECT				2019 FUTURE WITH PROJECT				2019 FUTURE W/PROJECT + MITIGATION			
	1	2	V/C	Added	Total	2	V/C	Added	Total	2	V/C	Added	Total	2	V/C	Added	Total	2	V/C	Added	Total	2	V/C
Movement	Volume	Capacity	Ratio	Volume	Volume	Capacity	Ratio	Volume	Volume	Capacity	Ratio	Volume	Volume	Capacity	Ratio	Volume	Volume	Capacity	Ratio	Volume	Volume	Capacity	Ratio
Nb Left	134	1600	0.084	0	134	1600	0.084	0	134	1600	0.084	33	167	1600	0.104 *	0	167	1600	0.104 *	0	167	1600	0.104 *
Nb Thru	688	3200	0.270 *	0	688	3200	0.270 *	0	688	3200	0.270 *	48	736	3200	0.288	0	736	3200	0.288	0	736	3200	0.288
Nb Right	177	0	-	0	177	0	-	0	177	0	-	7	184	0	-	0	184	0	-	0	184	0	-
Sb Left	58	1600	0.036 *	0	58	1600	0.036 *	0	58	1600	0.036 *	2	60	1600	0.038	0	60	1600	0.038	0	60	1600	0.038
Sb Thru	549	3200	0.201	0	549	3200	0.201	0	549	3200	0.201	42	591	3200	0.226 *	0	591	3200	0.226 *	0	591	3200	0.226 *
Sb Right	93	0	-	0	93	0	-	0	93	0	-	40	133	0	-	0	133	0	-	0	133	0	-
Eb Left	117	1600	0.073	0	117	1600	0.073	0	117	1600	0.073	34	151	1600	0.094	0	151	1600	0.094	0	151	1600	0.094
Eb Thru	924	3200	0.325 *	23	947	3200	0.333 *	0	947	3200	0.333 *	132	1056	3200	0.374 *	23	1079	3200	0.381 *	0	1079	3200	0.381 *
Eb Right	117	0	-	0	117	0	-	0	117	0	-	24	141	0	-	0	141	0	-	0	141	0	-
Wb Left	175	1600	0.109 *	0	175	1600	0.109 *	0	175	1600	0.109 *	7	182	1600	0.114 *	0	182	1600	0.114 *	0	182	1600	0.114 *
Wb Thru	680	3200	0.231	21	701	3200	0.238	0	701	3200	0.238	135	815	3200	0.274	21	836	3200	0.281	0	836	3200	0.281
Wb Right	59	0	-	0	59	0	-	0	59	0	-	2	61	0	-	0	61	0	-	0	61	0	-
Yellow Allowance:			0.100 *				0.100 *				0.100 *				0.100 *				0.100 *				0.100 *
ICU			0.841				0.848				0.848				0.918				0.925				0.925
LOS			D				D				D				E				E				E

** Key conflicting movement as a part of ICU*
1 Counts conducted by: City Traffic Counters
2 Capacity expressed in veh/hour of green

LINSCOTT, LAW & GREENSPAN, ENGINEERS
600 S. Lake Avenue, Suite 500, Pasadena CA 91106
(626) 796.2322 Fax (626) 792-0941

INTERSECTION CAPACITY UTILIZATION

Walnut Grove Avenue @ Valley Boulevard
Peak hr: SAT MID-DAY
Annual Growth: 0.82%

Phases I & II

N-S St: Walnut Grove Avenue
E-W St: Valley Boulevard
Project: Flair Spectrum Project/1-14-4074-1
File: ICU2

Date: 09/15/2014
Date of Count: 2014
Projection Year: 2019

	2014 EXIST. TRAFFIC			2014 EXISTING WITH PROJECT				2014 EXIST. W/PROJECT + MITIGATION				2019 FUTURE WITHOUT PROJECT				2019 FUTURE WITH PROJECT				2019 FUTURE W/PROJECT + MITIGATION			
	1	2	V/C	Added	Total	2	V/C	Added	Total	2	V/C	Added	Total	2	V/C	Added	Total	2	V/C	Added	Total	2	V/C
Movement	Volume	Capacity	Ratio	Volume	Volume	Capacity	Ratio	Volume	Volume	Capacity	Ratio	Volume	Volume	Capacity	Ratio	Volume	Volume	Capacity	Ratio	Volume	Volume	Capacity	Ratio
Nb Left	149	1600	0.093 *	0	149	1600	0.093 *	0	149	1600	0.093 *	34	183	1600	0.115 *	0	183	1600	0.115 *	0	183	1600	0.115 *
Nb Thru	410	3200	0.183	0	410	3200	0.183	0	410	3200	0.183	35	445	3200	0.196	0	445	3200	0.196	0	445	3200	0.196
Nb Right	174	0	-	0	174	0	-	0	174	0	-	7	181	0	-	0	181	0	-	0	181	0	-
Sb Left	46	1600	0.029	0	46	1600	0.029	0	46	1600	0.029	2	48	1600	0.030	0	48	1600	0.030	0	48	1600	0.030
Sb Thru	468	3200	0.186 *	0	468	3200	0.186 *	0	468	3200	0.186 *	39	507	3200	0.213 *	0	507	3200	0.213 *	0	507	3200	0.213 *
Sb Right	126	0	-	0	126	0	-	0	126	0	-	49	175	0	-	0	175	0	-	0	175	0	-
Eb Left	102	1600	0.064	0	102	1600	0.064	0	102	1600	0.064	42	144	1600	0.090	0	144	1600	0.090	0	144	1600	0.090
Eb Thru	830	3200	0.314 *	36	866	3200	0.325 *	0	866	3200	0.325 *	146	976	3200	0.370 *	36	1012	3200	0.381 *	0	1012	3200	0.381 *
Eb Right	175	0	-	0	175	0	-	0	175	0	-	32	207	0	-	0	207	0	-	0	207	0	-
Wb Left	152	1600	0.095 *	0	152	1600	0.095 *	0	152	1600	0.095 *	6	158	1600	0.099 *	0	158	1600	0.099 *	0	158	1600	0.099 *
Wb Thru	887	3200	0.291	32	919	3200	0.301	0	919	3200	0.301	156	1043	3200	0.341	32	1075	3200	0.351	0	1075	3200	0.351
Wb Right	45	0	-	0	45	0	-	0	45	0	-	2	47	0	-	0	47	0	-	0	47	0	-
Yellow Allowance:			0.100 *				0.100 *				0.100 *				0.100 *				0.100 *				0.100 *
ICU			0.788				0.799				0.799				0.896				0.907				0.907
LOS			C				C				C				D				E				E

** Key conflicting movement as a part of ICU*
1 Counts conducted by: City Traffic Counters
2 Capacity expressed in veh/hour of green

LINSCOTT, LAW & GREENSPAN, ENGINEERS
600 S. Lake Avenue, Suite 500, Pasadena CA 91106
(626) 796.2322 Fax (626) 792-0941

INTERSECTION CAPACITY UTILIZATION

N-S St: Walnut Grove Avenue
E-W St: Valley Boulevard
Project: Flair Spectrum Project/1-14-4074-1
File: ICU2

Walnut Grove Avenue @ Valley Boulevard
Peak hr: AM
Annual Growth: 0.52%

General Plan Buildout (Phases I & II)

Date: 09/15/2014
Date of Count: 2014
Projection Year: 2035

	2014 EXIST. TRAFFIC			2014 EXISTING WITH PROJECT				2014 EXIST. W/PROJECT + MITIGATION				2035 FUTURE WITHOUT PROJECT				2035 FUTURE WITH PROJECT				2035 FUTURE W/PROJECT + MITIGATION			
	1	2	V/C	Added	Total	2	V/C	Added	Total	2	V/C	Added	Total	2	V/C	Added	Total	2	V/C	Added	Total	2	V/C
Movement	Volume	Capacity	Ratio	Volume	Volume	Capacity	Ratio	Volume	Volume	Capacity	Ratio	Volume	Volume	Capacity	Ratio	Volume	Volume	Capacity	Ratio	Volume	Volume	Capacity	Ratio
Nb Left	104	1600	0.065 *	0	104	1600	0.065 *	0	104	1600	0.065 *	30	134	1600	0.084 *	0	134	1600	0.084 *	0	134	1600	0.084 *
Nb Thru	440	3200	0.174	0	440	3200	0.174	0	440	3200	0.174	73	513	3200	0.201	0	513	3200	0.201	0	513	3200	0.201
Nb Right	116	0	-	0	116	0	-	0	116	0	-	13	129	0	-	0	129	0	-	0	129	0	-
Sb Left	43	1600	0.027	0	43	1600	0.027	0	43	1600	0.027	5	48	1600	0.030	0	48	1600	0.030	0	48	1600	0.030
Sb Thru	738	3200	0.273 *	0	738	3200	0.273 *	0	738	3200	0.273 *	115	853	3200	0.323 *	0	853	3200	0.323 *	0	853	3200	0.323 *
Sb Right	137	0	-	0	137	0	-	0	137	0	-	43	180	0	-	0	180	0	-	0	180	0	-
Eb Left	14	1600	0.009 *	0	14	1600	0.009 *	0	14	1600	0.009 *	26	40	1600	0.025 *	0	40	1600	0.025 *	0	40	1600	0.025 *
Eb Thru	539	3200	0.193	12	551	3200	0.197	0	551	3200	0.197	144	683	3200	0.247	12	695	3200	0.251	0	695	3200	0.251
Eb Right	79	0	-	0	79	0	-	0	79	0	-	28	107	0	-	0	107	0	-	0	107	0	-
Wb Left	194	1600	0.121	0	194	1600	0.121	0	194	1600	0.121	22	216	1600	0.135	0	216	1600	0.135	0	216	1600	0.135
Wb Thru	1001	3200	0.329 *	11	1012	3200	0.333 *	0	1012	3200	0.333 *	197	1198	3200	0.393 *	11	1209	3200	0.396 *	0	1209	3200	0.396 *
Wb Right	52	0	-	0	52	0	-	0	52	0	-	6	58	0	-	0	58	0	-	0	58	0	-
Yellow Allowance:			0.100 *				0.100 *				0.100 *				0.100 *				0.100 *				0.100 *
ICU			0.776				0.780				0.780				0.924				0.927				0.927
LOS			C				C				C				E				E				E

** Key conflicting movement as a part of ICU*
1 Counts conducted by: City Traffic Counters
2 Capacity expressed in veh/hour of green

LINSCOTT, LAW & GREENSPAN, ENGINEERS
600 S. Lake Avenue, Suite 500, Pasadena CA 91106
(626) 796.2322 Fax (626) 792-0941

INTERSECTION CAPACITY UTILIZATION

N-S St: Walnut Grove Avenue
E-W St: Valley Boulevard
Project: Flair Spectrum Project/1-14-4074-1
File: ICU2

Walnut Grove Avenue @ Valley Boulevard
Peak hr: PM
Annual Growth: 0.52%

General Plan Buildout (Phases I & II)

Date: 09/15/2014
Date of Count: 2014
Projection Year: 2035

	2014 EXIST. TRAFFIC			2014 EXISTING WITH PROJECT				2014 EXIST. W/PROJECT + MITIGATION				2035 FUTURE WITHOUT PROJECT				2035 FUTURE WITH PROJECT				2035 FUTURE W/PROJECT + MITIGATION			
	1	2	V/C	Added	Total	2	V/C	Added	Total	2	V/C	Added	Total	2	V/C	Added	Total	2	V/C	Added	Total	2	V/C
Movement	Volume	Capacity	Ratio	Volume	Volume	Capacity	Ratio	Volume	Volume	Capacity	Ratio	Volume	Volume	Capacity	Ratio	Volume	Volume	Capacity	Ratio	Volume	Volume	Capacity	Ratio
Nb Left	134	1600	0.084	0	134	1600	0.084	0	134	1600	0.084	42	176	1600	0.110 *	0	176	1600	0.110 *	0	176	1600	0.110 *
Nb Thru	688	3200	0.270 *	0	688	3200	0.270 *	0	688	3200	0.270 *	98	786	3200	0.307	0	786	3200	0.307	0	786	3200	0.307
Nb Right	177	0	-	0	177	0	-	0	177	0	-	20	197	0	-	0	197	0	-	0	197	0	-
Sb Left	58	1600	0.036 *	0	58	1600	0.036 *	0	58	1600	0.036 *	7	65	1600	0.040	0	65	1600	0.040	0	65	1600	0.040
Sb Thru	549	3200	0.201	0	549	3200	0.201	0	549	3200	0.201	82	631	3200	0.241 *	0	631	3200	0.241 *	0	631	3200	0.241 *
Sb Right	93	0	-	0	93	0	-	0	93	0	-	47	140	0	-	0	140	0	-	0	140	0	-
Eb Left	117	1600	0.073	0	117	1600	0.073	0	117	1600	0.073	42	159	1600	0.100	0	159	1600	0.100	0	159	1600	0.100
Eb Thru	924	3200	0.325 *	23	947	3200	0.333 *	0	947	3200	0.333 *	199	1123	3200	0.398 *	23	1146	3200	0.405 *	0	1146	3200	0.405 *
Eb Right	117	0	-	0	117	0	-	0	117	0	-	32	149	0	-	0	149	0	-	0	149	0	-
Wb Left	175	1600	0.109 *	0	175	1600	0.109 *	0	175	1600	0.109 *	20	195	1600	0.122 *	0	195	1600	0.122 *	0	195	1600	0.122 *
Wb Thru	680	3200	0.231	21	701	3200	0.238	0	701	3200	0.238	185	865	3200	0.291	21	886	3200	0.298	0	886	3200	0.298
Wb Right	59	0	-	0	59	0	-	0	59	0	-	7	66	0	-	0	66	0	-	0	66	0	-
Yellow Allowance:			0.100 *				0.100 *				0.100 *				0.100 *				0.100 *				0.100 *
ICU			0.841				0.848				0.848				0.971				0.978				0.978
LOS			D				D				D				E				E				E

** Key conflicting movement as a part of ICU*
1 Counts conducted by: City Traffic Counters
2 Capacity expressed in veh/hour of green

LINSCOTT, LAW & GREENSPAN, ENGINEERS
600 S. Lake Avenue, Suite 500, Pasadena CA 91106
(626) 796.2322 Fax (626) 792-0941

INTERSECTION CAPACITY UTILIZATION

N-S St: Walnut Grove Avenue
E-W St: Valley Boulevard
Project: Flair Spectrum Project/1-14-4074-1
File: ICU2

Walnut Grove Avenue @ Valley Boulevard
Peak hr: SAT MID-DAY
Annual Growth: 0.52%

General Plan Buildout (Phases I & II)

Date: 09/15/2014
Date of Count: 2014
Projection Year: 2035

	2014 EXIST. TRAFFIC			2014 EXISTING WITH PROJECT				2014 EXIST. W/PROJECT + MITIGATION				2035 FUTURE WITHOUT PROJECT				2035 FUTURE WITH PROJECT				2035 FUTURE W/PROJECT + MITIGATION			
	1	2	V/C	Added	Total	2	V/C	Added	Total	2	V/C	Added	Total	2	V/C	Added	Total	2	V/C	Added	Total	2	V/C
Movement	Volume	Capacity	Ratio	Volume	Volume	Capacity	Ratio	Volume	Volume	Capacity	Ratio	Volume	Volume	Capacity	Ratio	Volume	Volume	Capacity	Ratio	Volume	Volume	Capacity	Ratio
Nb Left	149	1600	0.093 *	0	149	1600	0.093 *	0	149	1600	0.093 *	45	194	1600	0.121 *	0	194	1600	0.121 *	0	194	1600	0.121 *
Nb Thru	410	3200	0.183	0	410	3200	0.183	0	410	3200	0.183	65	475	3200	0.209	0	475	3200	0.209	0	475	3200	0.209
Nb Right	174	0	-	0	174	0	-	0	174	0	-	20	194	0	-	0	194	0	-	0	194	0	-
Sb Left	46	1600	0.029	0	46	1600	0.029	0	46	1600	0.029	5	51	1600	0.032	0	51	1600	0.032	0	51	1600	0.032
Sb Thru	468	3200	0.186 *	0	468	3200	0.186 *	0	468	3200	0.186 *	73	541	3200	0.227 *	0	541	3200	0.227 *	0	541	3200	0.227 *
Sb Right	126	0	-	0	126	0	-	0	126	0	-	58	184	0	-	0	184	0	-	0	184	0	-
Eb Left	102	1600	0.064	0	102	1600	0.064	0	102	1600	0.064	50	152	1600	0.095	0	152	1600	0.095	0	152	1600	0.095
Eb Thru	830	3200	0.314 *	36	866	3200	0.325 *	0	866	3200	0.325 *	207	1037	3200	0.393 *	36	1073	3200	0.404 *	0	1073	3200	0.404 *
Eb Right	175	0	-	0	175	0	-	0	175	0	-	45	220	0	-	0	220	0	-	0	220	0	-
Wb Left	152	1600	0.095 *	0	152	1600	0.095 *	0	152	1600	0.095 *	17	169	1600	0.106 *	0	169	1600	0.106 *	0	169	1600	0.106 *
Wb Thru	887	3200	0.291	32	919	3200	0.301	0	919	3200	0.301	221	1108	3200	0.362	32	1140	3200	0.372	0	1140	3200	0.372
Wb Right	45	0	-	0	45	0	-	0	45	0	-	5	50	0	-	0	50	0	-	0	50	0	-
Yellow Allowance:			0.100 *				0.100 *				0.100 *				0.100 *				0.100 *				0.100 *
ICU			0.788				0.799				0.799				0.947				0.958				0.958
LOS			C				C				C				E				E				E

** Key conflicting movement as a part of ICU*
1 Counts conducted by: City Traffic Counters
2 Capacity expressed in veh/hour of green

LINSCOTT, LAW & GREENSPAN, ENGINEERS
600 S. Lake Avenue, Suite 500, Pasadena CA 91106
(626) 796.2322 Fax (626) 792-0941

INTERSECTION CAPACITY UTILIZATION

Walnut Grove Avenue @ Garvey Avenue
Peak hr: AM
Annual Growth: 0.82%

Phase I

N-S St: Walnut Grove Avenue
E-W St: Garvey Avenue
Project: Flair Spectrum Project/1-14-4074-1
File: ICU3

Date: 09/15/2014
Date of Count: 2014
Projection Year: 2016

	2014 EXIST. TRAFFIC			2014 EXISTING WITH PROJECT				2014 EXIST. W/PROJECT + MITIGATION				2016 FUTURE WITHOUT PROJECT				2016 FUTURE WITH PROJECT				2016 FUTURE W/PROJECT + MITIGATION			
	1	2	V/C	Added	Total	2	V/C	Added	Total	2	V/C	Added	Total	2	V/C	Added	Total	2	V/C	Added	Total	2	V/C
Movement	Volume	Capacity	Ratio	Volume	Volume	Capacity	Ratio	Volume	Volume	Capacity	Ratio	Volume	Volume	Capacity	Ratio	Volume	Volume	Capacity	Ratio	Volume	Volume	Capacity	Ratio
Nb Left	114	1600	0.071 *	0	114	1600	0.071 *	0	114	1600	0.071 *	18	132	1600	0.082 *	0	132	1600	0.082 *	0	132	1600	0.082 *
Nb Thru	351	3200	0.130	0	351	3200	0.130	0	351	3200	0.130	6	357	3200	0.134	0	357	3200	0.134	0	357	3200	0.134
Nb Right	66	0	-	0	66	0	-	0	66	0	-	5	71	0	-	0	71	0	-	0	71	0	-
Sb Left	190	1600	0.119	0	190	1600	0.119	0	190	1600	0.119	12	202	1600	0.126	0	202	1600	0.126	0	202	1600	0.126
Sb Thru	687	3200	0.248 *	0	687	3200	0.248 *	0	687	3200	0.248 *	11	698	3200	0.264 *	0	698	3200	0.264 *	0	698	3200	0.264 *
Sb Right	107	0	-	0	107	0	-	0	107	0	-	41	148	0	-	0	148	0	-	0	148	0	-
Eb Left	92	1600	0.058	0	92	1600	0.058	0	92	1600	0.058	39	131	1600	0.082	0	131	1600	0.082	0	131	1600	0.082
Eb Thru	825	3200	0.277 *	7	832	3200	0.279 *	0	832	3200	0.279 *	91	916	3200	0.310 *	7	923	3200	0.312 *	0	923	3200	0.312 *
Eb Right	61	0	-	0	61	0	-	0	61	0	-	16	77	0	-	0	77	0	-	0	77	0	-
Wb Left	121	1600	0.076 *	0	121	1600	0.076 *	0	121	1600	0.076 *	4	125	1600	0.078 *	0	125	1600	0.078 *	0	125	1600	0.078 *
Wb Thru	753	3200	0.264	3	756	3200	0.265	0	756	3200	0.265	84	837	3200	0.292	3	840	3200	0.293	0	840	3200	0.293
Wb Right	92	0	-	0	92	0	-	0	92	0	-	5	97	0	-	0	97	0	-	0	97	0	-
Yellow Allowance:			0.100 *				0.100 *				0.100 *				0.100 *				0.100 *				0.100 *
ICU			0.772				0.774				0.774				0.835				0.837				0.837
LOS			C				C				C				D				D				D

** Key conflicting movement as a part of ICU*
1 Counts conducted by: City Traffic Counters
2 Capacity expressed in veh/hour of green

LINSCOTT, LAW & GREENSPAN, ENGINEERS
600 S. Lake Avenue, Suite 500, Pasadena CA 91106
(626) 796.2322 Fax (626) 792-0941

INTERSECTION CAPACITY UTILIZATION

Walnut Grove Avenue @ Garvey Avenue
Peak hr: PM
Annual Growth: 0.82%

Phase I

N-S St: Walnut Grove Avenue
E-W St: Garvey Avenue
Project: Flair Spectrum Project/1-14-4074-1
File: ICU3

Date: 09/15/2014
Date of Count: 2014
Projection Year: 2016

	2014 EXIST. TRAFFIC			2014 EXISTING WITH PROJECT				2014 EXIST. W/PROJECT + MITIGATION				2016 FUTURE WITHOUT PROJECT				2016 FUTURE WITH PROJECT				2016 FUTURE W/PROJECT + MITIGATION			
	1	2	V/C	Added	Total	2	V/C	Added	Total	2	V/C	Added	Total	2	V/C	Added	Total	2	V/C	Added	Total	2	V/C
Movement	Volume	Capacity	Ratio	Volume	Volume	Capacity	Ratio	Volume	Volume	Capacity	Ratio	Volume	Volume	Capacity	Ratio	Volume	Volume	Capacity	Ratio	Volume	Volume	Capacity	Ratio
Nb Left	122	1600	0.076	0	122	1600	0.076	0	122	1600	0.076	32	154	1600	0.096	0	154	1600	0.096	0	154	1600	0.096
Nb Thru	813	3200	0.299 *	0	813	3200	0.299 *	0	813	3200	0.299 *	13	826	3200	0.304 *	0	826	3200	0.304 *	0	826	3200	0.304 *
Nb Right	143	0	-	0	143	0	-	0	143	0	-	4	147	0	-	0	147	0	-	0	147	0	-
Sb Left	168	1600	0.105 *	0	168	1600	0.105 *	0	168	1600	0.105 *	7	175	1600	0.109 *	0	175	1600	0.109 *	0	175	1600	0.109 *
Sb Thru	510	3200	0.192	0	510	3200	0.192	0	510	3200	0.192	8	518	3200	0.218	0	518	3200	0.218	0	518	3200	0.218
Sb Right	104	0	-	0	104	0	-	0	104	0	-	76	180	0	-	0	180	0	-	0	180	0	-
Eb Left	136	1600	0.085 *	0	136	1600	0.085 *	0	136	1600	0.085 *	66	202	1600	0.126 *	0	202	1600	0.126 *	0	202	1600	0.126 *
Eb Thru	810	3200	0.276	11	821	3200	0.279	0	821	3200	0.279	123	933	3200	0.323	11	944	3200	0.326	0	944	3200	0.326
Eb Right	72	0	-	0	72	0	-	0	72	0	-	27	99	0	-	0	99	0	-	0	99	0	-
Wb Left	138	1600	0.086	0	138	1600	0.086	0	138	1600	0.086	7	145	1600	0.091	0	145	1600	0.091	0	145	1600	0.091
Wb Thru	861	3200	0.349 *	12	873	3200	0.353 *	0	873	3200	0.353 *	143	1004	3200	0.399 *	12	1016	3200	0.402 *	0	1016	3200	0.402 *
Wb Right	256	0	-	0	256	0	-	0	256	0	-	15	271	0	-	0	271	0	-	0	271	0	-
Yellow Allowance:			0.100 *				0.100 *				0.100 *				0.100 *				0.100 *				0.100 *
ICU			0.938				0.942				0.942				1.038				1.042				1.042
LOS			E				E				E				F				F				F

** Key conflicting movement as a part of ICU*
1 Counts conducted by: City Traffic Counters
2 Capacity expressed in veh/hour of green

LINSCOTT, LAW & GREENSPAN, ENGINEERS
600 S. Lake Avenue, Suite 500, Pasadena CA 91106
(626) 796.2322 Fax (626) 792-0941

INTERSECTION CAPACITY UTILIZATION

Walnut Grove Avenue @ Garvey Avenue
Peak hr: SAT MID-DAY
Annual Growth: 0.82%

Phase I

N-S St: Walnut Grove Avenue
E-W St: Garvey Avenue
Project: Flair Spectrum Project/1-14-4074-1
File: ICU3

Date: 09/15/2014
Date of Count: 2014
Projection Year: 2016

	2014 EXIST. TRAFFIC			2014 EXISTING WITH PROJECT				2014 EXIST. W/PROJECT + MITIGATION				2016 FUTURE WITHOUT PROJECT				2016 FUTURE WITH PROJECT				2016 FUTURE W/PROJECT + MITIGATION			
	1	2	V/C	Added	Total	2	V/C	Added	Total	2	V/C	Added	Total	2	V/C	Added	Total	2	V/C	Added	Total	2	V/C
Movement	Volume	Capacity	Ratio	Volume	Volume	Capacity	Ratio	Volume	Volume	Capacity	Ratio	Volume	Volume	Capacity	Ratio	Volume	Volume	Capacity	Ratio	Volume	Volume	Capacity	Ratio
Nb Left	98	1600	0.061	0	98	1600	0.061	0	98	1600	0.061	36	134	1600	0.084 *	0	134	1600	0.084 *	0	134	1600	0.084 *
Nb Thru	405	3200	0.159 *	0	405	3200	0.159 *	0	405	3200	0.159 *	7	412	3200	0.162	0	412	3200	0.162	0	412	3200	0.162
Nb Right	104	0	-	0	104	0	-	0	104	0	-	4	108	0	-	0	108	0	-	0	108	0	-
Sb Left	195	1600	0.122 *	0	195	1600	0.122 *	0	195	1600	0.122 *	7	202	1600	0.126	0	202	1600	0.126	0	202	1600	0.126
Sb Thru	448	3200	0.179	0	448	3200	0.179	0	448	3200	0.179	7	455	3200	0.208 *	0	455	3200	0.208 *	0	455	3200	0.208 *
Sb Right	124	0	-	0	124	0	-	0	124	0	-	87	211	0	-	0	211	0	-	0	211	0	-
Eb Left	162	1600	0.101 *	0	162	1600	0.101 *	0	162	1600	0.101 *	81	243	1600	0.152 *	0	243	1600	0.152 *	0	243	1600	0.152 *
Eb Thru	701	3200	0.250	21	722	3200	0.257	0	722	3200	0.257	128	829	3200	0.300	21	850	3200	0.307	0	850	3200	0.307
Eb Right	100	0	-	0	100	0	-	0	100	0	-	33	133	0	-	0	133	0	-	0	133	0	-
Wb Left	124	1600	0.078	0	124	1600	0.078	0	124	1600	0.078	4	128	1600	0.080	0	128	1600	0.080	0	128	1600	0.080
Wb Thru	754	3200	0.282 *	19	773	3200	0.288 *	0	773	3200	0.288 *	134	888	3200	0.326 *	19	907	3200	0.332 *	0	907	3200	0.332 *
Wb Right	149	0	-	0	149	0	-	0	149	0	-	5	154	0	-	0	154	0	-	0	154	0	-
Yellow Allowance:			0.100 *				0.100 *				0.100 *				0.100 *				0.100 *				0.100 *
ICU			0.764				0.770				0.770				0.869				0.875				0.875
LOS			C				C				C				D				D				D

** Key conflicting movement as a part of ICU*
1 Counts conducted by: City Traffic Counters
2 Capacity expressed in veh/hour of green

LINSCOTT, LAW & GREENSPAN, ENGINEERS
600 S. Lake Avenue, Suite 500, Pasadena CA 91106
(626) 796.2322 Fax (626) 792-0941

INTERSECTION CAPACITY UTILIZATION

Walnut Grove Avenue @ Garvey Avenue
Peak hr: AM
Annual Growth: 0.82%

Phases I & II

N-S St: Walnut Grove Avenue
E-W St: Garvey Avenue
Project: Flair Spectrum Project/1-14-4074-1
File: ICU3

Date: 09/15/2014
Date of Count: 2014
Projection Year: 2019

	2014 EXIST. TRAFFIC			2014 EXISTING WITH PROJECT				2014 EXIST. W/PROJECT + MITIGATION				2019 FUTURE WITHOUT PROJECT				2019 FUTURE WITH PROJECT				2019 FUTURE W/PROJECT + MITIGATION			
	1	2	V/C	Added	Total	2	V/C	Added	Total	2	V/C	Added	Total	2	V/C	Added	Total	2	V/C	Added	Total	2	V/C
Movement	Volume	Capacity	Ratio	Volume	Volume	Capacity	Ratio	Volume	Volume	Capacity	Ratio	Volume	Volume	Capacity	Ratio	Volume	Volume	Capacity	Ratio	Volume	Volume	Capacity	Ratio
Nb Left	114	1600	0.071 *	0	114	1600	0.071 *	0	114	1600	0.071 *	21	135	1600	0.084 *	0	135	1600	0.084 *	0	135	1600	0.084 *
Nb Thru	351	3200	0.130	0	351	3200	0.130	0	351	3200	0.130	15	366	3200	0.137	0	366	3200	0.137	0	366	3200	0.137
Nb Right	66	0	-	0	66	0	-	0	66	0	-	7	73	0	-	0	73	0	-	0	73	0	-
Sb Left	190	1600	0.119	0	190	1600	0.119	0	190	1600	0.119	17	207	1600	0.129	0	207	1600	0.129	0	207	1600	0.129
Sb Thru	687	3200	0.248 *	0	687	3200	0.248 *	0	687	3200	0.248 *	29	716	3200	0.271 *	0	716	3200	0.271 *	0	716	3200	0.271 *
Sb Right	107	0	-	0	107	0	-	0	107	0	-	43	150	0	-	0	150	0	-	0	150	0	-
Eb Left	92	1600	0.058	0	92	1600	0.058	0	92	1600	0.058	41	133	1600	0.083	0	133	1600	0.083	0	133	1600	0.083
Eb Thru	825	3200	0.277 *	8	833	3200	0.279 *	0	833	3200	0.279 *	111	936	3200	0.317 *	8	944	3200	0.320 *	0	944	3200	0.320 *
Eb Right	61	0	-	0	61	0	-	0	61	0	-	18	79	0	-	0	79	0	-	0	79	0	-
Wb Left	121	1600	0.076 *	0	121	1600	0.076 *	0	121	1600	0.076 *	7	128	1600	0.080 *	0	128	1600	0.080 *	0	128	1600	0.080 *
Wb Thru	753	3200	0.264	9	762	3200	0.267	0	762	3200	0.267	103	856	3200	0.299	9	865	3200	0.301	0	865	3200	0.301
Wb Right	92	0	-	0	92	0	-	0	92	0	-	7	99	0	-	0	99	0	-	0	99	0	-
Yellow Allowance:			0.100 *				0.100 *				0.100 *				0.100 *				0.100 *				0.100 *
ICU			0.772				0.774				0.774				0.852				0.855				0.855
LOS			C				C				C				D				D				D

** Key conflicting movement as a part of ICU*
1 Counts conducted by: City Traffic Counters
2 Capacity expressed in veh/hour of green

LINSCOTT, LAW & GREENSPAN, ENGINEERS
600 S. Lake Avenue, Suite 500, Pasadena CA 91106
(626) 796.2322 Fax (626) 792-0941

INTERSECTION CAPACITY UTILIZATION

Walnut Grove Avenue @ Garvey Avenue
Peak hr: PM
Annual Growth: 0.82%

Phases I & II

N-S St: Walnut Grove Avenue
E-W St: Garvey Avenue
Project: Flair Spectrum Project/1-14-4074-1
File: ICU3

Date: 09/15/2014
Date of Count: 2014
Projection Year: 2019

	2014 EXIST. TRAFFIC			2014 EXISTING WITH PROJECT				2014 EXIST. W/PROJECT + MITIGATION				2019 FUTURE WITHOUT PROJECT				2019 FUTURE WITH PROJECT				2019 FUTURE W/PROJECT + MITIGATION			
	1	2	V/C	Added	Total	2	V/C	Added	Total	2	V/C	Added	Total	2	V/C	Added	Total	2	V/C	Added	Total	2	V/C
Movement	Volume	Capacity	Ratio	Volume	Volume	Capacity	Ratio	Volume	Volume	Capacity	Ratio	Volume	Volume	Capacity	Ratio	Volume	Volume	Capacity	Ratio	Volume	Volume	Capacity	Ratio
Nb Left	122	1600	0.076	0	122	1600	0.076	0	122	1600	0.076	35	157	1600	0.098	0	157	1600	0.098	0	157	1600	0.098
Nb Thru	813	3200	0.299 *	0	813	3200	0.299 *	0	813	3200	0.299 *	34	847	3200	0.312 *	0	847	3200	0.312 *	0	847	3200	0.312 *
Nb Right	143	0	-	0	143	0	-	0	143	0	-	8	151	0	-	0	151	0	-	0	151	0	-
Sb Left	168	1600	0.105 *	0	168	1600	0.105 *	0	168	1600	0.105 *	11	179	1600	0.112 *	0	179	1600	0.112 *	0	179	1600	0.112 *
Sb Thru	510	3200	0.192	0	510	3200	0.192	0	510	3200	0.192	21	531	3200	0.223	0	531	3200	0.223	0	531	3200	0.223
Sb Right	104	0	-	0	104	0	-	0	104	0	-	78	182	0	-	0	182	0	-	0	182	0	-
Eb Left	136	1600	0.085 *	0	136	1600	0.085 *	0	136	1600	0.085 *	70	206	1600	0.129 *	0	206	1600	0.129 *	0	206	1600	0.129 *
Eb Thru	810	3200	0.276	16	826	3200	0.281	0	826	3200	0.281	144	954	3200	0.330	16	970	3200	0.335	0	970	3200	0.335
Eb Right	72	0	-	0	72	0	-	0	72	0	-	29	101	0	-	0	101	0	-	0	101	0	-
Wb Left	138	1600	0.086	0	138	1600	0.086	0	138	1600	0.086	11	149	1600	0.093	0	149	1600	0.093	0	149	1600	0.093
Wb Thru	861	3200	0.349 *	15	876	3200	0.354 *	0	876	3200	0.354 *	165	1026	3200	0.407 *	15	1041	3200	0.412 *	0	1041	3200	0.412 *
Wb Right	256	0	-	0	256	0	-	0	256	0	-	22	278	0	-	0	278	0	-	0	278	0	-
Yellow Allowance:			0.100 *				0.100 *				0.100 *				0.100 *				0.100 *				0.100 *
ICU			0.938				0.943				0.943				1.060				1.064				1.064
LOS			E				E				E				F				F				F

** Key conflicting movement as a part of ICU*
1 Counts conducted by: City Traffic Counters
2 Capacity expressed in veh/hour of green

LINSCOTT, LAW & GREENSPAN, ENGINEERS
600 S. Lake Avenue, Suite 500, Pasadena CA 91106
(626) 796.2322 Fax (626) 792-0941

INTERSECTION CAPACITY UTILIZATION

Walnut Grove Avenue @ Garvey Avenue
Peak hr: SAT MID-DAY
Annual Growth: 0.82%

Phases I & II

N-S St: Walnut Grove Avenue
E-W St: Garvey Avenue
Project: Flair Spectrum Project/1-14-4074-1
File: ICU3

Date: 09/15/2014
Date of Count: 2014
Projection Year: 2019

	2014 EXIST. TRAFFIC			2014 EXISTING WITH PROJECT				2014 EXIST. W/PROJECT + MITIGATION				2019 FUTURE WITHOUT PROJECT				2019 FUTURE WITH PROJECT				2019 FUTURE W/PROJECT + MITIGATION			
	1	2	V/C	Added	Total	2	V/C	Added	Total	2	V/C	Added	Total	2	V/C	Added	Total	2	V/C	Added	Total	2	V/C
Movement	Volume	Capacity	Ratio	Volume	Volume	Capacity	Ratio	Volume	Volume	Capacity	Ratio	Volume	Volume	Capacity	Ratio	Volume	Volume	Capacity	Ratio	Volume	Volume	Capacity	Ratio
Nb Left	98	1600	0.061	0	98	1600	0.061	0	98	1600	0.061	38	136	1600	0.085 *	0	136	1600	0.085 *	0	136	1600	0.085 *
Nb Thru	405	3200	0.159 *	0	405	3200	0.159 *	0	405	3200	0.159 *	17	422	3200	0.166	0	422	3200	0.166	0	422	3200	0.166
Nb Right	104	0	-	0	104	0	-	0	104	0	-	6	110	0	-	0	110	0	-	0	110	0	-
Sb Left	195	1600	0.122 *	0	195	1600	0.122 *	0	195	1600	0.122 *	12	207	1600	0.129	0	207	1600	0.129	0	207	1600	0.129
Sb Thru	448	3200	0.179	0	448	3200	0.179	0	448	3200	0.179	19	467	3200	0.213 *	0	467	3200	0.213 *	0	467	3200	0.213 *
Sb Right	124	0	-	0	124	0	-	0	124	0	-	90	214	0	-	0	214	0	-	0	214	0	-
Eb Left	162	1600	0.101 *	0	162	1600	0.101 *	0	162	1600	0.101 *	85	247	1600	0.154 *	0	247	1600	0.154 *	0	247	1600	0.154 *
Eb Thru	701	3200	0.250	25	726	3200	0.258	0	726	3200	0.258	145	846	3200	0.307	25	871	3200	0.314	0	871	3200	0.314
Eb Right	100	0	-	0	100	0	-	0	100	0	-	35	135	0	-	0	135	0	-	0	135	0	-
Wb Left	124	1600	0.078	0	124	1600	0.078	0	124	1600	0.078	7	131	1600	0.082	0	131	1600	0.082	0	131	1600	0.082
Wb Thru	754	3200	0.282 *	22	776	3200	0.289 *	0	776	3200	0.289 *	153	907	3200	0.333 *	22	929	3200	0.340 *	0	929	3200	0.340 *
Wb Right	149	0	-	0	149	0	-	0	149	0	-	9	158	0	-	0	158	0	-	0	158	0	-
Yellow Allowance:			0.100 *				0.100 *				0.100 *				0.100 *				0.100 *				0.100 *
ICU			0.764				0.771				0.771				0.885				0.892				0.892
LOS			C				C				C				D				D				D

** Key conflicting movement as a part of ICU*
1 Counts conducted by: City Traffic Counters
2 Capacity expressed in veh/hour of green

LINSCOTT, LAW & GREENSPAN, ENGINEERS
600 S. Lake Avenue, Suite 500, Pasadena CA 91106
(626) 796.2322 Fax (626) 792-0941

INTERSECTION CAPACITY UTILIZATION

N-S St: Walnut Grove Avenue
E-W St: Garvey Avenue
Project: Flair Spectrum Project/1-14-4074-1
File: ICU3

Walnut Grove Avenue @ Garvey Avenue
Peak hr: AM
Annual Growth: 0.52%

General Plan Buildout (Phases I & II)

Date: 09/15/2014
Date of Count: 2014
Projection Year: 2035

	2014 EXIST. TRAFFIC			2014 EXISTING WITH PROJECT				2014 EXIST. W/PROJECT + MITIGATION				2035 FUTURE WITHOUT PROJECT				2035 FUTURE WITH PROJECT				2035 FUTURE W/PROJECT + MITIGATION			
	1	2	V/C	Added	Total	2	V/C	Added	Total	2	V/C	Added	Total	2	V/C	Added	Total	2	V/C	Added	Total	2	V/C
Movement	Volume	Capacity	Ratio	Volume	Volume	Capacity	Ratio	Volume	Volume	Capacity	Ratio	Volume	Volume	Capacity	Ratio	Volume	Volume	Capacity	Ratio	Volume	Volume	Capacity	Ratio
Nb Left	114	1600	0.071 *	0	114	1600	0.071 *	0	114	1600	0.071 *	29	143	1600	0.089 *	0	143	1600	0.089 *	0	143	1600	0.089 *
Nb Thru	351	3200	0.130	0	351	3200	0.130	0	351	3200	0.130	40	391	3200	0.147	0	391	3200	0.147	0	391	3200	0.147
Nb Right	66	0	-	0	66	0	-	0	66	0	-	12	78	0	-	0	78	0	-	0	78	0	-
Sb Left	190	1600	0.119	0	190	1600	0.119	0	190	1600	0.119	31	221	1600	0.138	0	221	1600	0.138	0	221	1600	0.138
Sb Thru	687	3200	0.248 *	0	687	3200	0.248 *	0	687	3200	0.248 *	79	766	3200	0.289 *	0	766	3200	0.289 *	0	766	3200	0.289 *
Sb Right	107	0	-	0	107	0	-	0	107	0	-	51	158	0	-	0	158	0	-	0	158	0	-
Eb Left	92	1600	0.058	0	92	1600	0.058	0	92	1600	0.058	48	140	1600	0.087	0	140	1600	0.087	0	140	1600	0.087
Eb Thru	825	3200	0.277 *	8	833	3200	0.279 *	0	833	3200	0.279 *	172	997	3200	0.337 *	8	1005	3200	0.340 *	0	1005	3200	0.340 *
Eb Right	61	0	-	0	61	0	-	0	61	0	-	22	83	0	-	0	83	0	-	0	83	0	-
Wb Left	121	1600	0.076 *	0	121	1600	0.076 *	0	121	1600	0.076 *	16	137	1600	0.086 *	0	137	1600	0.086 *	0	137	1600	0.086 *
Wb Thru	753	3200	0.264	9	762	3200	0.267	0	762	3200	0.267	159	912	3200	0.318	9	921	3200	0.321	0	921	3200	0.321
Wb Right	92	0	-	0	92	0	-	0	92	0	-	14	106	0	-	0	106	0	-	0	106	0	-
Yellow Allowance:			0.100 *				0.100 *				0.100 *				0.100 *				0.100 *				0.100 *
ICU			0.772				0.774				0.774				0.901				0.904				0.904
LOS			C				C				C				E				E				E

** Key conflicting movement as a part of ICU*
1 Counts conducted by: City Traffic Counters
2 Capacity expressed in veh/hour of green

LINSCOTT, LAW & GREENSPAN, ENGINEERS
600 S. Lake Avenue, Suite 500, Pasadena CA 91106
(626) 796.2322 Fax (626) 792-0941

INTERSECTION CAPACITY UTILIZATION

N-S St: Walnut Grove Avenue
E-W St: Garvey Avenue
Project: Flair Spectrum Project/1-14-4074-1
File: ICU3

Walnut Grove Avenue @ Garvey Avenue
Peak hr: PM
Annual Growth: 0.52%

General Plan Buildout (Phases I & II)

Date: 09/15/2014
Date of Count: 2014
Projection Year: 2035

	2014 EXIST. TRAFFIC			2014 EXISTING WITH PROJECT				2014 EXIST. W/PROJECT + MITIGATION				2035 FUTURE WITHOUT PROJECT				2035 FUTURE WITH PROJECT				2035 FUTURE W/PROJECT + MITIGATION			
	1	2	V/C	Added	Total	2	V/C	Added	Total	2	V/C	Added	Total	2	V/C	Added	Total	2	V/C	Added	Total	2	V/C
Movement	Volume	Capacity	Ratio	Volume	Volume	Capacity	Ratio	Volume	Volume	Capacity	Ratio	Volume	Volume	Capacity	Ratio	Volume	Volume	Capacity	Ratio	Volume	Volume	Capacity	Ratio
Nb Left	122	1600	0.076	0	122	1600	0.076	0	122	1600	0.076	44	166	1600	0.104	0	166	1600	0.104	0	166	1600	0.104
Nb Thru	813	3200	0.299 *	0	813	3200	0.299 *	0	813	3200	0.299 *	94	907	3200	0.334 *	0	907	3200	0.334 *	0	907	3200	0.334 *
Nb Right	143	0	-	0	143	0	-	0	143	0	-	18	161	0	-	0	161	0	-	0	161	0	-
Sb Left	168	1600	0.105 *	0	168	1600	0.105 *	0	168	1600	0.105 *	23	191	1600	0.120 *	0	191	1600	0.120 *	0	191	1600	0.120 *
Sb Thru	510	3200	0.192	0	510	3200	0.192	0	510	3200	0.192	59	569	3200	0.237	0	569	3200	0.237	0	569	3200	0.237
Sb Right	104	0	-	0	104	0	-	0	104	0	-	86	190	0	-	0	190	0	-	0	190	0	-
Eb Left	136	1600	0.085 *	0	136	1600	0.085 *	0	136	1600	0.085 *	80	216	1600	0.135 *	0	216	1600	0.135 *	0	216	1600	0.135 *
Eb Thru	810	3200	0.276	16	826	3200	0.281	0	826	3200	0.281	203	1013	3200	0.350	16	1029	3200	0.355	0	1029	3200	0.355
Eb Right	72	0	-	0	72	0	-	0	72	0	-	34	106	0	-	0	106	0	-	0	106	0	-
Wb Left	138	1600	0.086	0	138	1600	0.086	0	138	1600	0.086	21	159	1600	0.099	0	159	1600	0.099	0	159	1600	0.099
Wb Thru	861	3200	0.349 *	15	876	3200	0.354 *	0	876	3200	0.354 *	228	1089	3200	0.433 *	15	1104	3200	0.438 *	0	1104	3200	0.438 *
Wb Right	256	0	-	0	256	0	-	0	256	0	-	40	296	0	-	0	296	0	-	0	296	0	-
Yellow Allowance:			0.100 *				0.100 *				0.100 *				0.100 *				0.100 *				0.100 *
ICU			0.938				0.943				0.943				1.121				1.126				1.126
LOS			E				E				E				F				F				F

** Key conflicting movement as a part of ICU*
1 Counts conducted by: City Traffic Counters
2 Capacity expressed in veh/hour of green

LINSCOTT, LAW & GREENSPAN, ENGINEERS
600 S. Lake Avenue, Suite 500, Pasadena CA 91106
(626) 796.2322 Fax (626) 792-0941

INTERSECTION CAPACITY UTILIZATION

N-S St: Walnut Grove Avenue
E-W St: Garvey Avenue
Project: Flair Spectrum Project/1-14-4074-1
File: ICU3

Walnut Grove Avenue @ Garvey Avenue
Peak hr: SAT MID-DAY
Annual Growth: 0.52%

General Plan Buildout (Phases I & II)

Date: 09/15/2014
Date of Count: 2014
Projection Year: 2035

	2014 EXIST. TRAFFIC			2014 EXISTING WITH PROJECT				2014 EXIST. W/PROJECT + MITIGATION				2035 FUTURE WITHOUT PROJECT				2035 FUTURE WITH PROJECT				2035 FUTURE W/PROJECT + MITIGATION			
	1	2	V/C	Added	Total	2	V/C	Added	Total	2	V/C	Added	Total	2	V/C	Added	Total	2	V/C	Added	Total	2	V/C
Movement	Volume	Capacity	Ratio	Volume	Volume	Capacity	Ratio	Volume	Volume	Capacity	Ratio	Volume	Volume	Capacity	Ratio	Volume	Volume	Capacity	Ratio	Volume	Volume	Capacity	Ratio
Nb Left	98	1600	0.061	0	98	1600	0.061	0	98	1600	0.061	45	143	1600	0.090	0	143	1600	0.090	0	143	1600	0.090
Nb Thru	405	3200	0.159 *	0	405	3200	0.159 *	0	405	3200	0.159 *	47	452	3200	0.178 *	0	452	3200	0.178 *	0	452	3200	0.178 *
Nb Right	104	0	-	0	104	0	-	0	104	0	-	14	118	0	-	0	118	0	-	0	118	0	-
Sb Left	195	1600	0.122 *	0	195	1600	0.122 *	0	195	1600	0.122 *	26	221	1600	0.138 *	0	221	1600	0.138 *	0	221	1600	0.138 *
Sb Thru	448	3200	0.179	0	448	3200	0.179	0	448	3200	0.179	52	500	3200	0.226	0	500	3200	0.226	0	500	3200	0.226
Sb Right	124	0	-	0	124	0	-	0	124	0	-	99	223	0	-	0	223	0	-	0	223	0	-
Eb Left	162	1600	0.101 *	0	162	1600	0.101 *	0	162	1600	0.101 *	97	259	1600	0.162 *	0	259	1600	0.162 *	0	259	1600	0.162 *
Eb Thru	701	3200	0.250	25	726	3200	0.258	0	726	3200	0.258	197	898	3200	0.325	25	923	3200	0.333	0	923	3200	0.333
Eb Right	100	0	-	0	100	0	-	0	100	0	-	43	143	0	-	0	143	0	-	0	143	0	-
Wb Left	124	1600	0.078	0	124	1600	0.078	0	124	1600	0.078	16	140	1600	0.088	0	140	1600	0.088	0	140	1600	0.088
Wb Thru	754	3200	0.282 *	22	776	3200	0.289 *	0	776	3200	0.289 *	209	963	3200	0.354 *	22	985	3200	0.361 *	0	985	3200	0.361 *
Wb Right	149	0	-	0	149	0	-	0	149	0	-	20	169	0	-	0	169	0	-	0	169	0	-
Yellow Allowance:			0.100 *				0.100 *				0.100 *				0.100 *				0.100 *				0.100 *
ICU			0.764				0.771				0.771				0.932				0.939				0.939
LOS			C				C				C				E				E				E

** Key conflicting movement as a part of ICU*
1 Counts conducted by: City Traffic Counters
2 Capacity expressed in veh/hour of green

LINSCOTT, LAW & GREENSPAN, ENGINEERS
600 S. Lake Avenue, Suite 500, Pasadena CA 91106
(626) 796.2322 Fax (626) 792-0941

INTERSECTION CAPACITY UTILIZATION

N-S St: Rosemead Boulevard (SR-164)
E-W St: Valley Boulevard
Project: Flair Spectrum Project/1-14-4074-1
File: ICU4

Rosemead Boulevard (SR-164) @ Valley Boulevard
Peak hr: AM
Annual Growth: 0.82%

Phase I

Date: 09/27/2014
Date of Count: 2014
Projection Year: 2016

	2014 EXIST. TRAFFIC			2014 EXISTING WITH PROJECT				2014 EXIST. W/PROJECT + MITIGATION				2016 FUTURE WITHOUT PROJECT				2016 FUTURE WITH PROJECT				2016 FUTURE W/PROJECT + MITIGATION			
	1	2	V/C	Added	Total	2	V/C	Added	Total	2	V/C	Added	Total	2	V/C	Added	Total	2	V/C	Added	Total	2	V/C
Movement	Volume	Capacity	Ratio	Volume	Volume	Capacity	Ratio	Volume	Volume	Capacity	Ratio	Volume	Volume	Capacity	Ratio	Volume	Volume	Capacity	Ratio	Volume	Volume	Capacity	Ratio
Nb Left	145	1600	0.091 *	5	150	1600	0.094 *	0	150	1600	0.094 *	5	150	1600	0.094 *	5	155	1600	0.097 *	0	155	1600	0.097 *
Nb Thru	1223	3200	0.382	6	1229	3200	0.384	0	1229	3200	0.384	52	1275	3200	0.398	6	1281	3200	0.400	0	1281	3200	0.400
Nb Right	90	1600	0.056	2	92	1600	0.058	0	92	1600	0.058	28	118	1600	0.074	2	120	1600	0.075	0	120	1600	0.075
Sb Left	39	1600	0.024	0	39	1600	0.024	0	39	1600	0.024	3	42	1600	0.026	0	42	1600	0.026	0	42	1600	0.026
Sb Thru	1278	3200	0.399 *	12	1290	3200	0.403 *	0	1290	3200	0.403 *	84	1362	3200	0.426 *	12	1374	3200	0.429 *	0	1374	3200	0.429 *
Sb Right	279	1600	0.174	0	279	1600	0.174	0	279	1600	0.174	35	314	1600	0.196	0	314	1600	0.196	0	314	1600	0.196
Eb Left	174	1600	0.109 *	0	174	1600	0.109 *	0	174	1600	0.109 *	28	202	1600	0.126 *	0	202	1600	0.126 *	0	202	1600	0.126 *
Eb Thru	335	3200	0.105	0	335	3200	0.105	0	335	3200	0.105	50	385	3200	0.120	0	385	3200	0.120	0	385	3200	0.120
Eb Right	132	1600	0.083	12	144	1600	0.090	0	144	1600	0.090	16	148	1600	0.093	12	160	1600	0.100	0	160	1600	0.100
Wb Left	212	1600	0.133	5	217	1600	0.136	0	217	1600	0.136	12	224	1600	0.140	5	229	1600	0.143	0	229	1600	0.143
Wb Thru	622	3200	0.194 *	0	622	3200	0.194 *	0	622	3200	0.194 *	60	682	3200	0.213 *	0	682	3200	0.213 *	0	682	3200	0.213 *
Wb Right	51	1600	0.032	0	51	1600	0.032	0	51	1600	0.032	2	53	1600	0.033	0	53	1600	0.033	0	53	1600	0.033
Yellow Allowance:			0.100 *				0.100 *				0.100 *				0.100 *				0.100 *				0.100 *
ICU			0.893				0.900				0.900				0.959				0.966				0.966
LOS			D				D				D				E				E				E

** Key conflicting movement as a part of ICU*
1 Counts conducted by: City Traffic Counters
2 Capacity expressed in veh/hour of green

LINSCOTT, LAW & GREENSPAN, ENGINEERS
600 S. Lake Avenue, Suite 500, Pasadena CA 91106
(626) 796.2322 Fax (626) 792-0941

INTERSECTION CAPACITY UTILIZATION

Rosemead Boulevard (SR-164) @ Valley Boulevard
Peak hr: PM
Annual Growth: 0.82%

Phase I

N-S St: Rosemead Boulevard (SR-164)
E-W St: Valley Boulevard
Project: Flair Spectrum Project/1-14-4074-1
File: ICU4

Date: 09/27/2014
Date of Count: 2014
Projection Year: 2016

	2014 EXIST. TRAFFIC			2014 EXISTING WITH PROJECT				2014 EXIST. W/PROJECT + MITIGATION				2016 FUTURE WITHOUT PROJECT				2016 FUTURE WITH PROJECT				2016 FUTURE W/PROJECT + MITIGATION			
	1	2	V/C	Added	Total	2	V/C	Added	Total	2	V/C	Added	Total	2	V/C	Added	Total	2	V/C	Added	Total	2	V/C
Movement	Volume	Capacity	Ratio	Volume	Volume	Capacity	Ratio	Volume	Volume	Capacity	Ratio	Volume	Volume	Capacity	Ratio	Volume	Volume	Capacity	Ratio	Volume	Volume	Capacity	Ratio
Nb Left	168	1600	0.105 *	22	190	1600	0.119 *	0	190	1600	0.119 *	14	182	1600	0.114 *	22	204	1600	0.127 *	0	204	1600	0.127 *
Nb Thru	1252	3200	0.391	22	1274	3200	0.398	0	1274	3200	0.398	70	1322	3200	0.413	22	1344	3200	0.420	0	1344	3200	0.420
Nb Right	128	1600	0.080	10	138	1600	0.086	0	138	1600	0.086	11	139	1600	0.087	10	149	1600	0.093	0	149	1600	0.093
Sb Left	68	1600	0.043	0	68	1600	0.043	0	68	1600	0.043	3	71	1600	0.044	0	71	1600	0.044	0	71	1600	0.044
Sb Thru	1180	3200	0.369 *	22	1202	3200	0.376 *	0	1202	3200	0.376 *	55	1235	3200	0.386 *	22	1257	3200	0.393 *	0	1257	3200	0.393 *
Sb Right	230	1600	0.144	0	230	1600	0.144	0	230	1600	0.144	41	271	1600	0.169	0	271	1600	0.169	0	271	1600	0.169
Eb Left	265	1600	0.166 *	0	265	1600	0.166 *	0	265	1600	0.166 *	36	301	1600	0.188 *	0	301	1600	0.188 *	0	301	1600	0.188 *
Eb Thru	599	3200	0.187	0	599	3200	0.187	0	599	3200	0.187	70	669	3200	0.209	0	669	3200	0.209	0	669	3200	0.209
Eb Right	178	1600	0.111	21	199	1600	0.124	0	199	1600	0.124	8	186	1600	0.116	21	207	1600	0.129	0	207	1600	0.129
Wb Left	173	1600	0.108	10	183	1600	0.114	0	183	1600	0.114	31	204	1600	0.127	10	214	1600	0.134	0	214	1600	0.134
Wb Thru	476	3200	0.149 *	0	476	3200	0.149 *	0	476	3200	0.149 *	70	546	3200	0.171 *	0	546	3200	0.171 *	0	546	3200	0.171 *
Wb Right	62	1600	0.039	0	62	1600	0.039	0	62	1600	0.039	3	65	1600	0.041	0	65	1600	0.041	0	65	1600	0.041
Yellow Allowance:			0.100 *				0.100 *				0.100 *				0.100 *				0.100 *				0.100 *
ICU			0.888				0.909				0.909				0.959				0.979				0.979
LOS			D				E				E				E				E				E

** Key conflicting movement as a part of ICU*
1 Counts conducted by: City Traffic Counters
2 Capacity expressed in veh/hour of green

LINSCOTT, LAW & GREENSPAN, ENGINEERS
600 S. Lake Avenue, Suite 500, Pasadena CA 91106
(626) 796.2322 Fax (626) 792-0941

INTERSECTION CAPACITY UTILIZATION

Rosemead Boulevard (SR-164) @ Valley Boulevard
Peak hr: SAT MID-DAY
Annual Growth: 0.82%

Phase I

N-S St: Rosemead Boulevard (SR-164)
E-W St: Valley Boulevard
Project: Flair Spectrum Project/1-14-4074-1
File: ICU4

Date: 09/27/2014
Date of Count: 2014
Projection Year: 2016

	2014 EXIST. TRAFFIC			2014 EXISTING WITH PROJECT				2014 EXIST. W/PROJECT + MITIGATION				2016 FUTURE WITHOUT PROJECT				2016 FUTURE WITH PROJECT				2016 FUTURE W/PROJECT + MITIGATION			
	1	2	V/C	Added	Total	2	V/C	Added	Total	2	V/C	Added	Total	2	V/C	Added	Total	2	V/C	Added	Total	2	V/C
Movement	Volume	Capacity	Ratio	Volume	Volume	Capacity	Ratio	Volume	Volume	Capacity	Ratio	Volume	Volume	Capacity	Ratio	Volume	Volume	Capacity	Ratio	Volume	Volume	Capacity	Ratio
Nb Left	196	1600	0.123 *	37	233	1600	0.146 *	0	233	1600	0.146 *	5	201	1600	0.126 *	37	238	1600	0.149 *	0	238	1600	0.149 *
Nb Thru	1237	3200	0.387	38	1275	3200	0.398	0	1275	3200	0.398	50	1287	3200	0.402	38	1325	3200	0.414	0	1325	3200	0.414
Nb Right	171	1600	0.107	17	188	1600	0.118	0	188	1600	0.118	6	177	1600	0.111	17	194	1600	0.121	0	194	1600	0.121
Sb Left	66	1600	0.041	0	66	1600	0.041	0	66	1600	0.041	4	70	1600	0.044	0	70	1600	0.044	0	70	1600	0.044
Sb Thru	1165	3200	0.364 *	41	1206	3200	0.377 *	0	1206	3200	0.377 *	48	1213	3200	0.379 *	41	1254	3200	0.392 *	0	1254	3200	0.392 *
Sb Right	257	1600	0.161	0	257	1600	0.161	0	257	1600	0.161	50	307	1600	0.192	0	307	1600	0.192	0	307	1600	0.192
Eb Left	209	1600	0.131	0	209	1600	0.131	0	209	1600	0.131	43	252	1600	0.158 *	0	252	1600	0.158 *	0	252	1600	0.158 *
Eb Thru	533	3200	0.167 *	0	533	3200	0.167 *	0	533	3200	0.167 *	80	613	3200	0.191	0	613	3200	0.191	0	613	3200	0.191
Eb Right	219	1600	0.137	40	259	1600	0.162	0	259	1600	0.162	7	226	1600	0.141	40	266	1600	0.166	0	266	1600	0.166
Wb Left	218	1600	0.136 *	19	237	1600	0.148 *	0	237	1600	0.148 *	7	225	1600	0.140	19	244	1600	0.152	0	244	1600	0.152
Wb Thru	535	3200	0.167	0	535	3200	0.167	0	535	3200	0.167	84	619	3200	0.193 *	0	619	3200	0.193 *	0	619	3200	0.193 *
Wb Right	68	1600	0.043	0	68	1600	0.043	0	68	1600	0.043	3	71	1600	0.044	0	71	1600	0.044	0	71	1600	0.044
Yellow Allowance:			0.100 *				0.100 *				0.100 *				0.100 *				0.100 *				0.100 *
ICU			0.889				0.937				0.937				0.956				0.992				0.992
LOS		D				E				E				E				E				E	

** Key conflicting movement as a part of ICU*
1 Counts conducted by: City Traffic Counters
2 Capacity expressed in veh/hour of green

LINSCOTT, LAW & GREENSPAN, ENGINEERS
600 S. Lake Avenue, Suite 500, Pasadena CA 91106
(626) 796.2322 Fax (626) 792-0941

INTERSECTION CAPACITY UTILIZATION

Rosemead Boulevard (SR-164) @ Valley Boulevard
Peak hr: AM
Annual Growth: 0.82%

Phases I & II

N-S St: Rosemead Boulevard (SR-164)
E-W St: Valley Boulevard
Project: Flair Spectrum Project/1-14-4074-1
File: ICU4

Date: 09/27/2014
Date of Count: 2014
Projection Year: 2019

	2014 EXIST. TRAFFIC			2014 EXISTING WITH PROJECT				2014 EXIST. W/PROJECT + MITIGATION				2019 FUTURE WITHOUT PROJECT				2019 FUTURE WITH PROJECT				2019 FUTURE W/PROJECT + MITIGATION			
	1	2	V/C	Added	Total	2	V/C	Added	Total	2	V/C	Added	Total	2	V/C	Added	Total	2	V/C	Added	Total	2	V/C
Movement	Volume	Capacity	Ratio	Volume	Volume	Capacity	Ratio	Volume	Volume	Capacity	Ratio	Volume	Volume	Capacity	Ratio	Volume	Volume	Capacity	Ratio	Volume	Volume	Capacity	Ratio
Nb Left	145	1600	0.091 *	12	157	1600	0.098 *	0	157	1600	0.098 *	9	154	1600	0.096 *	12	166	1600	0.104 *	0	166	1600	0.104 *
Nb Thru	1223	3200	0.382	15	1238	3200	0.387	0	1238	3200	0.387	83	1306	3200	0.408	15	1321	3200	0.413	0	1321	3200	0.413
Nb Right	90	1600	0.056	2	92	1600	0.058	0	92	1600	0.058	31	121	1600	0.075	2	123	1600	0.077	0	123	1600	0.077
Sb Left	39	1600	0.024	0	39	1600	0.024	0	39	1600	0.024	4	43	1600	0.027	0	43	1600	0.027	0	43	1600	0.027
Sb Thru	1278	3200	0.399 *	14	1292	3200	0.404 *	0	1292	3200	0.404 *	116	1394	3200	0.436 *	14	1408	3200	0.440 *	0	1408	3200	0.440 *
Sb Right	279	1600	0.174	0	279	1600	0.174	0	279	1600	0.174	42	321	1600	0.200	0	321	1600	0.200	0	321	1600	0.200
Eb Left	174	1600	0.109 *	0	174	1600	0.109 *	0	174	1600	0.109 *	32	206	1600	0.129 *	0	206	1600	0.129 *	0	206	1600	0.129 *
Eb Thru	335	3200	0.105	0	335	3200	0.105	0	335	3200	0.105	58	393	3200	0.123	0	393	3200	0.123	0	393	3200	0.123
Eb Right	132	1600	0.083	14	146	1600	0.091	0	146	1600	0.091	20	152	1600	0.095	14	166	1600	0.103	0	166	1600	0.103
Wb Left	212	1600	0.133	5	217	1600	0.136	0	217	1600	0.136	18	230	1600	0.144	5	235	1600	0.147	0	235	1600	0.147
Wb Thru	622	3200	0.194 *	0	622	3200	0.194 *	0	622	3200	0.194 *	76	698	3200	0.218 *	0	698	3200	0.218 *	0	698	3200	0.218 *
Wb Right	51	1600	0.032	0	51	1600	0.032	0	51	1600	0.032	3	54	1600	0.034	0	54	1600	0.034	0	54	1600	0.034
Yellow Allowance:			0.100 *				0.100 *				0.100 *				0.100 *				0.100 *				0.100 *
ICU			0.893				0.905				0.905				0.979				0.991				0.941
LOS		D				E				E				E				E				E	

** Key conflicting movement as a part of ICU*
1 Counts conducted by: City Traffic Counters
2 Capacity expressed in veh/hour of green

LINSCOTT, LAW & GREENSPAN, ENGINEERS
600 S. Lake Avenue, Suite 500, Pasadena CA 91106
(626) 796.2322 Fax (626) 792-0941

INTERSECTION CAPACITY UTILIZATION

Rosemead Boulevard (SR-164) @ Valley Boulevard
Peak hr: PM
Annual Growth: 0.82%

Phases I & II

N-S St: Rosemead Boulevard (SR-164)
E-W St: Valley Boulevard
Project: Flair Spectrum Project/1-14-4074-1
File: ICU4

Date: 09/27/2014
Date of Count: 2014
Projection Year: 2019

	2014 EXIST. TRAFFIC			2014 EXISTING WITH PROJECT				2014 EXIST. W/PROJECT + MITIGATION				2019 FUTURE WITHOUT PROJECT				2019 FUTURE WITH PROJECT				2019 FUTURE W/PROJECT + MITIGATION			
	1	2	V/C	Added	Total	2	V/C	Added	Total	2	V/C	Added	Total	2	V/C	Added	Total	2	V/C	Added	Total	2	V/C
Movement	Volume	Capacity	Ratio	Volume	Volume	Capacity	Ratio	Volume	Volume	Capacity	Ratio	Volume	Volume	Capacity	Ratio	Volume	Volume	Capacity	Ratio	Volume	Volume	Capacity	Ratio
Nb Left	168	1600	0.105 *	26	194	1600	0.121 *	0	194	1600	0.121 *	18	186	1600	0.116 *	26	212	1600	0.133 *	0	212	1600	0.133 *
Nb Thru	1252	3200	0.391	26	1278	3200	0.399	0	1278	3200	0.399	101	1353	3200	0.423	26	1379	3200	0.431	0	1379	3200	0.431
Nb Right	128	1600	0.080	10	138	1600	0.086	0	138	1600	0.086	14	142	1600	0.089	10	152	1600	0.095	0	152	1600	0.095
Sb Left	68	1600	0.043	0	68	1600	0.043	0	68	1600	0.043	5	73	1600	0.046	0	73	1600	0.046	0	73	1600	0.046
Sb Thru	1180	3200	0.369 *	31	1211	3200	0.378 *	0	1211	3200	0.378 *	85	1265	3200	0.395 *	31	1296	3200	0.405 *	0	1296	3200	0.405 *
Sb Right	230	1600	0.144	0	230	1600	0.144	0	230	1600	0.144	47	277	1600	0.173	0	277	1600	0.173	0	277	1600	0.173
Eb Left	265	1600	0.166 *	0	265	1600	0.166 *	0	265	1600	0.166 *	43	308	1600	0.193 *	0	308	1600	0.193 *	0	308	1600	0.193 *
Eb Thru	599	3200	0.187	0	599	3200	0.187	0	599	3200	0.187	85	684	3200	0.214	0	684	3200	0.214	0	684	3200	0.214
Eb Right	178	1600	0.111	28	206	1600	0.129	0	206	1600	0.129	12	190	1600	0.119	28	218	1600	0.137	0	218	1600	0.137
Wb Left	173	1600	0.108	10	183	1600	0.114	0	183	1600	0.114	35	208	1600	0.130	10	218	1600	0.136	0	218	1600	0.136
Wb Thru	476	3200	0.149 *	0	476	3200	0.149 *	0	476	3200	0.149 *	82	558	3200	0.174 *	0	558	3200	0.174 *	0	558	3200	0.174 *
Wb Right	62	1600	0.039	0	62	1600	0.039	0	62	1600	0.039	5	67	1600	0.042	0	67	1600	0.042	0	67	1600	0.042
Yellow Allowance:			0.100 *				0.100 *				0.100 *				0.100 *				0.100 *				0.100 *
ICU			0.888				0.914				0.914				0.978				1.004				0.954
LOS			D				E				E				E				F				E

** Key conflicting movement as a part of ICU*
1 Counts conducted by: City Traffic Counters
2 Capacity expressed in veh/hour of green

LINSCOTT, LAW & GREENSPAN, ENGINEERS
600 S. Lake Avenue, Suite 500, Pasadena CA 91106
(626) 796.2322 Fax (626) 792-0941

INTERSECTION CAPACITY UTILIZATION

Rosemead Boulevard (SR-164) @ Valley Boulevard
Peak hr: SAT MID-DAY
Annual Growth: 0.82%

Phases I & II

N-S St: Rosemead Boulevard (SR-164)
E-W St: Valley Boulevard
Project: Flair Spectrum Project/1-14-4074-1
File: ICU4

Date: 09/27/2014
Date of Count: 2014
Projection Year: 2019

	2014 EXIST. TRAFFIC			2014 EXISTING WITH PROJECT				2014 EXIST. W/PROJECT + MITIGATION				2019 FUTURE WITHOUT PROJECT				2019 FUTURE WITH PROJECT				2019 FUTURE W/PROJECT + MITIGATION			
	1	2	V/C	Added	Total	2	V/C	Added	Total	2	V/C	Added	Total	2	V/C	Added	Total	2	V/C	Added	Total	2	V/C
Movement	Volume	Capacity	Ratio	Volume	Volume	Capacity	Ratio	Volume	Volume	Capacity	Ratio	Volume	Volume	Capacity	Ratio	Volume	Volume	Capacity	Ratio	Volume	Volume	Capacity	Ratio
Nb Left	196	1600	0.123 *	41	237	1600	0.148 *	0	237	1600	0.148 *	10	206	1600	0.129 *	41	247	1600	0.154 *	0	247	1600	0.154 *
Nb Thru	1237	3200	0.387	44	1281	3200	0.400	0	1281	3200	0.400	82	1319	3200	0.412	44	1363	3200	0.426	0	1363	3200	0.426
Nb Right	171	1600	0.107	17	188	1600	0.118	0	188	1600	0.118	10	181	1600	0.113	17	198	1600	0.124	0	198	1600	0.124
Sb Left	66	1600	0.041	0	66	1600	0.041	0	66	1600	0.041	6	72	1600	0.045	0	72	1600	0.045	0	72	1600	0.045
Sb Thru	1165	3200	0.364 *	47	1212	3200	0.379 *	0	1212	3200	0.379 *	78	1243	3200	0.388 *	47	1290	3200	0.403 *	0	1290	3200	0.403 *
Sb Right	257	1600	0.161	0	257	1600	0.161	0	257	1600	0.161	57	314	1600	0.196	0	314	1600	0.196	0	314	1600	0.196
Eb Left	209	1600	0.131	0	209	1600	0.131	0	209	1600	0.131	49	258	1600	0.161 *	0	258	1600	0.161 *	0	258	1600	0.161 *
Eb Thru	533	3200	0.167 *	0	533	3200	0.167 *	0	533	3200	0.167 *	93	626	3200	0.196	0	626	3200	0.196	0	626	3200	0.196
Eb Right	219	1600	0.137	45	264	1600	0.165	0	264	1600	0.165	12	231	1600	0.144	45	276	1600	0.173	0	276	1600	0.173
Wb Left	218	1600	0.136 *	19	237	1600	0.148 *	0	237	1600	0.148 *	12	230	1600	0.144	19	249	1600	0.156	0	249	1600	0.156
Wb Thru	535	3200	0.167	0	535	3200	0.167	0	535	3200	0.167	97	632	3200	0.198 *	0	632	3200	0.198 *	0	632	3200	0.198 *
Wb Right	68	1600	0.043	0	68	1600	0.043	0	68	1600	0.043	5	73	1600	0.046	0	73	1600	0.046	0	73	1600	0.046
Yellow Allowance:			0.100 *				0.100 *				0.100 *				0.100 *				0.100 *				0.100 *
ICU			0.889				0.942				0.942				0.976				1.016				0.966
LOS		D				E				E				E				F				E	

** Key conflicting movement as a part of ICU*
1 Counts conducted by: City Traffic Counters
2 Capacity expressed in veh/hour of green

LINSCOTT, LAW & GREENSPAN, ENGINEERS
600 S. Lake Avenue, Suite 500, Pasadena CA 91106
(626) 796.2322 Fax (626) 792-0941

INTERSECTION CAPACITY UTILIZATION

N-S St: Rosemead Boulevard (SR-164)
E-W St: Valley Boulevard
Project: Flair Spectrum Project/1-14-4074-1
File: ICU4

Rosemead Boulevard (SR-164) @ Valley Boulevard
Peak hr: AM
Annual Growth: 0.52%

General Plan Buildout (Phases I & II)

Date: 09/27/2014
Date of Count: 2014
Projection Year: 2035

	2014 EXIST. TRAFFIC			2014 EXISTING WITH PROJECT				2014 EXIST. W/PROJECT + MITIGATION				2035 FUTURE WITHOUT PROJECT				2035 FUTURE WITH PROJECT				2035 FUTURE W/PROJECT + MITIGATION			
	1	2	V/C	Added	Total	2	V/C	Added	Total	2	V/C	Added	Total	2	V/C	Added	Total	2	V/C	Added	Total	2	V/C
Movement	Volume	Capacity	Ratio	Volume	Volume	Capacity	Ratio	Volume	Volume	Capacity	Ratio	Volume	Volume	Capacity	Ratio	Volume	Volume	Capacity	Ratio	Volume	Volume	Capacity	Ratio
Nb Left	145	1600	0.091 *	12	157	1600	0.098 *	0	157	1600	0.098 *	20	165	1600	0.103 *	12	177	1600	0.110 *	0	177	1600	0.110 *
Nb Thru	1223	3200	0.382	15	1238	3200	0.387	0	1238	3200	0.387	173	1396	3200	0.436	15	1411	3200	0.441	0	1411	3200	0.441
Nb Right	90	1600	0.056	2	92	1600	0.058	0	92	1600	0.058	37	127	1600	0.080	2	129	1600	0.081	0	129	1600	0.081
Sb Left	39	1600	0.024	0	39	1600	0.024	0	39	1600	0.024	6	45	1600	0.028	0	45	1600	0.028	0	45	1600	0.028
Sb Thru	1278	3200	0.399 *	14	1292	3200	0.404 *	0	1292	3200	0.404 *	210	1488	3200	0.465 *	14	1502	3200	0.469 *	0	1502	3200	0.469 *
Sb Right	279	1600	0.174	0	279	1600	0.174	0	279	1600	0.174	62	341	1600	0.213	0	341	1600	0.213	0	341	1600	0.213
Eb Left	174	1600	0.109 *	0	174	1600	0.109 *	0	174	1600	0.109 *	45	219	1600	0.137 *	0	219	1600	0.137 *	0	219	1600	0.137 *
Eb Thru	335	3200	0.105	0	335	3200	0.105	0	335	3200	0.105	83	418	3200	0.130	0	418	3200	0.130	0	418	3200	0.130
Eb Right	132	1600	0.083	14	146	1600	0.091	0	146	1600	0.091	29	161	1600	0.101	14	175	1600	0.109	0	175	1600	0.109
Wb Left	212	1600	0.133	5	217	1600	0.136	0	217	1600	0.136	33	245	1600	0.153	5	250	1600	0.156	0	250	1600	0.156
Wb Thru	622	3200	0.194 *	0	622	3200	0.194 *	0	622	3200	0.194 *	122	744	3200	0.232 *	0	744	3200	0.232 *	0	744	3200	0.232 *
Wb Right	51	1600	0.032	0	51	1600	0.032	0	51	1600	0.032	7	58	1600	0.036	0	58	1600	0.036	0	58	1600	0.036
Yellow Allowance:			0.100 *				0.100 *				0.100 *				0.100 *				0.100 *				0.100 *
ICU			0.893				0.905				0.905				1.037				1.049				0.999
LOS			D				E				E				F				F				E

** Key conflicting movement as a part of ICU*
1 Counts conducted by: City Traffic Counters
2 Capacity expressed in veh/hour of green

LINSCOTT, LAW & GREENSPAN, ENGINEERS
600 S. Lake Avenue, Suite 500, Pasadena CA 91106
(626) 796.2322 Fax (626) 792-0941

INTERSECTION CAPACITY UTILIZATION

N-S St: Rosemead Boulevard (SR-164)
E-W St: Valley Boulevard
Project: Flair Spectrum Project/1-14-4074-1
File: ICU4

Rosemead Boulevard (SR-164) @ Valley Boulevard
Peak hr: PM
Annual Growth: 0.52%

General Plan Buildout (Phases I & II)

Date: 09/27/2014
Date of Count: 2014
Projection Year: 2035

	2014 EXIST. TRAFFIC			2014 EXISTING WITH PROJECT				2014 EXIST. W/PROJECT + MITIGATION				2035 FUTURE WITHOUT PROJECT				2035 FUTURE WITH PROJECT				2035 FUTURE W/PROJECT + MITIGATION			
	1	2	V/C	Added	Total	2	V/C	Added	Total	2	V/C	Added	Total	2	V/C	Added	Total	2	V/C	Added	Total	2	V/C
Movement	Volume	Capacity	Ratio	Volume	Volume	Capacity	Ratio	Volume	Volume	Capacity	Ratio	Volume	Volume	Capacity	Ratio	Volume	Volume	Capacity	Ratio	Volume	Volume	Capacity	Ratio
Nb Left	168	1600	0.105 *	26	194	1600	0.121 *	0	194	1600	0.121 *	30	198	1600	0.124 *	26	224	1600	0.140 *	0	224	1600	0.140 *
Nb Thru	1252	3200	0.391	26	1278	3200	0.399	0	1278	3200	0.399	193	1445	3200	0.452	26	1471	3200	0.460	0	1471	3200	0.460
Nb Right	128	1600	0.080	10	138	1600	0.086	0	138	1600	0.086	24	152	1600	0.095	10	162	1600	0.101	0	162	1600	0.101
Sb Left	68	1600	0.043	0	68	1600	0.043	0	68	1600	0.043	10	78	1600	0.049	0	78	1600	0.049	0	78	1600	0.049
Sb Thru	1180	3200	0.369 *	31	1211	3200	0.378 *	0	1211	3200	0.378 *	172	1352	3200	0.422 *	31	1383	3200	0.432 *	0	1383	3200	0.432 *
Sb Right	230	1600	0.144	0	230	1600	0.144	0	230	1600	0.144	63	293	1600	0.183	0	293	1600	0.183	0	293	1600	0.183
Eb Left	265	1600	0.166 *	0	265	1600	0.166 *	0	265	1600	0.166 *	62	327	1600	0.205 *	0	327	1600	0.205 *	0	327	1600	0.205 *
Eb Thru	599	3200	0.187	0	599	3200	0.187	0	599	3200	0.187	129	728	3200	0.227	0	728	3200	0.227	0	728	3200	0.227
Eb Right	178	1600	0.111	28	206	1600	0.129	0	206	1600	0.129	25	203	1600	0.127	28	231	1600	0.145	0	231	1600	0.145
Wb Left	173	1600	0.108	10	183	1600	0.114	0	183	1600	0.114	48	221	1600	0.138	10	231	1600	0.144	0	231	1600	0.144
Wb Thru	476	3200	0.149 *	0	476	3200	0.149 *	0	476	3200	0.149 *	117	593	3200	0.185 *	0	593	3200	0.185 *	0	593	3200	0.185 *
Wb Right	62	1600	0.039	0	62	1600	0.039	0	62	1600	0.039	9	71	1600	0.044	0	71	1600	0.044	0	71	1600	0.044
Yellow Allowance:			0.100 *				0.100 *				0.100 *				0.100 *				0.100 *				0.100 *
ICU			0.888				0.914				0.914				1.036				1.062				1.012
LOS			D				E				E				F				F				F

** Key conflicting movement as a part of ICU*
1 Counts conducted by: City Traffic Counters
2 Capacity expressed in veh/hour of green

LINSCOTT, LAW & GREENSPAN, ENGINEERS
600 S. Lake Avenue, Suite 500, Pasadena CA 91106
(626) 796.2322 Fax (626) 792-0941

INTERSECTION CAPACITY UTILIZATION

Rosemead Boulevard (SR-164) @ Valley Boulevard
Peak hr: SAT MID-DAY
Annual Growth: 0.52%

General Plan Buildout (Phases I & II)

N-S St: Rosemead Boulevard (SR-164)
E-W St: Valley Boulevard
Project: Flair Spectrum Project/1-14-4074-1
File: ICU4

Date: 09/27/2014
Date of Count: 2014
Projection Year: 2035

	2014 EXIST. TRAFFIC			2014 EXISTING WITH PROJECT				2014 EXIST. W/PROJECT + MITIGATION				2035 FUTURE WITHOUT PROJECT				2035 FUTURE WITH PROJECT				2035 FUTURE W/PROJECT + MITIGATION			
	1	2	V/C	Added	Total	2	V/C	Added	Total	2	V/C	Added	Total	2	V/C	Added	Total	2	V/C	Added	Total	2	V/C
Movement	Volume	Capacity	Ratio	Volume	Volume	Capacity	Ratio	Volume	Volume	Capacity	Ratio	Volume	Volume	Capacity	Ratio	Volume	Volume	Capacity	Ratio	Volume	Volume	Capacity	Ratio
Nb Left	196	1600	0.123 *	41	237	1600	0.148 *	0	237	1600	0.148 *	25	221	1600	0.138 *	41	262	1600	0.163 *	0	262	1600	0.163 *
Nb Thru	1237	3200	0.387	44	1281	3200	0.400	0	1281	3200	0.400	172	1409	3200	0.440	44	1453	3200	0.454	0	1453	3200	0.454
Nb Right	171	1600	0.107	17	188	1600	0.118	0	188	1600	0.118	23	194	1600	0.121	17	211	1600	0.132	0	211	1600	0.132
Sb Left	66	1600	0.041	0	66	1600	0.041	0	66	1600	0.041	11	77	1600	0.048	0	77	1600	0.048	0	77	1600	0.048
Sb Thru	1165	3200	0.364 *	47	1212	3200	0.379 *	0	1212	3200	0.379 *	163	1328	3200	0.415 *	47	1375	3200	0.430 *	0	1375	3200	0.430 *
Sb Right	257	1600	0.161	0	257	1600	0.161	0	257	1600	0.161	76	333	1600	0.208	0	333	1600	0.208	0	333	1600	0.208
Eb Left	209	1600	0.131	0	209	1600	0.131	0	209	1600	0.131	64	273	1600	0.171 *	0	273	1600	0.171 *	0	273	1600	0.171 *
Eb Thru	533	3200	0.167 *	0	533	3200	0.167 *	0	533	3200	0.167 *	132	665	3200	0.208	0	665	3200	0.208	0	665	3200	0.208
Eb Right	219	1600	0.137	45	264	1600	0.165	0	264	1600	0.165	28	247	1600	0.155	45	292	1600	0.183	0	292	1600	0.183
Wb Left	218	1600	0.136 *	19	237	1600	0.148 *	0	237	1600	0.148 *	28	246	1600	0.154	19	265	1600	0.166	0	265	1600	0.166
Wb Thru	535	3200	0.167	0	535	3200	0.167	0	535	3200	0.167	137	672	3200	0.210 *	0	672	3200	0.210 *	0	672	3200	0.210 *
Wb Right	68	1600	0.043	0	68	1600	0.043	0	68	1600	0.043	10	78	1600	0.049	0	78	1600	0.049	0	78	1600	0.049
Yellow Allowance:			0.100 *				0.100 *				0.100 *				0.100 *				0.100 *				0.100 *
ICU			0.889				0.942				0.942				1.033				1.074				1.024
LOS		D				E				E				F				F				F	

** Key conflicting movement as a part of ICU*
1 Counts conducted by: City Traffic Counters
2 Capacity expressed in veh/hour of green

LINSCOTT, LAW & GREENSPAN, ENGINEERS
600 S. Lake Avenue, Suite 500, Pasadena CA 91106
(626) 796.2322 Fax (626) 792-0941

INTERSECTION CAPACITY UTILIZATION

Rosemead Boulevard (SR-164) @ Glendon Way-I-10 Fwy WB Ramps
Peak hr: AM
Annual Growth: 0.82%

N-S St: Rosemead Boulevard (SR-164)
E-W St: Glendon Way-I-10 Fwy WB Ramps
Project: Flair Spectrum Project/1-14-4074-1
File: ICU5

Date: 09/27/2014
Date of Count: 2014
Projection Year: 2016

Phase I

	2014 EXIST. TRAFFIC			2014 EXISTING WITH PROJECT				2014 EXIST. W/PROJECT + MITIGATION				2016 FUTURE WITHOUT PROJECT				2016 FUTURE WITH PROJECT				2016 FUTURE W/PROJECT + MITIGATION			
	1	2	V/C	Added	Total	2	V/C	Added	Total	2	V/C	Added	Total	2	V/C	Added	Total	2	V/C	Added	Total	2	V/C
Movement	Volume	Capacity	Ratio	Volume	Volume	Capacity	Ratio	Volume	Volume	Capacity	Ratio	Volume	Volume	Capacity	Ratio	Volume	Volume	Capacity	Ratio	Volume	Volume	Capacity	Ratio
Nb Left	89	1600	0.056	0	89	1600	0.056	0	89	1600	0.056	1	90	1600	0.057	0	90	1600	0.057	0	90	1600	0.057
Nb Thru	1632	4800	0.394	15	1647	4800	0.409	0	1647	4800	0.409	89	1721	4800	0.413	15	1736	4800	0.429	0	1736	4800	0.429
Nb Right	257	0	-	60	317	0	-	0	317	0	-	6	263	0	-	60	323	0	-	0	323	0	-
Sb Left	0	0	0.000	0	0	0	0.000	0	0	0	0.000	0	0	0	0.000	0	0	0	0.000	0	0	0	0.000
Sb Thru	1560	3200	0.488 *	35	1595	3200	0.498 *	0	1595	3200	0.498 *	112	1672	3200	0.522 *	35	1707	3200	0.533 *	0	1707	3200	0.533 *
Sb Right	296	1600	0.185	0	296	1600	0.185	0	296	1600	0.185	5	301	1600	0.188	0	301	1600	0.188	0	301	1600	0.188
Eb Left	15	1600	0.009	0	15	1600	0.009	0	15	1600	0.009	0	15	1600	0.010	0	15	1600	0.010	0	15	1600	0.010
Eb Thru	0	0	0.000	0	0	0	0.000	0	0	0	0.000	0	0	0	0.000	0	0	0	0.000	0	0	0	0.000
Eb Right	187	1600	0.117 *	0	187	1600	0.117 *	0	187	1600	0.117 *	3	190	1600	0.119 *	0	190	1600	0.119 *	0	190	1600	0.119 *
Wb Left	67	0	0.042 *	0	67	0	0.042 *	0	67	0	0.042 *	1	68	0	0.043 *	0	68	0	0.043 *	0	68	0	0.043 *
Wb Thru	37	1600	0.065	0	37	1600	0.065	0	37	1600	0.065	1	38	1600	0.066	0	38	1600	0.066	0	38	1600	0.066
Wb Right	225	1600	0.141	0	225	1600	0.141	0	225	1600	0.141	6	231	1600	0.144	0	231	1600	0.144	0	231	1600	0.144
Yellow Allowance:			0.100 *				0.100 *				0.100 *				0.100 *				0.100 *				0.100 *
ICU			0.802				0.813				0.813				0.840				0.851				0.851
LOS			D				D				D				D				D				D

** Key conflicting movement as a part of ICU*
1 Counts conducted by: The Traffic Solution
2 Capacity expressed in veh/hour of green

LINSCOTT, LAW & GREENSPAN, ENGINEERS
600 S. Lake Avenue, Suite 500, Pasadena CA 91106
(626) 796.2322 Fax (626) 792-0941

INTERSECTION CAPACITY UTILIZATION

Rosemead Boulevard (SR-164) @ Glendon Way-I-10 Fwy WB Ramps
Peak hr: PM
Annual Growth: 0.82%

N-S St: Rosemead Boulevard (SR-164)
E-W St: Glendon Way-I-10 Fwy WB Ramps
Project: Flair Spectrum Project/1-14-4074-1
File: ICU5

Date: 09/27/2014
Date of Count: 2014
Projection Year: 2016

Phase I

	2014 EXIST. TRAFFIC			2014 EXISTING WITH PROJECT				2014 EXIST. W/PROJECT + MITIGATION				2016 FUTURE WITHOUT PROJECT				2016 FUTURE WITH PROJECT				2016 FUTURE W/PROJECT + MITIGATION			
	1	2	V/C	Added	Total	2	V/C	Added	Total	2	V/C	Added	Total	2	V/C	Added	Total	2	V/C	Added	Total	2	V/C
Movement	Volume	Capacity	Ratio	Volume	Volume	Capacity	Ratio	Volume	Volume	Capacity	Ratio	Volume	Volume	Capacity	Ratio	Volume	Volume	Capacity	Ratio	Volume	Volume	Capacity	Ratio
Nb Left	159	1600	0.099	0	159	1600	0.099	0	159	1600	0.099	3	162	1600	0.101	0	162	1600	0.101	0	162	1600	0.101
Nb Thru	2087	4800	0.569 *	63	2150	4800	0.625 *	0	2150	4800	0.625 *	102	2189	4800	0.596 *	63	2252	4800	0.651 *	0	2252	4800	0.651 *
Nb Right	645	0	-	203	848	0	-	0	848	0	-	26	671	0	-	203	874	0	-	0	874	0	-
Sb Left	0	0	0.000	0	0	0	0.000	0	0	0	0.000	0	0	0	0.000	0	0	0	0.000	0	0	0	0.000
Sb Thru	1175	3200	0.367	65	1240	3200	0.388	0	1240	3200	0.388	88	1263	3200	0.395	65	1328	3200	0.415	0	1328	3200	0.415
Sb Right	442	1600	0.276	0	442	1600	0.276	0	442	1600	0.276	7	449	1600	0.281	0	449	1600	0.281	0	449	1600	0.281
Eb Left	24	1600	0.015 *	0	24	1600	0.015 *	0	24	1600	0.015 *	0	24	1600	0.015 *	0	24	1600	0.015 *	0	24	1600	0.015 *
Eb Thru	0	0	0.000	0	0	0	0.000	0	0	0	0.000	0	0	0	0.000	0	0	0	0.000	0	0	0	0.000
Eb Right	112	1600	0.070	0	112	1600	0.070	0	112	1600	0.070	2	114	1600	0.071	0	114	1600	0.071	0	114	1600	0.071
Wb Left	125	0	0.078	0	125	0	0.078	0	125	0	0.078	2	127	0	0.079	0	127	0	0.079	0	127	0	0.079
Wb Thru	92	1600	0.136	0	92	1600	0.136	0	92	1600	0.136	2	94	1600	0.138	0	94	1600	0.138	0	94	1600	0.138
Wb Right	250	1600	0.156 *	0	250	1600	0.156 *	0	250	1600	0.156 *	5	255	1600	0.159 *	0	255	1600	0.159 *	0	255	1600	0.159 *
Yellow Allowance:			0.100 *				0.100 *				0.100 *				0.100 *				0.100 *				0.100 *
ICU			0.840				0.896				0.896				0.871				0.926				0.926
LOS			D				D				D				D				E				E

** Key conflicting movement as a part of ICU*
1 Counts conducted by: The Traffic Solution
2 Capacity expressed in veh/hour of green

LINSCOTT, LAW & GREENSPAN, ENGINEERS
600 S. Lake Avenue, Suite 500, Pasadena CA 91106
(626) 796.2322 Fax (626) 792-0941

INTERSECTION CAPACITY UTILIZATION

Rosemead Boulevard (SR-164) @ Glendon Way-I-10 Fwy WB Ramps
Peak hr: SAT MID-DAY
Annual Growth: 0.82%

N-S St: Rosemead Boulevard (SR-164)
E-W St: Glendon Way-I-10 Fwy WB Ramps
Project: Flair Spectrum Project/1-14-4074-1
File: ICU5

Date: 09/27/2014
Date of Count: 2014
Projection Year: 2016

Phase I

	2014 EXIST. TRAFFIC			2014 EXISTING WITH PROJECT				2014 EXIST. W/PROJECT + MITIGATION				2016 FUTURE WITHOUT PROJECT				2016 FUTURE WITH PROJECT				2016 FUTURE W/PROJECT + MITIGATION			
	1	2	V/C	Added	Total	2	V/C	Added	Total	2	V/C	Added	Total	2	V/C	Added	Total	2	V/C	Added	Total	2	V/C
Movement	Volume	Capacity	Ratio	Volume	Volume	Capacity	Ratio	Volume	Volume	Capacity	Ratio	Volume	Volume	Capacity	Ratio	Volume	Volume	Capacity	Ratio	Volume	Volume	Capacity	Ratio
Nb Left	138	1600	0.086 *	0	138	1600	0.086	0	138	1600	0.086	2	140	1600	0.088 *	0	140	1600	0.088	0	140	1600	0.088
Nb Thru	1685	4800	0.449	110	1795	4800	0.544 *	0	1795	4800	0.544 *	63	1748	4800	0.464	110	1858	4800	0.559 *	0	1858	4800	0.559 *
Nb Right	472	0	-	344	816	0	-	0	816	0	-	10	482	0	-	344	826	0	-	0	826	0	-
Sb Left	0	0	0.000	0	0	0	0.000	0	0	0	0.000	0	0	0	0.000	0	0	0	0.000	0	0	0	0.000
Sb Thru	1305	3200	0.408 *	120	1425	3200	0.445	0	1425	3200	0.445	58	1363	3200	0.426 *	120	1483	3200	0.464	0	1483	3200	0.464
Sb Right	540	1600	0.338	0	540	1600	0.338	0	540	1600	0.338	9	549	1600	0.343	0	549	1600	0.343	0	549	1600	0.343
Eb Left	35	1600	0.022 *	0	35	1600	0.022 *	0	35	1600	0.022 *	1	36	1600	0.022 *	0	36	1600	0.022 *	0	36	1600	0.022 *
Eb Thru	0	0	0.000	0	0	0	0.000	0	0	0	0.000	0	0	0	0.000	0	0	0	0.000	0	0	0	0.000
Eb Right	114	1600	0.071	0	114	1600	0.071	0	114	1600	0.071	2	116	1600	0.072	0	116	1600	0.072	0	116	1600	0.072
Wb Left	162	0	0.101	0	162	0	0.101	0	162	0	0.101	3	165	0	0.103	0	165	0	0.103	0	165	0	0.103
Wb Thru	87	1600	0.156	0	87	1600	0.156	0	87	1600	0.156	1	88	1600	0.158	0	88	1600	0.158	0	88	1600	0.158
Wb Right	260	1600	0.163 *	0	260	1600	0.163 *	0	260	1600	0.163 *	4	264	1600	0.165 *	0	264	1600	0.165 *	0	264	1600	0.165 *
Yellow Allowance:			0.100 *				0.100 *				0.100 *				0.100 *				0.100 *				0.100 *
ICU			0.778				0.828				0.828				0.801				0.846				0.846
LOS			C				D				D				D				D				D

** Key conflicting movement as a part of ICU*
1 Counts conducted by: The Traffic Solution
2 Capacity expressed in veh/hour of green

LINSCOTT, LAW & GREENSPAN, ENGINEERS
600 S. Lake Avenue, Suite 500, Pasadena CA 91106
(626) 796.2322 Fax (626) 792-0941

INTERSECTION CAPACITY UTILIZATION

Rosemead Boulevard (SR-164) @ Glendon Way-I-10 Fwy WB Ramps
Peak hr: AM
Annual Growth: 0.82%

Phases I & II

N-S St: Rosemead Boulevard (SR-164)
E-W St: Glendon Way-I-10 Fwy WB Ramps
Project: Flair Spectrum Project/1-14-4074-1
File: ICU5

Date: 09/27/2014
Date of Count: 2014
Projection Year: 2019

	2014 EXIST. TRAFFIC			2014 EXISTING WITH PROJECT				2014 EXIST. W/PROJECT + MITIGATION				2019 FUTURE WITHOUT PROJECT				2019 FUTURE WITH PROJECT				2019 FUTURE W/PROJECT + MITIGATION			
	1	2	V/C	Added	Total	2	V/C	Added	Total	2	V/C	Added	Total	2	V/C	Added	Total	2	V/C	Added	Total	2	V/C
Movement	Volume	Capacity	Ratio	Volume	Volume	Capacity	Ratio	Volume	Volume	Capacity	Ratio	Volume	Volume	Capacity	Ratio	Volume	Volume	Capacity	Ratio	Volume	Volume	Capacity	Ratio
Nb Left	89	1600	0.056	0	89	1600	0.056	0	89	1600	0.056	4	93	1600	0.058	0	93	1600	0.058	0	93	1600	0.058
Nb Thru	1632	4800	0.394	32	1664	4800	0.424	0	1664	4800	0.424	130	1762	4800	0.423	32	1794	4800	0.454	0	1794	4800	0.454
Nb Right	257	0	-	116	373	0	-	0	373	0	-	13	270	0	-	116	386	0	-	0	386	0	-
Sb Left	0	0	0.000	0	0	0	0.000	0	0	0	0.000	0	0	0	0.000	0	0	0	0.000	0	0	0	0.000
Sb Thru	1560	3200	0.488 *	38	1598	3200	0.499 *	0	1598	3200	0.499 *	151	1711	3200	0.535 *	38	1749	3200	0.547 *	0	1749	3200	0.547 *
Sb Right	296	1600	0.185	0	296	1600	0.185	0	296	1600	0.185	12	308	1600	0.193	0	308	1600	0.193	0	308	1600	0.193
Eb Left	15	1600	0.009	0	15	1600	0.009	0	15	1600	0.009	1	16	1600	0.010	0	16	1600	0.010	0	16	1600	0.010
Eb Thru	0	0	0.000	0	0	0	0.000	0	0	0	0.000	0	0	0	0.000	0	0	0	0.000	0	0	0	0.000
Eb Right	187	1600	0.117 *	0	187	1600	0.117 *	0	187	1600	0.117 *	8	195	1600	0.122 *	0	195	1600	0.122 *	0	195	1600	0.122 *
Wb Left	67	0	0.042 *	0	67	0	0.042 *	0	67	0	0.042 *	3	70	0	0.044 *	0	70	0	0.044 *	0	70	0	0.044 *
Wb Thru	37	1600	0.065	0	37	1600	0.065	0	37	1600	0.065	2	39	1600	0.068	0	39	1600	0.068	0	39	1600	0.068
Wb Right	225	1600	0.141	0	225	1600	0.141	0	225	1600	0.141	11	236	1600	0.148	0	236	1600	0.148	0	236	1600	0.148
Yellow Allowance:			0.100 *				0.100 *				0.100 *				0.100 *				0.100 *				0.100 *
ICU			0.802				0.814				0.814				0.858				0.870				0.870
LOS			D				D				D				D				D				D

** Key conflicting movement as a part of ICU*
1 Counts conducted by: The Traffic Solution
2 Capacity expressed in veh/hour of green

LINSCOTT, LAW & GREENSPAN, ENGINEERS
600 S. Lake Avenue, Suite 500, Pasadena CA 91106
(626) 796.2322 Fax (626) 792-0941

INTERSECTION CAPACITY UTILIZATION

Rosemead Boulevard (SR-164) @ Glendon Way-I-10 Fwy WB Ramps
Peak hr: PM
Annual Growth: 0.82%

Phases I & II

N-S St: Rosemead Boulevard (SR-164)
E-W St: Glendon Way-I-10 Fwy WB Ramps
Project: Flair Spectrum Project/1-14-4074-1
File: ICU5

Date: 09/27/2014
Date of Count: 2014
Projection Year: 2019

	2014 EXIST. TRAFFIC			2014 EXISTING WITH PROJECT				2014 EXIST. W/PROJECT + MITIGATION				2019 FUTURE WITHOUT PROJECT				2019 FUTURE WITH PROJECT				2019 FUTURE W/PROJECT + MITIGATION			
	1	2	V/C	Added	Total	2	V/C	Added	Total	2	V/C	Added	Total	2	V/C	Added	Total	2	V/C	Added	Total	2	V/C
Movement	Volume	Capacity	Ratio	Volume	Volume	Capacity	Ratio	Volume	Volume	Capacity	Ratio	Volume	Volume	Capacity	Ratio	Volume	Volume	Capacity	Ratio	Volume	Volume	Capacity	Ratio
Nb Left	159	1600	0.099	0	159	1600	0.099	0	159	1600	0.099	7	166	1600	0.104	0	166	1600	0.104	0	166	1600	0.104
Nb Thru	2087	4800	0.569 *	71	2158	4800	0.632 *	0	2158	4800	0.632 *	155	2242	4800	0.610 *	71	2313	4800	0.673 *	0	2313	4800	0.673 *
Nb Right	645	0	-	229	874	0	-	0	874	0	-	42	687	0	-	229	916	0	-	0	916	0	-
Sb Left	0	0	0.000	0	0	0	0.000	0	0	0	0.000	0	0	0	0.000	0	0	0	0.000	0	0	0	0.000
Sb Thru	1175	3200	0.367	81	1256	3200	0.393	0	1256	3200	0.393	118	1293	3200	0.404	81	1374	3200	0.429	0	1374	3200	0.429
Sb Right	442	1600	0.276	0	442	1600	0.276	0	442	1600	0.276	18	460	1600	0.288	0	460	1600	0.288	0	460	1600	0.288
Eb Left	24	1600	0.015 *	0	24	1600	0.015 *	0	24	1600	0.015 *	1	25	1600	0.016 *	0	25	1600	0.016 *	0	25	1600	0.016 *
Eb Thru	0	0	0.000	0	0	0	0.000	0	0	0	0.000	0	0	0	0.000	0	0	0	0.000	0	0	0	0.000
Eb Right	112	1600	0.070	0	112	1600	0.070	0	112	1600	0.070	5	117	1600	0.073	0	117	1600	0.073	0	117	1600	0.073
Wb Left	125	0	0.078	0	125	0	0.078	0	125	0	0.078	5	130	0	0.081	0	130	0	0.081	0	130	0	0.081
Wb Thru	92	1600	0.136	0	92	1600	0.136	0	92	1600	0.136	4	96	1600	0.141	0	96	1600	0.141	0	96	1600	0.141
Wb Right	250	1600	0.156 *	0	250	1600	0.156 *	0	250	1600	0.156 *	11	261	1600	0.163 *	0	261	1600	0.163 *	0	261	1600	0.163 *
Yellow Allowance:			0.100 *				0.100 *				0.100 *				0.100 *				0.100 *				0.100 *
ICU			0.840				0.903				0.903				0.889				0.952				0.952
LOS			D				E				E				D				E				E

** Key conflicting movement as a part of ICU*
1 Counts conducted by: The Traffic Solution
2 Capacity expressed in veh/hour of green

LINSCOTT, LAW & GREENSPAN, ENGINEERS
600 S. Lake Avenue, Suite 500, Pasadena CA 91106
(626) 796.2322 Fax (626) 792-0941

INTERSECTION CAPACITY UTILIZATION

Rosemead Boulevard (SR-164) @ Glendon Way-I-10 Fwy WB Ramps
Peak hr: SAT MID-DAY
Annual Growth: 0.82%

Phases I & II

N-S St: Rosemead Boulevard (SR-164)
E-W St: Glendon Way-I-10 Fwy WB Ramps
Project: Flair Spectrum Project/1-14-4074-1
File: ICU5

Date: 09/27/2014
Date of Count: 2014
Projection Year: 2019

	2014 EXIST. TRAFFIC			2014 EXISTING WITH PROJECT				2014 EXIST. W/PROJECT + MITIGATION				2019 FUTURE WITHOUT PROJECT				2019 FUTURE WITH PROJECT				2019 FUTURE W/PROJECT + MITIGATION			
	1	2	V/C	Added	Total	2	V/C	Added	Total	2	V/C	Added	Total	2	V/C	Added	Total	2	V/C	Added	Total	2	V/C
Movement	Volume	Capacity	Ratio	Volume	Volume	Capacity	Ratio	Volume	Volume	Capacity	Ratio	Volume	Volume	Capacity	Ratio	Volume	Volume	Capacity	Ratio	Volume	Volume	Capacity	Ratio
Nb Left	138	1600	0.086 *	0	138	1600	0.086	0	138	1600	0.086	6	144	1600	0.090 *	0	144	1600	0.090	0	144	1600	0.090
Nb Thru	1685	4800	0.449	120	1805	4800	0.553 *	0	1805	4800	0.553 *	105	1790	4800	0.476	120	1910	4800	0.579 *	0	1910	4800	0.579 *
Nb Right	472	0	-	377	849	0	-	0	849	0	-	22	494	0	-	377	871	0	-	0	871	0	-
Sb Left	0	0	0.000	0	0	0	0.000	0	0	0	0.000	0	0	0	0.000	0	0	0	0.000	0	0	0	0.000
Sb Thru	1305	3200	0.408 *	132	1437	3200	0.449	0	1437	3200	0.449	91	1396	3200	0.436 *	132	1528	3200	0.478	0	1528	3200	0.478
Sb Right	540	1600	0.338	0	540	1600	0.338	0	540	1600	0.338	23	563	1600	0.352	0	563	1600	0.352	0	563	1600	0.352
Eb Left	35	1600	0.022 *	0	35	1600	0.022 *	0	35	1600	0.022 *	1	36	1600	0.023 *	0	36	1600	0.023 *	0	36	1600	0.023 *
Eb Thru	0	0	0.000	0	0	0	0.000	0	0	0	0.000	0	0	0	0.000	0	0	0	0.000	0	0	0	0.000
Eb Right	114	1600	0.071	0	114	1600	0.071	0	114	1600	0.071	5	119	1600	0.074	0	119	1600	0.074	0	119	1600	0.074
Wb Left	162	0	0.101	0	162	0	0.101	0	162	0	0.101	7	169	0	0.105	0	169	0	0.105	0	169	0	0.105
Wb Thru	87	1600	0.156	0	87	1600	0.156	0	87	1600	0.156	4	91	1600	0.162	0	91	1600	0.162	0	91	1600	0.162
Wb Right	260	1600	0.163 *	0	260	1600	0.163 *	0	260	1600	0.163 *	11	271	1600	0.169 *	0	271	1600	0.169 *	0	271	1600	0.169 *
Yellow Allowance:			0.100 *				0.100 *				0.100 *				0.100 *				0.100 *				0.100 *
ICU			0.778				0.837				0.837				0.818				0.871				0.871
LOS			C				D				D				D				D				D

** Key conflicting movement as a part of ICU*
1 Counts conducted by: The Traffic Solution
2 Capacity expressed in veh/hour of green

LINSCOTT, LAW & GREENSPAN, ENGINEERS
600 S. Lake Avenue, Suite 500, Pasadena CA 91106
(626) 796.2322 Fax (626) 792-0941

INTERSECTION CAPACITY UTILIZATION

N-S St: Rosemead Boulevard (SR-164)
E-W St: Glendon Way-I-10 Fwy WB Ramps
Project: Flair Spectrum Project/1-14-4074-1
File: ICU5

Rosemead Boulevard (SR-164) @ Glendon Way-I-10 Fwy WB Ramps
Peak hr: AM
Annual Growth: 0.52%

General Plan Buildout (Phases I & II)

Date: 09/27/2014
Date of Count: 2014
Projection Year: 2035

	2014 EXIST. TRAFFIC			2014 EXISTING WITH PROJECT				2014 EXIST. W/PROJECT + MITIGATION				2035 FUTURE WITHOUT PROJECT				2035 FUTURE WITH PROJECT				2035 FUTURE W/PROJECT + MITIGATION			
	1	2	V/C	Added	Total	2	V/C	Added	Total	2	V/C	Added	Total	2	V/C	Added	Total	2	V/C	Added	Total	2	V/C
Movement	Volume	Capacity	Ratio	Volume	Volume	Capacity	Ratio	Volume	Volume	Capacity	Ratio	Volume	Volume	Capacity	Ratio	Volume	Volume	Capacity	Ratio	Volume	Volume	Capacity	Ratio
Nb Left	89	1600	0.056	0	89	1600	0.056	0	89	1600	0.056	10	99	1600	0.062	0	99	1600	0.062	0	99	1600	0.062
Nb Thru	1632	4800	0.394	32	1664	4800	0.424	0	1664	4800	0.424	250	1882	4800	0.452	32	1914	4800	0.483	0	1914	4800	0.483
Nb Right	257	0	-	116	373	0	-	0	373	0	-	32	289	0	-	116	405	0	-	0	405	0	-
Sb Left	0	0	0.000	0	0	0	0.000	0	0	0	0.000	0	0	0	0.000	0	0	0	0.000	0	0	0	0.000
Sb Thru	1560	3200	0.488 *	38	1598	3200	0.499 *	0	1598	3200	0.499 *	266	1826	3200	0.570 *	38	1864	3200	0.582 *	0	1864	3200	0.582 *
Sb Right	296	1600	0.185	0	296	1600	0.185	0	296	1600	0.185	34	330	1600	0.206	0	330	1600	0.206	0	330	1600	0.206
Eb Left	15	1600	0.009	0	15	1600	0.009	0	15	1600	0.009	2	17	1600	0.010	0	17	1600	0.010	0	17	1600	0.010
Eb Thru	0	0	0.000	0	0	0	0.000	0	0	0	0.000	0	0	0	0.000	0	0	0	0.000	0	0	0	0.000
Eb Right	187	1600	0.117 *	0	187	1600	0.117 *	0	187	1600	0.117 *	22	209	1600	0.130 *	0	209	1600	0.130 *	0	209	1600	0.130 *
Wb Left	67	0	0.042 *	0	67	0	0.042 *	0	67	0	0.042 *	8	75	0	0.047 *	0	75	0	0.047 *	0	75	0	0.047 *
Wb Thru	37	1600	0.065	0	37	1600	0.065	0	37	1600	0.065	4	41	1600	0.072	0	41	1600	0.072	0	41	1600	0.072
Wb Right	225	1600	0.141	0	225	1600	0.141	0	225	1600	0.141	28	253	1600	0.158	0	253	1600	0.158	0	253	1600	0.158
Yellow Allowance:			0.100 *				0.100 *				0.100 *				0.100 *				0.100 *				0.100 *
ICU			0.802				0.814				0.814				0.910				0.921				0.871
LOS			D				D				D				E				E				D

** Key conflicting movement as a part of ICU*
1 Counts conducted by: The Traffic Solution
2 Capacity expressed in veh/hour of green

LINSCOTT, LAW & GREENSPAN, ENGINEERS
600 S. Lake Avenue, Suite 500, Pasadena CA 91106
(626) 796.2322 Fax (626) 792-0941

INTERSECTION CAPACITY UTILIZATION

Rosemead Boulevard (SR-164) @ Glendon Way-I-10 Fwy WB Ramps
Peak hr: PM
Annual Growth: 0.52%

General Plan Buildout (Phases I & II)

N-S St: Rosemead Boulevard (SR-164)
E-W St: Glendon Way-I-10 Fwy WB Ramps
Project: Flair Spectrum Project/1-14-4074-1
File: ICU5

Date: 09/27/2014
Date of Count: 2014
Projection Year: 2035

	2014 EXIST. TRAFFIC			2014 EXISTING WITH PROJECT				2014 EXIST. W/PROJECT + MITIGATION				2035 FUTURE WITHOUT PROJECT				2035 FUTURE WITH PROJECT				2035 FUTURE W/PROJECT + MITIGATION			
	1	2	V/C	Added	Total	2	V/C	Added	Total	2	V/C	Added	Total	2	V/C	Added	Total	2	V/C	Added	Total	2	V/C
Movement	Volume	Capacity	Ratio	Volume	Volume	Capacity	Ratio	Volume	Volume	Capacity	Ratio	Volume	Volume	Capacity	Ratio	Volume	Volume	Capacity	Ratio	Volume	Volume	Capacity	Ratio
Nb Left	159	1600	0.099	0	159	1600	0.099	0	159	1600	0.099	18	177	1600	0.111	0	177	1600	0.111	0	177	1600	0.111
Nb Thru	2087	4800	0.569 *	71	2158	4800	0.632 *	0	2158	4800	0.632 *	308	2395	4800	0.652 *	71	2466	4800	0.714 *	0	2466	4800	0.714 *
Nb Right	645	0	-	229	874	0	-	0	874	0	-	89	734	0	-	229	963	0	-	0	963	0	-
Sb Left	0	0	0.000	0	0	0	0.000	0	0	0	0.000	0	0	0	0.000	0	0	0	0.000	0	0	0	0.000
Sb Thru	1175	3200	0.367	81	1256	3200	0.393	0	1256	3200	0.393	204	1379	3200	0.431	81	1460	3200	0.456	0	1460	3200	0.456
Sb Right	442	1600	0.276	0	442	1600	0.276	0	442	1600	0.276	51	493	1600	0.308	0	493	1600	0.308	0	493	1600	0.308
Eb Left	24	1600	0.015 *	0	24	1600	0.015 *	0	24	1600	0.015 *	3	27	1600	0.017 *	0	27	1600	0.017 *	0	27	1600	0.017 *
Eb Thru	0	0	0.000	0	0	0	0.000	0	0	0	0.000	0	0	0	0.000	0	0	0	0.000	0	0	0	0.000
Eb Right	112	1600	0.070	0	112	1600	0.070	0	112	1600	0.070	13	125	1600	0.078	0	125	1600	0.078	0	125	1600	0.078
Wb Left	125	0	0.078	0	125	0	0.078	0	125	0	0.078	14	139	0	0.087	0	139	0	0.087	0	139	0	0.087
Wb Thru	92	1600	0.136	0	92	1600	0.136	0	92	1600	0.136	11	103	1600	0.151	0	103	1600	0.151	0	103	1600	0.151
Wb Right	250	1600	0.156 *	0	250	1600	0.156 *	0	250	1600	0.156 *	30	280	1600	0.175 *	0	280	1600	0.175 *	0	280	1600	0.175 *
Yellow Allowance:			0.100 *				0.100 *				0.100 *				0.100 *				0.100 *				0.100 *
ICU			0.840				0.903				0.903				0.944				1.006				0.956
LOS			D				E				E				E				F				E

** Key conflicting movement as a part of ICU*
1 Counts conducted by: The Traffic Solution
2 Capacity expressed in veh/hour of green

LINSCOTT, LAW & GREENSPAN, ENGINEERS
600 S. Lake Avenue, Suite 500, Pasadena CA 91106
(626) 796.2322 Fax (626) 792-0941

INTERSECTION CAPACITY UTILIZATION

N-S St: Rosemead Boulevard (SR-164)
E-W St: Glendon Way-I-10 Fwy WB Ramps
Project: Flair Spectrum Project/1-14-4074-1
File: ICU5

Rosemead Boulevard (SR-164) @ Glendon Way-I-10 Fwy WB Ramps
Peak hr: SAT MID-DAY
Annual Growth: 0.52%

General Plan Buildout (Phases I & II)

Date: 09/27/2014
Date of Count: 2014
Projection Year: 2035

	2014 EXIST. TRAFFIC			2014 EXISTING WITH PROJECT				2014 EXIST. W/PROJECT + MITIGATION				2035 FUTURE WITHOUT PROJECT				2035 FUTURE WITH PROJECT				2035 FUTURE W/PROJECT + MITIGATION			
	1	2	V/C	Added	Total	2	V/C	Added	Total	2	V/C	Added	Total	2	V/C	Added	Total	2	V/C	Added	Total	2	V/C
Movement	Volume	Capacity	Ratio	Volume	Volume	Capacity	Ratio	Volume	Volume	Capacity	Ratio	Volume	Volume	Capacity	Ratio	Volume	Volume	Capacity	Ratio	Volume	Volume	Capacity	Ratio
Nb Left	138	1600	0.086 *	0	138	1600	0.086	0	138	1600	0.086	16	154	1600	0.096 *	0	154	1600	0.096	0	154	1600	0.096
Nb Thru	1685	4800	0.449	120	1805	4800	0.553 *	0	1805	4800	0.553 *	229	1914	4800	0.509	120	2034	4800	0.612 *	0	2034	4800	0.612 *
Nb Right	472	0	-	377	849	0	-	0	849	0	-	56	528	0	-	377	905	0	-	0	905	0	-
Sb Left	0	0	0.000	0	0	0	0.000	0	0	0	0.000	0	0	0	0.000	0	0	0	0.000	0	0	0	0.000
Sb Thru	1305	3200	0.408 *	132	1437	3200	0.449	0	1437	3200	0.449	187	1492	3200	0.466 *	132	1624	3200	0.508	0	1624	3200	0.508
Sb Right	540	1600	0.338	0	540	1600	0.338	0	540	1600	0.338	62	602	1600	0.376	0	602	1600	0.376	0	602	1600	0.376
Eb Left	35	1600	0.022 *	0	35	1600	0.022 *	0	35	1600	0.022 *	4	39	1600	0.024 *	0	39	1600	0.024 *	0	39	1600	0.024 *
Eb Thru	0	0	0.000	0	0	0	0.000	0	0	0	0.000	0	0	0	0.000	0	0	0	0.000	0	0	0	0.000
Eb Right	114	1600	0.071	0	114	1600	0.071	0	114	1600	0.071	13	127	1600	0.079	0	127	1600	0.079	0	127	1600	0.079
Wb Left	162	0	0.101	0	162	0	0.101	0	162	0	0.101	19	181	0	0.113	0	181	0	0.113	0	181	0	0.113
Wb Thru	87	1600	0.156	0	87	1600	0.156	0	87	1600	0.156	10	97	1600	0.174	0	97	1600	0.174	0	97	1600	0.174
Wb Right	260	1600	0.163 *	0	260	1600	0.163 *	0	260	1600	0.163 *	30	290	1600	0.181 *	0	290	1600	0.181 *	0	290	1600	0.181 *
Yellow Allowance:			0.100 *				0.100 *				0.100 *				0.100 *				0.100 *				0.100 *
ICU			0.778				0.837				0.837				0.868				0.918				0.868
LOS			C				D				D				D				E				D

** Key conflicting movement as a part of ICU*
1 Counts conducted by: The Traffic Solution
2 Capacity expressed in veh/hour of green

LINSCOTT, LAW & GREENSPAN, ENGINEERS
600 S. Lake Avenue, Suite 500, Pasadena CA 91106
(626) 796.2322 Fax (626) 792-0941

INTERSECTION CAPACITY UTILIZATION

Rosemead Boulevard (SR-164) @ I-10 Fwy EB Ramps
Peak hr: AM
Annual Growth: 0.82%

Phase I

N-S St: Rosemead Boulevard (SR-164)
E-W St: I-10 Fwy EB Ramps
Project: Flair Spectrum Project/1-14-4074-1
File: ICU6

Date: 09/15/2014
Date of Count: 2014
Projection Year: 2016

	2014 EXIST. TRAFFIC		2014 EXISTING WITH PROJECT			2014 EXIST. W/PROJECT + MITIGATION			2016 FUTURE WITHOUT PROJECT			2016 FUTURE WITH PROJECT			2016 FUTURE W/PROJECT + MITIGATION		
	1	2	Added	Total	2	Added	Total	2	Added	Total	2	Added	Total	2	Added	Total	2
Movement	Volume	Capacity	Volume	Volume	Capacity	Volume	Volume	Capacity	Volume	Volume	Capacity	Volume	Volume	Capacity	Volume	Volume	Capacity
Nb Left	0	0	0	0	0	0	0	0	0	0	0	0	0	0	0	0	0
Nb Thru [3]	1553	4800	75	1628	4800	0	1628	4800	254	1807	4800	75	1882	4800	0	1882	4800
Nb Right [3]	238	1600	0	238	1600	0	238	1600	34	272	1600	0	272	1600	0	272	1600
Sb Left	0	0	0	0	0	0	0	0	0	0	0	0	0	0	0	0	0
Sb Thru [3]	1709	4800	72	1781	4800	0	1781	4800	333	2042	4800	72	2114	4800	0	2114	4800
Sb Right [3]	626	1600	0	626	1600	0	626	1600	73	699	1600	0	699	1600	0	699	1600
Eb Left	0	0	0	0	0	0	0	0	0	0	0	0	0	0	0	0	0
Eb Thru	0	0	0	0	0	0	0	0	0	0	0	0	0	0	0	0	0
Eb Right [4]	610	1600	35	645	1600	0	645	1600	86	696	1600	35	731	1600	0	731	1600
Wb Left	0	0	0	0	0	0	0	0	0	0	0	0	0	0	0	0	0
Wb Thru	0	0	0	0	0	0	0	0	0	0	0	0	0	0	0	0	0
Wb Right [4	402	1600	0	402	1600	0	402	1600	63	465	1600	0	465	1600	0	465	1600

Yellow Allowance:
(Existing Unsignalized - Yield Conditions Only)

ICU	N/A	N/A	N/A	N/A	N/A
LOS	N/A	N/A	N/A	N/A	N/A

** Key conflicting movement as a part of ICU*
1 Counts conducted by: City Traffic Counters
2 Capacity expressed in veh/hour of green
3 Free-flow movement.
4 Yield movement.

LINSCOTT, LAW & GREENSPAN, ENGINEERS
600 S. Lake Avenue, Suite 500, Pasadena CA 91106
(626) 796.2322 Fax (626) 792-0941

INTERSECTION CAPACITY UTILIZATION

Rosemead Boulevard (SR-164) @ I-10 Fwy EB Ramps
Peak hr: PM
Annual Growth: 0.82%

Phase I

N-S St: Rosemead Boulevard (SR-164)
E-W St: I-10 Fwy EB Ramps
Project: Flair Spectrum Project/1-14-4074-1
File: ICU6

Date: 09/15/2014
Date of Count: 2014
Projection Year: 2016

	2014 EXIST. TRAFFIC		2014 EXISTING WITH PROJECT			2014 EXIST. W/PROJECT + MITIGATION			2016 FUTURE WITHOUT PROJECT			2016 FUTURE WITH PROJECT			2016 FUTURE W/PROJECT + MITIGATION		
	1	2	Added	Total	2	Added	Total	2	Added	Total	2	Added	Total	2	Added	Total	2
Movement	Volume	Capacity	Volume	Volume	Capacity	Volume	Volume	Capacity	Volume	Volume	Capacity	Volume	Volume	Capacity	Volume	Volume	Capacity
Nb Left	0	0	0	0	0	0	0	0	0	0	0	0	0	0	0	0	0
Nb Thru [3]	2366	4800	267	2633	4800	0	2633	4800	375	2741	4800	267	3008	4800	0	3008	4800
Nb Right [3]	231	1600	0	231	1600	0	231	1600	54	285	1600	0	285	1600	0	285	1600
Sb Left	0	0	0	0	0	0	0	0	0	0	0	0	0	0	0	0	0
Sb Thru [3]	1370	4800	124	1494	4800	0	1494	4800	250	1620	4800	124	1744	4800	0	1744	4800
Sb Right [3]	252	1600	0	252	1600	0	252	1600	31	283	1600	0	283	1600	0	283	1600
Eb Left	0	0	0	0	0	0	0	0	0	0	0	0	0	0	0	0	0
Eb Thru	0	0	0	0	0	0	0	0	0	0	0	0	0	0	0	0	0
Eb Right [4]	535	1600	59	594	1600	0	594	1600	69	604	1600	59	663	1600	0	663	1600
Wb Left	0	0	0	0	0	0	0	0	0	0	0	0	0	0	0	0	0
Wb Thru	0	0	0	0	0	0	0	0	0	0	0	0	0	0	0	0	0
Wb Right [4	543	1600	0	543	1600	0	543	1600	65	608	1600	0	608	1600	0	608	1600

Yellow Allowance:
(Existing Unsignalized - Yield Conditions Only)

ICU	N/A	N/A	N/A	N/A	N/A	N/A
LOS	N/A	N/A	N/A	N/A	N/A	N/A

** Key conflicting movement as a part of ICU*
1 Counts conducted by: City Traffic Counters
2 Capacity expressed in veh/hour of green
3 Free-flow movement.
4 Yield movement.

LINSCOTT, LAW & GREENSPAN, ENGINEERS
600 S. Lake Avenue, Suite 500, Pasadena CA 91106
(626) 796.2322 Fax (626) 792-0941

INTERSECTION CAPACITY UTILIZATION

Rosemead Boulevard (SR-164) @ I-10 Fwy EB Ramps
Peak hr: SAT MID-DAY
Annual Growth: 0.82%

Phase I

N-S St: Rosemead Boulevard (SR-164)
E-W St: I-10 Fwy EB Ramps
Project: Flair Spectrum Project/1-14-4074-1
File: ICU6

Date: 09/15/2014
Date of Count: 2014
Projection Year: 2016

	2014 EXIST. TRAFFIC		2014 EXISTING WITH PROJECT			2014 EXIST. W/PROJECT + MITIGATION			2016 FUTURE WITHOUT PROJECT			2016 FUTURE WITH PROJECT			2016 FUTURE W/PROJECT + MITIGATION		
	1	2	Added	Total	2	Added	Total	2	Added	Total	2	Added	Total	2	Added	Total	2
Movement	Volume	Capacity	Volume	Volume	Capacity	Volume	Volume	Capacity	Volume	Volume	Capacity	Volume	Volume	Capacity	Volume	Volume	Capacity
Nb Left	0	0	0	0	0	0	0	0	0	0	0	0	0	0	0	0	0
Nb Thru [3]	1679	4800	452	2131	4800	0	2131	4800	239	1918	4800	452	2370	4800	0	2370	4800
Nb Right [3]	340	1600	0	340	1600	0	340	1600	46	386	1600	0	386	1600	0	386	1600
Sb Left	0	0	0	0	0	0	0	0	0	0	0	0	0	0	0	0	0
Sb Thru [3]	1503	4800	227	1730	4800	0	1730	4800	226	1729	4800	227	1956	4800	0	1956	4800
Sb Right [3]	336	1600	0	336	1600	0	336	1600	39	375	1600	0	375	1600	0	375	1600
Eb Left	0	0	0	0	0	0	0	0	0	0	0	0	0	0	0	0	0
Eb Thru	0	0	0	0	0	0	0	0	0	0	0	0	0	0	0	0	0
Eb Right [4]	373	1600	106	479	1600	0	479	1600	49	422	1600	106	528	1600	0	528	1600
Wb Left	0	0	0	0	0	0	0	0	0	0	0	0	0	0	0	0	0
Wb Thru	0	0	0	0	0	0	0	0	0	0	0	0	0	0	0	0	0
Wb Right [4	485	1600	0	485	1600	0	485	1600	59	544	1600	0	544	1600	0	544	1600
Yellow Allowance: (Existing Unsignalized - Yield Conditions Only)																	
ICU	N/A		N/A			N/A			N/A			N/A			N/A		
LOS	N/A		N/A			N/A			N/A			N/A			N/A		

** Key conflicting movement as a part of ICU*
1 Counts conducted by: City Traffic Counters
2 Capacity expressed in veh/hour of green
3 Free-flow movement.
4 Yield movement.

LINSCOTT, LAW & GREENSPAN, ENGINEERS
600 S. Lake Avenue, Suite 500, Pasadena CA 91106
(626) 796.2322 Fax (626) 792-0941

INTERSECTION CAPACITY UTILIZATION

Rosemead Boulevard (SR-164) @ I-10 Fwy EB Ramps
Peak hr: AM
Annual Growth: 0.82%

Phases I & II

N-S St: Rosemead Boulevard (SR-164)
E-W St: I-10 Fwy EB Ramps
Project: Flair Spectrum Project/1-14-4074-1
File: ICU6

Date: 09/15/2014
Date of Count: 2014
Projection Year: 2019

	2014 EXIST. TRAFFIC		2014 EXISTING WITH PROJECT			2014 EXIST. W/PROJECT + MITIGATION			2019 FUTURE WITHOUT PROJECT			2019 FUTURE WITH PROJECT			2019 FUTURE W/PROJECT + MITIGATION		
	1	2	Added	Total	2	Added	Total	2	Added	Total	2	Added	Total	2	Added	Total	2
Movement	Volume	Capacity	Volume	Volume	Capacity	Volume	Volume	Capacity	Volume	Volume	Capacity	Volume	Volume	Capacity	Volume	Volume	Capacity
Nb Left	0	0	0	0	0	0	0	0	0	0	0	0	0	0	0	0	0
Nb Thru [3]	1553	4800	148	1701	4800	0	1701	4800	140	1693	4800	148	1841	4800	0	1841	4800
Nb Right [3]	238	1600	0	238	1600	0	238	1600	17	255	1600	0	255	1600	0	255	1600
Sb Left	0	0	0	0	0	0	0	0	0	0	0	0	0	0	0	0	0
Sb Thru [3]	1709	4800	79	1788	4800	0	1788	4800	207	1916	4800	79	1995	4800	0	1995	4800
Sb Right [3]	626	1600	0	626	1600	0	626	1600	27	653	1600	0	653	1600	0	653	1600
Eb Left	0	0	0	0	0	0	0	0	0	0	0	0	0	0	0	0	0
Eb Thru	0	0	0	0	0	0	0	0	0	0	0	0	0	0	0	0	0
Eb Right [4]	610	1600	39	649	1600	0	649	1600	41	651	1600	39	690	1600	0	690	1600
Wb Left	0	0	0	0	0	0	0	0	0	0	0	0	0	0	0	0	0
Wb Thru	0	0	0	0	0	0	0	0	0	0	0	0	0	0	0	0	0
Wb Right [4	402	1600	0	402	1600	0	402	1600	34	436	1600	0	436	1600	0	436	1600

Yellow Allowance:
(Existing Unsignalized - Yield Conditions Only)

ICU	N/A	N/A	N/A	N/A	N/A	N/A
LOS	N/A	N/A	N/A	N/A	N/A	N/A

** Key conflicting movement as a part of ICU*
1 Counts conducted by: City Traffic Counters
2 Capacity expressed in veh/hour of green
3 Free-flow movement.
4 Yield movement.

LINSCOTT, LAW & GREENSPAN, ENGINEERS
600 S. Lake Avenue, Suite 500, Pasadena CA 91106
(626) 796.2322 Fax (626) 792-0941

INTERSECTION CAPACITY UTILIZATION

Rosemead Boulevard (SR-164) @ I-10 Fwy EB Ramps
Peak hr: PM
Annual Growth: 0.82%

Phases I & II

N-S St: Rosemead Boulevard (SR-164)
E-W St: I-10 Fwy EB Ramps
Project: Flair Spectrum Project/1-14-4074-1
File: ICU6

Date: 09/15/2014
Date of Count: 2014
Projection Year: 2019

	2014 EXIST. TRAFFIC		2014 EXISTING WITH PROJECT			2014 EXIST. W/PROJECT + MITIGATION			2019 FUTURE WITHOUT PROJECT			2019 FUTURE WITH PROJECT			2019 FUTURE W/PROJECT + MITIGATION		
	1	2	Added	Total	2	Added	Total	2	Added	Total	2	Added	Total	2	Added	Total	2
Movement	Volume	Capacity	Volume	Volume	Capacity	Volume	Volume	Capacity	Volume	Volume	Capacity	Volume	Volume	Capacity	Volume	Volume	Capacity
Nb Left	0	0	0	0	0	0	0	0	0	0	0	0	0	0	0	0	0
Nb Thru [3]	2366	4800	301	2667	4800	0	2667	4800	202	2568	4800	301	2869	4800	0	2869	4800
Nb Right [3]	231	1600	0	231	1600	0	231	1600	37	268	1600	0	268	1600	0	268	1600
Sb Left	0	0	0	0	0	0	0	0	0	0	0	0	0	0	0	0	0
Sb Thru [3]	1370	4800	158	1528	4800	0	1528	4800	149	1519	4800	158	1677	4800	0	1677	4800
Sb Right [3]	252	1600	0	252	1600	0	252	1600	13	265	1600	0	265	1600	0	265	1600
Eb Left	0	0	0	0	0	0	0	0	0	0	0	0	0	0	0	0	0
Eb Thru	0	0	0	0	0	0	0	0	0	0	0	0	0	0	0	0	0
Eb Right [4]	535	1600	77	612	1600	0	612	1600	29	564	1600	77	641	1600	0	641	1600
Wb Left	0	0	0	0	0	0	0	0	0	0	0	0	0	0	0	0	0
Wb Thru	0	0	0	0	0	0	0	0	0	0	0	0	0	0	0	0	0
Wb Right [4	543	1600	0	543	1600	0	543	1600	26	569	1600	0	569	1600	0	569	1600

Yellow Allowance:
(Existing Unsignalized - Yield Conditions Only)

ICU	N/A	N/A	N/A	N/A	N/A	N/A
LOS	N/A	N/A	N/A	N/A	N/A	N/A

** Key conflicting movement as a part of ICU*
1 Counts conducted by: City Traffic Counters
2 Capacity expressed in veh/hour of green
3 Free-flow movement.
4 Yield movement.

LINSCOTT, LAW & GREENSPAN, ENGINEERS
600 S. Lake Avenue, Suite 500, Pasadena CA 91106
(626) 796.2322 Fax (626) 792-0941

INTERSECTION CAPACITY UTILIZATION

Rosemead Boulevard (SR-164) @ I-10 Fwy EB Ramps
Peak hr: SAT MID-DAY
Annual Growth: 0.82%

Phases I & II

N-S St: Rosemead Boulevard (SR-164)
E-W St: I-10 Fwy EB Ramps
Project: Flair Spectrum Project/1-14-4074-1
File: ICU6

Date: 09/15/2014
Date of Count: 2014
Projection Year: 2019

	2014 EXIST. TRAFFIC		2014 EXISTING WITH PROJECT			2014 EXIST. W/PROJECT + MITIGATION			2019 FUTURE WITHOUT PROJECT			2019 FUTURE WITH PROJECT			2019 FUTURE W/PROJECT + MITIGATION		
	1	2	Added	Total	2	Added	Total	2	Added	Total	2	Added	Total	2	Added	Total	2
Movement	Volume	Capacity	Volume	Volume	Capacity	Volume	Volume	Capacity	Volume	Volume	Capacity	Volume	Volume	Capacity	Volume	Volume	Capacity
Nb Left	0	0	0	0	0	0	0	0	0	0	0	0	0	0	0	0	0
Nb Thru [3]	1679	4800	495	2174	4800	0	2174	4800	116	1795	4800	495	2290	4800	0	2290	4800
Nb Right [3]	340	1600	0	340	1600	0	340	1600	21	361	1600	0	361	1600	0	361	1600
Sb Left	0	0	0	0	0	0	0	0	0	0	0	0	0	0	0	0	0
Sb Thru [3]	1503	4800	252	1755	4800	0	1755	4800	116	1619	4800	252	1871	4800	0	1871	4800
Sb Right [3]	336	1600	0	336	1600	0	336	1600	14	350	1600	0	350	1600	0	350	1600
Eb Left	0	0	0	0	0	0	0	0	0	0	0	0	0	0	0	0	0
Eb Thru	0	0	0	0	0	0	0	0	0	0	0	0	0	0	0	0	0
Eb Right [4]	373	1600	119	492	1600	0	492	1600	22	395	1600	119	514	1600	0	514	1600
Wb Left	0	0	0	0	0	0	0	0	0	0	0	0	0	0	0	0	0
Wb Thru	0	0	0	0	0	0	0	0	0	0	0	0	0	0	0	0	0
Wb Right [4	485	1600	0	485	1600	0	485	1600	23	508	1600	0	508	1600	0	508	1600
Yellow Allowance: (Existing Unsignalized - Yield Conditions Only)																	
ICU	N/A		N/A			N/A			N/A			N/A			N/A		
LOS	N/A		N/A			N/A			N/A			N/A			N/A		

** Key conflicting movement as a part of ICU*
1 Counts conducted by: City Traffic Counters
2 Capacity expressed in veh/hour of green
3 Free-flow movement.
4 Yield movement.

LINSCOTT, LAW & GREENSPAN, ENGINEERS
600 S. Lake Avenue, Suite 500, Pasadena CA 91106
(626) 796.2322 Fax (626) 792-0941

INTERSECTION CAPACITY UTILIZATION

N-S St: Rosemead Boulevard (SR-164)
E-W St: I-10 Fwy EB Ramps
Project: Flair Spectrum Project/1-14-4074-1
File: ICU6

Rosemead Boulevard (SR-164) @ I-10 Fwy EB Ramps
Peak hr: AM
Annual Growth: 0.52%

General Plan Buildout (Phases I & II)

Date: 09/15/2014
Date of Count: 2014
Projection Year: 2035

	2014 EXIST. TRAFFIC		2014 EXISTING WITH PROJECT			2014 EXIST. W/PROJECT + MITIGATION			2035 FUTURE WITHOUT PROJECT			2035 FUTURE WITH PROJECT			2035 FUTURE W/PROJECT + MITIGATION		
	1	2	Added	Total	2	Added	Total	2	Added	Total	2	Added	Total	2	Added	Total	2
Movement	Volume	Capacity	Volume	Volume	Capacity	Volume	Volume	Capacity	Volume	Volume	Capacity	Volume	Volume	Capacity	Volume	Volume	Capacity
Nb Left	0	0	0	0	0	0	0	0	0	0	0	0	0	0	0	0	0
Nb Thru [3]	1553	4800	148	1701	4800	0	1701	4800	254	1807	4800	148	1955	4800	0	1955	4800
Nb Right [3]	238	1600	0	238	1600	0	238	1600	34	272	1600	0	272	1600	0	272	1600
Sb Left	0	0	0	0	0	0	0	0	0	0	0	0	0	0	0	0	0
Sb Thru [3]	1709	4800	79	1788	4800	0	1788	4800	333	2042	4800	79	2121	4800	0	2121	4800
Sb Right [3]	626	1600	0	626	1600	0	626	1600	73	699	1600	0	699	1600	0	699	1600
Eb Left	0	0	0	0	0	0	0	0	0	0	0	0	0	0	0	0	0
Eb Thru	0	0	0	0	0	0	0	0	0	0	0	0	0	0	0	0	0
Eb Right [4]	610	1600	39	649	1600	0	649	1600	86	696	1600	39	735	1600	0	735	1600
Wb Left	0	0	0	0	0	0	0	0	0	0	0	0	0	0	0	0	0
Wb Thru	0	0	0	0	0	0	0	0	0	0	0	0	0	0	0	0	0
Wb Right [4	402	1600	0	402	1600	0	402	1600	63	465	1600	0	465	1600	0	465	1600
Yellow Allowance: (Existing Unsignalized - Yield Conditions Only)																	
ICU	N/A		N/A			N/A			N/A			N/A			N/A		
LOS	N/A		N/A			N/A			N/A			N/A			N/A		

** Key conflicting movement as a part of ICU*
1 Counts conducted by: City Traffic Counters
2 Capacity expressed in veh/hour of green
3 Free-flow movement.
4 Yield movement.

LINSCOTT, LAW & GREENSPAN, ENGINEERS
600 S. Lake Avenue, Suite 500, Pasadena CA 91106
(626) 796.2322 Fax (626) 792-0941

INTERSECTION CAPACITY UTILIZATION

N-S St: Rosemead Boulevard (SR-164)
E-W St: I-10 Fwy EB Ramps
Project: Flair Spectrum Project/1-14-4074-1
File: ICU6

Rosemead Boulevard (SR-164) @ I-10 Fwy EB Ramps
Peak hr: PM
Annual Growth: 0.52%

General Plan Buildout (Phases I & II)

Date: 09/15/2014
Date of Count: 2014
Projection Year: 2035

	2014 EXIST. TRAFFIC		2014 EXISTING WITH PROJECT			2014 EXIST. W/PROJECT + MITIGATION			2035 FUTURE WITHOUT PROJECT			2035 FUTURE WITH PROJECT			2035 FUTURE W/PROJECT + MITIGATION		
	1	2	Added	Total	2	Added	Total	2	Added	Total	2	Added	Total	2	Added	Total	2
Movement	Volume	Capacity	Volume	Volume	Capacity	Volume	Volume	Capacity	Volume	Volume	Capacity	Volume	Volume	Capacity	Volume	Volume	Capacity
Nb Left	0	0	0	0	0	0	0	0	0	0	0	0	0	0	0	0	0
Nb Thru [3]	2366	4800	301	2667	4800	0	2667	4800	375	2741	4800	301	3042	4800	0	3042	4800
Nb Right [3]	231	1600	0	231	1600	0	231	1600	54	285	1600	0	285	1600	0	285	1600
Sb Left	0	0	0	0	0	0	0	0	0	0	0	0	0	0	0	0	0
Sb Thru [3]	1370	4800	158	1528	4800	0	1528	4800	250	1620	4800	158	1778	4800	0	1778	4800
Sb Right [3]	252	1600	0	252	1600	0	252	1600	31	283	1600	0	283	1600	0	283	1600
Eb Left	0	0	0	0	0	0	0	0	0	0	0	0	0	0	0	0	0
Eb Thru	0	0	0	0	0	0	0	0	0	0	0	0	0	0	0	0	0
Eb Right [4]	535	1600	77	612	1600	0	612	1600	69	604	1600	77	681	1600	0	681	1600
Wb Left	0	0	0	0	0	0	0	0	0	0	0	0	0	0	0	0	0
Wb Thru	0	0	0	0	0	0	0	0	0	0	0	0	0	0	0	0	0
Wb Right [4	543	1600	0	543	1600	0	543	1600	65	608	1600	0	608	1600	0	608	1600

Yellow Allowance:
(Existing Unsignalized - Yield Conditions Only)

ICU	N/A	N/A	N/A	N/A	N/A	N/A
LOS	N/A	N/A	N/A	N/A	N/A	N/A

** Key conflicting movement as a part of ICU*
1 Counts conducted by: City Traffic Counters
2 Capacity expressed in veh/hour of green
3 Free-flow movement.
4 Yield movement.

LINSCOTT, LAW & GREENSPAN, ENGINEERS
600 S. Lake Avenue, Suite 500, Pasadena CA 91106
(626) 796.2322 Fax (626) 792-0941

INTERSECTION CAPACITY UTILIZATION

N-S St: Rosemead Boulevard (SR-164)
E-W St: I-10 Fwy EB Ramps
Project: Flair Spectrum Project/1-14-4074-1
File: ICU6

Rosemead Boulevard (SR-164) @ I-10 Fwy EB Ramps
Peak hr: SAT MID-DAY
Annual Growth: 0.52%

General Plan Buildout (Phases I & II)

Date: 09/15/2014
Date of Count: 2014
Projection Year: 2035

	2014 EXIST. TRAFFIC		2014 EXISTING WITH PROJECT			2014 EXIST. W/PROJECT + MITIGATION			2035 FUTURE WITHOUT PROJECT			2035 FUTURE WITH PROJECT			2035 FUTURE W/PROJECT + MITIGATION		
	1	2	Added	Total	2	Added	Total	2	Added	Total	2	Added	Total	2	Added	Total	2
Movement	Volume	Capacity	Volume	Volume	Capacity	Volume	Volume	Capacity	Volume	Volume	Capacity	Volume	Volume	Capacity	Volume	Volume	Capacity
Nb Left	0	0	0	0	0	0	0	0	0	0	0	0	0	0	0	0	0
Nb Thru [3]	1679	4800	495	2174	4800	0	2174	4800	239	1918	4800	495	2413	4800	0	2413	4800
Nb Right [3]	340	1600	0	340	1600	0	340	1600	46	386	1600	0	386	1600	0	386	1600
Sb Left	0	0	0	0	0	0	0	0	0	0	0	0	0	0	0	0	0
Sb Thru [3]	1503	4800	252	1755	4800	0	1755	4800	226	1729	4800	252	1981	4800	0	1981	4800
Sb Right [3]	336	1600	0	336	1600	0	336	1600	39	375	1600	0	375	1600	0	375	1600
Eb Left	0	0	0	0	0	0	0	0	0	0	0	0	0	0	0	0	0
Eb Thru	0	0	0	0	0	0	0	0	0	0	0	0	0	0	0	0	0
Eb Right [4]	373	1600	119	492	1600	0	492	1600	49	422	1600	119	541	1600	0	541	1600
Wb Left	0	0	0	0	0	0	0	0	0	0	0	0	0	0	0	0	0
Wb Thru	0	0	0	0	0	0	0	0	0	0	0	0	0	0	0	0	0
Wb Right [4	485	1600	0	485	1600	0	485	1600	59	544	1600	0	544	1600	0	544	1600
Yellow Allowance: (Existing Unsignalized - Yield Conditions Only)																	
ICU	N/A		N/A			N/A			N/A			N/A			N/A		
LOS	N/A		N/A			N/A			N/A			N/A			N/A		

** Key conflicting movement as a part of ICU*
1 Counts conducted by: City Traffic Counters
2 Capacity expressed in veh/hour of green
3 Free-flow movement.
4 Yield movement.

LINSCOTT, LAW & GREENSPAN, ENGINEERS
600 S. Lake Avenue, Suite 500, Pasadena CA 91106
(626) 796.2322 Fax (626) 792-0941

INTERSECTION CAPACITY UTILIZATION

Rosemead Boulevard (SR-164) @ Telstar Avenue
Peak hr: AM
Annual Growth: 0.82%

Phase I

N-S St: Rosemead Boulevard (SR-164)
E-W St: Telstar Avenue
Project: Flair Spectrum Project/1-14-4074-1
File: ICU7

Date: 09/27/2014
Date of Count: 2014
Projection Year: 2016

	2014 EXIST. TRAFFIC			2014 EXISTING WITH PROJECT				2014 EXIST. W/PROJECT + MITIGATION				2016 FUTURE WITHOUT PROJECT				2016 FUTURE WITH PROJECT				2016 FUTURE W/PROJECT + MITIGATION			
	1	2	V/C	Added	Total	2	V/C	Added	Total	2	V/C	Added	Total	2, 4	V/C	Added	Total	2, 4	V/C	Added	Total	2, 4	V/C
Movement	Volume	Capacity	Ratio	Volume	Volume	Capacity	Ratio	Volume	Volume	Capacity	Ratio	Volume	Volume	Capacity	Ratio	Volume	Volume	Capacity	Ratio	Volume	Volume	Capacity	Ratio
Nb Left	0	0	0.000	0	0	0	0.000	0	0	0	0.000	0	0	0	0.000 *	0	0	0	0.000	0	0	0	0.000
Nb Thru	1596	4800	0.333	0	1596	4800	0.333	0	1596	4800	0.333	95	1691	4800	0.352	0	1691	4800	0.352 *	0	1691	4800	0.352 *
Nb Right	583	1600	0.364 *	35	618	1600	0.386 *	0	618	1600	0.386 *	28	611	1600	0.305	35	646	1600	0.308	0	646	1600	0.308
Sb Left	370	1600	0.231 *	106	476	1600	0.298 *	0	476	1600	0.298 *	52	422	2880	0.147	106	528	2880	0.183 *	0	528	2880	0.183 *
Sb Thru [3]	2245	4800	0.000	0	2245	4800	0.000	0	2245	4800	0.000	160	2405	4800	0.501 *	0	2405	4800	0.501	0	2405	4800	0.501
Sb Right	0	0	-	0	0	0	-	0	0	0	-	0	0	0	-	0	0	0	-	0	0	0	-
Eb Left	0	0	0.000	0	0	0	0.000	0	0	0	0.000	0	0	0	0.000 *	0	0	0	0.000 *	0	0	0	0.000 *
Eb Thru	0	0	0.000	0	0	0	0.000	0	0	0	0.000	0	0	0	0.000	0	0	0	0.000	0	0	0	0.000
Eb Right	0	0	-	0	0	0	-	0	0	0	-	0	0	0	-	0	0	0	-	0	0	0	-
Wb Left	146	1600	0.091	16	162	1600	0.101	0	162	1600	0.101	8	154	0	0.032	16	170	0	0.036	0	170	0	0.036
Wb Thru	0	0	0.000	0	0	0	0.000	0	0	0	0.000	0	0	4800	0.077 *	0	0	4800	0.096 *	0	0	4800	0.096 *
Wb Right	195	3200	0.061	75	270	3200	0.084	0	270	3200	0.084	19	214	0	-	75	289	0	-	0	289	0	-
Yellow Allowance:			0.100 *				0.100 *				0.100 *				0.100 *				0.100 *				0.100 *
ICU			0.787				0.885				0.885				0.678				0.731				0.731
LOS			C				D				D				B				C				C

** Key conflicting movement as a part of ICU*
1 Counts conducted by: City Traffic Counters
2 Capacity expressed in veh/hour of green
3 Free-flow movement under existing conditions.
4 Based on input provided by the City of El Monte, traffic improvement measures will be implemented at this location in the near-term conditions. The resultant lane configurations will be two left-turn lanes and three through lanes on the southbound approach and one left-turn lane, one shared left/right-turn lane, and one right-turn only lane on the westbound approach. In addition, the northbound right-turn movement will have an overlapping phase to be operated concurrently during the westbound phase.

LINSCOTT, LAW & GREENSPAN, ENGINEERS
600 S. Lake Avenue, Suite 500, Pasadena CA 91106
(626) 796.2322 Fax (626) 792-0941

INTERSECTION CAPACITY UTILIZATION

Rosemead Boulevard (SR-164) @ Telstar Avenue
Peak hr: PM
Annual Growth: 0.82%

Phase I

N-S St: Rosemead Boulevard (SR-164)
E-W St: Telstar Avenue
Project: Flair Spectrum Project/1-14-4074-1
File: ICU7

Date: 09/27/2014
Date of Count: 2014
Projection Year: 2016

	2014 EXIST. TRAFFIC			2014 EXISTING WITH PROJECT				2014 EXIST. W/PROJECT + MITIGATION				2016 FUTURE WITHOUT PROJECT				2016 FUTURE WITH PROJECT				2016 FUTURE W/PROJECT + MITIGATION			
	1	2	V/C	Added	Total	2	V/C	Added	Total	2	V/C	Added	Total	2, 4	V/C	Added	Total	2, 4	V/C	Added	Total	2, 4	V/C
Movement	Volume	Capacity	Ratio	Volume	Volume	Capacity	Ratio	Volume	Volume	Capacity	Ratio	Volume	Volume	Capacity	Ratio	Volume	Volume	Capacity	Ratio	Volume	Volume	Capacity	Ratio
Nb Left	0	0	0.000	0	0	0	0.000	0	0	0	0.000	0	0	0	0.000	0	0	0	0.000	0	0	0	0.000
Nb Thru	1783	4800	0.371 *	0	1783	4800	0.371 *	0	1783	4800	0.371 *	143	1926	4800	0.401 *	0	1926	4800	0.401 *	0	1926	4800	0.401 *
Nb Right	137	1600	0.086	63	200	1600	0.125	0	200	1600	0.125	14	151	1600	0.000	63	214	1600	0.000	0	214	1600	0.000
Sb Left	141	1600	0.088 *	183	324	1600	0.203	0	324	1600	0.203	28	169	2880	0.059 *	183	352	2880	0.122 *	0	352	2880	0.122 *
Sb Thru [3]	1755	4800	0.000	0	1755	4800	0.000	0	1755	4800	0.000	105	1860	4800	0.387	0	1860	4800	0.387	0	1860	4800	0.387
Sb Right	0	0	-	0	0	0	-	0	0	0	-	0	0	0	-	0	0	0	-	0	0	0	-
Eb Left	0	0	0.000	0	0	0	0.000 *	0	0	0	0.000 *	0	0	0	0.000 *	0	0	0	0.000 *	0	0	0	0.000 *
Eb Thru	0	0	0.000	0	0	0	0.000	0	0	0	0.000	0	0	0	0.000	0	0	0	0.000	0	0	0	0.000
Eb Right	0	0	-	0	0	0	-	0	0	0	-	0	0	0	-	0	0	0	-	0	0	0	-
Wb Left	407	1600	0.254	61	468	1600	0.293	0	468	1600	0.293	16	423	0	0.088	61	484	0	0.101	0	484	0	0.101
Wb Thru	0	0	0.000	0	0	0	0.000	0	0	0	0.000	0	0	4800	0.265 *	0	0	4800	0.333 *	0	0	4800	0.333 *
Wb Right	814	3200	0.254	267	1081	3200	0.338 *	0	1081	3200	0.338 *	35	849	0	-	267	1116	0	-	0	1116	0	-
Yellow Allowance:			0.100 *				0.100 *				0.100 *				0.100 *				0.100 *				0.100 *
ICU			0.814				1.012				1.012				0.825				0.957				0.957
LOS			D				F				F				D				E				E

** Key conflicting movement as a part of ICU*
1 Counts conducted by: City Traffic Counters
2 Capacity expressed in veh/hour of green
3 Free-flow movement under existing conditions.
4 Based on input provided by the City of El Monte, traffic improvement measures will be implemented at this location in the near-term conditions. The resultant lane configurations will be two left-turn lanes and three through lanes on the southbound approach and one left-turn lane, one shared left/right-turn lane, and one right-turn only lane on the westbound approach. In addition, the northbound right-turn movement will have an overlapping phase to be operated concurrently during the westbound phase.

LINSCOTT, LAW & GREENSPAN, ENGINEERS
600 S. Lake Avenue, Suite 500, Pasadena CA 91106
(626) 796.2322 Fax (626) 792-0941

INTERSECTION CAPACITY UTILIZATION

Rosemead Boulevard (SR-164) @ Telstar Avenue
Peak hr: SAT MID-DAY
Annual Growth: 0.82%

Phase I

N-S St: Rosemead Boulevard (SR-164)
E-W St: Telstar Avenue
Project: Flair Spectrum Project/1-14-4074-1
File: ICU7

Date: 09/27/2014
Date of Count: 2014
Projection Year: 2016

	2014 EXIST. TRAFFIC			2014 EXISTING WITH PROJECT				2014 EXIST. W/PROJECT + MITIGATION				2016 FUTURE WITHOUT PROJECT				2016 FUTURE WITH PROJECT				2016 FUTURE W/PROJECT + MITIGATION			
	1	2	V/C	Added	Total	2	V/C	Added	Total	2	V/C	Added	Total	2, 4	V/C	Added	Total	2, 4	V/C	Added	Total	2, 4	V/C
Movement	Volume	Capacity	Ratio	Volume	Volume	Capacity	Ratio	Volume	Volume	Capacity	Ratio	Volume	Volume	Capacity	Ratio	Volume	Volume	Capacity	Ratio	Volume	Volume	Capacity	Ratio
Nb Left	0	0	0.000	0	0	0	0.000	0	0	0	0.000	0	0	0	0.000	0	0	0	0.000	0	0	0	0.000
Nb Thru	1836	4800	0.383 *	0	1836	4800	0.383 *	0	1836	4800	0.383 *	74	1910	4800	0.398 *	0	1910	4800	0.398 *	0	1910	4800	0.398 *
Nb Right	83	1600	0.052	113	196	1600	0.123	0	196	1600	0.123	7	90	1600	0.000	113	203	1600	0.000	0	203	1600	0.000
Sb Left	117	1600	0.073 *	332	449	1600	0.281 *	0	449	1600	0.281 *	17	134	2880	0.047 *	332	466	2880	0.162 *	0	466	2880	0.162 *
Sb Thru [3]	1767	4800	0.000	0	1767	4800	0.000	0	1767	4800	0.000	75	1842	4800	0.384	0	1842	4800	0.384	0	1842	4800	0.384
Sb Right	0	0	-	0	0	0	-	0	0	0	-	0	0	0	-	0	0	0	-	0	0	0	-
Eb Left	0	0	0.000	0	0	0	0.000	0	0	0	0.000	0	0	0	0.000 *	0	0	0	0.000 *	0	0	0	0.000 *
Eb Thru	0	0	0.000	0	0	0	0.000	0	0	0	0.000	0	0	0	0.000	0	0	0	0.000	0	0	0	0.000
Eb Right	0	0	-	0	0	0	-	0	0	0	-	0	0	0	-	0	0	0	-	0	0	0	-
Wb Left	161	1600	0.101	104	265	1600	0.166	0	265	1600	0.166	8	169	0	0.035	104	273	0	0.057	0	273	0	0.057
Wb Thru	0	0	0.000	0	0	0	0.000	0	0	0	0.000	0	0	4800	0.077 *	0	0	4800	0.192 *	0	0	4800	0.192 *
Wb Right	183	3200	0.057	452	635	3200	0.198	0	635	3200	0.198	16	199	0	-	452	651	0	-	0	651	0	-
Yellow Allowance:			0.100 *				0.100 *				0.100 *				0.100 *				0.100 *				0.100 *
ICU			0.656				0.929				0.929				0.621				0.852				0.852
LOS			B				E				E				B				D				D

** Key conflicting movement as a part of ICU*
1 Counts conducted by: City Traffic Counters
2 Capacity expressed in veh/hour of green
3 Free-flow movement under existing conditions.
4 Based on input provided by the City of El Monte, traffic improvement measures will be implemented at this location in the near-term conditions. The resultant lane configurations will be two left-turn lanes and three through lanes on the southbound approach and one left-turn lane, one shared left/right-turn lane, and one right-turn only lane on the westbound approach. In addition, the northbound right-turn movement will have an overlapping phase to be operated concurrently during the westbound phase.

LINSCOTT, LAW & GREENSPAN, ENGINEERS
600 S. Lake Avenue, Suite 500, Pasadena CA 91106
(626) 796.2322 Fax (626) 792-0941

INTERSECTION CAPACITY UTILIZATION

Rosemead Boulevard (SR-164) @ Telstar Avenue
Peak hr: AM
Annual Growth: 0.82%

Phases I & II

N-S St: Rosemead Boulevard (SR-164)
E-W St: Telstar Avenue
Project: Flair Spectrum Project/1-14-4074-1
File: ICU7

Date: 09/27/2014
Date of Count: 2014
Projection Year: 2019

	2014 EXIST. TRAFFIC			2014 EXISTING WITH PROJECT				2014 EXIST. W/PROJECT + MITIGATION				2019 FUTURE WITHOUT PROJECT				2019 FUTURE WITH PROJECT				2019 FUTURE W/PROJECT + MITIGATION			
	1	2	V/C	Added	Total	2	V/C	Added	Total	2	V/C	Added	Total	2, 4	V/C	Added	Total	2, 4	V/C	Added	Total	2, 4	V/C
Movement	Volume	Capacity	Ratio	Volume	Volume	Capacity	Ratio	Volume	Volume	Capacity	Ratio	Volume	Volume	Capacity	Ratio	Volume	Volume	Capacity	Ratio	Volume	Volume	Capacity	Ratio
Nb Left	0	0	0.000	0	0	0	0.000	0	0	0	0.000	0	0	0	0.000 *	0	0	0	0.000	0	0	0	0.000
Nb Thru	1596	4800	0.333	0	1596	4800	0.333	0	1596	4800	0.333	136	1732	4800	0.361	0	1732	4800	0.361 *	0	1732	4800	0.361 *
Nb Right	583	1600	0.364 *	41	624	1600	0.390 *	0	624	1600	0.390 *	42	625	1600	0.312	41	666	1600	0.298	0	666	1600	0.298
Sb Left	370	1600	0.231 *	117	487	1600	0.304 *	0	487	1600	0.304 *	61	431	2880	0.150	117	548	2880	0.190 *	0	548	2880	0.190 *
Sb Thru [3]	2245	4800	0.000	0	2245	4800	0.000	0	2245	4800	0.000	217	2462	4800	0.513 *	0	2462	4800	0.513	0	2462	4800	0.513
Sb Right	0	0	-	0	0	0	-	0	0	0	-	0	0	0	-	0	0	0	-	0	0	0	-
Eb Left	0	0	0.000	0	0	0	0.000	0	0	0	0.000	0	0	0	0.000 *	0	0	0	0.000 *	0	0	0	0.000 *
Eb Thru	0	0	0.000	0	0	0	0.000	0	0	0	0.000	0	0	0	0.000	0	0	0	0.000	0	0	0	0.000
Eb Right	0	0	-	0	0	0	-	0	0	0	-	0	0	0	-	0	0	0	-	0	0	0	-
Wb Left	146	1600	0.091	44	190	1600	0.119	0	190	1600	0.119	12	158	0	0.033	44	202	0	0.042	0	202	0	0.042
Wb Thru	0	0	0.000	0	0	0	0.000	0	0	0	0.000	0	0	4800	0.079 *	0	0	4800	0.119 *	0	0	4800	0.119 *
Wb Right	195	3200	0.061	148	343	3200	0.107	0	343	3200	0.107	24	219	0	-	148	367	0	-	0	367	0	-
Yellow Allowance:			0.100 *				0.100 *				0.100 *				0.100 *				0.100 *				0.100 *
ICU			0.787				0.913				0.913				0.691				0.770				0.720
LOS			C				E				E				B				C				C

** Key conflicting movement as a part of ICU*
1 Counts conducted by: City Traffic Counters
2 Capacity expressed in veh/hour of green
3 Free-flow movement under existing conditions.
4 Based on input provided by the City of El Monte, traffic improvement measures will be implemented at this location in the near-term conditions. The resultant lane configurations will be two left-turn lanes and three through lanes on the southbound approach and one left-turn lane, one shared left/right-turn lane, and one right-turn only lane on the westbound approach. In addition, the northbound right-turn movement will have an overlapping phase to be operated concurrently during the westbound phase.

LINSCOTT, LAW & GREENSPAN, ENGINEERS
600 S. Lake Avenue, Suite 500, Pasadena CA 91106
(626) 796.2322 Fax (626) 792-0941

INTERSECTION CAPACITY UTILIZATION

Rosemead Boulevard (SR-164) @ Telstar Avenue
Peak hr: PM
Annual Growth: 0.82%

Phases I & II

N-S St: Rosemead Boulevard (SR-164)
E-W St: Telstar Avenue
Project: Flair Spectrum Project/1-14-4074-1
File: ICU7

Date: 09/27/2014
Date of Count: 2014
Projection Year: 2019

	2014 EXIST. TRAFFIC			2014 EXISTING WITH PROJECT				2014 EXIST. W/PROJECT + MITIGATION				2019 FUTURE WITHOUT PROJECT				2019 FUTURE WITH PROJECT				2019 FUTURE W/PROJECT + MITIGATION			
	1	2	V/C	Added	Total	2	V/C	Added	Total	2	V/C	Added	Total	2, 4	V/C	Added	Total	2, 4	V/C	Added	Total	2, 4	V/C
Movement	Volume	Capacity	Ratio	Volume	Volume	Capacity	Ratio	Volume	Volume	Capacity	Ratio	Volume	Volume	Capacity	Ratio	Volume	Volume	Capacity	Ratio	Volume	Volume	Capacity	Ratio
Nb Left	0	0	0.000	0	0	0	0.000	0	0	0	0.000	0	0	0	0.000	0	0	0	0.000	0	0	0	0.000
Nb Thru	1783	4800	0.371 *	0	1783	4800	0.371 *	0	1783	4800	0.371 *	188	1971	4800	0.411 *	0	1971	4800	0.411 *	0	1971	4800	0.411 *
Nb Right	137	1600	0.086	90	227	1600	0.142	0	227	1600	0.142	18	155	1600	0.000	90	245	1600	0.000	0	245	1600	0.000
Sb Left	141	1600	0.088 *	235	376	1600	0.235	0	376	1600	0.235	32	173	2880	0.060 *	235	408	2880	0.142 *	0	408	2880	0.142 *
Sb Thru [3]	1755	4800	0.000	0	1755	4800	0.000	0	1755	4800	0.000	149	1904	4800	0.397	0	1904	4800	0.397	0	1904	4800	0.397
Sb Right	0	0	-	0	0	0	-	0	0	0	-	0	0	0	-	0	0	0	-	0	0	0	-
Eb Left	0	0	0.000	0	0	0	0.000 *	0	0	0	0.000 *	0	0	0	0.000 *	0	0	0	0.000 *	0	0	0	0.000 *
Eb Thru	0	0	0.000	0	0	0	0.000	0	0	0	0.000	0	0	0	0.000	0	0	0	0.000	0	0	0	0.000
Eb Right	0	0	-	0	0	0	-	0	0	0	-	0	0	0	-	0	0	0	-	0	0	0	-
Wb Left	407	1600	0.254	74	481	1600	0.301	0	481	1600	0.301	26	433	0	0.090	74	507	0	0.106	0	507	0	0.106
Wb Thru	0	0	0.000	0	0	0	0.000	0	0	0	0.000	0	0	4800	0.271 *	0	0	4800	0.350 *	0	0	4800	0.350 *
Wb Right	814	3200	0.254	301	1115	3200	0.348 *	0	1115	3200	0.348 *	56	870	0	-	301	1171	0	-	0	1171	0	-
Yellow Allowance:			0.100 *				0.100 *				0.100 *				0.100 *				0.100 *				0.100 *
ICU			0.814				1.055				1.055				0.842				1.002				0.952
LOS			D				F				F				D				F				E

** Key conflicting movement as a part of ICU*
1 Counts conducted by: City Traffic Counters
2 Capacity expressed in veh/hour of green
3 Free-flow movement under existing conditions.
4 Based on input provided by the City of El Monte, traffic improvement measures will be implemented at this location in the near-term conditions. The resultant lane configurations will be two left-turn lanes and three through lanes on the southbound approach and one left-turn lane, one shared left/right-turn lane, and one right-turn only lane on the westbound approach. In addition, the northbound right-turn movement will have an overlapping phase to be operated concurrently during the westbound phase.

LINSCOTT, LAW & GREENSPAN, ENGINEERS
600 S. Lake Avenue, Suite 500, Pasadena CA 91106
(626) 796.2322 Fax (626) 792-0941

INTERSECTION CAPACITY UTILIZATION

Rosemead Boulevard (SR-164) @ Telstar Avenue
Peak hr: SAT MID-DAY
Annual Growth: 0.82%

Phases I & II

N-S St: Rosemead Boulevard (SR-164)
E-W St: Telstar Avenue
Project: Flair Spectrum Project/1-14-4074-1
File: ICU7

Date: 09/27/2014
Date of Count: 2014
Projection Year: 2019

	2014 EXIST. TRAFFIC			2014 EXISTING WITH PROJECT				2014 EXIST. W/PROJECT + MITIGATION				2019 FUTURE WITHOUT PROJECT				2019 FUTURE WITH PROJECT				2019 FUTURE W/PROJECT + MITIGATION			
	1	2	V/C	Added	Total	2	V/C	Added	Total	2	V/C	Added	Total	2, 4	V/C	Added	Total	2, 4	V/C	Added	Total	2, 4	V/C
Movement	Volume	Capacity	Ratio	Volume	Volume	Capacity	Ratio	Volume	Volume	Capacity	Ratio	Volume	Volume	Capacity	Ratio	Volume	Volume	Capacity	Ratio	Volume	Volume	Capacity	Ratio
Nb Left	0	0	0.000	0	0	0	0.000	0	0	0	0.000	0	0	0	0.000	0	0	0	0.000	0	0	0	0.000
Nb Thru	1836	4800	0.383 *	0	1836	4800	0.383 *	0	1836	4800	0.383 *	121	1957	4800	0.408 *	0	1957	4800	0.408 *	0	1957	4800	0.408 *
Nb Right	83	1600	0.052	132	215	1600	0.134	0	215	1600	0.134	9	92	1600	0.000	132	224	1600	0.000	0	224	1600	0.000
Sb Left	117	1600	0.073 *	369	486	1600	0.304 *	0	486	1600	0.304 *	20	137	2880	0.048 *	369	506	2880	0.176 *	0	506	2880	0.176 *
Sb Thru [3]	1767	4800	0.000	0	1767	4800	0.000	0	1767	4800	0.000	120	1887	4800	0.393	0	1887	4800	0.393	0	1887	4800	0.393
Sb Right	0	0	-	0	0	0	-	0	0	0	-	0	0	0	-	0	0	0	-	0	0	0	-
Eb Left	0	0	0.000	0	0	0	0.000	0	0	0	0.000	0	0	0	0.000 *	0	0	0	0.000 *	0	0	0	0.000 *
Eb Thru	0	0	0.000	0	0	0	0.000	0	0	0	0.000	0	0	0	0.000	0	0	0	0.000	0	0	0	0.000
Eb Right	0	0	-	0	0	0	-	0	0	0	-	0	0	0	-	0	0	0	-	0	0	0	-
Wb Left	161	1600	0.101	121	282	1600	0.176	0	282	1600	0.176	12	173	0	0.036	121	294	0	0.061	0	294	0	0.061
Wb Thru	0	0	0.000	0	0	0	0.000	0	0	0	0.000	0	0	4800	0.078 *	0	0	4800	0.207 *	0	0	4800	0.207 *
Wb Right	183	3200	0.057	495	678	3200	0.212	0	678	3200	0.212	21	204	0	-	495	699	0	-	0	699	0	-
Yellow Allowance:			0.100 *				0.100 *				0.100 *				0.100 *				0.100 *				0.100 *
ICU			0.656				0.963				0.963				0.634				0.890				0.840
LOS			B				E				E				B				D				D

** Key conflicting movement as a part of ICU*
1 Counts conducted by: City Traffic Counters
2 Capacity expressed in veh/hour of green
3 Free-flow movement under existing conditions.
4 Based on input provided by the City of El Monte, traffic improvement measures will be implemented at this location in the near-term conditions. The resultant lane configurations will be two left-turn lanes and three through lanes on the southbound approach and one left-turn lane, one shared left/right-turn lane, and one right-turn only lane on the westbound approach. In addition, the northbound right-turn movement will have an overlapping phase to be operated concurrently during the westbound phase.

LINSCOTT, LAW & GREENSPAN, ENGINEERS
600 S. Lake Avenue, Suite 500, Pasadena CA 91106
(626) 796.2322 Fax (626) 792-0941

INTERSECTION CAPACITY UTILIZATION

Rosemead Boulevard (SR-164) @ Telstar Avenue
Peak hr: AM
Annual Growth: 0.52%

General Plan Buildout (Phases I & II)

N-S St: Rosemead Boulevard (SR-164)
E-W St: Telstar Avenue
Project: Flair Spectrum Project/1-14-4074-1
File: ICU7

Date: 09/27/2014
Date of Count: 2014
Projection Year: 2035

	2014 EXIST. TRAFFIC			2014 EXISTING WITH PROJECT				2014 EXIST. W/PROJECT + MITIGATION				2035 FUTURE WITHOUT PROJECT				2035 FUTURE WITH PROJECT				2035 FUTURE W/PROJECT + MITIGATION			
	1	2	V/C	Added	Total	2	V/C	Added	Total	2	V/C	Added	Total	2, 4	V/C	Added	Total	2, 4	V/C	Added	Total	2, 4	V/C
Movement	Volume	Capacity	Ratio	Volume	Volume	Capacity	Ratio	Volume	Volume	Capacity	Ratio	Volume	Volume	Capacity	Ratio	Volume	Volume	Capacity	Ratio	Volume	Volume	Capacity	Ratio
Nb Left	0	0	0.000	0	0	0	0.000	0	0	0	0.000	0	0	0	0.000 *	0	0	0	0.000	0	0	0	0.000 *
Nb Thru	1596	4800	0.333	0	1596	4800	0.333	0	1596	4800	0.333	253	1849	4800	0.385	0	1849	4800	0.385 *	0	1849	6400	0.289
Nb Right	583	1600	0.364 *	41	624	1600	0.390 *	0	624	1600	0.390 *	85	668	1600	0.334	41	709	1600	0.319	0	709	1600	0.319
Sb Left	370	1600	0.231 *	117	487	1600	0.304 *	0	487	1600	0.304 *	89	459	2880	0.159	117	576	2880	0.200 *	0	576	2880	0.200
Sb Thru [3]	2245	4800	0.000	0	2245	4800	0.000	0	2245	4800	0.000	381	2626	4800	0.547 *	0	2626	4800	0.547	0	2626	4800	0.547 *
Sb Right	0	0	-	0	0	0	-	0	0	0	-	0	0	0	-	0	0	0	-	0	0	0	-
Eb Left	0	0	0.000	0	0	0	0.000	0	0	0	0.000	0	0	0	0.000 *	0	0	0	0.000 *	0	0	0	0.000 *
Eb Thru	0	0	0.000	0	0	0	0.000	0	0	0	0.000	0	0	0	0.000	0	0	0	0.000	0	0	0	0.000
Eb Right	0	0	-	0	0	0	-	0	0	0	-	0	0	0	-	0	0	0	-	0	0	0	-
Wb Left	146	1600	0.091	44	190	1600	0.119	0	190	1600	0.119	23	169	0	0.035	44	213	0	0.044	0	213	0	0.044
Wb Thru	0	0	0.000	0	0	0	0.000	0	0	0	0.000	0	0	4800	0.084 *	0	0	4800	0.124 *	0	0	4800	0.124 *
Wb Right	195	3200	0.061	148	343	3200	0.107	0	343	3200	0.107	38	233	0	-	148	381	0	-	0	381	0	-
Yellow Allowance:			0.100 *				0.100 *				0.100 *				0.100 *				0.100 *				0.100 *
ICU			0.787				0.913				0.913				0.731				0.809				0.721
LOS			C				E				E				C				D				C

** Key conflicting movement as a part of ICU*
1 Counts conducted by: City Traffic Counters
2 Capacity expressed in veh/hour of green
3 Free-flow movement under existing conditions.
4 Based on input provided by the City of El Monte, traffic improvement measures will be implemented at this location in the near-term conditions. The resultant lane configurations will be two left-turn lanes and three through lanes on the southbound approach and one left-turn lane, one shared left/right-turn lane, and one right-turn only lane on the westbound approach. In addition, the northbound right-turn movement will have an overlapping phase to be operated concurrently during the westbound phase.

LINSCOTT, LAW & GREENSPAN, ENGINEERS
600 S. Lake Avenue, Suite 500, Pasadena CA 91106
(626) 796.2322 Fax (626) 792-0941

INTERSECTION CAPACITY UTILIZATION

Rosemead Boulevard (SR-164) @ Telstar Avenue
Peak hr: PM
Annual Growth: 0.52%

General Plan Buildout (Phases I & II)

N-S St: Rosemead Boulevard (SR-164)
E-W St: Telstar Avenue
Project: Flair Spectrum Project/1-14-4074-1
File: ICU7

Date: 09/27/2014
Date of Count: 2014
Projection Year: 2035

	2014 EXIST. TRAFFIC			2014 EXISTING WITH PROJECT				2014 EXIST. W/PROJECT + MITIGATION				2035 FUTURE WITHOUT PROJECT				2035 FUTURE WITH PROJECT				2035 FUTURE W/PROJECT + MITIGATION			
	1	2	V/C	Added	Total	2	V/C	Added	Total	2	V/C	Added	Total	2, 4	V/C	Added	Total	2, 4	V/C	Added	Total	2, 4	V/C
Movement	Volume	Capacity	Ratio	Volume	Volume	Capacity	Ratio	Volume	Volume	Capacity	Ratio	Volume	Volume	Capacity	Ratio	Volume	Volume	Capacity	Ratio	Volume	Volume	Capacity	Ratio
Nb Left	0	0	0.000	0	0	0	0.000	0	0	0	0.000	0	0	0	0.000	0	0	0	0.000	0	0	0	0.000
Nb Thru	1783	4800	0.371 *	0	1783	4800	0.371 *	0	1783	4800	0.371 *	319	2102	4800	0.438 *	0	2102	4800	0.438 *	0	2102	6400	0.328 *
Nb Right	137	1600	0.086	90	227	1600	0.142	0	227	1600	0.142	28	165	1600	0.000	90	255	1600	0.000	0	255	1600	0.000
Sb Left	141	1600	0.088 *	235	376	1600	0.235	0	376	1600	0.235	42	183	2880	0.064 *	235	418	2880	0.145 *	0	418	2880	0.145 *
Sb Thru [3]	1755	4800	0.000	0	1755	4800	0.000	0	1755	4800	0.000	278	2033	4800	0.424	0	2033	4800	0.424	0	2033	4800	0.424
Sb Right	0	0	-	0	0	0	-	0	0	0	-	0	0	0	-	0	0	0	-	0	0	0	-
Eb Left	0	0	0.000	0	0	0	0.000 *	0	0	0	0.000 *	0	0	0	0.000 *	0	0	0	0.000 *	0	0	0	0.000 *
Eb Thru	0	0	0.000	0	0	0	0.000	0	0	0	0.000	0	0	0	0.000	0	0	0	0.000	0	0	0	0.000
Eb Right	0	0	-	0	0	0	-	0	0	0	-	0	0	0	-	0	0	0	-	0	0	0	-
Wb Left	407	1600	0.254	74	481	1600	0.301	0	481	1600	0.301	56	463	0	0.096	74	537	0	0.112	0	537	0	0.112
Wb Thru	0	0	0.000	0	0	0	0.000	0	0	0	0.000	0	0	4800	0.290 *	0	0	4800	0.368 *	0	0	4800	0.368 *
Wb Right	814	3200	0.254	301	1115	3200	0.348 *	0	1115	3200	0.348 *	116	930	0	-	301	1231	0	-	0	1231	0	-
Yellow Allowance:			0.100 *				0.100 *				0.100 *				0.100 *				0.100 *				0.100 *
ICU			0.814				1.055				1.055				0.892				1.051				0.892
LOS			D				F				F				D				F				D

** Key conflicting movement as a part of ICU*
1 Counts conducted by: City Traffic Counters
2 Capacity expressed in veh/hour of green
3 Free-flow movement under existing conditions.
4 Based on input provided by the City of El Monte, traffic improvement measures will be implemented at this location in the near-term conditions. The resultant lane configurations will be two left-turn lanes and three through lanes on the southbound approach and one left-turn lane, one shared left/right-turn lane, and one right-turn only lane on the westbound approach. In addition, the northbound right-turn movement will have an overlapping phase to be operated concurrently during the westbound phase.

LINSCOTT, LAW & GREENSPAN, ENGINEERS
600 S. Lake Avenue, Suite 500, Pasadena CA 91106
(626) 796.2322 Fax (626) 792-0941

INTERSECTION CAPACITY UTILIZATION

N-S St: Rosemead Boulevard (SR-164)
E-W St: Telstar Avenue
Project: Flair Spectrum Project/1-14-4074-1
File: ICU7

Rosemead Boulevard (SR-164) @ Telstar Avenue
Peak hr: SAT MID-DAY
Annual Growth: 0.52%

General Plan Buildout (Phases I & II)

Date: 09/27/2014
Date of Count: 2014
Projection Year: 2035

	2014 EXIST. TRAFFIC			2014 EXISTING WITH PROJECT				2014 EXIST. W/PROJECT + MITIGATION				2035 FUTURE WITHOUT PROJECT				2035 FUTURE WITH PROJECT				2035 FUTURE W/PROJECT + MITIGATION			
	1	2	V/C	Added	Total	2	V/C	Added	Total	2	V/C	Added	Total	2, 4	V/C	Added	Total	2, 4	V/C	Added	Total	2, 4	V/C
Movement	Volume	Capacity	Ratio	Volume	Volume	Capacity	Ratio	Volume	Volume	Capacity	Ratio	Volume	Volume	Capacity	Ratio	Volume	Volume	Capacity	Ratio	Volume	Volume	Capacity	Ratio
Nb Left	0	0	0.000	0	0	0	0.000	0	0	0	0.000	0	0	0	0.000	0	0	0	0.000	0	0	0	0.000
Nb Thru	1836	4800	0.383 *	0	1836	4800	0.383 *	0	1836	4800	0.383 *	255	2091	4800	0.436 *	0	2091	4800	0.436 *	0	2091	6400	0.327 *
Nb Right	83	1600	0.052	132	215	1600	0.134	0	215	1600	0.134	16	99	1600	0.000	132	231	1600	0.000	0	231	1600	0.000
Sb Left	117	1600	0.073 *	369	486	1600	0.304 *	0	486	1600	0.304 *	28	145	2880	0.051 *	369	514	2880	0.179 *	0	514	2880	0.179 *
Sb Thru [3]	1767	4800	0.000	0	1767	4800	0.000	0	1767	4800	0.000	249	2016	4800	0.420	0	2016	4800	0.420	0	2016	4800	0.420
Sb Right	0	0	-	0	0	0	-	0	0	0	-	0	0	0	-	0	0	0	-	0	0	0	-
Eb Left	0	0	0.000	0	0	0	0.000	0	0	0	0.000	0	0	0	0.000 *	0	0	0	0.000 *	0	0	0	0.000 *
Eb Thru	0	0	0.000	0	0	0	0.000	0	0	0	0.000	0	0	0	0.000	0	0	0	0.000	0	0	0	0.000
Eb Right	0	0	-	0	0	0	-	0	0	0	-	0	0	0	-	0	0	0	-	0	0	0	-
Wb Left	161	1600	0.101	121	282	1600	0.176	0	282	1600	0.176	24	185	0	0.038	121	306	0	0.064	0	306	0	0.064
Wb Thru	0	0	0.000	0	0	0	0.000	0	0	0	0.000	0	0	4800	0.084 *	0	0	4800	0.212 *	0	0	4800	0.212 *
Wb Right	183	3200	0.057	495	678	3200	0.212	0	678	3200	0.212	34	217	0	-	495	712	0	-	0	712	0	-
Yellow Allowance:			0.100 *				0.100 *				0.100 *				0.100 *				0.100 *				0.100 *
ICU			0.656				0.963				0.963				0.670				0.926				0.767
LOS			B				E				E				B				E				C

** Key conflicting movement as a part of ICU*
1 Counts conducted by: City Traffic Counters
2 Capacity expressed in veh/hour of green
3 Free-flow movement under existing conditions.
4 Based on input provided by the City of El Monte, traffic improvement measures will be implemented at this location in the near-term conditions. The resultant lane configurations will be two left-turn lanes and three through lanes on the southbound approach and one left-turn lane, one shared left/right-turn lane, and one right-turn only lane on the westbound approach. In addition, the northbound right-turn movement will have an overlapping phase to be operated concurrently during the westbound phase.

LINSCOTT, LAW & GREENSPAN, ENGINEERS
600 S. Lake Avenue, Suite 500, Pasadena CA 91106
(626) 796.2322 Fax (626) 792-0941

INTERSECTION CAPACITY UTILIZATION

N-S St: Rosemead Boulevard (SR-164)
E-W St: Whitmore Street
Project: Flair Spectrum Project/1-14-4074-1
File: ICU8

Rosemead Boulevard (SR-164) @ Whitmore Street
Peak hr: AM
Annual Growth: 0.82%

Phase I

Date: 09/15/2014
Date of Count: 2014
Projection Year: 2016

	2014 EXIST. TRAFFIC			2014 EXISTING WITH PROJECT				2014 EXIST. W/PROJECT + MITIGATION				2016 FUTURE WITHOUT PROJECT				2016 FUTURE WITH PROJECT				2016 FUTURE W/PROJECT + MITIGATION			
	1	2	V/C	Added	Total	2	V/C	Added	Total	2	V/C	Added	Total	2	V/C	Added	Total	2	V/C	Added	Total	2	V/C
Movement	Volume	Capacity	Ratio	Volume	Volume	Capacity	Ratio	Volume	Volume	Capacity	Ratio	Volume	Volume	Capacity	Ratio	Volume	Volume	Capacity	Ratio	Volume	Volume	Capacity	Ratio
Nb Left	0	0	0.000	0	0	0	0.000	0	0	0	0.000	0	0	0	0.000	0	0	0	0.000	0	0	0	0.000
Nb Thru	1947	4800	0.406 *	35	1982	4800	0.413 *	0	1982	4800	0.413 *	112	2059	4800	0.429 *	35	2094	4800	0.436 *	0	2094	4800	0.436 *
Nb Right	242	1600	0.151	0	242	1600	0.151	0	242	1600	0.151	44	286	1600	0.179	0	286	1600	0.179	0	286	1600	0.179
Sb Left	92	1600	0.058 *	0	92	1600	0.058 *	0	92	1600	0.058 *	52	144	1600	0.090 *	0	144	1600	0.090 *	0	144	1600	0.090 *
Sb Thru	2036	4800	0.424	16	2052	4800	0.428	0	2052	4800	0.428	113	2149	4800	0.448	16	2165	4800	0.451	0	2165	4800	0.451
Sb Right	0	0	-	0	0	0	-	0	0	0	-	0	0	0	-	0	0	0	-	0	0	0	-
Eb Left	0	0	0.000 *	0	0	0	0.000 *	0	0	0	0.000 *	0	0	0	0.000 *	0	0	0	0.000 *	0	0	0	0.000 *
Eb Thru	0	0	0.000	0	0	0	0.000	0	0	0	0.000	0	0	0	0.000	0	0	0	0.000	0	0	0	0.000
Eb Right	0	0	-	0	0	0	-	0	0	0	-	0	0	0	-	0	0	0	-	0	0	0	-
Wb Left	35	0	0.022	0	35	0	0.022	0	35	0	0.022	6	41	0	0.025	0	41	0	0.025	0	41	0	0.025
Wb Thru	0	1600	0.031 *	0	0	1600	0.031 *	0	0	1600	0.031 *	0	0	1600	0.039 *	0	0	1600	0.039 *	0	0	1600	0.039 *
Wb Right	14	0	-	0	14	0	-	0	14	0	-	8	22	0	-	0	22	0	-	0	22	0	-
Yellow Allowance:			0.100 *				0.100 *				0.100 *				0.100 *				0.100 *				0.100 *
ICU			0.594				0.601				0.601				0.658				0.665				0.665
LOS			A				B				B				B				B				B

** Key conflicting movement as a part of ICU*
1 Counts conducted by: City Traffic Counters
2 Capacity expressed in veh/hour of green

LINSCOTT, LAW & GREENSPAN, ENGINEERS
600 S. Lake Avenue, Suite 500, Pasadena CA 91106
(626) 796.2322 Fax (626) 792-0941

INTERSECTION CAPACITY UTILIZATION

Rosemead Boulevard (SR-164) @ Whitmore Street
Peak hr: PM
Annual Growth: 0.82%

Phase I

N-S St: Rosemead Boulevard (SR-164)
E-W St: Whitmore Street
Project: Flair Spectrum Project/1-14-4074-1
File: ICU8

Date: 09/15/2014
Date of Count: 2014
Projection Year: 2016

	2014 EXIST. TRAFFIC			2014 EXISTING WITH PROJECT				2014 EXIST. W/PROJECT + MITIGATION				2016 FUTURE WITHOUT PROJECT				2016 FUTURE WITH PROJECT				2016 FUTURE W/PROJECT + MITIGATION			
	1	2	V/C	Added	Total	2	V/C	Added	Total	2	V/C	Added	Total	2	V/C	Added	Total	2	V/C	Added	Total	2	V/C
Movement	Volume	Capacity	Ratio	Volume	Volume	Capacity	Ratio	Volume	Volume	Capacity	Ratio	Volume	Volume	Capacity	Ratio	Volume	Volume	Capacity	Ratio	Volume	Volume	Capacity	Ratio
Nb Left	0	0	0.000 *	0	0	0	0.000 *	0	0	0	0.000 *	0	0	0	0.000 *	0	0	0	0.000 *	0	0	0	0.000 *
Nb Thru	1826	4800	0.380	63	1889	4800	0.394	0	1889	4800	0.394	112	1938	4800	0.404	63	2001	4800	0.417	0	2001	4800	0.417
Nb Right	41	1600	0.026	0	41	1600	0.026	0	41	1600	0.026	8	49	1600	0.030	0	49	1600	0.030	0	49	1600	0.030
Sb Left	5	1600	0.003	0	5	1600	0.003	0	5	1600	0.003	9	14	1600	0.009	0	14	1600	0.009	0	14	1600	0.009
Sb Thru	2163	4800	0.451 *	61	2224	4800	0.463 *	0	2224	4800	0.463 *	112	2275	4800	0.474 *	61	2336	4800	0.487 *	0	2336	4800	0.487 *
Sb Right	0	0	-	0	0	0	-	0	0	0	-	0	0	0	-	0	0	0	-	0	0	0	-
Eb Left	0	0	0.000 *	0	0	0	0.000 *	0	0	0	0.000 *	0	0	0	0.000 *	0	0	0	0.000 *	0	0	0	0.000 *
Eb Thru	0	0	0.000	0	0	0	0.000	0	0	0	0.000	0	0	0	0.000	0	0	0	0.000	0	0	0	0.000
Eb Right	0	0	-	0	0	0	-	0	0	0	-	0	0	0	-	0	0	0	-	0	0	0	-
Wb Left	260	0	0.163	0	260	0	0.163	0	260	0	0.163	40	300	0	0.188	0	300	0	0.188	0	300	0	0.188
Wb Thru	0	1600	0.201 *	0	0	1600	0.201 *	0	0	1600	0.201 *	0	0	1600	0.260 *	0	0	1600	0.260 *	0	0	1600	0.260 *
Wb Right	62	0	-	0	62	0	-	0	62	0	-	54	116	0	-	0	116	0	-	0	116	0	-
Yellow Allowance:			0.100 *				0.100 *				0.100 *				0.100 *				0.100 *				0.100 *
ICU			0.752				0.765				0.765				0.834				0.847				0.847
LOS			C				C				C				D				D				D

** Key conflicting movement as a part of ICU*
1 Counts conducted by: City Traffic Counters
2 Capacity expressed in veh/hour of green

LINSCOTT, LAW & GREENSPAN, ENGINEERS
600 S. Lake Avenue, Suite 500, Pasadena CA 91106
(626) 796.2322 Fax (626) 792-0941

INTERSECTION CAPACITY UTILIZATION

Rosemead Boulevard (SR-164) @ Whitmore Street
Peak hr: SAT MID-DAY
Annual Growth: 0.82%

Phase I

N-S St: Rosemead Boulevard (SR-164)
E-W St: Whitmore Street
Project: Flair Spectrum Project/1-14-4074-1
File: ICU8

Date: 09/15/2014
Date of Count: 2014
Projection Year: 2016

	2014 EXIST. TRAFFIC			2014 EXISTING WITH PROJECT				2014 EXIST. W/PROJECT + MITIGATION				2016 FUTURE WITHOUT PROJECT				2016 FUTURE WITH PROJECT				2016 FUTURE W/PROJECT + MITIGATION			
	1	2	V/C	Added	Total	2	V/C	Added	Total	2	V/C	Added	Total	2	V/C	Added	Total	2	V/C	Added	Total	2	V/C
Movement	Volume	Capacity	Ratio	Volume	Volume	Capacity	Ratio	Volume	Volume	Capacity	Ratio	Volume	Volume	Capacity	Ratio	Volume	Volume	Capacity	Ratio	Volume	Volume	Capacity	Ratio
Nb Left	0	0	0.000	0	0	0	0.000	0	0	0	0.000	0	0	0	0.000	0	0	0	0.000	0	0	0	0.000
Nb Thru	1944	4800	0.405 *	113	2057	4800	0.429 *	0	2057	4800	0.429 *	75	2019	4800	0.421 *	113	2132	4800	0.444 *	0	2132	4800	0.444 *
Nb Right	22	1600	0.014	0	22	1600	0.014	0	22	1600	0.014	7	29	1600	0.018	0	29	1600	0.018	0	29	1600	0.018
Sb Left	24	1600	0.015 *	0	24	1600	0.015 *	0	24	1600	0.015 *	8	32	1600	0.020 *	0	32	1600	0.020 *	0	32	1600	0.020 *
Sb Thru	1899	4800	0.396	104	2003	4800	0.417	0	2003	4800	0.417	74	1973	4800	0.411	104	2077	4800	0.433	0	2077	4800	0.433
Sb Right	0	0	-	0	0	0	-	0	0	0	-	0	0	0	-	0	0	0	-	0	0	0	-
Eb Left	0	0	0.000 *	0	0	0	0.000 *	0	0	0	0.000 *	0	0	0	0.000 *	0	0	0	0.000 *	0	0	0	0.000 *
Eb Thru	0	0	0.000	0	0	0	0.000	0	0	0	0.000	0	0	0	0.000	0	0	0	0.000	0	0	0	0.000
Eb Right	0	0	-	0	0	0	-	0	0	0	-	0	0	0	-	0	0	0	-	0	0	0	-
Wb Left	19	0	0.012	0	19	0	0.012	0	19	0	0.012	6	25	0	0.016	0	25	0	0.016	0	25	0	0.016
Wb Thru	0	1600	0.024 *	0	0	1600	0.024 *	0	0	1600	0.024 *	0	0	1600	0.034 *	0	0	1600	0.034 *	0	0	1600	0.034 *
Wb Right	20	0	-	0	20	0	-	0	20	0	-	8	28	0	-	0	28	0	-	0	28	0	-
Yellow Allowance:			0.100 *				0.100 *				0.100 *				0.100 *				0.100 *				0.100 *
ICU			0.544				0.568				0.568				0.574				0.598				0.598
LOS			A				A				A				A				A				A

** Key conflicting movement as a part of ICU*
1 Counts conducted by: City Traffic Counters
2 Capacity expressed in veh/hour of green

LINSCOTT, LAW & GREENSPAN, ENGINEERS
600 S. Lake Avenue, Suite 500, Pasadena CA 91106
(626) 796.2322 Fax (626) 792-0941

INTERSECTION CAPACITY UTILIZATION

Rosemead Boulevard (SR-164) @ Whitmore Street
Peak hr: AM
Annual Growth: 0.82%

Phases I & II

N-S St: Rosemead Boulevard (SR-164)
E-W St: Whitmore Street
Project: Flair Spectrum Project/1-14-4074-1
File: ICU8

Date: 09/15/2014
Date of Count: 2014
Projection Year: 2019

	2014 EXIST. TRAFFIC			2014 EXISTING WITH PROJECT				2014 EXIST. W/PROJECT + MITIGATION				2019 FUTURE WITHOUT PROJECT				2019 FUTURE WITH PROJECT				2019 FUTURE W/PROJECT + MITIGATION			
	1	2	V/C	Added	Total	2	V/C	Added	Total	2	V/C	Added	Total	2	V/C	Added	Total	2	V/C	Added	Total	2	V/C
Movement	Volume	Capacity	Ratio	Volume	Volume	Capacity	Ratio	Volume	Volume	Capacity	Ratio	Volume	Volume	Capacity	Ratio	Volume	Volume	Capacity	Ratio	Volume	Volume	Capacity	Ratio
Nb Left	0	0	0.000	0	0	0	0.000	0	0	0	0.000	0	0	0	0.000	0	0	0	0.000	0	0	0	0.000
Nb Thru	1947	4800	0.406 *	41	1988	4800	0.414 *	0	1988	4800	0.414 *	161	2108	4800	0.439 *	41	2149	4800	0.448 *	0	2149	4800	0.448 *
Nb Right	242	1600	0.151	0	242	1600	0.151	0	242	1600	0.151	50	292	1600	0.183	0	292	1600	0.183	0	292	1600	0.183
Sb Left	92	1600	0.058 *	0	92	1600	0.058 *	0	92	1600	0.058 *	54	146	1600	0.091 *	0	146	1600	0.091 *	0	146	1600	0.091 *
Sb Thru	2036	4800	0.424	44	2080	4800	0.433	0	2080	4800	0.433	164	2200	4800	0.458	44	2244	4800	0.467	0	2244	4800	0.467
Sb Right	0	0	-	0	0	0	-	0	0	0	-	0	0	0	-	0	0	0	-	0	0	0	-
Eb Left	0	0	0.000 *	0	0	0	0.000 *	0	0	0	0.000 *	0	0	0	0.000 *	0	0	0	0.000 *	0	0	0	0.000 *
Eb Thru	0	0	0.000	0	0	0	0.000	0	0	0	0.000	0	0	0	0.000	0	0	0	0.000	0	0	0	0.000
Eb Right	0	0	-	0	0	0	-	0	0	0	-	0	0	0	-	0	0	0	-	0	0	0	-
Wb Left	35	0	0.022	0	35	0	0.022	0	35	0	0.022	6	41	0	0.026	0	41	0	0.026	0	41	0	0.026
Wb Thru	0	1600	0.031 *	0	0	1600	0.031 *	0	0	1600	0.031 *	0	0	1600	0.040 *	0	0	1600	0.040 *	0	0	1600	0.040 *
Wb Right	14	0	-	0	14	0	-	0	14	0	-	9	23	0	-	0	23	0	-	0	23	0	-
Yellow Allowance:			0.100 *				0.100 *				0.100 *				0.100 *				0.100 *				0.100 *
ICU			0.594				0.602				0.602				0.670				0.679				0.679
LOS			A				B				B				B				B				B

** Key conflicting movement as a part of ICU*
1 Counts conducted by: City Traffic Counters
2 Capacity expressed in veh/hour of green

LINSCOTT, LAW & GREENSPAN, ENGINEERS
600 S. Lake Avenue, Suite 500, Pasadena CA 91106
(626) 796.2322 Fax (626) 792-0941

INTERSECTION CAPACITY UTILIZATION

Rosemead Boulevard (SR-164) @ Whitmore Street
Peak hr: PM
Annual Growth: 0.82%

Phases I & II

N-S St: Rosemead Boulevard (SR-164)
E-W St: Whitmore Street
Project: Flair Spectrum Project/1-14-4074-1
File: ICU8

Date: 09/15/2014
Date of Count: 2014
Projection Year: 2019

	2014 EXIST. TRAFFIC			2014 EXISTING WITH PROJECT				2014 EXIST. W/PROJECT + MITIGATION				2019 FUTURE WITHOUT PROJECT				2019 FUTURE WITH PROJECT				2019 FUTURE W/PROJECT + MITIGATION			
	1	2	V/C	Added	Total	2	V/C	Added	Total	2	V/C	Added	Total	2	V/C	Added	Total	2	V/C	Added	Total	2	V/C
Movement	Volume	Capacity	Ratio	Volume	Volume	Capacity	Ratio	Volume	Volume	Capacity	Ratio	Volume	Volume	Capacity	Ratio	Volume	Volume	Capacity	Ratio	Volume	Volume	Capacity	Ratio
Nb Left	0	0	0.000 *	0	0	0	0.000 *	0	0	0	0.000 *	0	0	0	0.000 *	0	0	0	0.000 *	0	0	0	0.000 *
Nb Thru	1826	4800	0.380	90	1916	4800	0.399	0	1916	4800	0.399	158	1984	4800	0.413	90	2074	4800	0.432	0	2074	4800	0.432
Nb Right	41	1600	0.026	0	41	1600	0.026	0	41	1600	0.026	9	50	1600	0.031	0	50	1600	0.031	0	50	1600	0.031
Sb Left	5	1600	0.003	0	5	1600	0.003	0	5	1600	0.003	9	14	1600	0.009	0	14	1600	0.009	0	14	1600	0.009
Sb Thru	2163	4800	0.451 *	74	2237	4800	0.466 *	0	2237	4800	0.466 *	166	2329	4800	0.485 *	74	2403	4800	0.501 *	0	2403	4800	0.501 *
Sb Right	0	0	-	0	0	0	-	0	0	0	-	0	0	0	-	0	0	0	-	0	0	0	-
Eb Left	0	0	0.000 *	0	0	0	0.000 *	0	0	0	0.000 *	0	0	0	0.000 *	0	0	0	0.000 *	0	0	0	0.000 *
Eb Thru	0	0	0.000	0	0	0	0.000	0	0	0	0.000	0	0	0	0.000	0	0	0	0.000	0	0	0	0.000
Eb Right	0	0	-	0	0	0	-	0	0	0	-	0	0	0	-	0	0	0	-	0	0	0	-
Wb Left	260	0	0.163	0	260	0	0.163	0	260	0	0.163	47	307	0	0.192	0	307	0	0.192	0	307	0	0.192
Wb Thru	0	1600	0.201 *	0	0	1600	0.201 *	0	0	1600	0.201 *	0	0	1600	0.265 *	0	0	1600	0.265 *	0	0	1600	0.265 *
Wb Right	62	0	-	0	62	0	-	0	62	0	-	56	118	0	-	0	118	0	-	0	118	0	-
Yellow Allowance:			0.100 *				0.100 *				0.100 *				0.100 *				0.100 *				0.100 *
ICU			0.752				0.767				0.767				0.851				0.866				0.866
LOS			C				C				C				D				D				D

** Key conflicting movement as a part of ICU*
1 Counts conducted by: City Traffic Counters
2 Capacity expressed in veh/hour of green

LINSCOTT, LAW & GREENSPAN, ENGINEERS
600 S. Lake Avenue, Suite 500, Pasadena CA 91106
(626) 796.2322 Fax (626) 792-0941

INTERSECTION CAPACITY UTILIZATION

Rosemead Boulevard (SR-164) @ Whitmore Street
Peak hr: SAT MID-DAY
Annual Growth: 0.82%

Phases I & II

N-S St: Rosemead Boulevard (SR-164)
E-W St: Whitmore Street
Project: Flair Spectrum Project/1-14-4074-1
File: ICU8

Date: 09/15/2014
Date of Count: 2014
Projection Year: 2019

	2014 EXIST. TRAFFIC			2014 EXISTING WITH PROJECT				2014 EXIST. W/PROJECT + MITIGATION				2019 FUTURE WITHOUT PROJECT				2019 FUTURE WITH PROJECT				2019 FUTURE W/PROJECT + MITIGATION			
	1	2	V/C	Added	Total	2	V/C	Added	Total	2	V/C	Added	Total	2	V/C	Added	Total	2	V/C	Added	Total	2	V/C
Movement	Volume	Capacity	Ratio	Volume	Volume	Capacity	Ratio	Volume	Volume	Capacity	Ratio	Volume	Volume	Capacity	Ratio	Volume	Volume	Capacity	Ratio	Volume	Volume	Capacity	Ratio
Nb Left	0	0	0.000	0	0	0	0.000	0	0	0	0.000	0	0	0	0.000	0	0	0	0.000	0	0	0	0.000
Nb Thru	1944	4800	0.405 *	132	2076	4800	0.433 *	0	2076	4800	0.433 *	124	2068	4800	0.431 *	132	2200	4800	0.458 *	0	2200	4800	0.458 *
Nb Right	22	1600	0.014	0	22	1600	0.014	0	22	1600	0.014	8	30	1600	0.019	0	30	1600	0.019	0	30	1600	0.019
Sb Left	24	1600	0.015 *	0	24	1600	0.015 *	0	24	1600	0.015 *	9	33	1600	0.021 *	0	33	1600	0.021 *	0	33	1600	0.021 *
Sb Thru	1899	4800	0.396	121	2020	4800	0.421	0	2020	4800	0.421	122	2021	4800	0.421	121	2142	4800	0.446	0	2142	4800	0.446
Sb Right	0	0	-	0	0	0	-	0	0	0	-	0	0	0	-	0	0	0	-	0	0	0	-
Eb Left	0	0	0.000 *	0	0	0	0.000 *	0	0	0	0.000 *	0	0	0	0.000 *	0	0	0	0.000 *	0	0	0	0.000 *
Eb Thru	0	0	0.000	0	0	0	0.000	0	0	0	0.000	0	0	0	0.000	0	0	0	0.000	0	0	0	0.000
Eb Right	0	0	-	0	0	0	-	0	0	0	-	0	0	0	-	0	0	0	-	0	0	0	-
Wb Left	19	0	0.012	0	19	0	0.012	0	19	0	0.012	7	26	0	0.016	0	26	0	0.016	0	26	0	0.016
Wb Thru	0	1600	0.024 *	0	0	1600	0.024 *	0	0	1600	0.024 *	0	0	1600	0.034 *	0	0	1600	0.034 *	0	0	1600	0.034 *
Wb Right	20	0	-	0	20	0	-	0	20	0	-	9	29	0	-	0	29	0	-	0	29	0	-
Yellow Allowance:			0.100 *				0.100 *				0.100 *				0.100 *				0.100 *				0.100 *
ICU			0.544				0.572				0.572				0.586				0.613				0.613
LOS			A				A				A				A				B				B

** Key conflicting movement as a part of ICU*
1 Counts conducted by: City Traffic Counters
2 Capacity expressed in veh/hour of green

LINSCOTT, LAW & GREENSPAN, ENGINEERS
600 S. Lake Avenue, Suite 500, Pasadena CA 91106
(626) 796.2322 Fax (626) 792-0941

INTERSECTION CAPACITY UTILIZATION

N-S St: Rosemead Boulevard (SR-164)
E-W St: Whitmore Street
Project: Flair Spectrum Project/1-14-4074-1
File: ICU8

Rosemead Boulevard (SR-164) @ Whitmore Street
Peak hr: AM
Annual Growth: 0.52%

General Plan Buildout (Phases I & II)

Date: 09/15/2014
Date of Count: 2014
Projection Year: 2035

	2014 EXIST. TRAFFIC			2014 EXISTING WITH PROJECT				2014 EXIST. W/PROJECT + MITIGATION				2035 FUTURE WITHOUT PROJECT				2035 FUTURE WITH PROJECT				2035 FUTURE W/PROJECT + MITIGATION			
	1	2	V/C	Added	Total	2	V/C	Added	Total	2	V/C	Added	Total	2	V/C	Added	Total	2	V/C	Added	Total	2	V/C
Movement	Volume	Capacity	Ratio	Volume	Volume	Capacity	Ratio	Volume	Volume	Capacity	Ratio	Volume	Volume	Capacity	Ratio	Volume	Volume	Capacity	Ratio	Volume	Volume	Capacity	Ratio
Nb Left	0	0	0.000	0	0	0	0.000	0	0	0	0.000	0	0	0	0.000	0	0	0	0.000	0	0	0	0.000
Nb Thru	1947	4800	0.406 *	41	1988	4800	0.414 *	0	1988	4800	0.414 *	304	2251	4800	0.469 *	41	2292	4800	0.478 *	0	2292	4800	0.478 *
Nb Right	242	1600	0.151	0	242	1600	0.151	0	242	1600	0.151	68	310	1600	0.194	0	310	1600	0.194	0	310	1600	0.194
Sb Left	92	1600	0.058 *	0	92	1600	0.058 *	0	92	1600	0.058 *	61	153	1600	0.095 *	0	153	1600	0.095 *	0	153	1600	0.095 *
Sb Thru	2036	4800	0.424	44	2080	4800	0.433	0	2080	4800	0.433	313	2349	4800	0.489	44	2393	4800	0.499	0	2393	4800	0.499
Sb Right	0	0	-	0	0	0	-	0	0	0	-	0	0	0	-	0	0	0	-	0	0	0	-
Eb Left	0	0	0.000 *	0	0	0	0.000 *	0	0	0	0.000 *	0	0	0	0.000 *	0	0	0	0.000 *	0	0	0	0.000 *
Eb Thru	0	0	0.000	0	0	0	0.000	0	0	0	0.000	0	0	0	0.000	0	0	0	0.000	0	0	0	0.000
Eb Right	0	0	-	0	0	0	-	0	0	0	-	0	0	0	-	0	0	0	-	0	0	0	-
Wb Left	35	0	0.022	0	35	0	0.022	0	35	0	0.022	9	44	0	0.028	0	44	0	0.028	0	44	0	0.028
Wb Thru	0	1600	0.031 *	0	0	1600	0.031 *	0	0	1600	0.031 *	0	0	1600	0.042 *	0	0	1600	0.042 *	0	0	1600	0.042 *
Wb Right	14	0	-	0	14	0	-	0	14	0	-	10	24	0	-	0	24	0	-	0	24	0	-
Yellow Allowance:			0.100 *				0.100 *				0.100 *				0.100 *				0.100 *				0.100 *
ICU			0.594				0.602				0.602				0.707				0.715				0.715
LOS			A				B				B				C				C				C

** Key conflicting movement as a part of ICU*
1 Counts conducted by: City Traffic Counters
2 Capacity expressed in veh/hour of green

LINSCOTT, LAW & GREENSPAN, ENGINEERS
600 S. Lake Avenue, Suite 500, Pasadena CA 91106
(626) 796.2322 Fax (626) 792-0941

INTERSECTION CAPACITY UTILIZATION

N-S St: Rosemead Boulevard (SR-164)
E-W St: Whitmore Street
Project: Flair Spectrum Project/1-14-4074-1
File: ICU8

Rosemead Boulevard (SR-164) @ Whitmore Street
Peak hr: PM
Annual Growth: 0.52%

General Plan Buildout (Phases I & II)

Date: 09/15/2014
Date of Count: 2014
Projection Year: 2035

	2014 EXIST. TRAFFIC			2014 EXISTING WITH PROJECT				2014 EXIST. W/PROJECT + MITIGATION				2035 FUTURE WITHOUT PROJECT				2035 FUTURE WITH PROJECT				2035 FUTURE W/PROJECT + MITIGATION			
	1	2	V/C	Added	Total	2	V/C	Added	Total	2	V/C	Added	Total	2	V/C	Added	Total	2	V/C	Added	Total	2	V/C
Movement	Volume	Capacity	Ratio	Volume	Volume	Capacity	Ratio	Volume	Volume	Capacity	Ratio	Volume	Volume	Capacity	Ratio	Volume	Volume	Capacity	Ratio	Volume	Volume	Capacity	Ratio
Nb Left	0	0	0.000 *	0	0	0	0.000 *	0	0	0	0.000 *	0	0	0	0.000 *	0	0	0	0.000 *	0	0	0	0.000 *
Nb Thru	1826	4800	0.380	90	1916	4800	0.399	0	1916	4800	0.399	292	2118	4800	0.441	90	2208	4800	0.460	0	2208	4800	0.460
Nb Right	41	1600	0.026	0	41	1600	0.026	0	41	1600	0.026	12	53	1600	0.033	0	53	1600	0.033	0	53	1600	0.033
Sb Left	5	1600	0.003	0	5	1600	0.003	0	5	1600	0.003	10	15	1600	0.009	0	15	1600	0.009	0	15	1600	0.009
Sb Thru	2163	4800	0.451 *	74	2237	4800	0.466 *	0	2237	4800	0.466 *	325	2488	4800	0.518 *	74	2562	4800	0.534 *	0	2562	4800	0.534 *
Sb Right	0	0	-	0	0	0	-	0	0	0	-	0	0	0	-	0	0	0	-	0	0	0	-
Eb Left	0	0	0.000 *	0	0	0	0.000 *	0	0	0	0.000 *	0	0	0	0.000 *	0	0	0	0.000 *	0	0	0	0.000 *
Eb Thru	0	0	0.000	0	0	0	0.000	0	0	0	0.000	0	0	0	0.000	0	0	0	0.000	0	0	0	0.000
Eb Right	0	0	-	0	0	0	-	0	0	0	-	0	0	0	-	0	0	0	-	0	0	0	-
Wb Left	260	0	0.163	0	260	0	0.163	0	260	0	0.163	66	326	0	0.204	0	326	0	0.204	0	326	0	0.204
Wb Thru	0	1600	0.201 *	0	0	1600	0.201 *	0	0	1600	0.201 *	0	0	1600	0.280 *	0	0	1600	0.280 *	0	0	1600	0.280 *
Wb Right	62	0	-	0	62	0	-	0	62	0	-	60	122	0	-	0	122	0	-	0	122	0	-
Yellow Allowance:			0.100 *				0.100 *				0.100 *				0.100 *				0.100 *				0.100 *
ICU			0.752				0.767				0.767				0.898				0.914				0.914
LOS			C				C				C				D				E				E

** Key conflicting movement as a part of ICU*
1 Counts conducted by: City Traffic Counters
2 Capacity expressed in veh/hour of green

LINSCOTT, LAW & GREENSPAN, ENGINEERS
600 S. Lake Avenue, Suite 500, Pasadena CA 91106
(626) 796.2322 Fax (626) 792-0941

INTERSECTION CAPACITY UTILIZATION

Rosemead Boulevard (SR-164) @ Whitmore Street
Peak hr: SAT MID-DAY
Annual Growth: 0.52%

General Plan Buildout (Phases I & II)

N-S St: Rosemead Boulevard (SR-164)
E-W St: Whitmore Street
Project: Flair Spectrum Project/1-14-4074-1
File: ICU8

Date: 09/15/2014
Date of Count: 2014
Projection Year: 2035

	2014 EXIST. TRAFFIC			2014 EXISTING WITH PROJECT				2014 EXIST. W/PROJECT + MITIGATION				2035 FUTURE WITHOUT PROJECT				2035 FUTURE WITH PROJECT				2035 FUTURE W/PROJECT + MITIGATION			
	1	2	V/C	Added	Total	2	V/C	Added	Total	2	V/C	Added	Total	2	V/C	Added	Total	2	V/C	Added	Total	2	V/C
Movement	Volume	Capacity	Ratio	Volume	Volume	Capacity	Ratio	Volume	Volume	Capacity	Ratio	Volume	Volume	Capacity	Ratio	Volume	Volume	Capacity	Ratio	Volume	Volume	Capacity	Ratio
Nb Left	0	0	0.000	0	0	0	0.000	0	0	0	0.000	0	0	0	0.000	0	0	0	0.000	0	0	0	0.000
Nb Thru	1944	4800	0.405 *	132	2076	4800	0.433 *	0	2076	4800	0.433 *	267	2211	4800	0.461 *	132	2343	4800	0.488 *	0	2343	4800	0.488 *
Nb Right	22	1600	0.014	0	22	1600	0.014	0	22	1600	0.014	10	32	1600	0.020	0	32	1600	0.020	0	32	1600	0.020
Sb Left	24	1600	0.015 *	0	24	1600	0.015 *	0	24	1600	0.015 *	11	35	1600	0.022 *	0	35	1600	0.022 *	0	35	1600	0.022 *
Sb Thru	1899	4800	0.396	121	2020	4800	0.421	0	2020	4800	0.421	262	2161	4800	0.450	121	2282	4800	0.475	0	2282	4800	0.475
Sb Right	0	0	-	0	0	0	-	0	0	0	-	0	0	0	-	0	0	0	-	0	0	0	-
Eb Left	0	0	0.000 *	0	0	0	0.000 *	0	0	0	0.000 *	0	0	0	0.000 *	0	0	0	0.000 *	0	0	0	0.000 *
Eb Thru	0	0	0.000	0	0	0	0.000	0	0	0	0.000	0	0	0	0.000	0	0	0	0.000	0	0	0	0.000
Eb Right	0	0	-	0	0	0	-	0	0	0	-	0	0	0	-	0	0	0	-	0	0	0	-
Wb Left	19	0	0.012	0	19	0	0.012	0	19	0	0.012	8	27	0	0.017	0	27	0	0.017	0	27	0	0.017
Wb Thru	0	1600	0.024 *	0	0	1600	0.024 *	0	0	1600	0.024 *	0	0	1600	0.036 *	0	0	1600	0.036 *	0	0	1600	0.036 *
Wb Right	20	0	-	0	20	0	-	0	20	0	-	10	30	0	-	0	30	0	-	0	30	0	-
Yellow Allowance:			0.100 *				0.100 *				0.100 *				0.100 *				0.100 *				0.100 *
ICU			0.544				0.572				0.572				0.618				0.646				0.646
LOS			A				A				A				B				B				B

** Key conflicting movement as a part of ICU*
1 Counts conducted by: City Traffic Counters
2 Capacity expressed in veh/hour of green

LINSCOTT, LAW & GREENSPAN, ENGINEERS
600 S. Lake Avenue, Suite 500, Pasadena CA 91106
(626) 796.2322 Fax (626) 792-0941

INTERSECTION CAPACITY UTILIZATION

Rosemead Boulevard (SR-164) @ Garvey Avenue
Peak hr: AM
Annual Growth: 0.82%

Phase I

N-S St: Rosemead Boulevard (SR-164)
E-W St: Garvey Avenue
Project: Flair Spectrum Project/1-14-4074-1
File: ICU9

Date: 09/28/2014
Date of Count: 2014
Projection Year: 2016

	2014 EXIST. TRAFFIC			2014 EXISTING WITH PROJECT				2014 EXIST. W/PROJECT + MITIGATION				2016 FUTURE WITHOUT PROJECT				2016 FUTURE WITH PROJECT				2016 FUTURE W/PROJECT + MITIGATION			
	1	2	V/C	Added	Total	2	V/C	Added	Total	2	V/C	Added	Total	2	V/C	Added	Total	2	V/C	Added	Total	2	V/C
Movement	Volume	Capacity	Ratio	Volume	Volume	Capacity	Ratio	Volume	Volume	Capacity	Ratio	Volume	Volume	Capacity	Ratio	Volume	Volume	Capacity	Ratio	Volume	Volume	Capacity	Ratio
Nb Left	160	2880	0.056	0	160	2880	0.056	0	160	2880	0.056	32	192	2880	0.067	0	192	2880	0.067	0	192	2880	0.067
Nb Thru	1583	4800	0.340 *	12	1595	4800	0.342 *	0	1595	4800	0.342 *	90	1673	4800	0.359 *	12	1685	4800	0.361 *	0	1685	4800	0.361 *
Nb Right	47	0	-	0	47	0	-	0	47	0	-	1	48	0	-	0	48	0	-	0	48	0	-
Sb Left	405	2880	0.141 *	7	412	2880	0.143 *	0	412	2880	0.143 *	11	416	2880	0.144 *	7	423	2880	0.147 *	0	423	2880	0.147 *
Sb Thru	1524	4800	0.359	6	1530	4800	0.361	0	1530	4800	0.361	56	1580	4800	0.382	6	1586	4800	0.384	0	1586	4800	0.384
Sb Right	201	0	-	3	204	0	-	0	204	0	-	53	254	0	-	3	257	0	-	0	257	0	-
Eb Left	208	1600	0.130 *	7	215	1600	0.134 *	0	215	1600	0.134 *	38	246	1600	0.154 *	7	253	1600	0.158 *	0	253	1600	0.158 *
Eb Thru	374	3200	0.152	0	374	3200	0.152	0	374	3200	0.152	34	408	3200	0.170	0	408	3200	0.170	0	408	3200	0.170
Eb Right	113	0	-	0	113	0	-	0	113	0	-	22	135	0	-	0	135	0	-	0	135	0	-
Wb Left	224	1600	0.140	0	224	1600	0.140	0	224	1600	0.140	4	228	1600	0.142	0	228	1600	0.142	0	228	1600	0.142
Wb Thru	565	3200	0.177 *	0	565	3200	0.177 *	0	565	3200	0.177 *	60	625	3200	0.195 *	0	625	3200	0.195 *	0	625	3200	0.195 *
Wb Right [3	401	1600	0.110	16	417	1600	0.118	0	417	1600	0.118	27	428	1600	0.123	16	444	1600	0.130	0	444	1600	0.130
Yellow Allowance:			0.100 *				0.100 *				0.100 *				0.100 *				0.100 *				0.100 *
ICU			0.887				0.896				0.846				0.952				0.962				0.912
LOS			D				D				D				E				E				E

** Key conflicting movement as a part of ICU*
1 Counts conducted by: City Traffic Counters
2 Capacity expressed in veh/hour of green
3 The westbound right-turn lane has an overlapping phase with the southbound left-turn phase.

LINSCOTT, LAW & GREENSPAN, ENGINEERS
600 S. Lake Avenue, Suite 500, Pasadena CA 91106
(626) 796.2322 Fax (626) 792-0941

INTERSECTION CAPACITY UTILIZATION

N-S St: Rosemead Boulevard (SR-164)
E-W St: Garvey Avenue
Project: Flair Spectrum Project/1-14-4074-1
File: ICU9

Rosemead Boulevard (SR-164) @ Garvey Avenue
Peak hr: PM
Annual Growth: 0.82%

Phase I

Date: 09/28/2014
Date of Count: 2014
Projection Year: 2016

	2014 EXIST. TRAFFIC			2014 EXISTING WITH PROJECT				2014 EXIST. W/PROJECT + MITIGATION				2016 FUTURE WITHOUT PROJECT				2016 FUTURE WITH PROJECT				2016 FUTURE W/PROJECT + MITIGATION			
	1	2	V/C	Added	Total	2	V/C	Added	Total	2	V/C	Added	Total	2	V/C	Added	Total	2	V/C	Added	Total	2	V/C
Movement	Volume	Capacity	Ratio	Volume	Volume	Capacity	Ratio	Volume	Volume	Capacity	Ratio	Volume	Volume	Capacity	Ratio	Volume	Volume	Capacity	Ratio	Volume	Volume	Capacity	Ratio
Nb Left	249	2880	0.086 *	0	249	2880	0.086 *	0	249	2880	0.086 *	40	289	2880	0.100 *	0	289	2880	0.100 *	0	289	2880	0.100 *
Nb Thru	1317	4800	0.302	22	1339	4800	0.306	0	1339	4800	0.306	39	1356	4800	0.310	22	1378	4800	0.315	0	1378	4800	0.315
Nb Right	132	0	-	0	132	0	-	0	132	0	-	2	134	0	-	0	134	0	-	0	134	0	-
Sb Left	458	2880	0.159	28	486	2880	0.169	0	486	2880	0.169	25	483	2880	0.168	28	511	2880	0.177	0	511	2880	0.177
Sb Thru	1778	4800	0.407 *	22	1800	4800	0.414 *	0	1800	4800	0.414 *	77	1855	4800	0.433 *	22	1877	4800	0.440 *	0	1877	4800	0.440 *
Sb Right	176	0	-	12	188	0	-	0	188	0	-	48	224	0	-	12	236	0	-	0	236	0	-
Eb Left	193	1600	0.121	11	204	1600	0.128	0	204	1600	0.128	68	261	1600	0.163	11	272	1600	0.170	0	272	1600	0.170
Eb Thru	606	3200	0.222 *	0	606	3200	0.222 *	0	606	3200	0.222 *	81	687	3200	0.261 *	0	687	3200	0.261 *	0	687	3200	0.261 *
Eb Right	105	0	-	0	105	0	-	0	105	0	-	44	149	0	-	0	149	0	-	0	149	0	-
Wb Left	169	1600	0.106 *	0	169	1600	0.106 *	0	169	1600	0.106 *	3	172	1600	0.107 *	0	172	1600	0.107 *	0	172	1600	0.107 *
Wb Thru	499	3200	0.156	0	499	3200	0.156	0	499	3200	0.156	68	567	3200	0.177	0	567	3200	0.177	0	567	3200	0.177
Wb Right [3	338	1600	0.052	28	366	1600	0.060	0	366	1600	0.060	12	350	1600	0.051	28	378	1600	0.059	0	378	1600	0.059
Yellow Allowance:			0.100 *				0.100 *				0.100 *				0.100 *				0.100 *				0.100 *
ICU			0.921				0.928				0.878				1.002				1.009				0.959
LOS			E				E				D				F				F				E

** Key conflicting movement as a part of ICU*
1 Counts conducted by: City Traffic Counters
2 Capacity expressed in veh/hour of green
3 The westbound right-turn lane has an overlapping phase with the southbound left-turn phase.

LINSCOTT, LAW & GREENSPAN, ENGINEERS
600 S. Lake Avenue, Suite 500, Pasadena CA 91106
(626) 796.2322 Fax (626) 792-0941

INTERSECTION CAPACITY UTILIZATION

Rosemead Boulevard (SR-164) @ Garvey Avenue
Peak hr: SAT MID-DAY
Annual Growth: 0.82%

Phase I

N-S St: Rosemead Boulevard (SR-164)
E-W St: Garvey Avenue
Project: Flair Spectrum Project/1-14-4074-1
File: ICU9

Date: 09/28/2014
Date of Count: 2014
Projection Year: 2016

	2014 EXIST. TRAFFIC			2014 EXISTING WITH PROJECT				2014 EXIST. W/PROJECT + MITIGATION				2016 FUTURE WITHOUT PROJECT				2016 FUTURE WITH PROJECT				2016 FUTURE W/PROJECT + MITIGATION			
	1	2	V/C	Added	Total	2	V/C	Added	Total	2	V/C	Added	Total	2	V/C	Added	Total	2	V/C	Added	Total	2	V/C
Movement	Volume	Capacity	Ratio	Volume	Volume	Capacity	Ratio	Volume	Volume	Capacity	Ratio	Volume	Volume	Capacity	Ratio	Volume	Volume	Capacity	Ratio	Volume	Volume	Capacity	Ratio
Nb Left	280	2880	0.097	0	280	2880	0.097	0	280	2880	0.097	44	324	2880	0.112	0	324	2880	0.112	0	324	2880	0.112
Nb Thru	1178	4800	0.268 *	41	1219	4800	0.277 *	0	1219	4800	0.277 *	29	1207	4800	0.275 *	41	1248	4800	0.283 *	0	1248	4800	0.283 *
Nb Right	110	0	-	0	110	0	-	0	110	0	-	2	112	0	-	0	112	0	-	0	112	0	-
Sb Left	528	2880	0.183 *	48	576	2880	0.200 *	0	576	2880	0.200 *	13	541	2880	0.188 *	48	589	2880	0.204 *	0	589	2880	0.204 *
Sb Thru	1101	4800	0.271	38	1139	4800	0.283	0	1139	4800	0.283	27	1128	4800	0.285	38	1166	4800	0.297	0	1166	4800	0.297
Sb Right	202	0	-	19	221	0	-	0	221	0	-	38	240	0	-	19	259	0	-	0	259	0	-
Eb Left	329	1600	0.206	21	350	1600	0.219	0	350	1600	0.219	39	368	1600	0.230	21	389	1600	0.243 *	0	389	1600	0.243 *
Eb Thru	641	3200	0.219 *	0	641	3200	0.219 *	0	641	3200	0.219 *	73	714	3200	0.253 *	0	714	3200	0.253	0	714	3200	0.253
Eb Right	60	0	-	0	60	0	-	0	60	0	-	37	97	0	-	0	97	0	-	0	97	0	-
Wb Left	236	1600	0.148 *	0	236	1600	0.148 *	0	236	1600	0.148 *	4	240	1600	0.150 *	0	240	1600	0.150	0	240	1600	0.150
Wb Thru	467	3200	0.146	0	467	3200	0.146	0	467	3200	0.146	74	541	3200	0.169	0	541	3200	0.169 *	0	541	3200	0.169 *
Wb Right [3	400	1600	0.067	52	452	1600	0.083	0	452	1600	0.083	12	412	1600	0.070	52	464	1600	0.085	0	464	1600	0.085
Yellow Allowance:			0.100 *				0.100 *				0.100 *				0.100 *				0.100 *				0.100 *
ICU			0.918				0.943				0.893				0.966				1.000				0.950
LOS			E				E				D				E				E				E

** Key conflicting movement as a part of ICU*
1 Counts conducted by: City Traffic Counters
2 Capacity expressed in veh/hour of green
3 The westbound right-turn lane has an overlapping phase with the southbound left-turn phase.

LINSCOTT, LAW & GREENSPAN, ENGINEERS
600 S. Lake Avenue, Suite 500, Pasadena CA 91106
(626) 796.2322 Fax (626) 792-0941

INTERSECTION CAPACITY UTILIZATION

Rosemead Boulevard (SR-164) @ Garvey Avenue
Peak hr: AM
Annual Growth: 0.82%

Phases I & II

N-S St: Rosemead Boulevard (SR-164)
E-W St: Garvey Avenue
Project: Flair Spectrum Project/1-14-4074-1
File: ICU9

Date: 09/28/2014
Date of Count: 2014
Projection Year: 2019

	2014 EXIST. TRAFFIC			2014 EXISTING WITH PROJECT				2014 EXIST. W/PROJECT + MITIGATION				2019 FUTURE WITHOUT PROJECT				2019 FUTURE WITH PROJECT				2019 FUTURE W/PROJECT + MITIGATION			
	1	2	V/C	Added	Total	2	V/C	Added	Total	2	V/C	Added	Total	2	V/C	Added	Total	2	V/C	Added	Total	2	V/C
Movement	Volume	Capacity	Ratio	Volume	Volume	Capacity	Ratio	Volume	Volume	Capacity	Ratio	Volume	Volume	Capacity	Ratio	Volume	Volume	Capacity	Ratio	Volume	Volume	Capacity	Ratio
Nb Left	160	2880	0.056	0	160	2880	0.056	0	160	2880	0.056	36	196	2880	0.068	0	196	2880	0.068	0	196	2880	0.068
Nb Thru	1583	4800	0.340 *	14	1597	4800	0.343 *	0	1597	4800	0.343 *	130	1713	4800	0.367 *	14	1727	4800	0.370 *	0	1727	4800	0.370 *
Nb Right	47	0	-	0	47	0	-	0	47	0	-	2	49	0	-	0	49	0	-	0	49	0	-
Sb Left	405	2880	0.141 *	20	425	2880	0.148 *	0	425	2880	0.148 *	21	426	2880	0.148 *	20	446	2880	0.155 *	0	446	2880	0.155 *
Sb Thru	1524	4800	0.359	15	1539	4800	0.364	0	1539	4800	0.364	95	1619	4800	0.391	15	1634	4800	0.396	0	1634	4800	0.396
Sb Right	201	0	-	9	210	0	-	0	210	0	-	58	259	0	-	9	268	0	-	0	268	0	-
Eb Left	208	1600	0.130 *	8	216	1600	0.135 *	0	216	1600	0.135 *	44	252	1600	0.157 *	8	260	1600	0.162 *	0	260	1600	0.162 *
Eb Thru	374	3200	0.152	0	374	3200	0.152	0	374	3200	0.152	44	418	3200	0.174	0	418	3200	0.174	0	418	3200	0.174
Eb Right	113	0	-	0	113	0	-	0	113	0	-	25	138	0	-	0	138	0	-	0	138	0	-
Wb Left	224	1600	0.140	0	224	1600	0.140	0	224	1600	0.140	9	233	1600	0.146	0	233	1600	0.146	0	233	1600	0.146
Wb Thru	565	3200	0.177 *	0	565	3200	0.177 *	0	565	3200	0.177 *	75	640	3200	0.200 *	0	640	3200	0.200 *	0	640	3200	0.200 *
Wb Right [3	401	1600	0.110	19	420	1600	0.115	0	420	1600	0.115	37	438	1600	0.126	19	457	1600	0.131	0	457	1600	0.131
Yellow Allowance:			0.100 *				0.100 *				0.100 *				0.100 *				0.100 *				0.100 *
ICU			0.887				0.902				0.852				0.972				0.987				0.937
LOS			D				E				D				E				E				E

** Key conflicting movement as a part of ICU*
1 Counts conducted by: City Traffic Counters
2 Capacity expressed in veh/hour of green
3 The westbound right-turn lane has an overlapping phase with the southbound left-turn phase.

LINSCOTT, LAW & GREENSPAN, ENGINEERS
600 S. Lake Avenue, Suite 500, Pasadena CA 91106
(626) 796.2322 Fax (626) 792-0941

INTERSECTION CAPACITY UTILIZATION

Rosemead Boulevard (SR-164) @ Garvey Avenue
Peak hr: PM
Annual Growth: 0.82%

Phases I & II

N-S St: Rosemead Boulevard (SR-164)
E-W St: Garvey Avenue
Project: Flair Spectrum Project/1-14-4074-1
File: ICU9

Date: 09/28/2014
Date of Count: 2014
Projection Year: 2019

	2014 EXIST. TRAFFIC			2014 EXISTING WITH PROJECT				2014 EXIST. W/PROJECT + MITIGATION				2019 FUTURE WITHOUT PROJECT				2019 FUTURE WITH PROJECT				2019 FUTURE W/PROJECT + MITIGATION			
	1	2	V/C	Added	Total	2	V/C	Added	Total	2	V/C	Added	Total	2	V/C	Added	Total	2	V/C	Added	Total	2	V/C
Movement	Volume	Capacity	Ratio	Volume	Volume	Capacity	Ratio	Volume	Volume	Capacity	Ratio	Volume	Volume	Capacity	Ratio	Volume	Volume	Capacity	Ratio	Volume	Volume	Capacity	Ratio
Nb Left	249	2880	0.086 *	0	249	2880	0.086 *	0	249	2880	0.086 *	46	295	2880	0.103 *	0	295	2880	0.103 *	0	295	2880	0.103 *
Nb Thru	1317	4800	0.302	31	1348	4800	0.308	0	1348	4800	0.308	72	1389	4800	0.318	31	1420	4800	0.324	0	1420	4800	0.324
Nb Right	132	0	-	0	132	0	-	0	132	0	-	6	138	0	-	0	138	0	-	0	138	0	-
Sb Left	458	2880	0.159	34	492	2880	0.171	0	492	2880	0.171	36	494	2880	0.172	34	528	2880	0.183	0	528	2880	0.183
Sb Thru	1778	4800	0.407 *	26	1804	4800	0.416 *	0	1804	4800	0.416 *	122	1900	4800	0.443 *	26	1926	4800	0.452 *	0	1926	4800	0.452 *
Sb Right	176	0	-	15	191	0	-	0	191	0	-	52	228	0	-	15	243	0	-	0	243	0	-
Eb Left	193	1600	0.121	16	209	1600	0.131	0	209	1600	0.131	73	266	1600	0.166	16	282	1600	0.176	0	282	1600	0.176
Eb Thru	606	3200	0.222 *	0	606	3200	0.222 *	0	606	3200	0.222 *	96	702	3200	0.267 *	0	702	3200	0.267 *	0	702	3200	0.267 *
Eb Right	105	0	-	0	105	0	-	0	105	0	-	46	151	0	-	0	151	0	-	0	151	0	-
Wb Left	169	1600	0.106 *	0	169	1600	0.106 *	0	169	1600	0.106 *	7	176	1600	0.110 *	0	176	1600	0.110 *	0	176	1600	0.110 *
Wb Thru	499	3200	0.156	0	499	3200	0.156	0	499	3200	0.156	81	580	3200	0.181	0	580	3200	0.181	0	580	3200	0.181
Wb Right [3	338	1600	0.052	40	378	1600	0.065	0	378	1600	0.065	20	358	1600	0.052	40	398	1600	0.065	0	398	1600	0.065
Yellow Allowance:			0.100 *				0.100 *				0.100 *				0.100 *				0.100 *				0.100 *
ICU			0.921				0.930				0.880				1.023				1.031				0.981
LOS			E				E				D				F				F				E

** Key conflicting movement as a part of ICU*
1 Counts conducted by: City Traffic Counters
2 Capacity expressed in veh/hour of green
3 The westbound right-turn lane has an overlapping phase with the southbound left-turn phase.

LINSCOTT, LAW & GREENSPAN, ENGINEERS
600 S. Lake Avenue, Suite 500, Pasadena CA 91106
(626) 796.2322 Fax (626) 792-0941

INTERSECTION CAPACITY UTILIZATION

Rosemead Boulevard (SR-164) @ Garvey Avenue
Peak hr: SAT MID-DAY
Annual Growth: 0.82%

Phases I & II

N-S St: Rosemead Boulevard (SR-164)
E-W St: Garvey Avenue
Project: Flair Spectrum Project/1-14-4074-1
File: ICU9

Date: 09/28/2014
Date of Count: 2014
Projection Year: 2019

	2014 EXIST. TRAFFIC			2014 EXISTING WITH PROJECT				2014 EXIST. W/PROJECT + MITIGATION				2019 FUTURE WITHOUT PROJECT				2019 FUTURE WITH PROJECT				2019 FUTURE W/PROJECT + MITIGATION			
	1	2	V/C	Added	Total	2	V/C	Added	Total	2	V/C	Added	Total	2	V/C	Added	Total	2	V/C	Added	Total	2	V/C
Movement	Volume	Capacity	Ratio	Volume	Volume	Capacity	Ratio	Volume	Volume	Capacity	Ratio	Volume	Volume	Capacity	Ratio	Volume	Volume	Capacity	Ratio	Volume	Volume	Capacity	Ratio
Nb Left	280	2880	0.097	0	280	2880	0.097	0	280	2880	0.097	51	331	2880	0.115	0	331	2880	0.115	0	331	2880	0.115
Nb Thru	1178	4800	0.268 *	47	1225	4800	0.278 *	0	1225	4800	0.278 *	59	1237	4800	0.282 *	47	1284	4800	0.291 *	0	1284	4800	0.291 *
Nb Right	110	0	-	0	110	0	-	0	110	0	-	5	115	0	-	0	115	0	-	0	115	0	-
Sb Left	528	2880	0.183 *	56	584	2880	0.203 *	0	584	2880	0.203 *	26	554	2880	0.192 *	56	610	2880	0.212 *	0	610	2880	0.212 *
Sb Thru	1101	4800	0.271	44	1145	4800	0.285	0	1145	4800	0.285	55	1156	4800	0.292	44	1200	4800	0.306	0	1200	4800	0.306
Sb Right	202	0	-	22	224	0	-	0	224	0	-	43	245	0	-	22	267	0	-	0	267	0	-
Eb Left	329	1600	0.206	25	354	1600	0.221 *	0	354	1600	0.221 *	48	377	1600	0.235	25	402	1600	0.251 *	0	402	1600	0.251 *
Eb Thru	641	3200	0.219 *	0	641	3200	0.219	0	641	3200	0.219	89	730	3200	0.259 *	0	730	3200	0.259	0	730	3200	0.259
Eb Right	60	0	-	0	60	0	-	0	60	0	-	39	99	0	-	0	99	0	-	0	99	0	-
Wb Left	236	1600	0.148 *	0	236	1600	0.148	0	236	1600	0.148	10	246	1600	0.154 *	0	246	1600	0.154	0	246	1600	0.154
Wb Thru	467	3200	0.146	0	467	3200	0.146 *	0	467	3200	0.146 *	85	552	3200	0.173	0	552	3200	0.173 *	0	552	3200	0.173 *
Wb Right [3	400	1600	0.067	61	461	1600	0.085	0	461	1600	0.085	22	422	1600	0.071	61	483	1600	0.090	0	483	1600	0.090
Yellow Allowance:			0.100 *				0.100 *				0.100 *				0.100 *				0.100 *				0.100 *
ICU			0.918				0.948				0.898				0.986				1.027				0.977
LOS			E				E				D				E				F				E

** Key conflicting movement as a part of ICU*
1 Counts conducted by: City Traffic Counters
2 Capacity expressed in veh/hour of green
3 The westbound right-turn lane has an overlapping phase with the southbound left-turn phase.

LINSCOTT, LAW & GREENSPAN, ENGINEERS
600 S. Lake Avenue, Suite 500, Pasadena CA 91106
(626) 796.2322 Fax (626) 792-0941

INTERSECTION CAPACITY UTILIZATION

N-S St: Rosemead Boulevard (SR-164)
E-W St: Garvey Avenue
Project: Flair Spectrum Project/1-14-4074-1
File: ICU9

Rosemead Boulevard (SR-164) @ Garvey Avenue
Peak hr: AM
Annual Growth: 0.52%

General Plan Buildout (Phases I & II)

Date: 09/28/2014
Date of Count: 2014
Projection Year: 2035

	2014 EXIST. TRAFFIC			2014 EXISTING WITH PROJECT				2014 EXIST. W/PROJECT + MITIGATION				2035 FUTURE WITHOUT PROJECT				2035 FUTURE WITH PROJECT				2035 FUTURE W/PROJECT + MITIGATION			
	1	2	V/C	Added	Total	2	V/C	Added	Total	2	V/C	Added	Total	2	V/C	Added	Total	2	V/C	Added	Total	2	V/C
Movement	Volume	Capacity	Ratio	Volume	Volume	Capacity	Ratio	Volume	Volume	Capacity	Ratio	Volume	Volume	Capacity	Ratio	Volume	Volume	Capacity	Ratio	Volume	Volume	Capacity	Ratio
Nb Left	160	2880	0.056	0	160	2880	0.056	0	160	2880	0.056	47	207	2880	0.072	0	207	2880	0.072	0	207	2880	0.072
Nb Thru	1583	4800	0.340 *	14	1597	4800	0.343 *	0	1597	4800	0.343 *	246	1829	4800	0.392 *	14	1843	4800	0.395 *	0	1843	4800	0.395 *
Nb Right	47	0	-	0	47	0	-	0	47	0	-	5	52	0	-	0	52	0	-	0	52	0	-
Sb Left	405	2880	0.141 *	20	425	2880	0.148 *	0	425	2880	0.148 *	51	456	2880	0.158 *	20	476	2880	0.165 *	0	476	2880	0.165 *
Sb Thru	1524	4800	0.359	15	1539	4800	0.364	0	1539	4800	0.364	206	1730	4800	0.418	15	1745	4800	0.423	0	1745	4800	0.423
Sb Right	201	0	-	9	210	0	-	0	210	0	-	73	274	0	-	9	283	0	-	0	283	0	-
Eb Left	208	1600	0.130 *	8	216	1600	0.135 *	0	216	1600	0.135 *	59	267	1600	0.167 *	8	275	1600	0.172 *	0	275	1600	0.172 *
Eb Thru	374	3200	0.152	0	374	3200	0.152	0	374	3200	0.152	71	445	3200	0.185	0	445	3200	0.185	0	445	3200	0.185
Eb Right	113	0	-	0	113	0	-	0	113	0	-	33	146	0	-	0	146	0	-	0	146	0	-
Wb Left	224	1600	0.140	0	224	1600	0.140	0	224	1600	0.140	26	250	1600	0.156	0	250	1600	0.156	0	250	1600	0.156
Wb Thru	565	3200	0.177 *	0	565	3200	0.177 *	0	565	3200	0.177 *	116	681	3200	0.213 *	0	681	3200	0.213 *	0	681	3200	0.213 *
Wb Right [3]	401	1600	0.110	19	420	1600	0.115	0	420	1600	0.115	66	467	1600	0.134	19	486	1600	0.139	0	486	1600	0.139
Yellow Allowance:			0.100 *				0.100 *				0.100 *				0.100 *				0.100 *				0.100 *
ICU			0.887				0.902				0.852				1.030				1.045				0.995
LOS			D				E				D				F				F				E

** Key conflicting movement as a part of ICU*
1 Counts conducted by: City Traffic Counters
2 Capacity expressed in veh/hour of green
3 The westbound right-turn lane has an overlapping phase with the southbound left-turn phase.

LINSCOTT, LAW & GREENSPAN, ENGINEERS
600 S. Lake Avenue, Suite 500, Pasadena CA 91106
(626) 796.2322 Fax (626) 792-0941

INTERSECTION CAPACITY UTILIZATION

N-S St: Rosemead Boulevard (SR-164)
E-W St: Garvey Avenue
Project: Flair Spectrum Project/1-14-4074-1
File: ICU9

Rosemead Boulevard (SR-164) @ Garvey Avenue
Peak hr: PM
Annual Growth: 0.52%

General Plan Buildout (Phases I & II)

Date: 09/28/2014
Date of Count: 2014
Projection Year: 2035

	2014 EXIST. TRAFFIC			2014 EXISTING WITH PROJECT				2014 EXIST. W/PROJECT + MITIGATION				2035 FUTURE WITHOUT PROJECT				2035 FUTURE WITH PROJECT				2035 FUTURE W/PROJECT + MITIGATION			
	1	2	V/C	Added	Total	2	V/C	Added	Total	2	V/C	Added	Total	2	V/C	Added	Total	2	V/C	Added	Total	2	V/C
Movement	Volume	Capacity	Ratio	Volume	Volume	Capacity	Ratio	Volume	Volume	Capacity	Ratio	Volume	Volume	Capacity	Ratio	Volume	Volume	Capacity	Ratio	Volume	Volume	Capacity	Ratio
Nb Left	249	2880	0.086 *	0	249	2880	0.086 *	0	249	2880	0.086 *	65	314	2880	0.109 *	0	314	2880	0.109 *	0	314	2880	0.109 *
Nb Thru	1317	4800	0.302	31	1348	4800	0.308	0	1348	4800	0.308	169	1486	4800	0.340	31	1517	4800	0.347	0	1517	4800	0.347
Nb Right	132	0	-	0	132	0	-	0	132	0	-	15	147	0	-	0	147	0	-	0	147	0	-
Sb Left	458	2880	0.159	34	492	2880	0.171	0	492	2880	0.171	70	528	2880	0.183	34	562	2880	0.195	0	562	2880	0.195
Sb Thru	1778	4800	0.407 *	26	1804	4800	0.416 *	0	1804	4800	0.416 *	253	2031	4800	0.473 *	26	2057	4800	0.482 *	0	2057	4800	0.482 *
Sb Right	176	0	-	15	191	0	-	0	191	0	-	65	241	0	-	15	256	0	-	0	256	0	-
Eb Left	193	1600	0.121	16	209	1600	0.131	0	209	1600	0.131	87	280	1600	0.175	16	296	1600	0.185	0	296	1600	0.185
Eb Thru	606	3200	0.222 *	0	606	3200	0.222 *	0	606	3200	0.222 *	141	747	3200	0.283 *	0	747	3200	0.283 *	0	747	3200	0.283 *
Eb Right	105	0	-	0	105	0	-	0	105	0	-	54	159	0	-	0	159	0	-	0	159	0	-
Wb Left	169	1600	0.106 *	0	169	1600	0.106 *	0	169	1600	0.106 *	19	188	1600	0.118 *	0	188	1600	0.118 *	0	188	1600	0.118 *
Wb Thru	499	3200	0.156	0	499	3200	0.156	0	499	3200	0.156	117	616	3200	0.193	0	616	3200	0.193	0	616	3200	0.193
Wb Right [3	338	1600	0.052	40	378	1600	0.065	0	378	1600	0.065	45	383	1600	0.056	40	423	1600	0.069	0	423	1600	0.069
Yellow Allowance:			0.100 *				0.100 *				0.100 *				0.100 *				0.100 *				0.100 *
ICU			0.921				0.930				0.880				1.083				1.092				1.042
LOS			E				E				D				F				F				F

** Key conflicting movement as a part of ICU*
1 Counts conducted by: City Traffic Counters
2 Capacity expressed in veh/hour of green
3 The westbound right-turn lane has an overlapping phase with the southbound left-turn phase.

LINSCOTT, LAW & GREENSPAN, ENGINEERS
600 S. Lake Avenue, Suite 500, Pasadena CA 91106
(626) 796.2322 Fax (626) 792-0941

INTERSECTION CAPACITY UTILIZATION

Rosemead Boulevard (SR-164) @ Garvey Avenue
Peak hr: SAT MID-DAY
Annual Growth: 0.52%

General Plan Buildout (Phases I & II)

N-S St: Rosemead Boulevard (SR-164)
E-W St: Garvey Avenue
Project: Flair Spectrum Project/1-14-4074-1
File: ICU9

Date: 09/28/2014
Date of Count: 2014
Projection Year: 2035

	2014 EXIST. TRAFFIC			2014 EXISTING WITH PROJECT				2014 EXIST. W/PROJECT + MITIGATION				2035 FUTURE WITHOUT PROJECT				2035 FUTURE WITH PROJECT				2035 FUTURE W/PROJECT + MITIGATION			
	1	2	V/C	Added	Total	2	V/C	Added	Total	2	V/C	Added	Total	2	V/C	Added	Total	2	V/C	Added	Total	2	V/C
Movement	Volume	Capacity	Ratio	Volume	Volume	Capacity	Ratio	Volume	Volume	Capacity	Ratio	Volume	Volume	Capacity	Ratio	Volume	Volume	Capacity	Ratio	Volume	Volume	Capacity	Ratio
Nb Left	280	2880	0.097	0	280	2880	0.097	0	280	2880	0.097	71	351	2880	0.122	0	351	2880	0.122	0	351	2880	0.122
Nb Thru	1178	4800	0.268 *	47	1225	4800	0.278 *	0	1225	4800	0.278 *	146	1324	4800	0.301 *	47	1371	4800	0.311 *	0	1371	4800	0.311 *
Nb Right	110	0	-	0	110	0	-	0	110	0	-	13	123	0	-	0	123	0	-	0	123	0	-
Sb Left	528	2880	0.183 *	56	584	2880	0.203 *	0	584	2880	0.203 *	65	593	2880	0.206 *	56	649	2880	0.225 *	0	649	2880	0.225 *
Sb Thru	1101	4800	0.271	44	1145	4800	0.285	0	1145	4800	0.285	136	1237	4800	0.312	44	1281	4800	0.326	0	1281	4800	0.326
Sb Right	202	0	-	22	224	0	-	0	224	0	-	58	260	0	-	22	282	0	-	0	282	0	-
Eb Left	329	1600	0.206	25	354	1600	0.221 *	0	354	1600	0.221 *	72	401	1600	0.251	25	426	1600	0.266 *	0	426	1600	0.266 *
Eb Thru	641	3200	0.219 *	0	641	3200	0.219	0	641	3200	0.219	136	777	3200	0.275 *	0	777	3200	0.275	0	777	3200	0.275
Eb Right	60	0	-	0	60	0	-	0	60	0	-	43	103	0	-	0	103	0	-	0	103	0	-
Wb Left	236	1600	0.148 *	0	236	1600	0.148	0	236	1600	0.148	27	263	1600	0.164 *	0	263	1600	0.164	0	263	1600	0.164
Wb Thru	467	3200	0.146	0	467	3200	0.146 *	0	467	3200	0.146 *	120	587	3200	0.183	0	587	3200	0.183 *	0	587	3200	0.183 *
Wb Right [3	400	1600	0.067	61	461	1600	0.085	0	461	1600	0.085	51	451	1600	0.076	61	512	1600	0.095	0	512	1600	0.095
Yellow Allowance:			0.100 *				0.100 *				0.100 *				0.100 *				0.100 *				0.100 *
ICU			0.918				0.948				0.898				1.046				1.086				1.036
LOS			E				E				D				F				F				F

** Key conflicting movement as a part of ICU*
1 Counts conducted by: City Traffic Counters
2 Capacity expressed in veh/hour of green
3 The westbound right-turn lane has an overlapping phase with the southbound left-turn phase.

Intersection	
Intersection Delay, s/veh	41.9
Intersection LOS	E

Movement	EBU	EBL	EBT	EBR	WBU	WBL	WBT	WBR	NBU	NBL	NBT	NBR
Vol, veh/h	0	10	11	12	0	106	34	18	0	54	77	95
Peak Hour Factor	0.89	0.89	0.89	0.89	0.89	0.89	0.89	0.89	0.89	0.89	0.89	0.89
Heavy Vehicles, %	2	2	2	2	2	2	2	2	2	2	2	2
Mvmt Flow	0	11	12	13	0	119	38	20	0	61	87	107
Number of Lanes	0	0	1	0	0	0	1	1	0	0	1	0

Approach	EB	WB	NB
Opposing Approach	WB	EB	SB
Opposing Lanes	2	1	1
Conflicting Approach Left	SB	NB	EB
Conflicting Lanes Left	1	1	1
Conflicting Approach Right	NB	SB	WB
Conflicting Lanes Right	1	1	2
HCM Control Delay	10.3	13	11.8
HCM LOS	B	B	B

Lane	NBLn1	EBLn1	WBLn1	WBLn2	SBLn1
Vol Left, %	24%	30%	76%	0%	51%
Vol Thru, %	34%	33%	24%	0%	29%
Vol Right, %	42%	36%	0%	100%	20%
Sign Control	Stop	Stop	Stop	Stop	Stop
Traffic Vol by Lane	226	33	140	18	880
LT Vol	77	11	34	0	255
Through Vol	95	12	0	18	179
RT Vol	54	10	106	0	446
Lane Flow Rate	254	37	157	20	989
Geometry Grp	2	5	7	7	2
Degree of Util (X)	0.383	0.069	0.32	0.035	1
Departure Headway (Hd)	5.434	6.737	7.314	6.236	5.015
Convergence, Y/N	Yes	Yes	Yes	Yes	Yes
Cap	660	528	491	572	722
Service Time	3.483	4.825	5.07	3.993	3.097
HCM Lane V/C Ratio	0.385	0.07	0.32	0.035	1.37
HCM Control Delay	11.8	10.3	13.5	9.2	56
HCM Lane LOS	B	B	B	A	F
HCM 95th-tile Q	1.8	0.2	1.4	0.1	16.3

Intersection	
Intersection Delay, s/veh	
Intersection LOS	

Movement	SBU	SBL	SBT	SBR
Vol, veh/h	0	446	255	179
Peak Hour Factor	0.89	0.89	0.89	0.89
Heavy Vehicles, %	2	2	2	2
Mvmt Flow	0	501	287	201
Number of Lanes	0	0	1	0

Approach	SB
Opposing Approach	NB
Opposing Lanes	1
Conflicting Approach Left	WB
Conflicting Lanes Left	2
Conflicting Approach Right	EB
Conflicting Lanes Right	1
HCM Control Delay	56
HCM LOS	F

Lane

Intersection	
Intersection Delay, s/veh	14.5
Intersection LOS	B

Movement	EBU	EBL	EBT	EBR	WBU	WBL	WBT	WBR	NBU	NBL	NBT	NBR
Vol, veh/h	0	83	18	70	0	115	47	76	0	40	314	52
Peak Hour Factor	0.94	0.94	0.94	0.94	0.94	0.94	0.94	0.94	0.94	0.94	0.94	0.94
Heavy Vehicles, %	2	2	2	2	2	2	2	2	2	2	2	2
Mvmt Flow	0	88	19	74	0	122	50	81	0	43	334	55
Number of Lanes	0	0	1	0	0	0	1	1	0	0	1	0

Approach	EB	WB	NB
Opposing Approach	WB	EB	SB
Opposing Lanes	2	1	1
Conflicting Approach Left	SB	NB	EB
Conflicting Lanes Left	1	1	1
Conflicting Approach Right	NB	SB	WB
Conflicting Lanes Right	1	1	2
HCM Control Delay	11.8	11.9	18.3
HCM LOS	B	B	C

Lane	NBLn1	EBLn1	WBLn1	WBLn2	SBLn1
Vol Left, %	10%	49%	71%	0%	50%
Vol Thru, %	77%	11%	29%	0%	35%
Vol Right, %	13%	41%	0%	100%	15%
Sign Control	Stop	Stop	Stop	Stop	Stop
Traffic Vol by Lane	406	171	162	76	138
LT Vol	314	18	47	0	48
Through Vol	52	70	0	76	21
RT Vol	40	83	115	0	69
Lane Flow Rate	432	182	172	81	147
Geometry Grp	2	5	7	7	2
Degree of Util (X)	0.653	0.305	0.328	0.13	0.245
Departure Headway (Hd)	5.444	6.041	6.858	5.783	6.012
Convergence, Y/N	Yes	Yes	Yes	Yes	Yes
Cap	661	591	522	616	593
Service Time	3.503	4.118	4.629	3.554	4.092
HCM Lane V/C Ratio	0.654	0.308	0.33	0.131	0.248
HCM Control Delay	18.3	11.8	13	9.4	11.1
HCM Lane LOS	C	B	B	A	B
HCM 95th-tile Q	4.8	1.3	1.4	0.4	1

HCM 2010 AWSC
10: Aerojet Ave/I-10 EB Ramps & Flair Dr
Existing Conditions
Weekday PM Peak Hour

Intersection	
Intersection Delay, s/veh	
Intersection LOS	

Movement	SBU	SBL	SBT	SBR
Vol, veh/h	0	69	48	21
Peak Hour Factor	0.94	0.94	0.94	0.94
Heavy Vehicles, %	2	2	2	2
Mvmt Flow	0	73	51	22
Number of Lanes	0	0	1	0

Approach	SB
Opposing Approach	NB
Opposing Lanes	1
Conflicting Approach Left	WB
Conflicting Lanes Left	2
Conflicting Approach Right	EB
Conflicting Lanes Right	1
HCM Control Delay	11.1
HCM LOS	B

Lane

Flair Spectrum Project (1-14-4074-1)
LLG Engineers
Synchro 8 Report
8/21/2014

Intersection	
Intersection Delay, s/veh	7.9
Intersection LOS	A

Movement	EBU	EBL	EBT	EBR	WBU	WBL	WBT	WBR	NBU	NBL	NBT	NBR
Vol, veh/h	0	10	14	9	0	32	28	16	0	15	39	18
Peak Hour Factor	0.88	0.88	0.88	0.88	0.88	0.88	0.88	0.88	0.88	0.88	0.88	0.88
Heavy Vehicles, %	2	2	2	2	2	2	2	2	2	2	2	2
Mvmt Flow	0	11	16	10	0	36	32	18	0	17	44	20
Number of Lanes	0	0	1	0	0	0	1	1	0	0	1	0

Approach	EB	WB	NB
Opposing Approach	WB	EB	SB
Opposing Lanes	2	1	1
Conflicting Approach Left	SB	NB	EB
Conflicting Lanes Left	1	1	1
Conflicting Approach Right	NB	SB	WB
Conflicting Lanes Right	1	1	2
HCM Control Delay	7.6	8.2	7.7
HCM LOS	A	A	A

Lane	NBLn1	EBLn1	WBLn1	WBLn2	SBLn1
Vol Left, %	21%	30%	53%	0%	54%
Vol Thru, %	54%	42%	47%	0%	32%
Vol Right, %	25%	27%	0%	100%	14%
Sign Control	Stop	Stop	Stop	Stop	Stop
Traffic Vol by Lane	72	33	60	16	79
LT Vol	39	14	28	0	25
Through Vol	18	9	0	16	11
RT Vol	15	10	32	0	43
Lane Flow Rate	82	38	68	18	90
Geometry Grp	2	5	7	7	2
Degree of Util (X)	0.096	0.046	0.097	0.021	0.109
Departure Headway (Hd)	4.23	4.423	5.23	4.26	4.352
Convergence, Y/N	Yes	Yes	Yes	Yes	Yes
Cap	851	812	689	845	828
Service Time	2.235	2.435	2.93	1.96	2.357
HCM Lane V/C Ratio	0.096	0.047	0.099	0.021	0.109
HCM Control Delay	7.7	7.6	8.5	7.1	7.9
HCM Lane LOS	A	A	A	A	A
HCM 95th-tile Q	0.3	0.1	0.3	0.1	0.4

HCM 2010 AWSC
10: Aerojet Ave/I-10 EB Ramps & Flair Dr
Existing Conditions
Saturday Mid-day Peak Hour

Intersection	
Intersection Delay, s/veh	
Intersection LOS	

Movement	SBU	SBL	SBT	SBR
Vol, veh/h	0	43	25	11
Peak Hour Factor	0.88	0.88	0.88	0.88
Heavy Vehicles, %	2	2	2	2
Mvmt Flow	0	49	28	12
Number of Lanes	0	0	1	0

Approach	SB
Opposing Approach	NB
Opposing Lanes	1
Conflicting Approach Left	WB
Conflicting Lanes Left	2
Conflicting Approach Right	EB
Conflicting Lanes Right	1
HCM Control Delay	7.9
HCM LOS	A

Lane

Flair Spectrum Project (1-14-4074-1)
LLG Engineers
Synchro 8 Report
8/21/2014

Intersection	
Intersection Delay, s/veh	42.9
Intersection LOS	E

Movement	EBU	EBL	EBT	EBR	WBU	WBL	WBT	WBR	NBU	NBL	NBT	NBR
Vol, veh/h	0	10	11	12	0	134	34	56	0	54	77	95
Peak Hour Factor	0.89	0.89	0.89	0.89	0.89	0.89	0.89	0.89	0.89	0.89	0.89	0.89
Heavy Vehicles, %	2	2	2	2	2	2	2	2	2	2	2	2
Mvmt Flow	0	11	12	13	0	151	38	63	0	61	87	107
Number of Lanes	0	0	1	0	0	0	1	1	0	0	1	0

Approach	EB	WB	NB
Opposing Approach	WB	EB	SB
Opposing Lanes	2	1	1
Conflicting Approach Left	SB	NB	EB
Conflicting Lanes Left	1	1	1
Conflicting Approach Right	NB	SB	WB
Conflicting Lanes Right	1	1	2
HCM Control Delay	10.6	13.5	12.6
HCM LOS	B	B	B

Lane	NBLn1	EBLn1	WBLn1	WBLn2	SBLn1
Vol Left, %	24%	30%	80%	0%	56%
Vol Thru, %	34%	33%	20%	0%	26%
Vol Right, %	42%	36%	0%	100%	18%
Sign Control	Stop	Stop	Stop	Stop	Stop
Traffic Vol by Lane	226	33	168	56	984
LT Vol	77	11	34	0	255
Through Vol	95	12	0	56	179
RT Vol	54	10	134	0	550
Lane Flow Rate	254	37	189	63	1106
Geometry Grp	2	5	7	7	2
Degree of Util (X)	0.403	0.072	0.386	0.109	1
Departure Headway (Hd)	5.71	6.962	7.359	6.261	5.302
Convergence, Y/N	Yes	Yes	Yes	Yes	Yes
Cap	630	511	489	570	685
Service Time	3.745	5.052	5.12	4.023	3.377
HCM Lane V/C Ratio	0.403	0.072	0.387	0.111	1.615
HCM Control Delay	12.6	10.6	14.7	9.8	57.6
HCM Lane LOS	B	B	B	A	F
HCM 95th-tile Q	1.9	0.2	1.8	0.4	15.8

HCM 2010 AWSC
10: Aerojet Ave/I-10 EB Ramps & Flair Dr
Existing with Project
Weekday AM Peak Hour

Intersection	
Intersection Delay, s/veh	
Intersection LOS	

Movement	SBU	SBL	SBT	SBR
Vol, veh/h	0	550	255	179
Peak Hour Factor	0.89	0.89	0.89	0.89
Heavy Vehicles, %	2	2	2	2
Mvmt Flow	0	618	287	201
Number of Lanes	0	0	1	0

Approach	SB
Opposing Approach	NB
Opposing Lanes	1
Conflicting Approach Left	WB
Conflicting Lanes Left	2
Conflicting Approach Right	EB
Conflicting Lanes Right	1
HCM Control Delay	57.6
HCM LOS	F

Lane

Flair Spectrum Specific Plan (1-14-4074-1)
LLG Engineers
Synchro 8 Report
9/29/2014

Intersection	
Intersection Delay, s/veh	37.1
Intersection LOS	E

Movement	EBU	EBL	EBT	EBR	WBU	WBL	WBT	WBR	NBU	NBL	NBT	NBR
Vol, veh/h	0	83	18	70	0	214	47	172	0	40	314	52
Peak Hour Factor	0.94	0.94	0.94	0.94	0.94	0.94	0.94	0.94	0.94	0.94	0.94	0.94
Heavy Vehicles, %	2	2	2	2	2	2	2	2	2	2	2	2
Mvmt Flow	0	88	19	74	0	228	50	183	0	43	334	55
Number of Lanes	0	0	1	0	0	0	1	1	0	0	1	0

Approach	EB	WB	NB
Opposing Approach	WB	EB	SB
Opposing Lanes	2	1	1
Conflicting Approach Left	SB	NB	EB
Conflicting Lanes Left	1	1	1
Conflicting Approach Right	NB	SB	WB
Conflicting Lanes Right	1	1	2
HCM Control Delay	18.7	22.9	48.4
HCM LOS	C	C	E

Lane	NBLn1	EBLn1	WBLn1	WBLn2	SBLn1
Vol Left, %	10%	49%	82%	0%	83%
Vol Thru, %	77%	11%	18%	0%	12%
Vol Right, %	13%	41%	0%	100%	5%
Sign Control	Stop	Stop	Stop	Stop	Stop
Traffic Vol by Lane	406	171	261	172	395
LT Vol	314	18	47	0	48
Through Vol	52	70	0	172	21
RT Vol	40	83	214	0	326
Lane Flow Rate	432	182	278	183	420
Geometry Grp	2	5	7	7	2
Degree of Util (X)	0.902	0.445	0.674	0.386	0.9
Departure Headway (Hd)	7.617	8.801	8.837	7.586	7.817
Convergence, Y/N	Yes	Yes	Yes	Yes	Yes
Cap	479	411	411	470	466
Service Time	5.617	6.801	6.537	5.386	5.817
HCM Lane V/C Ratio	0.902	0.443	0.676	0.389	0.901
HCM Control Delay	48.4	18.7	28	15.1	48.9
HCM Lane LOS	E	C	D	C	E
HCM 95th-tile Q	10.1	2.2	4.8	1.8	9.9

HCM 2010 AWSC
10: Aerojet Ave/I-10 EB Ramps & Flair Dr
Existing with Project
Weekday PM Peak Hour

Intersection	
Intersection Delay, s/veh	
Intersection LOS	

Movement	SBU	SBL	SBT	SBR
Vol, veh/h	0	326	48	21
Peak Hour Factor	0.94	0.94	0.94	0.94
Heavy Vehicles, %	2	2	2	2
Mvmt Flow	0	347	51	22
Number of Lanes	0	0	1	0

Approach	SB
Opposing Approach	NB
Opposing Lanes	1
Conflicting Approach Left	WB
Conflicting Lanes Left	2
Conflicting Approach Right	EB
Conflicting Lanes Right	1
HCM Control Delay	48.9
HCM LOS	E

Lane

Flair Spectrum Specific Plan (1-14-4074-1)
LLG Engineers
Synchro 8 Report
9/29/2014

Intersection	
Intersection Delay, s/veh	19.6
Intersection LOS	C

Movement	EBU	EBL	EBT	EBR	WBU	WBL	WBT	WBR	NBU	NBL	NBT	NBR
Vol, veh/h	0	10	14	9	0	179	28	159	0	15	39	18
Peak Hour Factor	0.88	0.88	0.88	0.88	0.88	0.88	0.88	0.88	0.88	0.88	0.88	0.88
Heavy Vehicles, %	2	2	2	2	2	2	2	2	2	2	2	2
Mvmt Flow	0	11	16	10	0	203	32	181	0	17	44	20
Number of Lanes	0	0	1	0	0	0	1	1	0	0	1	0

Approach	EB	WB	NB
Opposing Approach	WB	EB	SB
Opposing Lanes	2	1	1
Conflicting Approach Left	SB	NB	EB
Conflicting Lanes Left	1	1	1
Conflicting Approach Right	NB	SB	WB
Conflicting Lanes Right	1	1	2
HCM Control Delay	10	13	10
HCM LOS	A	B	A

Lane	NBLn1	EBLn1	WBLn1	WBLn2	SBLn1
Vol Left, %	21%	30%	86%	0%	92%
Vol Thru, %	54%	42%	14%	0%	5%
Vol Right, %	25%	27%	0%	100%	2%
Sign Control	Stop	Stop	Stop	Stop	Stop
Traffic Vol by Lane	72	33	207	159	462
LT Vol	39	14	28	0	25
Through Vol	18	9	0	159	11
RT Vol	15	10	179	0	426
Lane Flow Rate	82	38	235	181	525
Geometry Grp	2	5	7	7	2
Degree of Util (X)	0.136	0.067	0.443	0.283	0.802
Departure Headway (Hd)	5.978	6.448	6.786	5.634	5.498
Convergence, Y/N	Yes	Yes	Yes	Yes	Yes
Cap	598	553	532	636	656
Service Time	4.034	4.516	4.53	3.379	3.532
HCM Lane V/C Ratio	0.137	0.069	0.442	0.285	0.8
HCM Control Delay	10	10	14.8	10.6	27.1
HCM Lane LOS	A	A	B	B	D
HCM 95th-tile Q	0.5	0.2	2.2	1.2	8.1

Intersection	
Intersection Delay, s/veh	
Intersection LOS	

Movement	SBU	SBL	SBT	SBR
Vol, veh/h	0	426	25	11
Peak Hour Factor	0.88	0.88	0.88	0.88
Heavy Vehicles, %	2	2	2	2
Mvmt Flow	0	484	28	12
Number of Lanes	0	0	1	0

Approach	SB
Opposing Approach	NB
Opposing Lanes	1
Conflicting Approach Left	WB
Conflicting Lanes Left	2
Conflicting Approach Right	EB
Conflicting Lanes Right	1
HCM Control Delay	27.1
HCM LOS	D

Lane

Intersection	
Intersection Delay, s/veh	42.3
Intersection LOS	E

Movement	EBU	EBL	EBT	EBR	WBU	WBL	WBT	WBR	NBU	NBL	NBT	NBR
Vol, veh/h	0	10	11	12	0	108	35	18	0	55	78	97
Peak Hour Factor	0.89	0.89	0.89	0.89	0.89	0.89	0.89	0.89	0.89	0.89	0.89	0.89
Heavy Vehicles, %	2	2	2	2	2	2	2	2	2	2	2	2
Mvmt Flow	0	11	12	13	0	121	39	20	0	62	88	109
Number of Lanes	0	0	1	0	0	0	1	1	0	0	1	0

Approach	EB	WB	NB
Opposing Approach	WB	EB	SB
Opposing Lanes	2	1	1
Conflicting Approach Left	SB	NB	EB
Conflicting Lanes Left	1	1	1
Conflicting Approach Right	NB	SB	WB
Conflicting Lanes Right	1	1	2
HCM Control Delay	10.4	13.1	12
HCM LOS	B	B	B

Lane	NBLn1	EBLn1	WBLn1	WBLn2	SBLn1
Vol Left, %	24%	30%	76%	0%	49%
Vol Thru, %	34%	33%	24%	0%	31%
Vol Right, %	42%	36%	0%	100%	20%
Sign Control	Stop	Stop	Stop	Stop	Stop
Traffic Vol by Lane	230	33	143	18	925
LT Vol	78	11	35	0	290
Through Vol	97	12	0	18	182
RT Vol	55	10	108	0	453
Lane Flow Rate	258	37	161	20	1039
Geometry Grp	2	5	7	7	2
Degree of Util (X)	0.392	0.07	0.327	0.035	1
Departure Headway (Hd)	5.462	6.771	7.326	6.249	5.051
Convergence, Y/N	Yes	Yes	Yes	Yes	Yes
Cap	659	526	490	571	717
Service Time	3.5	4.852	5.082	4.006	3.123
HCM Lane V/C Ratio	0.392	0.07	0.329	0.035	1.449
HCM Control Delay	12	10.4	13.6	9.2	56.1
HCM Lane LOS	B	B	B	A	F
HCM 95th-tile Q	1.9	0.2	1.4	0.1	16.2

HCM 2010 AWSC
10: Aerojet Ave/I-10 EB Ramps & Flair Dr
2016 Future Pre-Project
Weekday AM Peak Hour

Intersection	
Intersection Delay, s/veh	
Intersection LOS	

Movement	SBU	SBL	SBT	SBR
Vol, veh/h	0	453	290	182
Peak Hour Factor	0.89	0.89	0.89	0.89
Heavy Vehicles, %	2	2	2	2
Mvmt Flow	0	509	326	204
Number of Lanes	0	0	1	0

Approach	SB
Opposing Approach	NB
Opposing Lanes	1
Conflicting Approach Left	WB
Conflicting Lanes Left	2
Conflicting Approach Right	EB
Conflicting Lanes Right	1
HCM Control Delay	56.1
HCM LOS	F

Lane

Flair Spectrum Specific Plan (1-14-4074-1)
LLG Engineers
Synchro 8 Report
9/23/2014

Intersection	
Intersection Delay, s/veh	15.1
Intersection LOS	C

Movement	EBU	EBL	EBT	EBR	WBU	WBL	WBT	WBR	NBU	NBL	NBT	NBR
Vol, veh/h	0	84	18	71	0	117	48	77	0	41	319	53
Peak Hour Factor	0.94	0.94	0.94	0.94	0.94	0.94	0.94	0.94	0.94	0.94	0.94	0.94
Heavy Vehicles, %	2	2	2	2	2	2	2	2	2	2	2	2
Mvmt Flow	0	89	19	76	0	124	51	82	0	44	339	56
Number of Lanes	0	0	1	0	0	0	1	1	0	0	1	0

Approach	EB	WB	NB
Opposing Approach	WB	EB	SB
Opposing Lanes	2	1	1
Conflicting Approach Left	SB	NB	EB
Conflicting Lanes Left	1	1	1
Conflicting Approach Right	NB	SB	WB
Conflicting Lanes Right	1	1	2
HCM Control Delay	12.1	12.2	19.5
HCM LOS	B	B	C

Lane	NBLn1	EBLn1	WBLn1	WBLn2	SBLn1
Vol Left, %	10%	49%	71%	0%	43%
Vol Thru, %	77%	10%	29%	0%	43%
Vol Right, %	13%	41%	0%	100%	13%
Sign Control	Stop	Stop	Stop	Stop	Stop
Traffic Vol by Lane	413	173	165	77	161
LT Vol	319	18	48	0	70
Through Vol	53	71	0	77	21
RT Vol	41	84	117	0	70
Lane Flow Rate	439	184	176	82	171
Geometry Grp	2	5	7	7	2
Degree of Util (X)	0.676	0.316	0.34	0.134	0.289
Departure Headway (Hd)	5.537	6.177	6.98	5.905	6.083
Convergence, Y/N	Yes	Yes	Yes	Yes	Yes
Cap	650	576	513	602	586
Service Time	3.606	4.27	4.768	3.691	4.176
HCM Lane V/C Ratio	0.675	0.319	0.343	0.136	0.292
HCM Control Delay	19.5	12.1	13.4	9.6	11.7
HCM Lane LOS	C	B	B	A	B
HCM 95th-tile Q	5.2	1.3	1.5	0.5	1.2

HCM 2010 AWSC
10: Aerojet Ave/I-10 EB Ramps & Flair Dr
2016 Future Pre-Project
Weekday PM Peak Hour

Intersection	
Intersection Delay, s/veh	
Intersection LOS	

Movement	SBU	SBL	SBT	SBR
Vol, veh/h	0	70	70	21
Peak Hour Factor	0.94	0.94	0.94	0.94
Heavy Vehicles, %	2	2	2	2
Mvmt Flow	0	74	74	22
Number of Lanes	0	0	1	0

Approach	SB
Opposing Approach	NB
Opposing Lanes	1
Conflicting Approach Left	WB
Conflicting Lanes Left	2
Conflicting Approach Right	EB
Conflicting Lanes Right	1
HCM Control Delay	11.7
HCM LOS	B

Lane

Flair Spectrum Specific Plan (1-14-4074-1)
LLG Engineers
Synchro 8 Report
9/23/2014

Intersection	
Intersection Delay, s/veh	8
Intersection LOS	A

Movement	EBU	EBL	EBT	EBR	WBU	WBL	WBT	WBR	NBU	NBL	NBT	NBR
Vol, veh/h	0	10	14	9	0	33	28	16	0	15	40	18
Peak Hour Factor	0.88	0.88	0.88	0.88	0.88	0.88	0.88	0.88	0.88	0.88	0.88	0.88
Heavy Vehicles, %	2	2	2	2	2	2	2	2	2	2	2	2
Mvmt Flow	0	11	16	10	0	37	32	18	0	17	45	20
Number of Lanes	0	0	1	0	0	0	1	1	0	0	1	0

Approach	EB	WB	NB
Opposing Approach	WB	EB	SB
Opposing Lanes	2	1	1
Conflicting Approach Left	SB	NB	EB
Conflicting Lanes Left	1	1	1
Conflicting Approach Right	NB	SB	WB
Conflicting Lanes Right	1	1	2
HCM Control Delay	7.7	8.3	7.7
HCM LOS	A	A	A

Lane	NBLn1	EBLn1	WBLn1	WBLn2	SBLn1
Vol Left, %	21%	30%	54%	0%	48%
Vol Thru, %	55%	42%	46%	0%	40%
Vol Right, %	25%	27%	0%	100%	12%
Sign Control	Stop	Stop	Stop	Stop	Stop
Traffic Vol by Lane	73	33	61	16	91
LT Vol	40	14	28	0	36
Through Vol	18	9	0	16	11
RT Vol	15	10	33	0	44
Lane Flow Rate	83	38	69	18	103
Geometry Grp	2	5	7	7	2
Degree of Util (X)	0.098	0.046	0.101	0.022	0.125
Departure Headway (Hd)	4.25	4.461	5.257	4.282	4.357
Convergence, Y/N	Yes	Yes	Yes	Yes	Yes
Cap	846	805	684	839	826
Service Time	2.26	2.475	2.969	1.994	2.367
HCM Lane V/C Ratio	0.098	0.047	0.101	0.021	0.125
HCM Control Delay	7.7	7.7	8.6	7.1	8
HCM Lane LOS	A	A	A	A	A
HCM 95th-tile Q	0.3	0.1	0.3	0.1	0.4

HCM 2010 AWSC
10: Aerojet Ave/I-10 EB Ramps & Flair Dr
2016 Future Pre-Project
Saturday Mid-day Peak Hour

Intersection	
Intersection Delay, s/veh	
Intersection LOS	

Movement	SBU	SBL	SBT	SBR
Vol, veh/h	0	44	36	11
Peak Hour Factor	0.88	0.88	0.88	0.88
Heavy Vehicles, %	2	2	2	2
Mvmt Flow	0	50	41	12
Number of Lanes	0	0	1	0

Approach	SB
Opposing Approach	NB
Opposing Lanes	1
Conflicting Approach Left	WB
Conflicting Lanes Left	2
Conflicting Approach Right	EB
Conflicting Lanes Right	1
HCM Control Delay	8
HCM LOS	A

Lane

Flair Spectrum Specific Plan (1-14-4074-1)
LLG Engineers
Synchro 8 Report
9/23/2014

Intersection	
Intersection Delay, s/veh	43.4
Intersection LOS	E

Movement	EBU	EBL	EBT	EBR	WBU	WBL	WBT	WBR	NBU	NBL	NBT	NBR
Vol, veh/h	0	10	11	12	0	136	35	37	0	55	78	97
Peak Hour Factor	0.89	0.89	0.89	0.89	0.89	0.89	0.89	0.89	0.89	0.89	0.89	0.89
Heavy Vehicles, %	2	2	2	2	2	2	2	2	2	2	2	2
Mvmt Flow	0	11	12	13	0	153	39	42	0	62	88	109
Number of Lanes	0	0	1	0	0	0	1	1	0	0	1	0

Approach	EB	WB	NB
Opposing Approach	WB	EB	SB
Opposing Lanes	2	1	1
Conflicting Approach Left	SB	NB	EB
Conflicting Lanes Left	1	1	1
Conflicting Approach Right	NB	SB	WB
Conflicting Lanes Right	1	1	2
HCM Control Delay	10.6	13.9	12.5
HCM LOS	B	B	B

Lane	NBLn1	EBLn1	WBLn1	WBLn2	SBLn1
Vol Left, %	24%	30%	80%	0%	54%
Vol Thru, %	34%	33%	20%	0%	28%
Vol Right, %	42%	36%	0%	100%	18%
Sign Control	Stop	Stop	Stop	Stop	Stop
Traffic Vol by Lane	230	33	171	37	1021
LT Vol	78	11	35	0	290
Through Vol	97	12	0	37	182
RT Vol	55	10	136	0	549
Lane Flow Rate	258	37	192	42	1147
Geometry Grp	2	5	7	7	2
Degree of Util (X)	0.406	0.071	0.393	0.072	1
Departure Headway (Hd)	5.66	6.931	7.359	6.262	5.258
Convergence, Y/N	Yes	Yes	Yes	Yes	Yes
Cap	636	513	488	570	688
Service Time	3.704	5.029	5.121	4.025	3.342
HCM Lane V/C Ratio	0.406	0.072	0.393	0.074	1.667
HCM Control Delay	12.5	10.6	14.8	9.5	57.4
HCM Lane LOS	B	B	B	A	F
HCM 95th-tile Q	2	0.2	1.8	0.2	15.9

HCM 2010 AWSC
10: Aerojet Ave/I-10 EB Ramps & Flair Dr
2016 Future with Project
Weekday AM Peak Hour

Intersection	
Intersection Delay, s/veh	
Intersection LOS	

Movement	SBU	SBL	SBT	SBR
Vol, veh/h	0	549	290	182
Peak Hour Factor	0.89	0.89	0.89	0.89
Heavy Vehicles, %	2	2	2	2
Mvmt Flow	0	617	326	204
Number of Lanes	0	0	1	0

Approach	SB
Opposing Approach	NB
Opposing Lanes	1
Conflicting Approach Left	WB
Conflicting Lanes Left	2
Conflicting Approach Right	EB
Conflicting Lanes Right	1
HCM Control Delay	57.4
HCM LOS	F

Lane

Flair Spectrum Specific Plan (1-14-4074-1)
LLG Engineers
Synchro 8 Report
9/23/2014

Intersection	
Intersection Delay, s/veh	36.1
Intersection LOS	E

Movement	EBU	EBL	EBT	EBR	WBU	WBL	WBT	WBR	NBU	NBL	NBT	NBR
Vol, veh/h	0	84	18	71	0	216	48	164	0	41	319	53
Peak Hour Factor	0.94	0.94	0.94	0.94	0.94	0.94	0.94	0.94	0.94	0.94	0.94	0.94
Heavy Vehicles, %	2	2	2	2	2	2	2	2	2	2	2	2
Mvmt Flow	0	89	19	76	0	230	51	174	0	44	339	56
Number of Lanes	0	0	1	0	0	0	1	1	0	0	1	0

Approach	EB	WB	NB
Opposing Approach	WB	EB	SB
Opposing Lanes	2	1	1
Conflicting Approach Left	SB	NB	EB
Conflicting Lanes Left	1	1	1
Conflicting Approach Right	NB	SB	WB
Conflicting Lanes Right	1	1	2
HCM Control Delay	18.6	23	49.7
HCM LOS	C	C	E

Lane	NBLn1	EBLn1	WBLn1	WBLn2	SBLn1
Vol Left, %	10%	49%	82%	0%	76%
Vol Thru, %	77%	10%	18%	0%	18%
Vol Right, %	13%	41%	0%	100%	5%
Sign Control	Stop	Stop	Stop	Stop	Stop
Traffic Vol by Lane	413	173	264	164	382
LT Vol	319	18	48	0	70
Through Vol	53	71	0	164	21
RT Vol	41	84	216	0	291
Lane Flow Rate	439	184	281	174	406
Geometry Grp	2	5	7	7	2
Degree of Util (X)	0.911	0.447	0.679	0.366	0.87
Departure Headway (Hd)	7.463	8.742	8.803	7.555	7.815
Convergence, Y/N	Yes	Yes	Yes	Yes	Yes
Cap	483	414	413	473	467
Service Time	5.561	6.742	6.503	5.354	5.815
HCM Lane V/C Ratio	0.909	0.444	0.68	0.368	0.869
HCM Control Delay	49.7	18.6	28.2	14.7	44.1
HCM Lane LOS	E	C	D	B	E
HCM 95th-tile Q	10.4	2.2	4.9	1.7	9.1

HCM 2010 AWSC
10: Aerojet Ave/I-10 EB Ramps & Flair Dr
2016 with Project
Weekday PM Peak Hour

Intersection	
Intersection Delay, s/veh	
Intersection LOS	

Movement	SBU	SBL	SBT	SBR
Vol, veh/h	0	291	70	21
Peak Hour Factor	0.94	0.94	0.94	0.94
Heavy Vehicles, %	2	2	2	2
Mvmt Flow	0	310	74	22
Number of Lanes	0	0	1	0

Approach	SB
Opposing Approach	NB
Opposing Lanes	1
Conflicting Approach Left	WB
Conflicting Lanes Left	2
Conflicting Approach Right	EB
Conflicting Lanes Right	1
HCM Control Delay	44.1
HCM LOS	E

Lane

Flair Spectrum Specific Plan (1-14-4074-1)
LLG Engineers
Synchro 8 Report
9/23/2014

Intersection	
Intersection Delay, s/veh	18.4
Intersection LOS	C

Movement	EBU	EBL	EBT	EBR	WBU	WBL	WBT	WBR	NBU	NBL	NBT	NBR
Vol, veh/h	0	10	14	9	0	180	28	148	0	15	40	18
Peak Hour Factor	0.88	0.88	0.88	0.88	0.88	0.88	0.88	0.88	0.88	0.88	0.88	0.88
Heavy Vehicles, %	2	2	2	2	2	2	2	2	2	2	2	2
Mvmt Flow	0	11	16	10	0	205	32	168	0	17	45	20
Number of Lanes	0	0	1	0	0	0	1	1	0	0	1	0

Approach	EB	WB	NB
Opposing Approach	WB	EB	SB
Opposing Lanes	2	1	1
Conflicting Approach Left	SB	NB	EB
Conflicting Lanes Left	1	1	1
Conflicting Approach Right	NB	SB	WB
Conflicting Lanes Right	1	1	2
HCM Control Delay	9.9	12.9	9.9
HCM LOS	A	B	A

Lane	NBLn1	EBLn1	WBLn1	WBLn2	SBLn1
Vol Left, %	21%	30%	87%	0%	90%
Vol Thru, %	55%	42%	13%	0%	8%
Vol Right, %	25%	27%	0%	100%	2%
Sign Control	Stop	Stop	Stop	Stop	Stop
Traffic Vol by Lane	73	33	208	148	448
LT Vol	40	14	28	0	36
Through Vol	18	9	0	148	11
RT Vol	15	10	180	0	401
Lane Flow Rate	83	38	236	168	509
Geometry Grp	2	5	7	7	2
Degree of Util (X)	0.136	0.066	0.442	0.261	0.773
Departure Headway (Hd)	5.915	6.371	6.732	5.581	5.466
Convergence, Y/N	Yes	Yes	Yes	Yes	Yes
Cap	605	560	534	642	662
Service Time	3.969	4.434	4.473	3.322	3.499
HCM Lane V/C Ratio	0.137	0.068	0.442	0.262	0.769
HCM Control Delay	9.9	9.9	14.7	10.3	24.7
HCM Lane LOS	A	A	B	B	C
HCM 95th-tile Q	0.5	0.2	2.2	1	7.3

HCM 2010 AWSC
10: Aerojet Ave/I-10 EB Ramps & Flair Dr
2016 with Project
Saturday Mid-day Peak Hour

Intersection	
Intersection Delay, s/veh	
Intersection LOS	

Movement	SBU	SBL	SBT	SBR
Vol, veh/h	0	401	36	11
Peak Hour Factor	0.88	0.88	0.88	0.88
Heavy Vehicles, %	2	2	2	2
Mvmt Flow	0	456	41	12
Number of Lanes	0	0	1	0

Approach	SB
Opposing Approach	NB
Opposing Lanes	1
Conflicting Approach Left	WB
Conflicting Lanes Left	2
Conflicting Approach Right	EB
Conflicting Lanes Right	1
HCM Control Delay	24.7
HCM LOS	C

Lane

Flair Spectrum Specific Plan (1-14-4074-1)
LLG Engineers
Synchro 8 Report
9/23/2014

Intersection	
Intersection Delay, s/veh	42.5
Intersection LOS	E

Movement	EBU	EBL	EBT	EBR	WBU	WBL	WBT	WBR	NBU	NBL	NBT	NBR
Vol, veh/h	0	10	11	13	0	110	35	19	0	56	80	99
Peak Hour Factor	0.89	0.89	0.89	0.89	0.89	0.89	0.89	0.89	0.89	0.89	0.89	0.89
Heavy Vehicles, %	2	2	2	2	2	2	2	2	2	2	2	2
Mvmt Flow	0	11	12	15	0	124	39	21	0	63	90	111
Number of Lanes	0	0	1	0	0	0	1	1	0	0	1	0

Approach	EB	WB	NB
Opposing Approach	WB	EB	SB
Opposing Lanes	2	1	1
Conflicting Approach Left	SB	NB	EB
Conflicting Lanes Left	1	1	1
Conflicting Approach Right	NB	SB	WB
Conflicting Lanes Right	1	1	2
HCM Control Delay	10.4	13.2	12.2
HCM LOS	B	B	B

Lane	NBLn1	EBLn1	WBLn1	WBLn2	SBLn1
Vol Left, %	24%	29%	76%	0%	49%
Vol Thru, %	34%	32%	24%	0%	31%
Vol Right, %	42%	38%	0%	100%	20%
Sign Control	Stop	Stop	Stop	Stop	Stop
Traffic Vol by Lane	235	34	145	19	948
LT Vol	80	11	35	0	297
Through Vol	99	13	0	19	186
RT Vol	56	10	110	0	465
Lane Flow Rate	264	38	163	21	1065
Geometry Grp	2	5	7	7	2
Degree of Util (X)	0.402	0.072	0.332	0.037	1
Departure Headway (Hd)	5.486	6.788	7.345	6.267	5.083
Convergence, Y/N	Yes	Yes	Yes	Yes	Yes
Cap	655	525	489	570	714
Service Time	3.52	4.867	5.1	4.022	3.151
HCM Lane V/C Ratio	0.403	0.072	0.333	0.037	1.492
HCM Control Delay	12.2	10.4	13.7	9.3	56.3
HCM Lane LOS	B	B	B	A	F
HCM 95th-tile Q	1.9	0.2	1.4	0.1	16.2

Intersection	
Intersection Delay, s/veh	
Intersection LOS	

Movement	SBU	SBL	SBT	SBR
Vol, veh/h	0	465	297	186
Peak Hour Factor	0.89	0.89	0.89	0.89
Heavy Vehicles, %	2	2	2	2
Mvmt Flow	0	522	334	209
Number of Lanes	0	0	1	0

Approach	SB
Opposing Approach	NB
Opposing Lanes	1
Conflicting Approach Left	WB
Conflicting Lanes Left	2
Conflicting Approach Right	EB
Conflicting Lanes Right	1
HCM Control Delay	56.3
HCM LOS	F

Lane

Intersection	
Intersection Delay, s/veh	15.9
Intersection LOS	C

Movement	EBU	EBL	EBT	EBR	WBU	WBL	WBT	WBR	NBU	NBL	NBT	NBR
Vol, veh/h	0	86	19	73	0	120	49	79	0	42	327	54
Peak Hour Factor	0.94	0.94	0.94	0.94	0.94	0.94	0.94	0.94	0.94	0.94	0.94	0.94
Heavy Vehicles, %	2	2	2	2	2	2	2	2	2	2	2	2
Mvmt Flow	0	91	20	78	0	128	52	84	0	45	348	57
Number of Lanes	0	0	1	0	0	0	1	1	0	0	1	0

Approach	EB	WB	NB
Opposing Approach	WB	EB	SB
Opposing Lanes	2	1	1
Conflicting Approach Left	SB	NB	EB
Conflicting Lanes Left	1	1	1
Conflicting Approach Right	NB	SB	WB
Conflicting Lanes Right	1	1	2
HCM Control Delay	12.6	12.5	20.9
HCM LOS	B	B	C

Lane	NBLn1	EBLn1	WBLn1	WBLn2	SBLn1
Vol Left, %	10%	48%	71%	0%	44%
Vol Thru, %	77%	11%	29%	0%	43%
Vol Right, %	13%	41%	0%	100%	13%
Sign Control	Stop	Stop	Stop	Stop	Stop
Traffic Vol by Lane	423	178	169	79	165
LT Vol	327	19	49	0	71
Through Vol	54	73	0	79	22
RT Vol	42	86	120	0	72
Lane Flow Rate	450	189	180	84	176
Geometry Grp	2	5	7	7	2
Degree of Util (X)	0.7	0.335	0.352	0.14	0.306
Departure Headway (Hd)	5.597	6.364	7.172	6.094	6.267
Convergence, Y/N	Yes	Yes	Yes	Yes	Yes
Cap	639	568	505	592	576
Service Time	3.693	4.374	4.872	3.794	4.281
HCM Lane V/C Ratio	0.704	0.333	0.356	0.142	0.306
HCM Control Delay	20.9	12.6	13.7	9.8	12
HCM Lane LOS	C	B	B	A	B
HCM 95th-tile Q	5.7	1.5	1.6	0.5	1.3

HCM 2010 AWSC
10: Aerojet Ave/I-10 EB Ramps & Flair Dr
2019 Future Pre-Project
Weekday PM Peak Hour

Intersection	
Intersection Delay, s/veh	
Intersection LOS	

Movement	SBU	SBL	SBT	SBR
Vol, veh/h	0	72	71	22
Peak Hour Factor	0.94	0.94	0.94	0.94
Heavy Vehicles, %	2	2	2	2
Mvmt Flow	0	77	76	23
Number of Lanes	0	0	1	0

Approach	SB
Opposing Approach	NB
Opposing Lanes	1
Conflicting Approach Left	WB
Conflicting Lanes Left	2
Conflicting Approach Right	EB
Conflicting Lanes Right	1
HCM Control Delay	12
HCM LOS	B

Lane

Flair Spectrum Specific Plan (1-14-4074-1)
LLG Engineers
Synchro 8 Report
9/23/2014

Intersection	
Intersection Delay, s/veh	8
Intersection LOS	A

Movement	EBU	EBL	EBT	EBR	WBU	WBL	WBT	WBR	NBU	NBL	NBT	NBR
Vol, veh/h	0	10	15	9	0	33	29	17	0	16	41	19
Peak Hour Factor	0.88	0.88	0.88	0.88	0.88	0.88	0.88	0.88	0.88	0.88	0.88	0.88
Heavy Vehicles, %	2	2	2	2	2	2	2	2	2	2	2	2
Mvmt Flow	0	11	17	10	0	37	33	19	0	18	47	22
Number of Lanes	0	0	1	0	0	0	1	1	0	0	1	0

Approach	EB	WB	NB
Opposing Approach	WB	EB	SB
Opposing Lanes	2	1	1
Conflicting Approach Left	SB	NB	EB
Conflicting Lanes Left	1	1	1
Conflicting Approach Right	NB	SB	WB
Conflicting Lanes Right	1	1	2
HCM Control Delay	7.7	8.3	7.8
HCM LOS	A	A	A

Lane	NBLn1	EBLn1	WBLn1	WBLn2	SBLn1
Vol Left, %	21%	29%	53%	0%	48%
Vol Thru, %	54%	44%	47%	0%	40%
Vol Right, %	25%	26%	0%	100%	12%
Sign Control	Stop	Stop	Stop	Stop	Stop
Traffic Vol by Lane	76	34	62	17	93
LT Vol	41	15	29	0	37
Through Vol	19	9	0	17	11
RT Vol	16	10	33	0	45
Lane Flow Rate	86	39	70	19	106
Geometry Grp	2	5	7	7	2
Degree of Util (X)	0.102	0.048	0.103	0.023	0.128
Departure Headway (Hd)	4.261	4.48	5.267	4.297	4.372
Convergence, Y/N	Yes	Yes	Yes	Yes	Yes
Cap	844	801	683	836	823
Service Time	2.271	2.495	2.98	2.009	2.382
HCM Lane V/C Ratio	0.102	0.049	0.102	0.023	0.129
HCM Control Delay	7.8	7.7	8.6	7.1	8
HCM Lane LOS	A	A	A	A	A
HCM 95th-tile Q	0.3	0.2	0.3	0.1	0.4

Intersection	
Intersection Delay, s/veh	
Intersection LOS	

Movement	SBU	SBL	SBT	SBR
Vol, veh/h	0	45	37	11
Peak Hour Factor	0.88	0.88	0.88	0.88
Heavy Vehicles, %	2	2	2	2
Mvmt Flow	0	51	42	12
Number of Lanes	0	0	1	0

Approach	SB
Opposing Approach	NB
Opposing Lanes	1
Conflicting Approach Left	WB
Conflicting Lanes Left	2
Conflicting Approach Right	EB
Conflicting Lanes Right	1
HCM Control Delay	8
HCM LOS	A

Lane

Intersection	
Intersection Delay, s/veh	43.4
Intersection LOS	E

Movement	EBU	EBL	EBT	EBR	WBU	WBL	WBT	WBR	NBU	NBL	NBT	NBR
Vol, veh/h	0	10	11	13	0	138	35	57	0	56	80	99
Peak Hour Factor	0.89	0.89	0.89	0.89	0.89	0.89	0.89	0.89	0.89	0.89	0.89	0.89
Heavy Vehicles, %	2	2	2	2	2	2	2	2	2	2	2	2
Mvmt Flow	0	11	12	15	0	155	39	64	0	63	90	111
Number of Lanes	0	0	1	0	0	0	1	1	0	0	1	0

Approach	EB	WB	NB
Opposing Approach	WB	EB	SB
Opposing Lanes	2	1	1
Conflicting Approach Left	SB	NB	EB
Conflicting Lanes Left	1	1	1
Conflicting Approach Right	NB	SB	WB
Conflicting Lanes Right	1	1	2
HCM Control Delay	10.7	13.7	12.9
HCM LOS	B	B	B

Lane	NBLn1	EBLn1	WBLn1	WBLn2	SBLn1
Vol Left, %	24%	29%	80%	0%	54%
Vol Thru, %	34%	32%	20%	0%	28%
Vol Right, %	42%	38%	0%	100%	18%
Sign Control	Stop	Stop	Stop	Stop	Stop
Traffic Vol by Lane	235	34	173	57	1052
LT Vol	80	11	35	0	297
Through Vol	99	13	0	57	186
RT Vol	56	10	138	0	569
Lane Flow Rate	264	38	194	64	1182
Geometry Grp	2	5	7	7	2
Degree of Util (X)	0.42	0.075	0.398	0.112	1
Departure Headway (Hd)	5.733	7.093	7.378	6.281	5.336
Convergence, Y/N	Yes	Yes	Yes	Yes	Yes
Cap	626	508	486	568	686
Service Time	3.78	5.093	5.147	4.049	3.427
HCM Lane V/C Ratio	0.422	0.075	0.399	0.113	1.723
HCM Control Delay	12.9	10.7	15	9.8	57.8
HCM Lane LOS	B	B	B	A	F
HCM 95th-tile Q	2.1	0.2	1.9	0.4	15.8

HCM 2010 AWSC
10: Aerojet Ave/I-10 EB Ramps & Flair Dr
2019 Future with Project
Weekday AM Peak Hour

Intersection	
Intersection Delay, s/veh	
Intersection LOS	

Movement	SBU	SBL	SBT	SBR
Vol, veh/h	0	569	297	186
Peak Hour Factor	0.89	0.89	0.89	0.89
Heavy Vehicles, %	2	2	2	2
Mvmt Flow	0	639	334	209
Number of Lanes	0	0	1	0

Approach	SB
Opposing Approach	NB
Opposing Lanes	1
Conflicting Approach Left	WB
Conflicting Lanes Left	2
Conflicting Approach Right	EB
Conflicting Lanes Right	1
HCM Control Delay	57.8
HCM LOS	F

Lane

Flair Spectrum Specific Plan (1-14-4074-1)
LLG Engineers
Synchro 8 Report
9/24/2014

Intersection	
Intersection Delay, s/veh	49.8
Intersection LOS	E

Movement	EBU	EBL	EBT	EBR	WBU	WBL	WBT	WBR	NBU	NBL	NBT	NBR
Vol, veh/h	0	86	19	73	0	219	49	175	0	42	327	54
Peak Hour Factor	0.94	0.94	0.94	0.94	0.94	0.94	0.94	0.94	0.94	0.94	0.94	0.94
Heavy Vehicles, %	2	2	2	2	2	2	2	2	2	2	2	2
Mvmt Flow	0	91	20	78	0	233	52	186	0	45	348	57
Number of Lanes	0	0	1	0	0	0	1	1	0	0	1	0

Approach	EB	WB	NB
Opposing Approach	WB	EB	SB
Opposing Lanes	2	1	1
Conflicting Approach Left	SB	NB	EB
Conflicting Lanes Left	1	1	1
Conflicting Approach Right	NB	SB	WB
Conflicting Lanes Right	1	1	2
HCM Control Delay	20.3	25.6	65.8
HCM LOS	C	D	F

Lane	NBLn1	EBLn1	WBLn1	WBLn2	SBLn1
Vol Left, %	10%	48%	82%	0%	78%
Vol Thru, %	77%	11%	18%	0%	17%
Vol Right, %	13%	41%	0%	100%	5%
Sign Control	Stop	Stop	Stop	Stop	Stop
Traffic Vol by Lane	423	178	268	175	422
LT Vol	327	19	49	0	71
Through Vol	54	73	0	175	22
RT Vol	42	86	219	0	329
Lane Flow Rate	450	189	285	186	449
Geometry Grp	2	5	7	7	2
Degree of Util (X)	0.982	0.482	0.721	0.411	1
Departure Headway (Hd)	7.859	9.165	9.102	7.951	8.133
Convergence, Y/N	Yes	Yes	Yes	Yes	Yes
Cap	468	398	402	458	449
Service Time	5.835	7.115	6.728	5.619	6.133
HCM Lane V/C Ratio	0.962	0.475	0.709	0.406	1
HCM Control Delay	65.8	20.3	31.8	16	71.6
HCM Lane LOS	F	C	D	C	F
HCM 95th-tile Q	12.5	2.5	5.5	2	12.9

HCM 2010 AWSC
10: Aerojet Ave/I-10 EB Ramps & Flair Dr
2019 with Project
Weekday PM Peak Hour

Intersection	
Intersection Delay, s/veh	
Intersection LOS	

Movement	SBU	SBL	SBT	SBR
Vol, veh/h	0	329	71	22
Peak Hour Factor	0.94	0.94	0.94	0.94
Heavy Vehicles, %	2	2	2	2
Mvmt Flow	0	350	76	23
Number of Lanes	0	0	1	0

Approach	SB
Opposing Approach	NB
Opposing Lanes	1
Conflicting Approach Left	WB
Conflicting Lanes Left	2
Conflicting Approach Right	EB
Conflicting Lanes Right	1
HCM Control Delay	71.6
HCM LOS	F

Lane

Flair Spectrum Specific Plan (1-14-4074-1)
LLG Engineers
Synchro 8 Report
9/24/2014

Intersection	
Intersection Delay, s/veh	21.2
Intersection LOS	C

Movement	EBU	EBL	EBT	EBR	WBU	WBL	WBT	WBR	NBU	NBL	NBT	NBR
Vol, veh/h	0	10	15	9	0	180	29	160	0	16	41	19
Peak Hour Factor	0.88	0.88	0.88	0.88	0.88	0.88	0.88	0.88	0.88	0.88	0.88	0.88
Heavy Vehicles, %	2	2	2	2	2	2	2	2	2	2	2	2
Mvmt Flow	0	11	17	10	0	205	33	182	0	18	47	22
Number of Lanes	0	0	1	0	0	0	1	1	0	0	1	0

Approach	EB	WB	NB
Opposing Approach	WB	EB	SB
Opposing Lanes	2	1	1
Conflicting Approach Left	SB	NB	EB
Conflicting Lanes Left	1	1	1
Conflicting Approach Right	NB	SB	WB
Conflicting Lanes Right	1	1	2
HCM Control Delay	10.1	13.3	10.1
HCM LOS	B	B	B

Lane	NBLn1	EBLn1	WBLn1	WBLn2	SBLn1
Vol Left, %	21%	29%	86%	0%	90%
Vol Thru, %	54%	44%	14%	0%	8%
Vol Right, %	25%	26%	0%	100%	2%
Sign Control	Stop	Stop	Stop	Stop	Stop
Traffic Vol by Lane	76	34	209	160	476
LT Vol	41	15	29	0	37
Through Vol	19	9	0	160	11
RT Vol	16	10	180	0	428
Lane Flow Rate	86	39	238	182	541
Geometry Grp	2	5	7	7	2
Degree of Util (X)	0.145	0.07	0.452	0.288	0.83
Departure Headway (Hd)	6.034	6.542	6.852	5.702	5.524
Convergence, Y/N	Yes	Yes	Yes	Yes	Yes
Cap	592	545	525	629	655
Service Time	4.095	4.614	4.6	3.449	3.562
HCM Lane V/C Ratio	0.145	0.072	0.453	0.289	0.826
HCM Control Delay	10.1	10.1	15.2	10.8	29.8
HCM Lane LOS	B	B	C	B	D
HCM 95th-tile Q	0.5	0.2	2.3	1.2	8.9

Intersection	
Intersection Delay, s/veh	
Intersection LOS	

Movement	SBU	SBL	SBT	SBR
Vol, veh/h	0	428	37	11
Peak Hour Factor	0.88	0.88	0.88	0.88
Heavy Vehicles, %	2	2	2	2
Mvmt Flow	0	486	42	12
Number of Lanes	0	0	1	0

Approach	SB
Opposing Approach	NB
Opposing Lanes	1
Conflicting Approach Left	WB
Conflicting Lanes Left	2
Conflicting Approach Right	EB
Conflicting Lanes Right	1
HCM Control Delay	29.8
HCM LOS	D

Lane

Intersection	
Intersection Delay, s/veh	43.1
Intersection LOS	E

Movement	EBU	EBL	EBT	EBR	WBU	WBL	WBT	WBR	NBU	NBL	NBT	NBR
Vol, veh/h	0	11	12	13	0	118	38	20	0	60	86	106
Peak Hour Factor	0.89	0.89	0.89	0.89	0.89	0.89	0.89	0.89	0.89	0.89	0.89	0.89
Heavy Vehicles, %	2	2	2	2	2	2	2	2	2	2	2	2
Mvmt Flow	0	12	13	15	0	133	43	22	0	67	97	119
Number of Lanes	0	0	1	0	0	0	1	1	0	0	1	0

Approach	EB	WB	NB
Opposing Approach	WB	EB	SB
Opposing Lanes	2	1	1
Conflicting Approach Left	SB	NB	EB
Conflicting Lanes Left	1	1	1
Conflicting Approach Right	NB	SB	WB
Conflicting Lanes Right	1	1	2
HCM Control Delay	10.6	13.7	12.9
HCM LOS	B	B	B

Lane	NBLn1	EBLn1	WBLn1	WBLn2	SBLn1
Vol Left, %	24%	31%	76%	0%	49%
Vol Thru, %	34%	33%	24%	0%	31%
Vol Right, %	42%	36%	0%	100%	20%
Sign Control	Stop	Stop	Stop	Stop	Stop
Traffic Vol by Lane	252	36	156	20	1012
LT Vol	86	12	38	0	315
Through Vol	106	13	0	20	200
RT Vol	60	11	118	0	497
Lane Flow Rate	283	40	175	22	1137
Geometry Grp	2	5	7	7	2
Degree of Util (X)	0.437	0.077	0.36	0.039	1
Departure Headway (Hd)	5.555	6.896	7.387	6.31	5.173
Convergence, Y/N	Yes	Yes	Yes	Yes	Yes
Cap	648	515	486	565	705
Service Time	3.598	4.993	5.151	4.074	3.257
HCM Lane V/C Ratio	0.437	0.078	0.36	0.039	1.613
HCM Control Delay	12.9	10.6	14.3	9.3	56.9
HCM Lane LOS	B	B	B	A	F
HCM 95th-tile Q	2.2	0.2	1.6	0.1	16

Intersection	
Intersection Delay, s/veh	
Intersection LOS	

Movement	SBU	SBL	SBT	SBR
Vol, veh/h	0	497	315	200
Peak Hour Factor	0.89	0.89	0.89	0.89
Heavy Vehicles, %	2	2	2	2
Mvmt Flow	0	558	354	225
Number of Lanes	0	0	1	0

Approach	SB
Opposing Approach	NB
Opposing Lanes	1
Conflicting Approach Left	WB
Conflicting Lanes Left	2
Conflicting Approach Right	EB
Conflicting Lanes Right	1
HCM Control Delay	56.9
HCM LOS	F

Lane

Intersection	
Intersection Delay, s/veh	19.1
Intersection LOS	C

Movement	EBU	EBL	EBT	EBR	WBU	WBL	WBT	WBR	NBU	NBL	NBT	NBR
Vol, veh/h	0	93	20	78	0	128	52	85	0	45	350	58
Peak Hour Factor	0.94	0.94	0.94	0.94	0.94	0.94	0.94	0.94	0.94	0.94	0.94	0.94
Heavy Vehicles, %	2	2	2	2	2	2	2	2	2	2	2	2
Mvmt Flow	0	99	21	83	0	136	55	90	0	48	372	62
Number of Lanes	0	0	1	0	0	0	1	1	0	0	1	0

Approach	EB	WB	NB
Opposing Approach	WB	EB	SB
Opposing Lanes	2	1	1
Conflicting Approach Left	SB	NB	EB
Conflicting Lanes Left	1	1	1
Conflicting Approach Right	NB	SB	WB
Conflicting Lanes Right	1	1	2
HCM Control Delay	13.7	13.4	27.1
HCM LOS	B	B	D

Lane	NBLn1	EBLn1	WBLn1	WBLn2	SBLn1
Vol Left, %	10%	49%	71%	0%	44%
Vol Thru, %	77%	10%	29%	0%	43%
Vol Right, %	13%	41%	0%	100%	13%
Sign Control	Stop	Stop	Stop	Stop	Stop
Traffic Vol by Lane	453	191	180	85	175
LT Vol	350	20	52	0	75
Through Vol	58	78	0	85	23
RT Vol	45	93	128	0	77
Lane Flow Rate	482	203	191	90	186
Geometry Grp	2	5	7	7	2
Degree of Util (X)	0.785	0.375	0.394	0.159	0.338
Departure Headway (Hd)	5.866	6.638	7.407	6.326	6.545
Convergence, Y/N	Yes	Yes	Yes	Yes	Yes
Cap	617	540	486	566	547
Service Time	3.906	4.692	5.157	4.075	4.6
HCM Lane V/C Ratio	0.781	0.376	0.393	0.159	0.34
HCM Control Delay	27.1	13.7	14.9	10.3	12.9
HCM Lane LOS	D	B	B	B	B
HCM 95th-tile Q	7.5	1.7	1.9	0.6	1.5

Intersection	
Intersection Delay, s/veh	
Intersection LOS	

Movement	SBU	SBL	SBT	SBR
Vol, veh/h	0	77	75	23
Peak Hour Factor	0.94	0.94	0.94	0.94
Heavy Vehicles, %	2	2	2	2
Mvmt Flow	0	82	80	24
Number of Lanes	0	0	1	0

Approach	SB
Opposing Approach	NB
Opposing Lanes	1
Conflicting Approach Left	WB
Conflicting Lanes Left	2
Conflicting Approach Right	EB
Conflicting Lanes Right	1
HCM Control Delay	12.9
HCM LOS	B

Lane

Intersection	
Intersection Delay, s/veh	8.1
Intersection LOS	A

Movement	EBU	EBL	EBT	EBR	WBU	WBL	WBT	WBR	NBU	NBL	NBT	NBR
Vol, veh/h	0	11	16	10	0	36	31	18	0	17	43	20
Peak Hour Factor	0.88	0.88	0.88	0.88	0.88	0.88	0.88	0.88	0.88	0.88	0.88	0.88
Heavy Vehicles, %	2	2	2	2	2	2	2	2	2	2	2	2
Mvmt Flow	0	12	18	11	0	41	35	20	0	19	49	23
Number of Lanes	0	0	1	0	0	0	1	1	0	0	1	0

Approach	EB	WB	NB
Opposing Approach	WB	EB	SB
Opposing Lanes	2	1	1
Conflicting Approach Left	SB	NB	EB
Conflicting Lanes Left	1	1	1
Conflicting Approach Right	NB	SB	WB
Conflicting Lanes Right	1	1	2
HCM Control Delay	7.8	8.4	7.8
HCM LOS	A	A	A

Lane	NBLn1	EBLn1	WBLn1	WBLn2	SBLn1
Vol Left, %	21%	30%	54%	0%	48%
Vol Thru, %	54%	43%	46%	0%	39%
Vol Right, %	25%	27%	0%	100%	12%
Sign Control	Stop	Stop	Stop	Stop	Stop
Traffic Vol by Lane	80	37	67	18	99
LT Vol	43	16	31	0	39
Through Vol	20	10	0	18	12
RT Vol	17	11	36	0	48
Lane Flow Rate	91	42	76	20	112
Geometry Grp	2	5	7	7	2
Degree of Util (X)	0.109	0.053	0.112	0.025	0.138
Departure Headway (Hd)	4.297	4.515	5.3	4.327	4.404
Convergence, Y/N	Yes	Yes	Yes	Yes	Yes
Cap	836	795	678	829	817
Service Time	2.312	2.535	3.019	2.045	2.417
HCM Lane V/C Ratio	0.109	0.053	0.112	0.024	0.137
HCM Control Delay	7.8	7.8	8.7	7.2	8.1
HCM Lane LOS	A	A	A	A	A
HCM 95th-tile Q	0.4	0.2	0.4	0.1	0.5

HCM 2010 AWSC
10: Aerojet Ave/I-10 EB Ramps & Flair Dr
2035 Future Pre-Project
Saturday Mid-day Peak Hour

Intersection	
Intersection Delay, s/veh	
Intersection LOS	

Movement	SBU	SBL	SBT	SBR
Vol, veh/h	0	48	39	12
Peak Hour Factor	0.88	0.88	0.88	0.88
Heavy Vehicles, %	2	2	2	2
Mvmt Flow	0	55	44	14
Number of Lanes	0	0	1	0

Approach	SB
Opposing Approach	NB
Opposing Lanes	1
Conflicting Approach Left	WB
Conflicting Lanes Left	2
Conflicting Approach Right	EB
Conflicting Lanes Right	1
HCM Control Delay	8.1
HCM LOS	A

Lane

Flair Spectrum Specific Plan (1-14-4074-1)
LLG Engineers
Synchro 8 Report
9/24/2014

Intersection	
Intersection Delay, s/veh	44
Intersection LOS	E

Movement	EBU	EBL	EBT	EBR	WBU	WBL	WBT	WBR	NBU	NBL	NBT	NBR
Vol, veh/h	0	11	12	13	0	146	38	58	0	60	86	106
Peak Hour Factor	0.89	0.89	0.89	0.89	0.89	0.89	0.89	0.89	0.89	0.89	0.89	0.89
Heavy Vehicles, %	2	2	2	2	2	2	2	2	2	2	2	2
Mvmt Flow	0	12	13	15	0	164	43	65	0	67	97	119
Number of Lanes	0	0	1	0	0	0	1	1	0	0	1	0

Approach	EB	WB	NB
Opposing Approach	WB	EB	SB
Opposing Lanes	2	1	1
Conflicting Approach Left	SB	NB	EB
Conflicting Lanes Left	1	1	1
Conflicting Approach Right	NB	SB	WB
Conflicting Lanes Right	1	1	2
HCM Control Delay	10.9	14.3	13.7
HCM LOS	B	B	B

Lane	NBLn1	EBLn1	WBLn1	WBLn2	SBLn1
Vol Left, %	24%	31%	79%	0%	54%
Vol Thru, %	34%	33%	21%	0%	28%
Vol Right, %	42%	36%	0%	100%	18%
Sign Control	Stop	Stop	Stop	Stop	Stop
Traffic Vol by Lane	252	36	184	58	1116
LT Vol	86	12	38	0	315
Through Vol	106	13	0	58	200
RT Vol	60	11	146	0	601
Lane Flow Rate	283	40	207	65	1254
Geometry Grp	2	5	7	7	2
Degree of Util (X)	0.456	0.081	0.426	0.114	1
Departure Headway (Hd)	5.8	7.222	7.42	6.324	5.531
Convergence, Y/N	Yes	Yes	Yes	Yes	Yes
Cap	620	499	484	563	665
Service Time	3.856	5.222	5.201	4.105	3.533
HCM Lane V/C Ratio	0.456	0.08	0.428	0.115	1.886
HCM Control Delay	13.7	10.9	15.7	9.9	58.4
HCM Lane LOS	B	B	C	A	F
HCM 95th-tile Q	2.4	0.3	2.1	0.4	15.6

HCM 2010 AWSC
10: Aerojet Ave/I-10 EB Ramps & Flair Dr
2035 Future with Project
Weekday AM Peak Hour

Intersection	
Intersection Delay, s/veh	
Intersection LOS	

Movement	SBU	SBL	SBT	SBR
Vol, veh/h	0	601	315	200
Peak Hour Factor	0.89	0.89	0.89	0.89
Heavy Vehicles, %	2	2	2	2
Mvmt Flow	0	675	354	225
Number of Lanes	0	0	1	0

Approach	SB
Opposing Approach	NB
Opposing Lanes	1
Conflicting Approach Left	WB
Conflicting Lanes Left	2
Conflicting Approach Right	EB
Conflicting Lanes Right	1
HCM Control Delay	58.4
HCM LOS	F

Lane

Flair Spectrum Specific Plan (1-14-4074-1)
LLG Engineers
Synchro 8 Report
9/24/2014

Intersection	
Intersection Delay, s/veh	52
Intersection LOS	F

Movement	EBU	EBL	EBT	EBR	WBU	WBL	WBT	WBR	NBU	NBL	NBT	NBR
Vol, veh/h	0	93	20	78	0	227	52	181	0	45	350	58
Peak Hour Factor	0.94	0.94	0.94	0.94	0.94	0.94	0.94	0.94	0.94	0.94	0.94	0.94
Heavy Vehicles, %	2	2	2	2	2	2	2	2	2	2	2	2
Mvmt Flow	0	99	21	83	0	241	55	193	0	48	372	62
Number of Lanes	0	0	1	0	0	0	1	1	0	0	1	0

Approach	EB	WB	NB
Opposing Approach	WB	EB	SB
Opposing Lanes	2	1	1
Conflicting Approach Left	SB	NB	EB
Conflicting Lanes Left	1	1	1
Conflicting Approach Right	NB	SB	WB
Conflicting Lanes Right	1	1	2
HCM Control Delay	21.6	27.4	70.9
HCM LOS	C	D	F

Lane	NBLn1	EBLn1	WBLn1	WBLn2	SBLn1
Vol Left, %	10%	49%	81%	0%	77%
Vol Thru, %	77%	10%	19%	0%	17%
Vol Right, %	13%	41%	0%	100%	5%
Sign Control	Stop	Stop	Stop	Stop	Stop
Traffic Vol by Lane	453	191	279	181	432
LT Vol	350	20	52	0	75
Through Vol	58	78	0	181	23
RT Vol	45	93	227	0	334
Lane Flow Rate	482	203	297	193	460
Geometry Grp	2	5	7	7	2
Degree of Util (X)	1	0.516	0.748	0.426	1
Departure Headway (Hd)	8.002	9.144	9.067	7.959	8.056
Convergence, Y/N	Yes	Yes	Yes	Yes	Yes
Cap	458	394	398	453	450
Service Time	5.97	7.203	6.822	5.715	6.15
HCM Lane V/C Ratio	1.052	0.515	0.746	0.426	1.022
HCM Control Delay	70.9	21.6	34.4	16.5	71.7
HCM Lane LOS	F	C	D	C	F
HCM 95th-tile Q	13	2.9	6	2.1	12.9

HCM 2010 AWSC
10: Aerojet Ave/I-10 EB Ramps & Flair Dr
2035 Future With Project
Weekday PM Peak Hour

Intersection	
Intersection Delay, s/veh	
Intersection LOS	

Movement	SBU	SBL	SBT	SBR
Vol, veh/h	0	334	75	23
Peak Hour Factor	0.94	0.94	0.94	0.94
Heavy Vehicles, %	2	2	2	2
Mvmt Flow	0	355	80	24
Number of Lanes	0	0	1	0

Approach	SB
Opposing Approach	NB
Opposing Lanes	1
Conflicting Approach Left	WB
Conflicting Lanes Left	2
Conflicting Approach Right	EB
Conflicting Lanes Right	1
HCM Control Delay	71.7
HCM LOS	F

Lane

Flair Spectrum Specific Plan (1-14-4074-1)
LLG Engineers
Synchro 8 Report
9/24/2014

Intersection	
Intersection Delay, s/veh	22.2
Intersection LOS	C

Movement	EBU	EBL	EBT	EBR	WBU	WBL	WBT	WBR	NBU	NBL	NBT	NBR
Vol, veh/h	0	11	16	10	0	183	31	161	0	17	43	20
Peak Hour Factor	0.88	0.88	0.88	0.88	0.88	0.88	0.88	0.88	0.88	0.88	0.88	0.88
Heavy Vehicles, %	2	2	2	2	2	2	2	2	2	2	2	2
Mvmt Flow	0	12	18	11	0	208	35	183	0	19	49	23
Number of Lanes	0	0	1	0	0	0	1	1	0	0	1	0

Approach	EB	WB	NB
Opposing Approach	WB	EB	SB
Opposing Lanes	2	1	1
Conflicting Approach Left	SB	NB	EB
Conflicting Lanes Left	1	1	1
Conflicting Approach Right	NB	SB	WB
Conflicting Lanes Right	1	1	2
HCM Control Delay	10.2	13.6	10.3
HCM LOS	B	B	B

Lane	NBLn1	EBLn1	WBLn1	WBLn2	SBLn1
Vol Left, %	21%	30%	86%	0%	89%
Vol Thru, %	54%	43%	14%	0%	8%
Vol Right, %	25%	27%	0%	100%	2%
Sign Control	Stop	Stop	Stop	Stop	Stop
Traffic Vol by Lane	80	37	214	161	482
LT Vol	43	16	31	0	39
Through Vol	20	10	0	161	12
RT Vol	17	11	183	0	431
Lane Flow Rate	91	42	243	183	548
Geometry Grp	2	5	7	7	2
Degree of Util (X)	0.154	0.077	0.466	0.292	0.847
Departure Headway (Hd)	6.095	6.605	6.898	5.751	5.565
Convergence, Y/N	Yes	Yes	Yes	Yes	Yes
Cap	585	539	520	624	652
Service Time	4.161	4.685	4.652	3.504	3.606
HCM Lane V/C Ratio	0.156	0.078	0.467	0.293	0.84
HCM Control Delay	10.3	10.2	15.6	10.9	31.8
HCM Lane LOS	B	B	C	B	D
HCM 95th-tile Q	0.5	0.2	2.4	1.2	9.4

Intersection	
Intersection Delay, s/veh	
Intersection LOS	

Movement	SBU	SBL	SBT	SBR
Vol, veh/h	0	431	39	12
Peak Hour Factor	0.88	0.88	0.88	0.88
Heavy Vehicles, %	2	2	2	2
Mvmt Flow	0	490	44	14
Number of Lanes	0	0	1	0

Approach	SB
Opposing Approach	NB
Opposing Lanes	1
Conflicting Approach Left	WB
Conflicting Lanes Left	2
Conflicting Approach Right	EB
Conflicting Lanes Right	1
HCM Control Delay	31.8
HCM LOS	D

Lane

Movement	EBL	EBT	EBR	WBL	WBT	WBR	NBL	NBT	NBR	SBL	SBT	SBR
Lane Configurations												
Volume (veh/h)	10	11	12	136	35	37	55	78	97	549	290	182
Number	7	4	14	3	8	18	5	2	12	1	6	16
Initial Q (Qb), veh	0	0	0	0	0	0	0	0	0	0	0	0
Ped-Bike Adj(A_pbT)	0.98		0.95	0.98		0.95	1.00		1.00	1.00		0.98
Parking Bus, Adj	1.00	1.00	1.00	1.00	1.00	1.00	1.00	1.00	1.00	1.00	1.00	1.00
Adj Sat Flow, veh/h/ln	1900	1863	1900	1900	1863	1863	1900	1863	1900	1863	1863	1900
Adj Flow Rate, veh/h	11	12	13	153	39	42	62	88	109	574	387	204
Adj No. of Lanes	0	1	0	0	1	1	0	1	0	1	1	0
Peak Hour Factor	0.89	0.89	0.89	0.89	0.89	0.89	0.89	0.89	0.89	0.89	0.89	0.89
Percent Heavy Veh, %	2	2	2	2	2	2	2	2	2	2	2	2
Cap, veh/h	63	63	36	202	32	1019	68	97	120	781	501	264
Arrive On Green	0.21	0.21	0.21	0.21	0.21	0.21	0.17	0.17	0.17	0.44	0.44	0.44
Sat Flow, veh/h	0	295	167	541	151	1509	411	583	722	1774	1140	601
Grp Volume(v), veh/h	36	0	0	192	0	42	259	0	0	574	0	591
Grp Sat Flow(s),veh/h/ln	462	0	0	692	0	1509	1715	0	0	1774	0	1740
Q Serve(g_s), s	0.0	0.0	0.0	0.0	0.0	0.7	11.1	0.0	0.0	20.1	0.0	21.6
Cycle Q Clear(g_c), s	16.0	0.0	0.0	16.0	0.0	0.7	11.1	0.0	0.0	20.1	0.0	21.6
Prop In Lane	0.31		0.36	0.80		1.00	0.24		0.42	1.00		0.35
Lane Grp Cap(c), veh/h	161	0	0	234	0	1019	286	0	0	781	0	766
V/C Ratio(X)	0.22	0.00	0.00	0.82	0.00	0.04	0.91	0.00	0.00	0.74	0.00	0.77
Avail Cap(c_a), veh/h	161	0	0	234	0	1019	286	0	0	781	0	766
HCM Platoon Ratio	1.00	1.00	1.00	1.00	1.00	1.00	1.00	1.00	1.00	1.00	1.00	1.00
Upstream Filter(I)	1.00	0.00	0.00	1.00	0.00	1.00	1.00	0.00	0.00	1.00	0.00	1.00
Uniform Delay (d), s/veh	24.6	0.0	0.0	31.3	0.0	4.6	30.7	0.0	0.0	17.4	0.0	17.8
Incr Delay (d2), s/veh	0.7	0.0	0.0	20.3	0.0	0.0	30.2	0.0	0.0	6.1	0.0	7.4
Initial Q Delay(d3),s/veh	0.0	0.0	0.0	0.0	0.0	0.0	0.0	0.0	0.0	0.0	0.0	0.0
%ile BackOfQ(95%),veh/ln	1.1	0.0	0.0	9.0	0.0	1.3	12.2	0.0	0.0	16.5	0.0	17.6
LnGrp Delay(d),s/veh	25.3	0.0	0.0	51.6	0.0	4.7	60.9	0.0	0.0	23.5	0.0	25.2
LnGrp LOS	C			D		A	E			C		C
Approach Vol, veh/h		36			234			259			1165	
Approach Delay, s/veh		25.3			43.1			60.9			24.4	
Approach LOS		C			D			E			C	

Timer	1	2	3	4	5	6	7	8
Assigned Phs		2		4		6		8
Phs Duration (G+Y+Rc), s		17.0		20.5		37.5		20.5
Change Period (Y+Rc), s		4.5		4.5		4.5		4.5
Max Green Setting (Gmax), s		12.5		16.0		33.0		16.0
Max Q Clear Time (g_c+I1), s		13.1		18.0		23.6		18.0
Green Ext Time (p_c), s		0.0		0.0		4.3		0.0

Intersection Summary	
HCM 2010 Ctrl Delay	32.6
HCM 2010 LOS	C

Notes

User approved volume balancing among the lanes for turning movement.

Movement	EBL	EBT	EBR	WBL	WBT	WBR	NBL	NBT	NBR	SBL	SBT	SBR
Lane Configurations												
Volume (veh/h)	84	18	71	216	48	164	41	319	53	291	70	21
Number	7	4	14	3	8	18	5	2	12	1	6	16
Initial Q (Qb), veh	0	0	0	0	0	0	0	0	0	0	0	0
Ped-Bike Adj(A_pbT)	1.00		0.97	1.00		0.97	1.00		1.00	1.00		0.96
Parking Bus, Adj	1.00	1.00	1.00	1.00	1.00	1.00	1.00	1.00	1.00	1.00	1.00	1.00
Adj Sat Flow, veh/h/ln	1900	1863	1900	1900	1863	1863	1900	1863	1900	1863	1863	1900
Adj Flow Rate, veh/h	89	19	76	230	51	174	44	339	56	203	224	22
Adj No. of Lanes	0	1	0	0	1	1	0	1	0	1	1	0
Peak Hour Factor	0.94	0.94	0.94	0.94	0.94	0.94	0.94	0.94	0.94	0.94	0.94	0.94
Percent Heavy Veh, %	2	2	2	2	2	2	2	2	2	2	2	2
Cap, veh/h	103	36	46	347	57	843	49	380	63	403	377	37
Arrive On Green	0.32	0.32	0.32	0.32	0.32	0.32	0.27	0.27	0.27	0.23	0.23	0.23
Sat Flow, veh/h	94	114	146	814	181	1533	182	1400	231	1774	1662	163
Grp Volume(v), veh/h	184	0	0	281	0	174	439	0	0	203	0	246
Grp Sat Flow(s),veh/h/ln	354	0	0	995	0	1533	1813	0	0	1774	0	1825
Q Serve(g_s), s	3.3	0.0	0.0	0.0	0.0	4.3	16.9	0.0	0.0	7.3	0.0	8.7
Cycle Q Clear(g_c), s	22.9	0.0	0.0	19.6	0.0	4.3	16.9	0.0	0.0	7.3	0.0	8.7
Prop In Lane	0.48		0.41	0.82		1.00	0.10		0.13	1.00		0.09
Lane Grp Cap(c), veh/h	185	0	0	404	0	843	493	0	0	403	0	415
V/C Ratio(X)	0.99	0.00	0.00	0.70	0.00	0.21	0.89	0.00	0.00	0.50	0.00	0.59
Avail Cap(c_a), veh/h	185	0	0	404	0	843	552	0	0	403	0	415
HCM Platoon Ratio	1.00	1.00	1.00	1.00	1.00	1.00	1.00	1.00	1.00	1.00	1.00	1.00
Upstream Filter(I)	1.00	0.00	0.00	1.00	0.00	1.00	1.00	0.00	0.00	1.00	0.00	1.00
Uniform Delay (d), s/veh	29.8	0.0	0.0	23.7	0.0	8.6	25.4	0.0	0.0	24.5	0.0	25.1
Incr Delay (d2), s/veh	64.5	0.0	0.0	5.2	0.0	0.1	15.5	0.0	0.0	4.4	0.0	6.1
Initial Q Delay(d3),s/veh	0.0	0.0	0.0	0.0	0.0	0.0	0.0	0.0	0.0	0.0	0.0	0.0
%ile BackOfQ(95%),veh/ln	11.3	0.0	0.0	10.0	0.0	4.9	15.9	0.0	0.0	7.3	0.0	8.8
LnGrp Delay(d),s/veh	94.3	0.0	0.0	28.9	0.0	8.7	40.9	0.0	0.0	28.9	0.0	31.2
LnGrp LOS	F			C		A	D			C		C
Approach Vol, veh/h		184			455			439			449	
Approach Delay, s/veh		94.3			21.2			40.9			30.2	
Approach LOS		F			C			D			C	

Timer	1	2	3	4	5	6	7	8
Assigned Phs		2		4		6		8
Phs Duration (G+Y+Rc), s		26.6		27.4		21.0		27.4
Change Period (Y+Rc), s		4.5		4.5		4.5		4.5
Max Green Setting (Gmax), s		22.1		22.9		16.5		22.9
Max Q Clear Time (g_c+I1), s		18.9		24.9		10.7		21.6
Green Ext Time (p_c), s		0.8		0.0		1.1		0.5

Intersection Summary	
HCM 2010 Ctrl Delay	38.3
HCM 2010 LOS	D

Notes

User approved volume balancing among the lanes for turning movement.

Movement	EBL	EBT	EBR	WBL	WBT	WBR	NBL	NBT	NBR	SBL	SBT	SBR
Lane Configurations												
Volume (veh/h)	10	14	9	180	28	148	15	40	18	401	36	11
Number	7	4	14	3	8	18	5	2	12	1	6	16
Initial Q (Qb), veh	0	0	0	0	0	0	0	0	0	0	0	0
Ped-Bike Adj(A_pbT)	1.00		0.97	1.00		0.97	1.00		1.00	1.00		1.00
Parking Bus, Adj	1.00	1.00	1.00	1.00	1.00	1.00	1.00	1.00	1.00	1.00	1.00	1.00
Adj Sat Flow, veh/h/ln	1900	1863	1900	1900	1863	1863	1900	1863	1900	1863	1863	1900
Adj Flow Rate, veh/h	11	16	10	205	32	168	17	45	20	496	0	0
Adj No. of Lanes	0	1	0	0	1	1	0	1	0	2	1	0
Peak Hour Factor	0.88	0.88	0.88	0.88	0.88	0.88	0.88	0.88	0.88	0.88	0.88	0.88
Percent Heavy Veh, %	2	2	2	2	2	2	2	2	2	2	2	2
Cap, veh/h	82	104	38	306	40	1091	23	62	28	1240	651	0
Arrive On Green	0.35	0.35	0.35	0.35	0.35	0.35	0.06	0.06	0.06	0.35	0.00	0.00
Sat Flow, veh/h	0	296	110	537	113	1538	367	970	431	3548	1863	0
Grp Volume(v), veh/h	37	0	0	237	0	168	82	0	0	496	0	0
Grp Sat Flow(s),veh/h/ln	406	0	0	650	0	1538	1768	0	0	1774	1863	0
Q Serve(g_s), s	0.0	0.0	0.0	0.0	0.0	2.1	2.6	0.0	0.0	6.0	0.0	0.0
Cycle Q Clear(g_c), s	19.9	0.0	0.0	19.9	0.0	2.1	2.6	0.0	0.0	6.0	0.0	0.0
Prop In Lane	0.30		0.27	0.86		1.00	0.21		0.24	1.00		0.00
Lane Grp Cap(c), veh/h	224	0	0	345	0	1091	113	0	0	1240	651	0
V/C Ratio(X)	0.17	0.00	0.00	0.69	0.00	0.15	0.73	0.00	0.00	0.40	0.00	0.00
Avail Cap(c_a), veh/h	224	0	0	345	0	1091	208	0	0	1240	651	0
HCM Platoon Ratio	1.00	1.00	1.00	1.00	1.00	1.00	1.00	1.00	1.00	1.00	1.00	1.00
Upstream Filter(I)	1.00	0.00	0.00	1.00	0.00	1.00	1.00	0.00	0.00	1.00	0.00	0.00
Uniform Delay (d), s/veh	14.4	0.0	0.0	18.6	0.0	2.9	26.2	0.0	0.0	14.0	0.0	0.0
Incr Delay (d2), s/veh	0.3	0.0	0.0	5.6	0.0	0.1	8.6	0.0	0.0	1.0	0.0	0.0
Initial Q Delay(d3),s/veh	0.0	0.0	0.0	0.0	0.0	0.0	0.0	0.0	0.0	0.0	0.0	0.0
%ile BackOfQ(95%),veh/ln	0.7	0.0	0.0	7.6	0.0	3.5	2.7	0.0	0.0	5.5	0.0	0.0
LnGrp Delay(d),s/veh	14.7	0.0	0.0	24.2	0.0	3.0	34.7	0.0	0.0	15.0	0.0	0.0
LnGrp LOS	B			C		A	C			B		
Approach Vol, veh/h		37			405			82			496	
Approach Delay, s/veh		14.7			15.4			34.7			15.0	
Approach LOS		B			B			C			B	

Timer	1	2	3	4	5	6	7	8
Assigned Phs		2		4		6		8
Phs Duration (G+Y+Rc), s		11.2		24.4		24.4		24.4
Change Period (Y+Rc), s		4.5		4.5		4.5		4.5
Max Green Setting (Gmax), s		6.7		19.9		19.9		19.9
Max Q Clear Time (g_c+I1), s		4.6		21.9		8.0		21.9
Green Ext Time (p_c), s		0.1		0.0		1.5		0.0

Intersection Summary	
HCM 2010 Ctrl Delay	16.7
HCM 2010 LOS	B

Notes

User approved volume balancing among the lanes for turning movement.

Movement	EBL	EBT	EBR	WBL	WBT	WBR	NBL	NBT	NBR	SBL	SBT	SBR
Lane Configurations												
Volume (veh/h)	10	11	13	138	35	57	56	80	99	569	297	186
Number	7	4	14	3	8	18	5	2	12	1	6	16
Initial Q (Qb), veh	0	0	0	0	0	0	0	0	0	0	0	0
Ped-Bike Adj(A_pbT)	0.98		0.95	0.98		0.95	1.00		1.00	1.00		0.98
Parking Bus, Adj	1.00	1.00	1.00	1.00	1.00	1.00	1.00	1.00	1.00	1.00	1.00	1.00
Adj Sat Flow, veh/h/ln	1900	1863	1900	1900	1863	1863	1900	1863	1900	1863	1863	1900
Adj Flow Rate, veh/h	11	12	15	155	39	64	63	90	111	591	401	209
Adj No. of Lanes	0	1	0	0	1	1	0	1	0	1	1	0
Peak Hour Factor	0.89	0.89	0.89	0.89	0.89	0.89	0.89	0.89	0.89	0.89	0.89	0.89
Percent Heavy Veh, %	2	2	2	2	2	2	2	2	2	2	2	2
Cap, veh/h	62	63	41	198	30	1019	68	97	120	781	504	262
Arrive On Green	0.21	0.21	0.21	0.21	0.21	0.21	0.17	0.17	0.17	0.44	0.44	0.44
Sat Flow, veh/h	0	296	193	522	140	1509	409	585	721	1774	1145	597
Grp Volume(v), veh/h	38	0	0	194	0	64	264	0	0	591	0	610
Grp Sat Flow(s),veh/h/ln	489	0	0	662	0	1509	1715	0	0	1774	0	1741
Q Serve(g_s), s	0.0	0.0	0.0	0.0	0.0	1.2	11.4	0.0	0.0	21.0	0.0	22.6
Cycle Q Clear(g_c), s	16.0	0.0	0.0	16.0	0.0	1.2	11.4	0.0	0.0	21.0	0.0	22.6
Prop In Lane	0.29		0.39	0.80		1.00	0.24		0.42	1.00		0.34
Lane Grp Cap(c), veh/h	166	0	0	227	0	1019	286	0	0	781	0	766
V/C Ratio(X)	0.23	0.00	0.00	0.85	0.00	0.06	0.92	0.00	0.00	0.76	0.00	0.80
Avail Cap(c_a), veh/h	166	0	0	227	0	1019	286	0	0	781	0	766
HCM Platoon Ratio	1.00	1.00	1.00	1.00	1.00	1.00	1.00	1.00	1.00	1.00	1.00	1.00
Upstream Filter(I)	1.00	0.00	0.00	1.00	0.00	1.00	1.00	0.00	0.00	1.00	0.00	1.00
Uniform Delay (d), s/veh	24.6	0.0	0.0	31.6	0.0	4.7	30.8	0.0	0.0	17.6	0.0	18.1
Incr Delay (d2), s/veh	0.7	0.0	0.0	25.5	0.0	0.0	33.8	0.0	0.0	6.8	0.0	8.4
Initial Q Delay(d3),s/veh	0.0	0.0	0.0	0.0	0.0	0.0	0.0	0.0	0.0	0.0	0.0	0.0
%ile BackOfQ(95%),veh/ln	1.2	0.0	0.0	9.5	0.0	2.0	12.7	0.0	0.0	17.2	0.0	18.5
LnGrp Delay(d),s/veh	25.3	0.0	0.0	57.1	0.0	4.7	64.6	0.0	0.0	24.4	0.0	26.5
LnGrp LOS	C			E		A	E			C		C
Approach Vol, veh/h		38			258			264			1201	
Approach Delay, s/veh		25.3			44.1			64.6			25.5	
Approach LOS		C			D			E			C	

Timer	1	2	3	4	5	6	7	8
Assigned Phs		2		4		6		8
Phs Duration (G+Y+Rc), s		17.0		20.5		37.5		20.5
Change Period (Y+Rc), s		4.5		4.5		4.5		4.5
Max Green Setting (Gmax), s		12.5		16.0		33.0		16.0
Max Q Clear Time (g_c+I1), s		13.4		18.0		24.6		18.0
Green Ext Time (p_c), s		0.0		0.0		4.1		0.0

Intersection Summary	
HCM 2010 Ctrl Delay	34.1
HCM 2010 LOS	C

Notes

User approved volume balancing among the lanes for turning movement.

Movement	EBL	EBT	EBR	WBL	WBT	WBR	NBL	NBT	NBR	SBL	SBT	SBR
Lane Configurations												
Volume (veh/h)	86	19	73	219	49	175	42	327	54	329	71	22
Number	7	4	14	3	8	18	5	2	12	1	6	16
Initial Q (Qb), veh	0	0	0	0	0	0	0	0	0	0	0	0
Ped-Bike Adj(A_pbT)	1.00		0.97	1.00		0.97	1.00		1.00	1.00		0.96
Parking Bus, Adj	1.00	1.00	1.00	1.00	1.00	1.00	1.00	1.00	1.00	1.00	1.00	1.00
Adj Sat Flow, veh/h/ln	1900	1863	1900	1900	1863	1863	1900	1863	1900	1863	1863	1900
Adj Flow Rate, veh/h	91	20	78	233	52	186	45	348	57	224	252	23
Adj No. of Lanes	0	1	0	0	1	1	0	1	0	1	1	0
Peak Hour Factor	0.94	0.94	0.94	0.94	0.94	0.94	0.94	0.94	0.94	0.94	0.94	0.94
Percent Heavy Veh, %	2	2	2	2	2	2	2	2	2	2	2	2
Cap, veh/h	88	33	34	336	55	844	50	384	63	421	398	36
Arrive On Green	0.31	0.31	0.31	0.31	0.31	0.31	0.27	0.27	0.27	0.24	0.24	0.24
Sat Flow, veh/h	53	108	113	810	181	1531	181	1402	230	1774	1675	153
Grp Volume(v), veh/h	189	0	0	285	0	186	450	0	0	224	0	275
Grp Sat Flow(s),veh/h/ln	273	0	0	991	0	1531	1813	0	0	1774	0	1828
Q Serve(g_s), s	1.8	0.0	0.0	0.0	0.0	4.7	17.7	0.0	0.0	8.1	0.0	10.0
Cycle Q Clear(g_c), s	22.5	0.0	0.0	20.7	0.0	4.7	17.7	0.0	0.0	8.1	0.0	10.0
Prop In Lane	0.48		0.41	0.82		1.00	0.10		0.13	1.00		0.08
Lane Grp Cap(c), veh/h	156	0	0	391	0	844	497	0	0	421	0	434
V/C Ratio(X)	1.21	0.00	0.00	0.73	0.00	0.22	0.91	0.00	0.00	0.53	0.00	0.63
Avail Cap(c_a), veh/h	156	0	0	391	0	844	529	0	0	421	0	434
HCM Platoon Ratio	1.00	1.00	1.00	1.00	1.00	1.00	1.00	1.00	1.00	1.00	1.00	1.00
Upstream Filter(I)	1.00	0.00	0.00	1.00	0.00	1.00	1.00	0.00	0.00	1.00	0.00	1.00
Uniform Delay (d), s/veh	29.8	0.0	0.0	25.0	0.0	8.8	25.8	0.0	0.0	24.5	0.0	25.2
Incr Delay (d2), s/veh	141.2	0.0	0.0	6.7	0.0	0.1	18.6	0.0	0.0	4.7	0.0	6.9
Initial Q Delay(d3),s/veh	0.0	0.0	0.0	0.0	0.0	0.0	0.0	0.0	0.0	0.0	0.0	0.0
%ile BackOfQ(95%),veh/ln	16.6	0.0	0.0	10.5	0.0	5.4	16.8	0.0	0.0	8.0	0.0	9.7
LnGrp Delay(d),s/veh	171.0	0.0	0.0	31.7	0.0	8.9	44.4	0.0	0.0	29.3	0.0	32.1
LnGrp LOS	F			C		A	D			C		C
Approach Vol, veh/h		189			471			450			499	
Approach Delay, s/veh		171.0			22.7			44.4			30.8	
Approach LOS		F			C			D			C	

Timer	1	2	3	4	5	6	7	8
Assigned Phs		2		4		6		8
Phs Duration (G+Y+Rc), s		26.0		27.0		22.0		27.0
Change Period (Y+Rc), s		4.5		4.5		4.5		4.5
Max Green Setting (Gmax), s		21.5		22.5		17.5		22.5
Max Q Clear Time (g_c+I1), s		19.7		24.5		12.0		22.7
Green Ext Time (p_c), s		0.5		0.0		1.2		0.0

Intersection Summary	
HCM 2010 Ctrl Delay	48.7
HCM 2010 LOS	D

Notes

User approved volume balancing among the lanes for turning movement.

Movement	EBL	EBT	EBR	WBL	WBT	WBR	NBL	NBT	NBR	SBL	SBT	SBR
Lane Configurations												
Volume (veh/h)	10	15	9	180	29	160	16	41	19	428	37	11
Number	7	4	14	3	8	18	5	2	12	1	6	16
Initial Q (Qb), veh	0	0	0	0	0	0	0	0	0	0	0	0
Ped-Bike Adj(A_pbT)	1.00		0.97	1.00		0.97	1.00		1.00	1.00		1.00
Parking Bus, Adj	1.00	1.00	1.00	1.00	1.00	1.00	1.00	1.00	1.00	1.00	1.00	1.00
Adj Sat Flow, veh/h/ln	1900	1863	1900	1900	1863	1863	1900	1863	1900	1863	1863	1900
Adj Flow Rate, veh/h	11	17	10	205	33	182	18	47	22	527	0	0
Adj No. of Lanes	0	1	0	0	1	1	0	1	0	2	1	0
Peak Hour Factor	0.88	0.88	0.88	0.88	0.88	0.88	0.88	0.88	0.88	0.88	0.88	0.88
Percent Heavy Veh, %	2	2	2	2	2	2	2	2	2	2	2	2
Cap, veh/h	82	109	39	302	40	1087	24	63	29	1230	646	0
Arrive On Green	0.35	0.35	0.35	0.35	0.35	0.35	0.07	0.07	0.07	0.35	0.00	0.00
Sat Flow, veh/h	0	310	111	525	115	1538	365	954	446	3548	1863	0
Grp Volume(v), veh/h	38	0	0	238	0	182	87	0	0	527	0	0
Grp Sat Flow(s),veh/h/ln	421	0	0	639	0	1538	1766	0	0	1774	1863	0
Q Serve(g_s), s	0.0	0.0	0.0	0.0	0.0	2.3	2.8	0.0	0.0	6.5	0.0	0.0
Cycle Q Clear(g_c), s	19.9	0.0	0.0	19.9	0.0	2.3	2.8	0.0	0.0	6.5	0.0	0.0
Prop In Lane	0.29		0.26	0.86		1.00	0.21		0.25	1.00		0.00
Lane Grp Cap(c), veh/h	229	0	0	342	0	1087	116	0	0	1230	646	0
V/C Ratio(X)	0.17	0.00	0.00	0.70	0.00	0.17	0.75	0.00	0.00	0.43	0.00	0.00
Avail Cap(c_a), veh/h	229	0	0	342	0	1087	214	0	0	1230	646	0
HCM Platoon Ratio	1.00	1.00	1.00	1.00	1.00	1.00	1.00	1.00	1.00	1.00	1.00	1.00
Upstream Filter(I)	1.00	0.00	0.00	1.00	0.00	1.00	1.00	0.00	0.00	1.00	0.00	0.00
Uniform Delay (d), s/veh	14.3	0.0	0.0	18.8	0.0	3.0	26.1	0.0	0.0	14.2	0.0	0.0
Incr Delay (d2), s/veh	0.3	0.0	0.0	6.1	0.0	0.1	9.3	0.0	0.0	1.1	0.0	0.0
Initial Q Delay(d3),s/veh	0.0	0.0	0.0	0.0	0.0	0.0	0.0	0.0	0.0	0.0	0.0	0.0
%ile BackOfQ(95%),veh/ln	0.7	0.0	0.0	7.6	0.0	3.8	2.9	0.0	0.0	6.0	0.0	0.0
LnGrp Delay(d),s/veh	14.6	0.0	0.0	24.8	0.0	3.0	35.4	0.0	0.0	15.3	0.0	0.0
LnGrp LOS	B			C		A	D			B		
Approach Vol, veh/h		38			420			87			527	
Approach Delay, s/veh		14.6			15.4			35.4			15.3	
Approach LOS		B			B			D			B	

Timer	1	2	3	4	5	6	7	8
Assigned Phs		2		4		6		8
Phs Duration (G+Y+Rc), s		11.4		24.4		24.2		24.4
Change Period (Y+Rc), s		4.5		4.5		4.5		4.5
Max Green Setting (Gmax), s		6.9		19.9		19.7		19.9
Max Q Clear Time (g_c+I1), s		4.8		21.9		8.5		21.9
Green Ext Time (p_c), s		0.1		0.0		1.6		0.0

Intersection Summary	
HCM 2010 Ctrl Delay	17.0
HCM 2010 LOS	B

Notes

User approved volume balancing among the lanes for turning movement.

Movement	EBL	EBT	EBR	WBL	WBT	WBR	NBL	NBT	NBR	SBL	SBT	SBR
Lane Configurations												
Volume (veh/h)	11	12	13	146	38	58	60	86	106	601	315	200
Number	7	4	14	3	8	18	5	2	12	1	6	16
Initial Q (Qb), veh	0	0	0	0	0	0	0	0	0	0	0	0
Ped-Bike Adj(A_pbT)	1.00		0.95	1.00		0.95	1.00		0.96	1.00		0.98
Parking Bus, Adj	1.00	1.00	1.00	1.00	1.00	1.00	1.00	1.00	1.00	1.00	1.00	1.00
Adj Sat Flow, veh/h/ln	1900	1863	1900	1900	1863	1863	1900	1863	1900	1863	1863	1900
Adj Flow Rate, veh/h	12	13	15	164	43	65	67	97	119	627	421	225
Adj No. of Lanes	0	1	0	0	1	1	0	1	0	1	1	0
Peak Hour Factor	0.89	0.89	0.89	0.89	0.89	0.89	0.89	0.89	0.89	0.89	0.89	0.89
Percent Heavy Veh, %	2	2	2	2	2	2	2	2	2	2	2	2
Cap, veh/h	58	59	35	191	29	1033	67	98	120	818	523	280
Arrive On Green	0.20	0.20	0.20	0.20	0.20	0.20	0.17	0.17	0.17	0.46	0.46	0.46
Sat Flow, veh/h	0	292	175	547	143	1505	399	578	709	1774	1134	606
Grp Volume(v), veh/h	40	0	0	207	0	65	283	0	0	627	0	646
Grp Sat Flow(s),veh/h/ln	468	0	0	690	0	1505	1687	0	0	1774	0	1740
Q Serve(g_s), s	0.0	0.0	0.0	0.0	0.0	1.2	13.4	0.0	0.0	23.6	0.0	25.5
Cycle Q Clear(g_c), s	16.1	0.0	0.0	16.1	0.0	1.2	13.4	0.0	0.0	23.6	0.0	25.5
Prop In Lane	0.30		0.37	0.79		1.00	0.24		0.42	1.00		0.35
Lane Grp Cap(c), veh/h	153	0	0	220	0	1033	285	0	0	818	0	803
V/C Ratio(X)	0.26	0.00	0.00	0.94	0.00	0.06	0.99	0.00	0.00	0.77	0.00	0.80
Avail Cap(c_a), veh/h	153	0	0	220	0	1033	285	0	0	818	0	803
HCM Platoon Ratio	1.00	1.00	1.00	1.00	1.00	1.00	1.00	1.00	1.00	1.00	1.00	1.00
Upstream Filter(I)	1.00	0.00	0.00	1.00	0.00	1.00	1.00	0.00	0.00	1.00	0.00	1.00
Uniform Delay (d), s/veh	27.0	0.0	0.0	34.6	0.0	4.8	33.2	0.0	0.0	18.0	0.0	18.5
Incr Delay (d2), s/veh	0.9	0.0	0.0	44.9	0.0	0.0	51.7	0.0	0.0	6.8	0.0	8.4
Initial Q Delay(d3),s/veh	0.0	0.0	0.0	0.0	0.0	0.0	0.0	0.0	0.0	0.0	0.0	0.0
%ile BackOfQ(95%),veh/ln	1.4	0.0	0.0	11.7	0.0	2.2	15.6	0.0	0.0	19.0	0.0	20.0
LnGrp Delay(d),s/veh	27.9	0.0	0.0	79.5	0.0	4.8	84.9	0.0	0.0	24.7	0.0	26.9
LnGrp LOS	C			E		A	F			C		C
Approach Vol, veh/h		40			272			283			1273	
Approach Delay, s/veh		27.9			61.6			84.9			25.8	
Approach LOS		C			E			F			C	

Timer	1	2	3	4	5	6	7	8
Assigned Phs		2		4		6		8
Phs Duration (G+Y+Rc), s		18.0		20.6		41.4		20.6
Change Period (Y+Rc), s		4.5		4.5		4.5		4.5
Max Green Setting (Gmax), s		13.5		16.1		36.9		16.1
Max Q Clear Time (g_c+I1), s		15.4		18.1		27.5		18.1
Green Ext Time (p_c), s		0.0		0.0		4.7		0.0

Intersection Summary	
HCM 2010 Ctrl Delay	40.0
HCM 2010 LOS	D

Notes

User approved volume balancing among the lanes for turning movement.

Movement	EBL	EBT	EBR	WBL	WBT	WBR	NBL	NBT	NBR	SBL	SBT	SBR
Lane Configurations												
Volume (veh/h)	93	20	78	227	52	181	45	350	58	334	75	23
Number	7	4	14	3	8	18	5	2	12	1	6	16
Initial Q (Qb), veh	0	0	0	0	0	0	0	0	0	0	0	0
Ped-Bike Adj(A_pbT)	1.00		0.97	1.00		0.97	1.00		1.00	1.00		0.96
Parking Bus, Adj	1.00	1.00	1.00	1.00	1.00	1.00	1.00	1.00	1.00	1.00	1.00	1.00
Adj Sat Flow, veh/h/ln	1900	1863	1900	1900	1863	1863	1900	1863	1900	1863	1863	1900
Adj Flow Rate, veh/h	99	21	83	241	55	193	48	372	62	230	256	24
Adj No. of Lanes	0	1	0	0	1	1	0	1	0	1	1	0
Peak Hour Factor	0.94	0.94	0.94	0.94	0.94	0.94	0.94	0.94	0.94	0.94	0.94	0.94
Percent Heavy Veh, %	2	2	2	2	2	2	2	2	2	2	2	2
Cap, veh/h	81	30	29	335	58	843	52	402	67	414	390	37
Arrive On Green	0.31	0.31	0.31	0.31	0.31	0.31	0.29	0.29	0.29	0.23	0.23	0.23
Sat Flow, veh/h	42	96	95	818	187	1532	181	1399	233	1774	1670	157
Grp Volume(v), veh/h	203	0	0	296	0	193	482	0	0	230	0	280
Grp Sat Flow(s),veh/h/ln	233	0	0	1004	0	1532	1813	0	0	1774	0	1827
Q Serve(g_s), s	1.6	0.0	0.0	0.0	0.0	5.2	20.5	0.0	0.0	9.1	0.0	11.0
Cycle Q Clear(g_c), s	24.5	0.0	0.0	22.9	0.0	5.2	20.5	0.0	0.0	9.1	0.0	11.0
Prop In Lane	0.49		0.41	0.81		1.00	0.10		0.13	1.00		0.09
Lane Grp Cap(c), veh/h	140	0	0	393	0	843	521	0	0	414	0	426
V/C Ratio(X)	1.45	0.00	0.00	0.75	0.00	0.23	0.92	0.00	0.00	0.56	0.00	0.66
Avail Cap(c_a), veh/h	140	0	0	393	0	843	537	0	0	414	0	426
HCM Platoon Ratio	1.00	1.00	1.00	1.00	1.00	1.00	1.00	1.00	1.00	1.00	1.00	1.00
Upstream Filter(I)	1.00	0.00	0.00	1.00	0.00	1.00	1.00	0.00	0.00	1.00	0.00	1.00
Uniform Delay (d), s/veh	31.9	0.0	0.0	26.8	0.0	9.5	27.4	0.0	0.0	26.8	0.0	27.5
Incr Delay (d2), s/veh	239.9	0.0	0.0	8.0	0.0	0.1	21.7	0.0	0.0	5.3	0.0	7.7
Initial Q Delay(d3),s/veh	0.0	0.0	0.0	0.0	0.0	0.0	0.0	0.0	0.0	0.0	0.0	0.0
%ile BackOfQ(95%),veh/ln	22.2	0.0	0.0	11.6	0.0	6.0	19.3	0.0	0.0	8.7	0.0	10.6
LnGrp Delay(d),s/veh	271.8	0.0	0.0	34.9	0.0	9.6	49.1	0.0	0.0	32.1	0.0	35.2
LnGrp LOS	F			C		A	D			C		D
Approach Vol, veh/h		203			489			482			510	
Approach Delay, s/veh		271.8			24.9			49.1			33.8	
Approach LOS		F			C			D			C	

Timer	1	2	3	4	5	6	7	8
Assigned Phs		2		4		6		8
Phs Duration (G+Y+Rc), s		28.0		29.0		23.0		29.0
Change Period (Y+Rc), s		4.5		4.5		4.5		4.5
Max Green Setting (Gmax), s		23.5		24.5		18.5		24.5
Max Q Clear Time (g_c+I1), s		22.5		26.5		13.0		24.9
Green Ext Time (p_c), s		0.3		0.0		1.2		0.0

Intersection Summary	
HCM 2010 Ctrl Delay	64.3
HCM 2010 LOS	E

Notes

User approved volume balancing among the lanes for turning movement.

Movement	EBL	EBT	EBR	WBL	WBT	WBR	NBL	NBT	NBR	SBL	SBT	SBR
Lane Configurations												
Volume (veh/h)	11	16	10	183	31	161	17	43	20	431	39	12
Number	7	4	14	3	8	18	5	2	12	1	6	16
Initial Q (Qb), veh	0	0	0	0	0	0	0	0	0	0	0	0
Ped-Bike Adj(A_pbT)	1.00		0.97	1.00		0.97	1.00		1.00	1.00		1.00
Parking Bus, Adj	1.00	1.00	1.00	1.00	1.00	1.00	1.00	1.00	1.00	1.00	1.00	1.00
Adj Sat Flow, veh/h/ln	1900	1863	1900	1900	1863	1863	1900	1863	1900	1863	1863	1900
Adj Flow Rate, veh/h	12	18	11	208	35	183	19	49	23	534	0	0
Adj No. of Lanes	0	1	0	0	1	1	0	1	0	2	1	0
Peak Hour Factor	0.88	0.88	0.88	0.88	0.88	0.88	0.88	0.88	0.88	0.88	0.88	0.88
Percent Heavy Veh, %	2	2	2	2	2	2	2	2	2	2	2	2
Cap, veh/h	82	106	39	304	42	1086	25	64	30	1216	638	0
Arrive On Green	0.35	0.35	0.35	0.35	0.35	0.35	0.07	0.07	0.07	0.34	0.00	0.00
Sat Flow, veh/h	0	301	110	527	120	1539	369	951	446	3548	1863	0
Grp Volume(v), veh/h	41	0	0	243	0	183	91	0	0	534	0	0
Grp Sat Flow(s),veh/h/ln	411	0	0	647	0	1539	1766	0	0	1774	1863	0
Q Serve(g_s), s	0.0	0.0	0.0	0.0	0.0	2.3	2.9	0.0	0.0	6.6	0.0	0.0
Cycle Q Clear(g_c), s	20.1	0.0	0.0	20.1	0.0	2.3	2.9	0.0	0.0	6.6	0.0	0.0
Prop In Lane	0.29		0.27	0.86		1.00	0.21		0.25	1.00		0.00
Lane Grp Cap(c), veh/h	227	0	0	346	0	1086	118	0	0	1216	638	0
V/C Ratio(X)	0.18	0.00	0.00	0.70	0.00	0.17	0.77	0.00	0.00	0.44	0.00	0.00
Avail Cap(c_a), veh/h	227	0	0	346	0	1086	214	0	0	1216	638	0
HCM Platoon Ratio	1.00	1.00	1.00	1.00	1.00	1.00	1.00	1.00	1.00	1.00	1.00	1.00
Upstream Filter(I)	1.00	0.00	0.00	1.00	0.00	1.00	1.00	0.00	0.00	1.00	0.00	0.00
Uniform Delay (d), s/veh	14.3	0.0	0.0	18.7	0.0	3.0	26.1	0.0	0.0	14.5	0.0	0.0
Incr Delay (d2), s/veh	0.4	0.0	0.0	6.3	0.0	0.1	10.0	0.0	0.0	1.2	0.0	0.0
Initial Q Delay(d3),s/veh	0.0	0.0	0.0	0.0	0.0	0.0	0.0	0.0	0.0	0.0	0.0	0.0
%ile BackOfQ(95%),veh/ln	0.8	0.0	0.0	7.8	0.0	3.8	3.1	0.0	0.0	6.1	0.0	0.0
LnGrp Delay(d),s/veh	14.7	0.0	0.0	25.0	0.0	3.1	36.1	0.0	0.0	15.6	0.0	0.0
LnGrp LOS	B			C		A	D			B		
Approach Vol, veh/h		41			426			91			534	
Approach Delay, s/veh		14.7			15.6			36.1			15.6	
Approach LOS		B			B			D			B	

Timer	1	2	3	4	5	6	7	8
Assigned Phs		2		4		6		8
Phs Duration (G+Y+Rc), s		11.4		24.6		24.0		24.6
Change Period (Y+Rc), s		4.5		4.5		4.5		4.5
Max Green Setting (Gmax), s		6.9		20.1		19.5		20.1
Max Q Clear Time (g_c+I1), s		4.9		22.1		8.6		22.1
Green Ext Time (p_c), s		0.1		0.0		1.6		0.0

Intersection Summary	
HCM 2010 Ctrl Delay	17.3
HCM 2010 LOS	B

Notes

User approved volume balancing among the lanes for turning movement.

LINSCOTT, LAW & GREENSPAN, ENGINEERS
600 S. Lake Avenue, Suite 500, Pasadena CA 91106
(626) 796.2322 Fax (626) 792-0941

INTERSECTION CAPACITY UTILIZATION

Aerojet Avenue-I-10 Fwy EB Ramps @ Flair Drive

N-S St: Aerojet Avenue-I-10 Fwy EB Ramps
E-W St: Flair Drive
Project: Flair Spectrum Project/1-14-4074-1
File: ICU10

Peak hr: AM
Annual Growth: 0.82%

Phase I

Date: 10/22/2014
Date of Count: 2014
Projection Year: 2016

	2014 EXIST. TRAFFIC			2014 EXISTING WITH PROJECT				2014 EXIST. W/PROJECT + MITIGATION				2016 FUTURE WITHOUT PROJECT				2016 FUTURE WITH PROJECT				2016 FUTURE W/PROJECT + MITIGATION			
	1	2	V/C	Added	Total	2	V/C	Added	Total	2	V/C	Added	Total	2	V/C	Added	Total	2	V/C	Added	Total	2	V/C
Movement	Volume	Capacity	Ratio	Volume	Volume	Capacity	Ratio	Volume	Volume	Capacity	Ratio	Volume	Volume	Capacity	Ratio	Volume	Volume	Capacity	Ratio	Volume	Volume	Capacity	Ratio
Nb Left	54	0	0.034 *	0	54	0	0.034 *	0	54	0	0.034 *	1	55	0	0.034 *	0	55	0	0.034 *	0	55	0	0.034
Nb Thru	77	1600	0.141	0	77	1600	0.141	0	77	1600	0.141	1	78	1600	0.144	0	78	1600	0.144	0	78	1600	0.144 *
Nb Right	95	0	-	0	95	0	-	0	95	0	-	2	97	0	-	0	97	0	-	0	97	0	-
Sb Left	446	0	0.279	96	542	0	0.339	0	542	0	0.339	7	453	0	0.283	96	549	0	0.343	0	549	2880	0.191 *
Sb Thru	255	1600	0.550 *	0	255	1600	0.610 *	0	255	1600	0.610 *	35	290	1600	0.578 *	0	290	1600	0.638 *	0	290	0	0.000
Sb Right	179	0	-	0	179	0	-	0	179	0	-	3	182	0	-	0	182	0	-	0	182	0	-
Eb Left	10	0	0.006 *	0	10	0	0.006 *	0	10	0	0.006 *	0	10	0	0.006 *	0	10	0	0.006 *	0	10	0	0.006 *
Eb Thru	11	1600	0.021	0	11	1600	0.021	0	11	1600	0.021	0	11	1600	0.021	0	11	1600	0.021	0	11	1600	0.021
Eb Right	12	0	-	0	12	0	-	0	12	0	-	0	12	0	-	0	12	0	-	0	12	0	-
Wb Left	106	0	0.066	28	134	0	0.084	0	134	0	0.084	2	108	0	0.067	28	136	0	0.085	0	136	0	0.085
Wb Thru	34	1600	0.088 *	0	34	1600	0.105 *	0	34	1600	0.105 *	1	35	1600	0.089 *	0	35	1600	0.106 *	0	35	1600	0.106 *
Wb Right	18	1600	0.011	19	37	1600	0.023	0	37	1600	0.023	0	18	1600	0.011	19	37	1600	0.023	0	37	1600	0.023
Yellow Allowance:			0.100 *				0.100 *				0.100 *				0.100 *				0.100 *				0.100 *
(Existing All-Way Stop Control Intersection)																							
ICU			0.778				0.855				0.855				0.808				0.886				0.547
LOS			C				D				D				D				D				A

** Key conflicting movement as a part of ICU*
1 Counts conducted by.The Traffic Solution
2 Capacity expressed in veh/hour of green

LINSCOTT, LAW & GREENSPAN, ENGINEERS
600 S. Lake Avenue, Suite 500, Pasadena CA 91106
(626) 796.2322 Fax (626) 792-0941

INTERSECTION CAPACITY UTILIZATION

Aerojet Avenue-I-10 Fwy EB Ramps @ Flair Drive

N-S St: Aerojet Avenue-I-10 Fwy EB Ramps
E-W St: Flair Drive
Project: Flair Spectrum Project/1-14-4074-1
File: ICU10

Peak hr: PM
Annual Growth: 0.82%

Phase I

Date: 10/22/2014
Date of Count: 2014
Projection Year: 2016

	2014 EXIST. TRAFFIC			2014 EXISTING WITH PROJECT				2014 EXIST. W/PROJECT + MITIGATION				2016 FUTURE WITHOUT PROJECT				2016 FUTURE WITH PROJECT				2016 FUTURE W/PROJECT + MITIGATION			
	1	2	V/C	Added	Total	2	V/C	Added	Total	2	V/C	Added	Total	2	V/C	Added	Total	2	V/C	Added	Total	2	V/C
Movement	Volume	Capacity	Ratio	Volume	Volume	Capacity	Ratio	Volume	Volume	Capacity	Ratio	Volume	Volume	Capacity	Ratio	Volume	Volume	Capacity	Ratio	Volume	Volume	Capacity	Ratio
Nb Left	40	0	0.025	0	40	0	0.025	0	40	0	0.025	1	41	0	0.025	0	41	0	0.025	0	41	0	0.025
Nb Thru	314	1600	0.254 *	0	314	1600	0.254 *	0	314	1600	0.254 *	5	319	1600	0.258 *	0	319	1600	0.258 *	0	319	1600	0.258 *
Nb Right	52	0	-	0	52	0	-	0	52	0	-	1	53	0	-	0	53	0	-	0	53	0	-
Sb Left	69	0	0.043 *	221	290	0	0.181 *	0	290	0	0.181 *	1	70	0	0.044 *	221	291	0	0.182 *	0	291	2880	0.101 *
Sb Thru	48	1600	0.086	0	48	1600	0.224	0	48	1600	0.224	22	70	1600	0.101	0	70	1600	0.239	0	70	0	0.000
Sb Right	21	0	-	0	21	0	-	0	21	0	-	0	21	0	-	0	21	0	-	0	21	0	-
Eb Left	83	0	0.052	0	83	0	0.052	0	83	0	0.052	1	84	0	0.053	0	84	0	0.053	0	84	0	0.053
Eb Thru	18	1600	0.107 *	0	18	1600	0.107 *	0	18	1600	0.107 *	0	18	1600	0.109 *	0	18	1600	0.109 *	0	18	1600	0.109 *
Eb Right	70	0	-	0	70	0	-	0	70	0	-	1	71	0	-	0	71	0	-	0	71	0	-
Wb Left	115	0	0.072 *	99	214	0	0.134 *	0	214	0	0.134 *	2	117	0	0.073 *	99	216	0	0.135 *	0	216	0	0.135 *
Wb Thru	47	1600	0.101	0	47	1600	0.163	0	47	1600	0.163	1	48	1600	0.103	0	48	1600	0.165	0	48	1600	0.165
Wb Right	76	1600	0.048	87	163	1600	0.102	0	163	1600	0.102	1	77	1600	0.048	87	164	1600	0.103	0	164	1600	0.103
Yellow Allowance:			0.100 *				0.100 *				0.100 *				0.100 *				0.100 *				0.100 *
(Existing All-Way Stop Control Intersection)																							
ICU			0.576				0.776				0.776				0.583				0.783				0.703
LOS			A				C				C				A				C				C

** Key conflicting movement as a part of ICU*
1 Counts conducted by.The Traffic Solution
2 Capacity expressed in veh/hour of green

LINSCOTT, LAW & GREENSPAN, ENGINEERS
600 S. Lake Avenue, Suite 500, Pasadena CA 91106
(626) 796.2322 Fax (626) 792-0941

INTERSECTION CAPACITY UTILIZATION

N-S St: Aerojet Avenue-I-10 Fwy EB Ramps
E-W St: Flair Drive
Project: Flair Spectrum Project/1-14-4074-1
File: ICU10

Aerojet Avenue-I-10 Fwy EB Ramps @ Flair Drive
Peak hr: SAT MID-DAY
Annual Growth: 0.82%

Phase I

Date: 10/22/2014
Date of Count: 2014
Projection Year: 2016

	2014 EXIST. TRAFFIC			2014 EXISTING WITH PROJECT				2014 EXIST. W/PROJECT + MITIGATION				2016 FUTURE WITHOUT PROJECT				2016 FUTURE WITH PROJECT				2016 FUTURE W/PROJECT + MITIGATION			
	1	2	V/C	Added	Total	2	V/C	Added	Total	2	V/C	Added	Total	2	V/C	Added	Total	2	V/C	Added	Total	2	V/C
Movement	Volume	Capacity	Ratio	Volume	Volume	Capacity	Ratio	Volume	Volume	Capacity	Ratio	Volume	Volume	Capacity	Ratio	Volume	Volume	Capacity	Ratio	Volume	Volume	Capacity	Ratio
Nb Left	15	0	0.009	0	15	0	0.009	0	15	0	0.009	0	15	0	0.010	0	15	0	0.010	0	15	0	0.010
Nb Thru	39	1600	0.045 *	0	39	1600	0.045 *	0	39	1600	0.045 *	1	40	1600	0.046 *	0	40	1600	0.046 *	0	40	1600	0.046 *
Nb Right	18	0	-	0	18	0	-	0	18	0	-	0	18	0	-	0	18	0	-	0	18	0	-
Sb Left	43	0	0.027 *	357	400	0	0.250 *	0	400	0	0.250 *	1	44	0	0.027 *	357	401	0	0.250 *	0	401	2880	0.139 *
Sb Thru	25	1600	0.049	0	25	1600	0.273	0	25	1600	0.273	11	36	1600	0.057	0	36	1600	0.280	0	36	0	0.000
Sb Right	11	0	-	0	11	0	-	0	11	0	-	0	11	0	-	0	11	0	-	0	11	0	-
Eb Left	10	0	0.006 *	0	10	0	0.006 *	0	10	0	0.006 *	0	10	0	0.006 *	0	10	0	0.006 *	0	10	0	0.006 *
Eb Thru	14	1600	0.021	0	14	1600	0.021	0	14	1600	0.021	0	14	1600	0.021	0	14	1600	0.021	0	14	1600	0.021
Eb Right	9	0	-	0	9	0	-	0	9	0	-	0	9	0	-	0	9	0	-	0	9	0	-
Wb Left	32	0	0.020	147	179	0	0.112	0	179	0	0.112	1	33	0	0.020	147	180	0	0.112	0	180	0	0.112
Wb Thru	28	1600	0.038 *	0	28	1600	0.129 *	0	28	1600	0.129 *	0	28	1600	0.038 *	0	28	1600	0.130 *	0	28	1600	0.130 *
Wb Right	16	1600	0.010	132	148	1600	0.093	0	148	1600	0.093	0	16	1600	0.010	132	148	1600	0.093	0	148	1600	0.093
Yellow Allowance:			0.100 *				0.100 *				0.100 *				0.100 *				0.100 *				0.100 *
(Existing All-Way Stop Control Intersection)																							
ICU			0.216				0.531				0.531				0.218				0.533				0.421
LOS			A				A				A				A				A				A

** Key conflicting movement as a part of ICU*
1 Counts conducted by.The Traffic Solution
2 Capacity expressed in veh/hour of green

LINSCOTT, LAW & GREENSPAN, ENGINEERS
600 S. Lake Avenue, Suite 500, Pasadena CA 91106
(626) 796.2322 Fax (626) 792-0941

INTERSECTION CAPACITY UTILIZATION

Aerojet Avenue-I-10 Fwy EB Ramps @ Flair Drive

N-S St: Aerojet Avenue-I-10 Fwy EB Ramps
E-W St: Flair Drive
Project: Flair Spectrum Project/1-14-4074-1
File: ICU10

Peak hr: AM
Annual Growth: 0.82%

Phases I & II

Date: 10/22/2014
Date of Count: 2014
Projection Year: 2019

	2014 EXIST. TRAFFIC			2014 EXISTING WITH PROJECT				2014 EXIST. W/PROJECT + MITIGATION				2019 FUTURE WITHOUT PROJECT				2019 FUTURE WITH PROJECT				2019 FUTURE W/PROJECT + MITIGATION			
	1	2	V/C	Added	Total	2	V/C	Added	Total	2	V/C	Added	Total	2	V/C	Added	Total	2	V/C	Added	Total	2	V/C
Movement	Volume	Capacity	Ratio	Volume	Volume	Capacity	Ratio	Volume	Volume	Capacity	Ratio	Volume	Volume	Capacity	Ratio	Volume	Volume	Capacity	Ratio	Volume	Volume	Capacity	Ratio
Nb Left	54	0	0.034 *	0	54	0	0.034 *	0	54	0	0.034 *	2	56	0	0.035 *	0	56	0	0.035 *	0	56	0	0.035
Nb Thru	77	1600	0.141	0	77	1600	0.141	0	77	1600	0.141	3	80	1600	0.147	0	80	1600	0.147	0	80	1600	0.147 *
Nb Right	95	0	-	0	95	0	-	0	95	0	-	4	99	0	-	0	99	0	-	0	99	0	-
Sb Left	446	0	0.279	104	550	0	0.344	0	550	0	0.344	19	465	0	0.290	104	569	0	0.355	0	569	2880	0.197 *
Sb Thru	255	1600	0.550 *	0	255	1600	0.615 *	0	255	1600	0.615 *	42	297	1600	0.592 *	0	297	1600	0.657 *	0	297	0	0.000
Sb Right	179	0	-	0	179	0	-	0	179	0	-	7	186	0	-	0	186	0	-	0	186	0	-
Eb Left	10	0	0.006 *	0	10	0	0.006 *	0	10	0	0.006 *	0	10	0	0.007 *	0	10	0	0.007 *	0	10	0	0.007 *
Eb Thru	11	1600	0.021	0	11	1600	0.021	0	11	1600	0.021	0	11	1600	0.021	0	11	1600	0.021	0	11	1600	0.021
Eb Right	12	0	-	0	12	0	-	0	12	0	-	1	13	0	-	0	13	0	-	0	13	0	-
Wb Left	106	0	0.066	28	134	0	0.084	0	134	0	0.084	4	110	0	0.069	28	138	0	0.087	0	138	0	0.087
Wb Thru	34	1600	0.088 *	0	34	1600	0.105 *	0	34	1600	0.105 *	1	35	1600	0.091 *	0	35	1600	0.109 *	0	35	1600	0.109 *
Wb Right	18	1600	0.011	38	56	1600	0.035	0	56	1600	0.035	1	19	1600	0.012	38	57	1600	0.035	0	57	1600	0.035
Yellow Allowance:			0.100 *				0.100 *				0.100 *				0.100 *				0.100 *				0.100 *
(Existing All-Way Stop Control Intersection)																							
ICU			0.778				0.860				0.860				0.825				0.908				0.560
LOS			C				D				D				D				E				A

** Key conflicting movement as a part of ICU*
1 Counts conducted by.The Traffic Solution
2 Capacity expressed in veh/hour of green

LINSCOTT, LAW & GREENSPAN, ENGINEERS
600 S. Lake Avenue, Suite 500, Pasadena CA 91106
(626) 796.2322 Fax (626) 792-0941

INTERSECTION CAPACITY UTILIZATION

Aerojet Avenue-I-10 Fwy EB Ramps @ Flair Drive

N-S St: Aerojet Avenue-I-10 Fwy EB Ramps
E-W St: Flair Drive
Project: Flair Spectrum Project/1-14-4074-1
File: ICU10

Peak hr: PM
Annual Growth: 0.82%

Phases I & II

Date: 10/22/2014
Date of Count: 2014
Projection Year: 2019

	2014 EXIST. TRAFFIC			2014 EXISTING WITH PROJECT				2014 EXIST. W/PROJECT + MITIGATION				2019 FUTURE WITHOUT PROJECT				2019 FUTURE WITH PROJECT				2019 FUTURE W/PROJECT + MITIGATION			
	1	2	V/C	Added	Total	2	V/C	Added	Total	2	V/C	Added	Total	2	V/C	Added	Total	2	V/C	Added	Total	2	V/C
Movement	Volume	Capacity	Ratio	Volume	Volume	Capacity	Ratio	Volume	Volume	Capacity	Ratio	Volume	Volume	Capacity	Ratio	Volume	Volume	Capacity	Ratio	Volume	Volume	Capacity	Ratio
Nb Left	40	0	0.025	0	40	0	0.025	0	40	0	0.025	2	42	0	0.026	0	42	0	0.026	0	42	0	0.026
Nb Thru	314	1600	0.254 *	0	314	1600	0.254 *	0	314	1600	0.254 *	13	327	1600	0.264 *	0	327	1600	0.264 *	0	327	1600	0.264 *
Nb Right	52	0	-	0	52	0	-	0	52	0	-	2	54	0	-	0	54	0	-	0	54	0	-
Sb Left	69	0	0.043 *	257	326	0	0.204 *	0	326	0	0.204 *	3	72	0	0.045 *	257	329	0	0.206 *	0	329	2880	0.114 *
Sb Thru	48	1600	0.086	0	48	1600	0.247	0	48	1600	0.247	23	71	1600	0.103	0	71	1600	0.264	0	71	0	0.000
Sb Right	21	0	-	0	21	0	-	0	21	0	-	1	22	0	-	0	22	0	-	0	22	0	-
Eb Left	83	0	0.052	0	83	0	0.052	0	83	0	0.052	3	86	0	0.054	0	86	0	0.054	0	86	0	0.054
Eb Thru	18	1600	0.107 *	0	18	1600	0.107 *	0	18	1600	0.107 *	1	19	1600	0.111 *	0	19	1600	0.111 *	0	19	1600	0.111 *
Eb Right	70	0	-	0	70	0	-	0	70	0	-	3	73	0	-	0	73	0	-	0	73	0	-
Wb Left	115	0	0.072 *	99	214	0	0.134 *	0	214	0	0.134 *	5	120	0	0.075 *	99	219	0	0.137 *	0	219	0	0.137 *
Wb Thru	47	1600	0.101	0	47	1600	0.163	0	47	1600	0.163	2	49	1600	0.105	0	49	1600	0.167	0	49	1600	0.167
Wb Right	76	1600	0.048	96	172	1600	0.108	0	172	1600	0.108	3	79	1600	0.049	96	175	1600	0.109	0	175	1600	0.109
Yellow Allowance:			0.100 *				0.100 *				0.100 *				0.100 *				0.100 *				0.100 *
(Existing All-Way Stop Control Intersection)																							
ICU			0.576				0.798				0.798				0.595				0.818				0.727
LOS			A				C				C				A				D				C

** Key conflicting movement as a part of ICU*
1 Counts conducted by.The Traffic Solution
2 Capacity expressed in veh/hour of green

LINSCOTT, LAW & GREENSPAN, ENGINEERS
600 S. Lake Avenue, Suite 500, Pasadena CA 91106
(626) 796.2322 Fax (626) 792-0941

INTERSECTION CAPACITY UTILIZATION

Aerojet Avenue-I-10 Fwy EB Ramps @ Flair Drive
Peak hr: SAT MID-DAY
Annual Growth: 0.82%

Phases I & II

N-S St: Aerojet Avenue-I-10 Fwy EB Ramps
E-W St: Flair Drive
Project: Flair Spectrum Project/1-14-4074-1
File: ICU10

Date: 10/22/2014
Date of Count: 2014
Projection Year: 2019

	2014 EXIST. TRAFFIC			2014 EXISTING WITH PROJECT				2014 EXIST. W/PROJECT + MITIGATION				2019 FUTURE WITHOUT PROJECT				2019 FUTURE WITH PROJECT				2019 FUTURE W/PROJECT + MITIGATION			
	1	2	V/C	Added	Total	2	V/C	Added	Total	2	V/C	Added	Total	2	V/C	Added	Total	2	V/C	Added	Total	2	V/C
Movement	Volume	Capacity	Ratio	Volume	Volume	Capacity	Ratio	Volume	Volume	Capacity	Ratio	Volume	Volume	Capacity	Ratio	Volume	Volume	Capacity	Ratio	Volume	Volume	Capacity	Ratio
Nb Left	15	0	0.009	0	15	0	0.009	0	15	0	0.009	1	16	0	0.010	0	16	0	0.010	0	16	0	0.010
Nb Thru	39	1600	0.045 *	0	39	1600	0.045 *	0	39	1600	0.045 *	2	41	1600	0.047 *	0	41	1600	0.047 *	0	41	1600	0.047 *
Nb Right	18	0	-	0	18	0	-	0	18	0	-	1	19	0	-	0	19	0	-	0	19	0	-
Sb Left	43	0	0.027 *	383	426	0	0.266 *	0	426	0	0.266 *	2	45	0	0.028 *	383	428	0	0.267 *	0	428	2880	0.149 *
Sb Thru	25	1600	0.049	0	25	1600	0.289	0	25	1600	0.289	12	37	1600	0.058	0	37	1600	0.298	0	37	0	0.000
Sb Right	11	0	-	0	11	0	-	0	11	0	-	0	11	0	-	0	11	0	-	0	11	0	-
Eb Left	10	0	0.006 *	0	10	0	0.006 *	0	10	0	0.006 *	0	10	0	0.007 *	0	10	0	0.007 *	0	10	0	0.007 *
Eb Thru	14	1600	0.021	0	14	1600	0.021	0	14	1600	0.021	1	15	1600	0.021	0	15	1600	0.021	0	15	1600	0.021
Eb Right	9	0	-	0	9	0	-	0	9	0	-	0	9	0	-	0	9	0	-	0	9	0	-
Wb Left	32	0	0.020	147	179	0	0.112	0	179	0	0.112	1	33	0	0.021	147	180	0	0.113	0	180	0	0.113
Wb Thru	28	1600	0.038 *	0	28	1600	0.129 *	0	28	1600	0.129 *	1	29	1600	0.039 *	0	29	1600	0.131 *	0	29	1600	0.131 *
Wb Right	16	1600	0.010	143	159	1600	0.099	0	159	1600	0.099	1	17	1600	0.010	143	160	1600	0.100	0	160	1600	0.100
Yellow Allowance:			0.100 *				0.100 *				0.100 *				0.100 *				0.100 *				0.100 *
(Existing All-Way Stop Control Intersection)																							
ICU			0.216				0.547				0.547				0.220				0.552				0.433
LOS			A				A				A				A				A				A

** Key conflicting movement as a part of ICU*
1 Counts conducted by.The Traffic Solution
2 Capacity expressed in veh/hour of green

LINSCOTT, LAW & GREENSPAN, ENGINEERS
600 S. Lake Avenue, Suite 500, Pasadena CA 91106
(626) 796.2322 Fax (626) 792-0941

INTERSECTION CAPACITY UTILIZATION

Aerojet Avenue-I-10 Fwy EB Ramps @ Flair Drive
Peak hr: AM
Annual Growth: 0.52%

General Plan Buildout (Phases I & II)

N-S St: Aerojet Avenue-I-10 Fwy EB Ramps
E-W St: Flair Drive
Project: Flair Spectrum Project/1-14-4074-1
File: ICU10

Date: 10/22/2014
Date of Count: 2014
Projection Year: 2035

	2014 EXIST. TRAFFIC			2014 EXISTING WITH PROJECT				2014 EXIST. W/PROJECT + MITIGATION				2035 FUTURE WITHOUT PROJECT				2035 FUTURE WITH PROJECT				2035 FUTURE W/PROJECT + MITIGATION			
	1	2	V/C	Added	Total	2	V/C	Added	Total	2	V/C	Added	Total	2	V/C	Added	Total	2	V/C	Added	Total	2	V/C
Movement	Volume	Capacity	Ratio	Volume	Volume	Capacity	Ratio	Volume	Volume	Capacity	Ratio	Volume	Volume	Capacity	Ratio	Volume	Volume	Capacity	Ratio	Volume	Volume	Capacity	Ratio
Nb Left	54	0	0.034 *	0	54	0	0.034 *	0	54	0	0.034 *	6	60	0	0.038 *	0	60	0	0.038 *	0	60	0	0.038
Nb Thru	77	1600	0.141	0	77	1600	0.141	0	77	1600	0.141	9	86	1600	0.158	0	86	1600	0.158	0	86	1600	0.158 *
Nb Right	95	0	-	0	95	0	-	0	95	0	-	11	106	0	-	0	106	0	-	0	106	0	-
Sb Left	446	0	0.279	104	550	0	0.344	0	550	0	0.344	51	497	0	0.311	104	601	0	0.376	0	601	2880	0.209 *
Sb Thru	255	1600	0.550 *	0	255	1600	0.615 *	0	255	1600	0.615 *	60	315	1600	0.633 *	0	315	1600	0.698 *	0	315	0	0.000
Sb Right	179	0	-	0	179	0	-	0	179	0	-	21	200	0	-	0	200	0	-	0	200	0	-
Eb Left	10	0	0.006 *	0	10	0	0.006 *	0	10	0	0.006 *	1	11	0	0.007 *	0	11	0	0.007 *	0	11	0	0.007 *
Eb Thru	11	1600	0.021	0	11	1600	0.021	0	11	1600	0.021	1	12	1600	0.023	0	12	1600	0.023	0	12	1600	0.023
Eb Right	12	0	-	0	12	0	-	0	12	0	-	1	13	0	-	0	13	0	-	0	13	0	-
Wb Left	106	0	0.066	28	134	0	0.084	0	134	0	0.084	12	118	0	0.074	28	146	0	0.091	0	146	0	0.091
Wb Thru	34	1600	0.088 *	0	34	1600	0.105 *	0	34	1600	0.105 *	4	38	1600	0.098 *	0	38	1600	0.115 *	0	38	1600	0.115 *
Wb Right	18	1600	0.011	38	56	1600	0.035	0	56	1600	0.035	2	20	1600	0.013	38	58	1600	0.036	0	58	1600	0.036
Yellow Allowance:			0.100 *				0.100 *				0.100 *				0.100 *				0.100 *				0.100 *
(Existing All-Way Stop Control Intersection)																							
ICU			0.778				0.860				0.860				0.875				0.957				0.588
LOS			C				D				D				D				E				A

** Key conflicting movement as a part of ICU*
1 Counts conducted by.The Traffic Solution
2 Capacity expressed in veh/hour of green

LINSCOTT, LAW & GREENSPAN, ENGINEERS
600 S. Lake Avenue, Suite 500, Pasadena CA 91106
(626) 796.2322 Fax (626) 792-0941

INTERSECTION CAPACITY UTILIZATION

Aerojet Avenue-I-10 Fwy EB Ramps @ Flair Drive
Peak hr: PM
Annual Growth: 0.52%

General Plan Buildout (Phases I & II)

N-S St: Aerojet Avenue-I-10 Fwy EB Ramps
E-W St: Flair Drive
Project: Flair Spectrum Project/1-14-4074-1
File: ICU10

Date: 10/22/2014
Date of Count: 2014
Projection Year: 2035

	2014 EXIST. TRAFFIC			2014 EXISTING WITH PROJECT				2014 EXIST. W/PROJECT + MITIGATION				2035 FUTURE WITHOUT PROJECT				2035 FUTURE WITH PROJECT				2035 FUTURE W/PROJECT + MITIGATION			
	1	2	V/C	Added	Total	2	V/C	Added	Total	2	V/C	Added	Total	2	V/C	Added	Total	2	V/C	Added	Total	2	V/C
Movement	Volume	Capacity	Ratio	Volume	Volume	Capacity	Ratio	Volume	Volume	Capacity	Ratio	Volume	Volume	Capacity	Ratio	Volume	Volume	Capacity	Ratio	Volume	Volume	Capacity	Ratio
Nb Left	40	0	0.025	0	40	0	0.025	0	40	0	0.025	5	45	0	0.028	0	45	0	0.028	0	45	0	0.028
Nb Thru	314	1600	0.254 *	0	314	1600	0.254 *	0	314	1600	0.254 *	36	350	1600	0.283 *	0	350	1600	0.283 *	0	350	1600	0.283 *
Nb Right	52	0	-	0	52	0	-	0	52	0	-	6	58	0	-	0	58	0	-	0	58	0	-
Sb Left	69	0	0.043 *	257	326	0	0.204 *	0	326	0	0.204 *	8	77	0	0.048 *	257	334	0	0.209 *	0	334	2880	0.116 *
Sb Thru	48	1600	0.086	0	48	1600	0.247	0	48	1600	0.247	27	75	1600	0.109	0	75	1600	0.270	0	75	0	0.000
Sb Right	21	0	-	0	21	0	-	0	21	0	-	2	23	0	-	0	23	0	-	0	23	0	-
Eb Left	83	0	0.052	0	83	0	0.052	0	83	0	0.052	10	93	0	0.058	0	93	0	0.058	0	93	0	0.058
Eb Thru	18	1600	0.107 *	0	18	1600	0.107 *	0	18	1600	0.107 *	2	20	1600	0.119 *	0	20	1600	0.119 *	0	20	1600	0.119 *
Eb Right	70	0	-	0	70	0	-	0	70	0	-	8	78	0	-	0	78	0	-	0	78	0	-
Wb Left	115	0	0.072 *	99	214	0	0.134 *	0	214	0	0.134 *	13	128	0	0.080 *	99	227	0	0.142 *	0	227	0	0.142 *
Wb Thru	47	1600	0.101	0	47	1600	0.163	0	47	1600	0.163	5	52	1600	0.113	0	52	1600	0.175	0	52	1600	0.175
Wb Right	76	1600	0.048	96	172	1600	0.108	0	172	1600	0.108	9	85	1600	0.053	96	181	1600	0.113	0	181	1600	0.113
Yellow Allowance:			0.100 *				0.100 *				0.100 *				0.100 *				0.100 *				0.100 *
(Existing All-Way Stop Control Intersection)																							
ICU			0.576				0.798				0.798				0.630				0.853				0.760
LOS			A				C				C				B				D				C

** Key conflicting movement as a part of ICU*
1 Counts conducted by.The Traffic Solution
2 Capacity expressed in veh/hour of green

LINSCOTT, LAW & GREENSPAN, ENGINEERS
600 S. Lake Avenue, Suite 500, Pasadena CA 91106
(626) 796.2322 Fax (626) 792-0941

INTERSECTION CAPACITY UTILIZATION

Aerojet Avenue-I-10 Fwy EB Ramps @ Flair Drive
Peak hr: SAT MID-DAY
Annual Growth: 0.52%

General Plan Buildout (Phases I & II)

N-S St: Aerojet Avenue-I-10 Fwy EB Ramps
E-W St: Flair Drive
Project: Flair Spectrum Project/1-14-4074-1
File: ICU10

Date: 10/22/2014
Date of Count: 2014
Projection Year: 2035

	2014 EXIST. TRAFFIC			2014 EXISTING WITH PROJECT				2014 EXIST. W/PROJECT + MITIGATION				2035 FUTURE WITHOUT PROJECT				2035 FUTURE WITH PROJECT				2035 FUTURE W/PROJECT + MITIGATION			
Movement	1 Volume	2 Capacity	V/C Ratio	Added Volume	Total Volume	2 Capacity	V/C Ratio	Added Volume	Total Volume	2 Capacity	V/C Ratio	Added Volume	Total Volume	2 Capacity	V/C Ratio	Added Volume	Total Volume	2 Capacity	V/C Ratio	Added Volume	Total Volume	2 Capacity	V/C Ratio
Nb Left	15	0	0.009	0	15	0	0.009	0	15	0	0.009	2	17	0	0.010	0	17	0	0.010	0	17	0	0.010
Nb Thru	39	1600	0.045 *	0	39	1600	0.045 *	0	39	1600	0.045 *	4	43	1600	0.050 *	0	43	1600	0.050 *	0	43	1600	0.050 *
Nb Right	18	0	-	0	18	0	-	0	18	0	-	2	20	0	-	0	20	0	-	0	20	0	-
Sb Left	43	0	0.027 *	383	426	0	0.266 *	0	426	0	0.266 *	5	48	0	0.030 *	383	431	0	0.269 *	0	431	2880	0.150 *
Sb Thru	25	1600	0.049	0	25	1600	0.289	0	25	1600	0.289	14	39	1600	0.062	0	39	1600	0.301	0	39	0	0.000
Sb Right	11	0	-	0	11	0	-	0	11	0	-	1	12	0	-	0	12	0	-	0	12	0	-
Eb Left	10	0	0.006 *	0	10	0	0.006 *	0	10	0	0.006 *	1	11	0	0.007 *	0	11	0	0.007 *	0	11	0	0.007 *
Eb Thru	14	1600	0.021	0	14	1600	0.021	0	14	1600	0.021	2	16	1600	0.023	0	16	1600	0.023	0	16	1600	0.023
Eb Right	9	0	-	0	9	0	-	0	9	0	-	1	10	0	-	0	10	0	-	0	10	0	-
Wb Left	32	0	0.020	147	179	0	0.112	0	179	0	0.112	4	36	0	0.022	147	183	0	0.114	0	183	0	0.114
Wb Thru	28	1600	0.038 *	0	28	1600	0.129 *	0	28	1600	0.129 *	3	31	1600	0.042 *	0	31	1600	0.134 *	0	31	1600	0.134 *
Wb Right	16	1600	0.010	143	159	1600	0.099	0	159	1600	0.099	2	18	1600	0.011	143	161	1600	0.101	0	161	1600	0.101
Yellow Allowance:			0.100 *				0.100 *				0.100 *				0.100 *				0.100 *				0.100 *
(Existing All-Way Stop Control Intersection)																							
ICU			0.216				0.547				0.547				0.229				0.560				0.440
LOS			A				A				A				A				A				A

** Key conflicting movement as a part of ICU*
1 Counts conducted by.The Traffic Solution
2 Capacity expressed in veh/hour of green

Intersection	
Intersection Delay, s/veh	30.2
Intersection LOS	D

Movement	EBU	EBL	EBT	EBR	WBU	WBL	WBT	WBR	NBU	NBL	NBT	NBR
Vol, veh/h	0	411	375	0	0	10	138	66	0	0	14	0
Peak Hour Factor	0.91	0.91	0.91	0.91	0.91	0.91	0.91	0.91	0.91	0.91	0.91	0.91
Heavy Vehicles, %	2	2	2	2	2	2	2	2	2	2	2	2
Mvmt Flow	0	452	412	0	0	11	152	73	0	0	15	0
Number of Lanes	0	0	2	0	0	0	1	0	0	0	1	0

Approach	EB	WB	NB
Opposing Approach	WB	EB	SB
Opposing Lanes	1	2	1
Conflicting Approach Left	SB	NB	EB
Conflicting Lanes Left	1	1	2
Conflicting Approach Right	NB	SB	WB
Conflicting Lanes Right	1	1	1
HCM Control Delay	39.8	11.7	10.1
HCM LOS	E	B	B

Lane	NBLn1	EBLn1	EBLn2	WBLn1	SBLn1
Vol Left, %	0%	77%	0%	5%	35%
Vol Thru, %	100%	23%	100%	64%	6%
Vol Right, %	0%	0%	0%	31%	59%
Sign Control	Stop	Stop	Stop	Stop	Stop
Traffic Vol by Lane	14	536	250	214	185
LT Vol	14	125	250	138	11
Through Vol	0	0	0	66	110
RT Vol	0	411	0	10	64
Lane Flow Rate	15	589	275	235	203
Geometry Grp	2	7	7	5	2
Degree of Util (X)	0.029	0.967	0.422	0.361	0.34
Departure Headway (Hd)	6.858	5.913	5.525	5.526	6.027
Convergence, Y/N	Yes	Yes	Yes	Yes	Yes
Cap	521	613	654	651	598
Service Time	4.908	3.635	3.248	3.555	4.062
HCM Lane V/C Ratio	0.029	0.961	0.42	0.361	0.339
HCM Control Delay	10.1	52.6	12.2	11.7	12.2
HCM Lane LOS	B	F	B	B	B
HCM 95th-tile Q	0.1	13.6	2.1	1.6	1.5

HCM 2010 AWSC
11: Private Driveway/Aerojet Ave & Telstar Ave
Existing Conditions
Weekday AM Peak Hour

Intersection	
Intersection Delay, s/veh	
Intersection LOS	

Movement	SBU	SBL	SBT	SBR
Vol, veh/h	0	64	11	110
Peak Hour Factor	0.91	0.91	0.91	0.91
Heavy Vehicles, %	2	2	2	2
Mvmt Flow	0	70	12	121
Number of Lanes	0	0	1	0

Approach	SB
Opposing Approach	NB
Opposing Lanes	1
Conflicting Approach Left	WB
Conflicting Lanes Left	1
Conflicting Approach Right	EB
Conflicting Lanes Right	2
HCM Control Delay	12.2
HCM LOS	B

Lane

Flair Spectrum Project (1-14-4074-1)
LLG Engineers
Synchro 8 Report
8/21/2014

Intersection	
Intersection Delay, s/veh	43.1
Intersection LOS	E

Movement	EBU	EBL	EBT	EBR	WBU	WBL	WBT	WBR	NBU	NBL	NBT	NBR
Vol, veh/h	0	137	150	0	0	62	498	41	0	0	1	0
Peak Hour Factor	0.93	0.93	0.93	0.93	0.93	0.93	0.93	0.93	0.93	0.93	0.93	0.93
Heavy Vehicles, %	2	2	2	2	2	2	2	2	2	2	2	2
Mvmt Flow	0	147	161	0	0	67	535	44	0	0	1	0
Number of Lanes	0	0	2	0	0	0	1	0	0	0	1	0

Approach	EB	WB	NB
Opposing Approach	WB	EB	SB
Opposing Lanes	1	2	1
Conflicting Approach Left	SB	NB	EB
Conflicting Lanes Left	1	1	2
Conflicting Approach Right	NB	SB	WB
Conflicting Lanes Right	1	1	1
HCM Control Delay	14.5	63	11.2
HCM LOS	B	F	B

Lane	NBLn1	EBLn1	EBLn2	WBLn1	SBLn1
Vol Left, %	0%	73%	0%	10%	6%
Vol Thru, %	100%	27%	100%	83%	13%
Vol Right, %	0%	0%	0%	7%	81%
Sign Control	Stop	Stop	Stop	Stop	Stop
Traffic Vol by Lane	1	187	100	601	481
LT Vol	1	50	100	498	63
Through Vol	0	0	0	41	390
RT Vol	0	137	0	62	28
Lane Flow Rate	1	201	108	646	517
Geometry Grp	2	7	7	5	2
Degree of Util (X)	0.002	0.425	0.216	1	0.861
Departure Headway (Hd)	8.111	7.608	7.241	6.327	5.992
Convergence, Y/N	Yes	Yes	Yes	Yes	Yes
Cap	440	475	496	575	605
Service Time	6.185	5.35	4.983	4.384	4.013
HCM Lane V/C Ratio	0.002	0.423	0.218	1.123	0.855
HCM Control Delay	11.2	15.9	12	63	35.3
HCM Lane LOS	B	C	B	F	E
HCM 95th-tile Q	0	2.1	0.8	14.5	9.6

HCM 2010 AWSC
11: Private Driveway/Aerojet Ave & Telstar Ave
Existing Conditions
Weekday PM Peak Hour

Intersection	
Intersection Delay, s/veh	
Intersection LOS	

Movement	SBU	SBL	SBT	SBR
Vol, veh/h	0	28	63	390
Peak Hour Factor	0.93	0.93	0.93	0.93
Heavy Vehicles, %	2	2	2	2
Mvmt Flow	0	30	68	419
Number of Lanes	0	0	1	0

Approach	SB
Opposing Approach	NB
Opposing Lanes	1
Conflicting Approach Left	WB
Conflicting Lanes Left	1
Conflicting Approach Right	EB
Conflicting Lanes Right	2
HCM Control Delay	35.3
HCM LOS	E

Lane

Flair Spectrum Project (1-14-4074-1)
LLG Engineers
Synchro 8 Report
8/21/2014

Intersection	
Intersection Delay, s/veh	9.1
Intersection LOS	A

Movement	EBU	EBL	EBT	EBR	WBU	WBL	WBT	WBR	NBU	NBL	NBT	NBR
Vol, veh/h	0	99	91	0	0	0	156	7	0	0	0	0
Peak Hour Factor	0.79	0.79	0.79	0.79	0.79	0.79	0.79	0.79	0.79	0.79	0.79	0.79
Heavy Vehicles, %	2	2	2	2	2	2	2	2	2	2	2	2
Mvmt Flow	0	125	115	0	0	0	197	9	0	0	0	0
Number of Lanes	0	0	2	0	0	0	1	0	0	0	1	0

Approach	EB	WB	NB
Opposing Approach	WB	EB	SB
Opposing Lanes	1	2	1
Conflicting Approach Left	SB	NB	EB
Conflicting Lanes Left	1	1	2
Conflicting Approach Right	NB	SB	WB
Conflicting Lanes Right	1	1	1
HCM Control Delay	9.4	9.3	0
HCM LOS	A	A	-

Lane	NBLn1	EBLn1	EBLn2	WBLn1	SBLn1
Vol Left, %	0%	77%	0%	0%	8%
Vol Thru, %	100%	23%	100%	96%	0%
Vol Right, %	0%	0%	0%	4%	92%
Sign Control	Stop	Stop	Stop	Stop	Stop
Traffic Vol by Lane	0	129	61	163	106
LT Vol	0	30	61	156	0
Through Vol	0	0	0	7	97
RT Vol	0	99	0	0	9
Lane Flow Rate	0	164	77	206	134
Geometry Grp	2	7	7	5	2
Degree of Util (X)	0	0.245	0.107	0.264	0.166
Departure Headway (Hd)	5.17	5.389	5.004	4.598	4.45
Convergence, Y/N	Yes	Yes	Yes	Yes	Yes
Cap	0	666	716	780	805
Service Time	3.217	3.122	2.737	2.63	2.481
HCM Lane V/C Ratio	0	0.246	0.108	0.264	0.166
HCM Control Delay	8.2	9.9	8.3	9.3	8.4
HCM Lane LOS	N	A	A	A	A
HCM 95th-tile Q	0	1	0.4	1.1	0.6

HCM 2010 AWSC
11: Private Driveway/Aerojet Ave & Telstar Ave
Existing Conditions
Saturday Mid-day Peak Hour

Intersection	
Intersection Delay, s/veh	
Intersection LOS	

Movement	SBU	SBL	SBT	SBR
Vol, veh/h	0	9	0	97
Peak Hour Factor	0.79	0.79	0.79	0.79
Heavy Vehicles, %	2	2	2	2
Mvmt Flow	0	11	0	123
Number of Lanes	0	0	1	0

Approach	SB
Opposing Approach	NB
Opposing Lanes	1
Conflicting Approach Left	WB
Conflicting Lanes Left	1
Conflicting Approach Right	EB
Conflicting Lanes Right	2
HCM Control Delay	8.4
HCM LOS	A

Lane

Flair Spectrum Project (1-14-4074-1)
LLG Engineers
Synchro 8 Report
8/21/2014

Intersection	
Intersection Delay, s/veh	34.9
Intersection LOS	D

Movement	EBU	EBL	EBT	EBR	WBU	WBL	WBT	WBR	NBU	NBL	NBT	NBR
Vol, veh/h	0	411	546	0	0	10	308	66	0	0	14	0
Peak Hour Factor	0.91	0.91	0.91	0.91	0.91	0.91	0.91	0.91	0.91	0.91	0.91	0.91
Heavy Vehicles, %	2	2	2	2	2	2	2	2	2	2	2	2
Mvmt Flow	0	452	600	0	0	11	338	73	0	0	15	0
Number of Lanes	0	0	2	0	0	0	1	0	0	0	1	0

Approach	EB	WB	NB
Opposing Approach	WB	EB	SB
Opposing Lanes	1	2	1
Conflicting Approach Left	SB	NB	EB
Conflicting Lanes Left	1	1	2
Conflicting Approach Right	NB	SB	WB
Conflicting Lanes Right	1	1	1
HCM Control Delay	46.1	19.8	10.8
HCM LOS	E	C	B

Lane	NBLn1	EBLn1	EBLn2	WBLn1	SBLn1
Vol Left, %	0%	69%	0%	3%	30%
Vol Thru, %	100%	31%	100%	80%	5%
Vol Right, %	0%	0%	0%	17%	65%
Sign Control	Stop	Stop	Stop	Stop	Stop
Traffic Vol by Lane	14	593	364	384	213
LT Vol	14	182	364	308	11
Through Vol	0	0	0	66	138
RT Vol	0	411	0	10	64
Lane Flow Rate	15	652	400	422	234
Geometry Grp	2	7	7	5	2
Degree of Util (X)	0.032	1	0.662	0.674	0.407
Departure Headway (Hd)	7.487	6.311	5.959	5.746	6.374
Convergence, Y/N	Yes	Yes	Yes	Yes	Yes
Cap	480	580	608	633	569
Service Time	5.512	4.025	3.673	3.749	4.374
HCM Lane V/C Ratio	0.031	1.124	0.658	0.667	0.411
HCM Control Delay	10.8	62.4	19.6	19.8	13.7
HCM Lane LOS	B	F	C	C	B
HCM 95th-tile Q	0.1	14.6	4.9	5.2	2

HCM 2010 AWSC
11: Private Driveway/Aerojet Ave & Telstar Ave
Existing with Project
Weekday AM Peak Hour

Intersection	
Intersection Delay, s/veh	
Intersection LOS	

Movement	SBU	SBL	SBT	SBR
Vol, veh/h	0	64	11	138
Peak Hour Factor	0.91	0.91	0.91	0.91
Heavy Vehicles, %	2	2	2	2
Mvmt Flow	0	70	12	152
Number of Lanes	0	0	1	0

Approach	SB
Opposing Approach	NB
Opposing Lanes	1
Conflicting Approach Left	WB
Conflicting Lanes Left	1
Conflicting Approach Right	EB
Conflicting Lanes Right	2
HCM Control Delay	13.7
HCM LOS	B

Lane

Flair Spectrum Specific Plan (1-14-4074-1)
LLG Engineers
Synchro 8 Report
9/29/2014

Intersection	
Intersection Delay, s/veh	58.3
Intersection LOS	F

Movement	EBU	EBL	EBT	EBR	WBU	WBL	WBT	WBR	NBU	NBL	NBT	NBR
Vol, veh/h	0	137	600	0	0	62	932	41	0	0	1	0
Peak Hour Factor	0.93	0.93	0.93	0.93	0.93	0.93	0.93	0.93	0.93	0.93	0.93	0.93
Heavy Vehicles, %	2	2	2	2	2	2	2	2	2	2	2	2
Mvmt Flow	0	147	645	0	0	67	1002	44	0	0	1	0
Number of Lanes	0	0	2	0	0	0	1	0	0	0	1	0

Approach	EB	WB	NB
Opposing Approach	WB	EB	SB
Opposing Lanes	1	2	1
Conflicting Approach Left	SB	NB	EB
Conflicting Lanes Left	1	1	2
Conflicting Approach Right	NB	SB	WB
Conflicting Lanes Right	1	1	1
HCM Control Delay	42.6	66.6	12.6
HCM LOS	E	F	B

Lane	NBLn1	EBLn1	EBLn2	WBLn1	SBLn1
Vol Left, %	0%	41%	0%	6%	5%
Vol Thru, %	100%	59%	100%	90%	11%
Vol Right, %	0%	0%	0%	4%	84%
Sign Control	Stop	Stop	Stop	Stop	Stop
Traffic Vol by Lane	1	337	400	1035	580
LT Vol	1	200	400	932	63
Through Vol	0	0	0	41	489
RT Vol	0	137	0	62	28
Lane Flow Rate	1	362	430	1113	624
Geometry Grp	2	7	7	5	2
Degree of Util (X)	0.003	0.789	0.912	1	1
Departure Headway (Hd)	9.578	7.838	7.635	7.037	6.454
Convergence, Y/N	Yes	Yes	Yes	Yes	Yes
Cap	376	464	477	523	561
Service Time	7.578	5.54	5.337	5.1	4.516
HCM Lane V/C Ratio	0.003	0.78	0.901	2.128	1.112
HCM Control Delay	12.6	34	49.9	66.6	63.7
HCM Lane LOS	B	D	E	F	F
HCM 95th-tile Q	0	7.1	10.4	13.8	14.4

HCM 2010 AWSC
11: Private Driveway/Aerojet Ave & Telstar Ave
Existing with Project
Weekday PM Peak Hour

Intersection	
Intersection Delay, s/veh	
Intersection LOS	

Movement	SBU	SBL	SBT	SBR
Vol, veh/h	0	28	63	489
Peak Hour Factor	0.93	0.93	0.93	0.93
Heavy Vehicles, %	2	2	2	2
Mvmt Flow	0	30	68	526
Number of Lanes	0	0	1	0

Approach	SB
Opposing Approach	NB
Opposing Lanes	1
Conflicting Approach Left	WB
Conflicting Lanes Left	1
Conflicting Approach Right	EB
Conflicting Lanes Right	2
HCM Control Delay	63.7
HCM LOS	F

Lane

Flair Spectrum Specific Plan (1-14-4074-1)
LLG Engineers
Synchro 8 Report
9/29/2014

Intersection	
Intersection Delay, s/veh	51
Intersection LOS	F

Movement	EBU	EBL	EBT	EBR	WBU	WBL	WBT	WBR	NBU	NBL	NBT	NBR
Vol, veh/h	0	99	751	0	0	0	815	7	0	0	0	0
Peak Hour Factor	0.79	0.79	0.79	0.79	0.79	0.79	0.79	0.79	0.79	0.79	0.79	0.79
Heavy Vehicles, %	2	2	2	2	2	2	2	2	2	2	2	2
Mvmt Flow	0	125	951	0	0	0	1032	9	0	0	0	0
Number of Lanes	0	0	2	0	0	0	1	0	0	0	1	0

Approach	EB	WB	NB
Opposing Approach	WB	EB	SB
Opposing Lanes	1	2	1
Conflicting Approach Left	SB	NB	EB
Conflicting Lanes Left	1	1	2
Conflicting Approach Right	NB	SB	WB
Conflicting Lanes Right	1	1	1
HCM Control Delay	50.5	61.8	0
HCM LOS	F	F	-

Lane	NBLn1	EBLn1	EBLn2	WBLn1	SBLn1
Vol Left, %	0%	28%	0%	0%	4%
Vol Thru, %	100%	72%	100%	99%	0%
Vol Right, %	0%	0%	0%	1%	96%
Sign Control	Stop	Stop	Stop	Stop	Stop
Traffic Vol by Lane	0	349	501	822	253
LT Vol	0	250	501	815	0
Through Vol	0	0	0	7	244
RT Vol	0	99	0	0	9
Lane Flow Rate	0	442	634	1041	320
Geometry Grp	2	7	7	5	2
Degree of Util (X)	0	0.81	1	1	0.574
Departure Headway (Hd)	8.443	6.593	6.451	6.086	6.457
Convergence, Y/N	Yes	Yes	Yes	Yes	Yes
Cap	0	548	558	603	564
Service Time	6.521	4.372	4.23	4.156	4.457
HCM Lane V/C Ratio	0	0.807	1.136	1.726	0.567
HCM Control Delay	11.5	31.9	63.4	61.8	17.8
HCM Lane LOS	N	D	F	F	C
HCM 95th-tile Q	0	7.9	14.4	14.8	3.6

Intersection	
Intersection Delay, s/veh	
Intersection LOS	

Movement	SBU	SBL	SBT	SBR
Vol, veh/h	0	9	0	244
Peak Hour Factor	0.79	0.79	0.79	0.79
Heavy Vehicles, %	2	2	2	2
Mvmt Flow	0	11	0	309
Number of Lanes	0	0	1	0

Approach	SB
Opposing Approach	NB
Opposing Lanes	1
Conflicting Approach Left	WB
Conflicting Lanes Left	1
Conflicting Approach Right	EB
Conflicting Lanes Right	2
HCM Control Delay	17.8
HCM LOS	C

Lane

Intersection	
Intersection Delay, s/veh	33.7
Intersection LOS	D

Movement	EBU	EBL	EBT	EBR	WBU	WBL	WBT	WBR	NBU	NBL	NBT	NBR
Vol, veh/h	0	418	434	0	0	10	162	67	0	0	14	0
Peak Hour Factor	0.91	0.91	0.91	0.91	0.91	0.91	0.91	0.91	0.91	0.91	0.91	0.91
Heavy Vehicles, %	2	2	2	2	2	2	2	2	2	2	2	2
Mvmt Flow	0	459	477	0	0	11	178	74	0	0	15	0
Number of Lanes	0	0	2	0	0	0	1	0	0	0	1	0

Approach	EB	WB	NB
Opposing Approach	WB	EB	SB
Opposing Lanes	1	2	1
Conflicting Approach Left	SB	NB	EB
Conflicting Lanes Left	1	1	2
Conflicting Approach Right	NB	SB	WB
Conflicting Lanes Right	1	1	1
HCM Control Delay	45.3	12.6	10.3
HCM LOS	E	B	B

Lane	NBLn1	EBLn1	EBLn2	WBLn1	SBLn1
Vol Left, %	0%	74%	0%	4%	44%
Vol Thru, %	100%	26%	100%	68%	5%
Vol Right, %	0%	0%	0%	28%	51%
Sign Control	Stop	Stop	Stop	Stop	Stop
Traffic Vol by Lane	14	563	289	239	219
LT Vol	14	145	289	162	11
Through Vol	0	0	0	67	112
RT Vol	0	418	0	10	96
Lane Flow Rate	15	618	318	263	241
Geometry Grp	2	7	7	5	2
Degree of Util (X)	0.03	1	0.507	0.409	0.408
Departure Headway (Hd)	7.04	6.118	5.742	5.601	6.108
Convergence, Y/N	Yes	Yes	Yes	Yes	Yes
Cap	512	600	633	638	590
Service Time	5.04	3.818	3.442	3.684	4.144
HCM Lane V/C Ratio	0.029	1.03	0.502	0.412	0.408
HCM Control Delay	10.3	61.3	14.2	12.6	13.3
HCM Lane LOS	B	F	B	B	B
HCM 95th-tile Q	0.1	14.9	2.9	2	2

HCM 2010 AWSC
11: Private Driveway/Aerojet Ave & Telstar Ave
2016 Future Pre-Project
Weekday AM Peak Hour

Intersection	
Intersection Delay, s/veh	
Intersection LOS	

Movement	SBU	SBL	SBT	SBR
Vol, veh/h	0	96	11	112
Peak Hour Factor	0.91	0.91	0.91	0.91
Heavy Vehicles, %	2	2	2	2
Mvmt Flow	0	105	12	123
Number of Lanes	0	0	1	0

Approach	SB
Opposing Approach	NB
Opposing Lanes	1
Conflicting Approach Left	WB
Conflicting Lanes Left	1
Conflicting Approach Right	EB
Conflicting Lanes Right	2
HCM Control Delay	13.3
HCM LOS	B

Lane

Flair Spectrum Specific Plan (1-14-4074-1)
LLG Engineers
Synchro 8 Report
9/23/2014

Intersection	
Intersection Delay, s/veh	46.2
Intersection LOS	E

Movement	EBU	EBL	EBT	EBR	WBU	WBL	WBT	WBR	NBU	NBL	NBT	NBR
Vol, veh/h	0	139	187	0	0	63	536	42	0	0	1	0
Peak Hour Factor	0.93	0.93	0.93	0.93	0.93	0.93	0.93	0.93	0.93	0.93	0.93	0.93
Heavy Vehicles, %	2	2	2	2	2	2	2	2	2	2	2	2
Mvmt Flow	0	149	201	0	0	68	576	45	0	0	1	0
Number of Lanes	0	0	2	0	0	0	1	0	0	0	1	0

Approach	EB	WB	NB
Opposing Approach	WB	EB	SB
Opposing Lanes	1	2	1
Conflicting Approach Left	SB	NB	EB
Conflicting Lanes Left	1	1	2
Conflicting Approach Right	NB	SB	WB
Conflicting Lanes Right	1	1	1
HCM Control Delay	15.5	64	11.5
HCM LOS	C	F	B

Lane	NBLn1	EBLn1	EBLn2	WBLn1	SBLn1
Vol Left, %	0%	69%	0%	10%	10%
Vol Thru, %	100%	31%	100%	84%	13%
Vol Right, %	0%	0%	0%	7%	78%
Sign Control	Stop	Stop	Stop	Stop	Stop
Traffic Vol by Lane	1	201	125	641	509
LT Vol	1	62	125	536	64
Through Vol	0	0	0	42	396
RT Vol	0	139	0	63	49
Lane Flow Rate	1	216	134	689	547
Geometry Grp	2	7	7	5	2
Degree of Util (X)	0.003	0.467	0.276	1	0.914
Departure Headway (Hd)	8.395	7.767	7.422	6.555	6.121
Convergence, Y/N	Yes	Yes	Yes	Yes	Yes
Cap	426	468	487	558	597
Service Time	6.451	5.469	5.124	4.585	4.121
HCM Lane V/C Ratio	0.002	0.462	0.275	1.235	0.916
HCM Control Delay	11.5	17.1	12.9	64	43.5
HCM Lane LOS	B	C	B	F	E
HCM 95th-tile Q	0	2.4	1.1	14.3	11.4

HCM 2010 AWSC
11: Private Driveway/Aerojet Ave & Telstar Ave
2016 Future Pre-Project
Weekday PM Peak Hour

Intersection	
Intersection Delay, s/veh	
Intersection LOS	

Movement	SBU	SBL	SBT	SBR
Vol, veh/h	0	49	64	396
Peak Hour Factor	0.93	0.93	0.93	0.93
Heavy Vehicles, %	2	2	2	2
Mvmt Flow	0	53	69	426
Number of Lanes	0	0	1	0

Approach	SB
Opposing Approach	NB
Opposing Lanes	1
Conflicting Approach Left	WB
Conflicting Lanes Left	1
Conflicting Approach Right	EB
Conflicting Lanes Right	2
HCM Control Delay	43.5
HCM LOS	E

Lane

Flair Spectrum Specific Plan (1-14-4074-1)
LLG Engineers
Synchro 8 Report
9/23/2014

Intersection	
Intersection Delay, s/veh	9.5
Intersection LOS	A

Movement	EBU	EBL	EBT	EBR	WBU	WBL	WBT	WBR	NBU	NBL	NBT	NBR
Vol, veh/h	0	101	111	0	0	0	177	7	0	0	0	0
Peak Hour Factor	0.79	0.79	0.79	0.79	0.79	0.79	0.79	0.79	0.79	0.79	0.79	0.79
Heavy Vehicles, %	2	2	2	2	2	2	2	2	2	2	2	2
Mvmt Flow	0	128	141	0	0	0	224	9	0	0	0	0
Number of Lanes	0	0	2	0	0	0	1	0	0	0	1	0

Approach	EB	WB	NB
Opposing Approach	WB	EB	SB
Opposing Lanes	1	2	1
Conflicting Approach Left	SB	NB	EB
Conflicting Lanes Left	1	1	2
Conflicting Approach Right	NB	SB	WB
Conflicting Lanes Right	1	1	1
HCM Control Delay	9.6	9.8	0
HCM LOS	A	A	-

Lane	NBLn1	EBLn1	EBLn2	WBLn1	SBLn1
Vol Left, %	0%	73%	0%	0%	17%
Vol Thru, %	100%	27%	100%	96%	0%
Vol Right, %	0%	0%	0%	4%	83%
Sign Control	Stop	Stop	Stop	Stop	Stop
Traffic Vol by Lane	0	138	74	184	119
LT Vol	0	37	74	177	0
Through Vol	0	0	0	7	99
RT Vol	0	101	0	0	20
Lane Flow Rate	0	175	94	233	151
Geometry Grp	2	7	7	5	2
Degree of Util (X)	0	0.265	0.132	0.303	0.194
Departure Headway (Hd)	5.33	5.451	5.083	4.684	4.639
Convergence, Y/N	Yes	Yes	Yes	Yes	Yes
Cap	0	659	703	766	771
Service Time	3.391	3.193	2.825	2.725	2.678
HCM Lane V/C Ratio	0	0.266	0.134	0.304	0.196
HCM Control Delay	8.4	10.2	8.6	9.8	8.8
HCM Lane LOS	N	B	A	A	A
HCM 95th-tile Q	0	1.1	0.5	1.3	0.7

HCM 2010 AWSC
11: Private Driveway/Aerojet Ave & Telstar Ave
2016 Future Pre-Project
Saturday Mid-day Peak Hour

Intersection	
Intersection Delay, s/veh	
Intersection LOS	

Movement	SBU	SBL	SBT	SBR
Vol, veh/h	0	20	0	99
Peak Hour Factor	0.79	0.79	0.79	0.79
Heavy Vehicles, %	2	2	2	2
Mvmt Flow	0	25	0	125
Number of Lanes	0	0	1	0

Approach	SB
Opposing Approach	NB
Opposing Lanes	1
Conflicting Approach Left	WB
Conflicting Lanes Left	1
Conflicting Approach Right	EB
Conflicting Lanes Right	2
HCM Control Delay	8.8
HCM LOS	A

Lane

Flair Spectrum Specific Plan (1-14-4074-1)
LLG Engineers
Synchro 8 Report
9/23/2014

Intersection	
Intersection Delay, s/veh	35.5
Intersection LOS	E

Movement	EBU	EBL	EBT	EBR	WBU	WBL	WBT	WBR	NBU	NBL	NBT	NBR
Vol, veh/h	0	418	588	0	0	10	232	67	0	0	14	0
Peak Hour Factor	0.91	0.91	0.91	0.91	0.91	0.91	0.91	0.91	0.91	0.91	0.91	0.91
Heavy Vehicles, %	2	2	2	2	2	2	2	2	2	2	2	2
Mvmt Flow	0	459	646	0	0	11	255	74	0	0	15	0
Number of Lanes	0	0	2	0	0	0	1	0	0	0	1	0

Approach	EB	WB	NB
Opposing Approach	WB	EB	SB
Opposing Lanes	1	2	1
Conflicting Approach Left	SB	NB	EB
Conflicting Lanes Left	1	1	2
Conflicting Approach Right	NB	SB	WB
Conflicting Lanes Right	1	1	1
HCM Control Delay	46.9	15.9	10.7
HCM LOS	E	C	B

Lane	NBLn1	EBLn1	EBLn2	WBLn1	SBLn1
Vol Left, %	0%	68%	0%	3%	39%
Vol Thru, %	100%	32%	100%	75%	4%
Vol Right, %	0%	0%	0%	22%	57%
Sign Control	Stop	Stop	Stop	Stop	Stop
Traffic Vol by Lane	14	614	392	309	247
LT Vol	14	196	392	232	11
Through Vol	0	0	0	67	140
RT Vol	0	418	0	10	96
Lane Flow Rate	15	675	431	340	271
Geometry Grp	2	7	7	5	2
Degree of Util (X)	0.032	1	0.717	0.553	0.466
Departure Headway (Hd)	7.393	6.341	5.996	5.859	6.187
Convergence, Y/N	Yes	Yes	Yes	Yes	Yes
Cap	486	574	607	618	575
Service Time	5.413	4.054	3.708	3.861	4.287
HCM Lane V/C Ratio	0.031	1.176	0.71	0.55	0.471
HCM Control Delay	10.7	62.5	22.4	15.9	14.7
HCM Lane LOS	B	F	C	C	B
HCM 95th-tile Q	0.1	14.6	5.9	3.4	2.5

HCM 2010 AWSC
11: Private Driveway/Aerojet Ave & Telstar Ave
2016 Future with Project
Weekday AM Peak Hour

Intersection	
Intersection Delay, s/veh	
Intersection LOS	

Movement	SBU	SBL	SBT	SBR
Vol, veh/h	0	96	11	140
Peak Hour Factor	0.91	0.91	0.91	0.91
Heavy Vehicles, %	2	2	2	2
Mvmt Flow	0	105	12	154
Number of Lanes	0	0	1	0

Approach	SB
Opposing Approach	NB
Opposing Lanes	1
Conflicting Approach Left	WB
Conflicting Lanes Left	1
Conflicting Approach Right	EB
Conflicting Lanes Right	2
HCM Control Delay	14.7
HCM LOS	B

Lane

Flair Spectrum Specific Plan (1-14-4074-1)
LLG Engineers
Synchro 8 Report
9/23/2014

Intersection	
Intersection Delay, s/veh	56.7
Intersection LOS	F

Movement	EBU	EBL	EBT	EBR	WBU	WBL	WBT	WBR	NBU	NBL	NBT	NBR
Vol, veh/h	0	139	559	0	0	63	922	42	0	0	1	0
Peak Hour Factor	0.93	0.93	0.93	0.93	0.93	0.93	0.93	0.93	0.93	0.93	0.93	0.93
Heavy Vehicles, %	2	2	2	2	2	2	2	2	2	2	2	2
Mvmt Flow	0	149	601	0	0	68	991	45	0	0	1	0
Number of Lanes	0	0	2	0	0	0	1	0	0	0	1	0

Approach	EB	WB	NB
Opposing Approach	WB	EB	SB
Opposing Lanes	1	2	1
Conflicting Approach Left	SB	NB	EB
Conflicting Lanes Left	1	1	2
Conflicting Approach Right	NB	SB	WB
Conflicting Lanes Right	1	1	1
HCM Control Delay	36.3	66.5	12.6
HCM LOS	E	F	B

Lane	NBLn1	EBLn1	EBLn2	WBLn1	SBLn1
Vol Left, %	0%	43%	0%	6%	8%
Vol Thru, %	100%	57%	100%	90%	11%
Vol Right, %	0%	0%	0%	4%	81%
Sign Control	Stop	Stop	Stop	Stop	Stop
Traffic Vol by Lane	1	325	373	1027	608
LT Vol	1	186	373	922	64
Through Vol	0	0	0	42	495
RT Vol	0	139	0	63	49
Lane Flow Rate	1	350	401	1104	654
Geometry Grp	2	7	7	5	2
Degree of Util (X)	0.003	0.763	0.85	1	1
Departure Headway (Hd)	9.534	7.849	7.635	7.014	6.454
Convergence, Y/N	Yes	Yes	Yes	Yes	Yes
Cap	378	465	477	530	562
Service Time	7.534	5.551	5.337	5.079	4.52
HCM Lane V/C Ratio	0.003	0.753	0.841	2.083	1.164
HCM Control Delay	12.6	31.7	40.3	66.5	63.7
HCM Lane LOS	B	D	E	F	F
HCM 95th-tile Q	0	6.5	8.6	13.8	14.4

HCM 2010 AWSC
11: Private Driveway/Aerojet Ave & Telstar Ave
2016 with Project
Weekday PM Peak Hour

Intersection	
Intersection Delay, s/veh	
Intersection LOS	

Movement	SBU	SBL	SBT	SBR
Vol, veh/h	0	49	64	495
Peak Hour Factor	0.93	0.93	0.93	0.93
Heavy Vehicles, %	2	2	2	2
Mvmt Flow	0	53	69	532
Number of Lanes	0	0	1	0

Approach	SB
Opposing Approach	NB
Opposing Lanes	1
Conflicting Approach Left	WB
Conflicting Lanes Left	1
Conflicting Approach Right	EB
Conflicting Lanes Right	2
HCM Control Delay	63.7
HCM LOS	F

Lane

Flair Spectrum Specific Plan (1-14-4074-1)
LLG Engineers
Synchro 8 Report
9/23/2014

Intersection	
Intersection Delay, s/veh	50.9
Intersection LOS	F

Movement	EBU	EBL	EBT	EBR	WBU	WBL	WBT	WBR	NBU	NBL	NBT	NBR
Vol, veh/h	0	101	714	0	0	0	777	7	0	0	0	0
Peak Hour Factor	0.79	0.79	0.79	0.79	0.79	0.79	0.79	0.79	0.79	0.79	0.79	0.79
Heavy Vehicles, %	2	2	2	2	2	2	2	2	2	2	2	2
Mvmt Flow	0	128	904	0	0	0	984	9	0	0	0	0
Number of Lanes	0	0	2	0	0	0	1	0	0	0	1	0

Approach	EB	WB	NB
Opposing Approach	WB	EB	SB
Opposing Lanes	1	2	1
Conflicting Approach Left	SB	NB	EB
Conflicting Lanes Left	1	1	2
Conflicting Approach Right	NB	SB	WB
Conflicting Lanes Right	1	1	1
HCM Control Delay	50.5	62.2	0
HCM LOS	F	F	-

Lane	NBLn1	EBLn1	EBLn2	WBLn1	SBLn1
Vol Left, %	0%	30%	0%	0%	8%
Vol Thru, %	100%	70%	100%	99%	0%
Vol Right, %	0%	0%	0%	1%	92%
Sign Control	Stop	Stop	Stop	Stop	Stop
Traffic Vol by Lane	0	339	476	784	266
LT Vol	0	238	476	777	0
Through Vol	0	0	0	7	246
RT Vol	0	101	0	0	20
Lane Flow Rate	0	429	603	992	337
Geometry Grp	2	7	7	5	2
Degree of Util (X)	0	0.806	1	1	0.606
Departure Headway (Hd)	8.605	6.763	6.614	6.221	6.479
Convergence, Y/N	Yes	Yes	Yes	Yes	Yes
Cap	0	541	554	595	559
Service Time	6.605	4.463	4.314	4.23	4.489
HCM Lane V/C Ratio	0	0.793	1.088	1.667	0.603
HCM Control Delay	11.6	31.8	63.9	62.2	19
HCM Lane LOS	N	D	F	F	C
HCM 95th-tile Q	0	7.8	14.3	14.7	4

HCM 2010 AWSC
11: Private Driveway/Aerojet Ave & Telstar Ave
2016 with Project
Saturday Mid-day Peak Hour

Intersection	
Intersection Delay, s/veh	
Intersection LOS	

Movement	SBU	SBL	SBT	SBR
Vol, veh/h	0	20	0	246
Peak Hour Factor	0.79	0.79	0.79	0.79
Heavy Vehicles, %	2	2	2	2
Mvmt Flow	0	25	0	311
Number of Lanes	0	0	1	0

Approach	SB
Opposing Approach	NB
Opposing Lanes	1
Conflicting Approach Left	WB
Conflicting Lanes Left	1
Conflicting Approach Right	EB
Conflicting Lanes Right	2
HCM Control Delay	19
HCM LOS	C

Lane

Flair Spectrum Specific Plan (1-14-4074-1)
LLG Engineers
Synchro 8 Report
9/23/2014

Intersection	
Intersection Delay, s/veh	34
Intersection LOS	D

Movement	EBU	EBL	EBT	EBR	WBU	WBL	WBT	WBR	NBU	NBL	NBT	NBR
Vol, veh/h	0	428	444	0	0	10	166	69	0	0	15	0
Peak Hour Factor	0.91	0.91	0.91	0.91	0.91	0.91	0.91	0.91	0.91	0.91	0.91	0.91
Heavy Vehicles, %	2	2	2	2	2	2	2	2	2	2	2	2
Mvmt Flow	0	470	488	0	0	11	182	76	0	0	16	0
Number of Lanes	0	0	2	0	0	0	1	0	0	0	1	0

Approach	EB	WB	NB
Opposing Approach	WB	EB	SB
Opposing Lanes	1	2	1
Conflicting Approach Left	SB	NB	EB
Conflicting Lanes Left	1	1	2
Conflicting Approach Right	NB	SB	WB
Conflicting Lanes Right	1	1	1
HCM Control Delay	45.6	12.8	10.3
HCM LOS	E	B	B

Lane	NBLn1	EBLn1	EBLn2	WBLn1	SBLn1
Vol Left, %	0%	74%	0%	4%	44%
Vol Thru, %	100%	26%	100%	68%	5%
Vol Right, %	0%	0%	0%	28%	51%
Sign Control	Stop	Stop	Stop	Stop	Stop
Traffic Vol by Lane	15	576	296	245	224
LT Vol	15	148	296	166	11
Through Vol	0	0	0	69	115
RT Vol	0	428	0	10	98
Lane Flow Rate	16	633	325	269	246
Geometry Grp	2	7	7	5	2
Degree of Util (X)	0.032	1	0.523	0.422	0.421
Departure Headway (Hd)	6.993	6.163	5.787	5.646	6.15
Convergence, Y/N	Yes	Yes	Yes	Yes	Yes
Cap	508	595	628	633	588
Service Time	5.087	3.863	3.487	3.719	4.163
HCM Lane V/C Ratio	0.031	1.064	0.518	0.425	0.418
HCM Control Delay	10.3	61.5	14.7	12.8	13.6
HCM Lane LOS	B	F	B	B	B
HCM 95th-tile Q	0.1	14.8	3	2.1	2.1

HCM 2010 AWSC
11: Private Driveway/Aerojet Ave & Telstar Ave
2019 Future Pre-Project
Weekday AM Peak Hour

Intersection	
Intersection Delay, s/veh	
Intersection LOS	

Movement	SBU	SBL	SBT	SBR
Vol, veh/h	0	98	11	115
Peak Hour Factor	0.91	0.91	0.91	0.91
Heavy Vehicles, %	2	2	2	2
Mvmt Flow	0	108	12	126
Number of Lanes	0	0	1	0

Approach	SB
Opposing Approach	NB
Opposing Lanes	1
Conflicting Approach Left	WB
Conflicting Lanes Left	1
Conflicting Approach Right	EB
Conflicting Lanes Right	2
HCM Control Delay	13.6
HCM LOS	B

Lane

Flair Spectrum Specific Plan (1-14-4074-1)
LLG Engineers
Synchro 8 Report
9/23/2014

Intersection	
Intersection Delay, s/veh	48.2
Intersection LOS	E

Movement	EBU	EBL	EBT	EBR	WBU	WBL	WBT	WBR	NBU	NBL	NBT	NBR
Vol, veh/h	0	143	191	0	0	65	549	43	0	0	1	0
Peak Hour Factor	0.93	0.93	0.93	0.93	0.93	0.93	0.93	0.93	0.93	0.93	0.93	0.93
Heavy Vehicles, %	2	2	2	2	2	2	2	2	2	2	2	2
Mvmt Flow	0	154	205	0	0	70	590	46	0	0	1	0
Number of Lanes	0	0	2	0	0	0	1	0	0	0	1	0

Approach	EB	WB	NB
Opposing Approach	WB	EB	SB
Opposing Lanes	1	2	1
Conflicting Approach Left	SB	NB	EB
Conflicting Lanes Left	1	1	2
Conflicting Approach Right	NB	SB	WB
Conflicting Lanes Right	1	1	1
HCM Control Delay	16	64.4	11.6
HCM LOS	C	F	B

Lane	NBLn1	EBLn1	EBLn2	WBLn1	SBLn1
Vol Left, %	0%	69%	0%	10%	10%
Vol Thru, %	100%	31%	100%	84%	13%
Vol Right, %	0%	0%	0%	7%	78%
Sign Control	Stop	Stop	Stop	Stop	Stop
Traffic Vol by Lane	1	207	127	657	522
LT Vol	1	64	127	549	66
Through Vol	0	0	0	43	406
RT Vol	0	143	0	65	50
Lane Flow Rate	1	222	137	706	561
Geometry Grp	2	7	7	5	2
Degree of Util (X)	0.003	0.484	0.285	1	0.94
Departure Headway (Hd)	8.489	7.836	7.49	6.634	6.141
Convergence, Y/N	Yes	Yes	Yes	Yes	Yes
Cap	421	462	482	551	595
Service Time	6.548	5.538	5.192	4.665	4.141
HCM Lane V/C Ratio	0.002	0.481	0.284	1.281	0.943
HCM Control Delay	11.6	17.7	13.2	64.4	48.4
HCM Lane LOS	B	C	B	F	E
HCM 95th-tile Q	0	2.6	1.2	14.2	12.3

HCM 2010 AWSC
11: Private Driveway/Aerojet Ave & Telstar Ave
2019 Future Pre-Project
Weekday PM Peak Hour

Intersection	
Intersection Delay, s/veh	
Intersection LOS	

Movement	SBU	SBL	SBT	SBR
Vol, veh/h	0	50	66	406
Peak Hour Factor	0.93	0.93	0.93	0.93
Heavy Vehicles, %	2	2	2	2
Mvmt Flow	0	54	71	437
Number of Lanes	0	0	1	0

Approach	SB
Opposing Approach	NB
Opposing Lanes	1
Conflicting Approach Left	WB
Conflicting Lanes Left	1
Conflicting Approach Right	EB
Conflicting Lanes Right	2
HCM Control Delay	48.4
HCM LOS	E

Lane

Flair Spectrum Specific Plan (1-14-4074-1)
LLG Engineers
Synchro 8 Report
9/23/2014

Intersection	
Intersection Delay, s/veh	9.5
Intersection LOS	A

Movement	EBU	EBL	EBT	EBR	WBU	WBL	WBT	WBR	NBU	NBL	NBT	NBR
Vol, veh/h	0	103	114	0	0	0	181	7	0	0	0	0
Peak Hour Factor	0.79	0.79	0.79	0.79	0.79	0.79	0.79	0.79	0.79	0.79	0.79	0.79
Heavy Vehicles, %	2	2	2	2	2	2	2	2	2	2	2	2
Mvmt Flow	0	130	144	0	0	0	229	9	0	0	0	0
Number of Lanes	0	0	2	0	0	0	1	0	0	0	1	0

Approach	EB	WB	NB
Opposing Approach	WB	EB	SB
Opposing Lanes	1	2	1
Conflicting Approach Left	SB	NB	EB
Conflicting Lanes Left	1	1	2
Conflicting Approach Right	NB	SB	WB
Conflicting Lanes Right	1	1	1
HCM Control Delay	9.6	9.9	0
HCM LOS	A	A	-

Lane	NBLn1	EBLn1	EBLn2	WBLn1	SBLn1
Vol Left, %	0%	73%	0%	0%	17%
Vol Thru, %	100%	27%	100%	96%	0%
Vol Right, %	0%	0%	0%	4%	83%
Sign Control	Stop	Stop	Stop	Stop	Stop
Traffic Vol by Lane	0	141	76	188	121
LT Vol	0	38	76	181	0
Through Vol	0	0	0	7	101
RT Vol	0	103	0	0	20
Lane Flow Rate	0	178	96	238	153
Geometry Grp	2	7	7	5	2
Degree of Util (X)	0	0.271	0.136	0.311	0.198
Departure Headway (Hd)	5.362	5.462	5.094	4.698	4.662
Convergence, Y/N	Yes	Yes	Yes	Yes	Yes
Cap	0	657	702	764	767
Service Time	3.426	3.207	2.839	2.742	2.703
HCM Lane V/C Ratio	0	0.271	0.137	0.312	0.199
HCM Control Delay	8.4	10.2	8.6	9.9	8.9
HCM Lane LOS	N	B	A	A	A
HCM 95th-tile Q	0	1.1	0.5	1.3	0.7

Intersection	
Intersection Delay, s/veh	
Intersection LOS	

Movement	SBU	SBL	SBT	SBR
Vol, veh/h	0	20	0	101
Peak Hour Factor	0.79	0.79	0.79	0.79
Heavy Vehicles, %	2	2	2	2
Mvmt Flow	0	25	0	128
Number of Lanes	0	0	1	0

Approach	SB
Opposing Approach	NB
Opposing Lanes	1
Conflicting Approach Left	WB
Conflicting Lanes Left	1
Conflicting Approach Right	EB
Conflicting Lanes Right	2
HCM Control Delay	8.9
HCM LOS	A

Lane

Intersection	
Intersection Delay, s/veh	38.6
Intersection LOS	E

Movement	EBU	EBL	EBT	EBR	WBU	WBL	WBT	WBR	NBU	NBL	NBT	NBR
Vol, veh/h	0	428	615	0	0	10	336	69	0	0	15	0
Peak Hour Factor	0.91	0.91	0.91	0.91	0.91	0.91	0.91	0.91	0.91	0.91	0.91	0.91
Heavy Vehicles, %	2	2	2	2	2	2	2	2	2	2	2	2
Mvmt Flow	0	470	676	0	0	11	369	76	0	0	16	0
Number of Lanes	0	0	2	0	0	0	1	0	0	0	1	0

Approach	EB	WB	NB
Opposing Approach	WB	EB	SB
Opposing Lanes	1	2	1
Conflicting Approach Left	SB	NB	EB
Conflicting Lanes Left	1	1	2
Conflicting Approach Right	NB	SB	WB
Conflicting Lanes Right	1	1	1
HCM Control Delay	49.8	25.1	11.2
HCM LOS	E	D	B

Lane	NBLn1	EBLn1	EBLn2	WBLn1	SBLn1
Vol Left, %	0%	68%	0%	2%	39%
Vol Thru, %	100%	32%	100%	81%	4%
Vol Right, %	0%	0%	0%	17%	57%
Sign Control	Stop	Stop	Stop	Stop	Stop
Traffic Vol by Lane	15	633	410	415	252
LT Vol	15	205	410	336	11
Through Vol	0	0	0	69	143
RT Vol	0	428	0	10	98
Lane Flow Rate	16	696	451	456	277
Geometry Grp	2	7	7	5	2
Degree of Util (X)	0.036	1	0.782	0.755	0.502
Departure Headway (Hd)	7.822	6.596	6.251	5.96	6.528
Convergence, Y/N	Yes	Yes	Yes	Yes	Yes
Cap	458	550	581	607	554
Service Time	5.873	4.336	3.991	3.984	4.551
HCM Lane V/C Ratio	0.035	1.265	0.776	0.751	0.5
HCM Control Delay	11.2	64	27.9	25.1	16
HCM Lane LOS	B	F	D	D	C
HCM 95th-tile Q	0.1	14.3	7.3	6.8	2.8

HCM 2010 AWSC
11: Private Driveway/Aerojet Ave & Telstar Ave
2019 Future with Project
Weekday AM Peak Hour

Intersection	
Intersection Delay, s/veh	
Intersection LOS	

Movement	SBU	SBL	SBT	SBR
Vol, veh/h	0	98	11	143
Peak Hour Factor	0.91	0.91	0.91	0.91
Heavy Vehicles, %	2	2	2	2
Mvmt Flow	0	108	12	157
Number of Lanes	0	0	1	0

Approach	SB
Opposing Approach	NB
Opposing Lanes	1
Conflicting Approach Left	WB
Conflicting Lanes Left	1
Conflicting Approach Right	EB
Conflicting Lanes Right	2
HCM Control Delay	16
HCM LOS	C

Lane

Flair Spectrum Specific Plan (1-14-4074-1)
LLG Engineers
Synchro 8 Report
9/24/2014

Intersection	
Intersection Delay, s/veh	61.4
Intersection LOS	F

Movement	EBU	EBL	EBT	EBR	WBU	WBL	WBT	WBR	NBU	NBL	NBT	NBR
Vol, veh/h	0	143	641	0	0	65	983	43	0	0	1	0
Peak Hour Factor	0.93	0.93	0.93	0.93	0.93	0.93	0.93	0.93	0.93	0.93	0.93	0.93
Heavy Vehicles, %	2	2	2	2	2	2	2	2	2	2	2	2
Mvmt Flow	0	154	689	0	0	70	1057	46	0	0	1	0
Number of Lanes	0	0	2	0	0	0	1	0	0	0	1	0

Approach	EB	WB	NB
Opposing Approach	WB	EB	SB
Opposing Lanes	1	2	1
Conflicting Approach Left	SB	NB	EB
Conflicting Lanes Left	1	1	2
Conflicting Approach Right	NB	SB	WB
Conflicting Lanes Right	1	1	1
HCM Control Delay	52.1	66.7	12.6
HCM LOS	F	F	B

Lane	NBLn1	EBLn1	EBLn2	WBLn1	SBLn1
Vol Left, %	0%	40%	0%	6%	8%
Vol Thru, %	100%	60%	100%	90%	11%
Vol Right, %	0%	0%	0%	4%	81%
Sign Control	Stop	Stop	Stop	Stop	Stop
Traffic Vol by Lane	1	357	427	1091	621
LT Vol	1	214	427	983	66
Through Vol	0	0	0	43	505
RT Vol	0	143	0	65	50
Lane Flow Rate	1	384	459	1173	668
Geometry Grp	2	7	7	5	2
Degree of Util (X)	0.003	0.835	0.975	1	1
Departure Headway (Hd)	9.615	7.835	7.635	7.067	6.507
Convergence, Y/N	Yes	Yes	Yes	Yes	Yes
Cap	374	464	478	528	561
Service Time	7.615	5.538	5.337	5.118	4.558
HCM Lane V/C Ratio	0.003	0.828	0.96	2.222	1.191
HCM Control Delay	12.6	39.2	62.9	66.7	63.9
HCM Lane LOS	B	E	F	F	F
HCM 95th-tile Q	0	8.2	12.4	13.8	14.3

HCM 2010 AWSC
11: Private Driveway/Aerojet Ave & Telstar Ave
2019 with Project
Weekday PM Peak Hour

Intersection	
Intersection Delay, s/veh	
Intersection LOS	

Movement	SBU	SBL	SBT	SBR
Vol, veh/h	0	50	66	505
Peak Hour Factor	0.93	0.93	0.93	0.93
Heavy Vehicles, %	2	2	2	2
Mvmt Flow	0	54	71	543
Number of Lanes	0	0	1	0

Approach	SB
Opposing Approach	NB
Opposing Lanes	1
Conflicting Approach Left	WB
Conflicting Lanes Left	1
Conflicting Approach Right	EB
Conflicting Lanes Right	2
HCM Control Delay	63.9
HCM LOS	F

Lane

Flair Spectrum Specific Plan (1-14-4074-1)
LLG Engineers
Synchro 8 Report
9/24/2014

Intersection	
Intersection Delay, s/veh	52.3
Intersection LOS	F

Movement	EBU	EBL	EBT	EBR	WBU	WBL	WBT	WBR	NBU	NBL	NBT	NBR
Vol, veh/h	0	103	774	0	0	0	840	7	0	0	0	0
Peak Hour Factor	0.79	0.79	0.79	0.79	0.79	0.79	0.79	0.79	0.79	0.79	0.79	0.79
Heavy Vehicles, %	2	2	2	2	2	2	2	2	2	2	2	2
Mvmt Flow	0	130	980	0	0	0	1063	9	0	0	0	0
Number of Lanes	0	0	2	0	0	0	1	0	0	0	1	0

Approach	EB	WB	NB
Opposing Approach	WB	EB	SB
Opposing Lanes	1	2	1
Conflicting Approach Left	SB	NB	EB
Conflicting Lanes Left	1	1	2
Conflicting Approach Right	NB	SB	WB
Conflicting Lanes Right	1	1	1
HCM Control Delay	52.8	62.2	0
HCM LOS	F	F	-

Lane	NBLn1	EBLn1	EBLn2	WBLn1	SBLn1
Vol Left, %	0%	29%	0%	0%	7%
Vol Thru, %	100%	71%	100%	99%	0%
Vol Right, %	0%	0%	0%	1%	93%
Sign Control	Stop	Stop	Stop	Stop	Stop
Traffic Vol by Lane	0	361	516	847	268
LT Vol	0	258	516	840	0
Through Vol	0	0	0	7	248
RT Vol	0	103	0	0	20
Lane Flow Rate	0	457	653	1072	339
Geometry Grp	2	7	7	5	2
Degree of Util (X)	0	0.851	1	1	0.611
Departure Headway (Hd)	8.552	6.704	6.561	6.184	6.488
Convergence, Y/N	Yes	Yes	Yes	Yes	Yes
Cap	0	539	555	590	560
Service Time	6.618	4.469	4.327	4.242	4.488
HCM Lane V/C Ratio	0	0.848	1.177	1.817	0.605
HCM Control Delay	11.6	36.9	63.9	62.2	19.1
HCM Lane LOS	N	E	F	F	C
HCM 95th-tile Q	0	9	14.3	14.7	4.1

HCM 2010 AWSC
11: Private Driveway/Aerojet Ave & Telstar Ave
2019 with Project
Saturday Mid-day Peak Hour

Intersection	
Intersection Delay, s/veh	
Intersection LOS	

Movement	SBU	SBL	SBT	SBR
Vol, veh/h	0	20	0	248
Peak Hour Factor	0.79	0.79	0.79	0.79
Heavy Vehicles, %	2	2	2	2
Mvmt Flow	0	25	0	314
Number of Lanes	0	0	1	0

Approach	SB
Opposing Approach	NB
Opposing Lanes	1
Conflicting Approach Left	WB
Conflicting Lanes Left	1
Conflicting Approach Right	EB
Conflicting Lanes Right	2
HCM Control Delay	19.1
HCM LOS	C

Lane

Flair Spectrum Specific Plan (1-14-4074-1)
LLG Engineers
Synchro 8 Report
9/24/2014

Intersection	
Intersection Delay, s/veh	34.8
Intersection LOS	D

Movement	EBU	EBL	EBT	EBR	WBU	WBL	WBT	WBR	NBU	NBL	NBT	NBR
Vol, veh/h	0	458	471	0	0	11	176	74	0	0	16	0
Peak Hour Factor	0.91	0.91	0.91	0.91	0.91	0.91	0.91	0.91	0.91	0.91	0.91	0.91
Heavy Vehicles, %	2	2	2	2	2	2	2	2	2	2	2	2
Mvmt Flow	0	503	518	0	0	12	193	81	0	0	18	0
Number of Lanes	0	0	2	0	0	0	1	0	0	0	1	0

Approach	EB	WB	NB
Opposing Approach	WB	EB	SB
Opposing Lanes	1	2	1
Conflicting Approach Left	SB	NB	EB
Conflicting Lanes Left	1	1	2
Conflicting Approach Right	NB	SB	WB
Conflicting Lanes Right	1	1	1
HCM Control Delay	46.4	13.6	10.5
HCM LOS	E	B	B

Lane	NBLn1	EBLn1	EBLn2	WBLn1	SBLn1
Vol Left, %	0%	74%	0%	4%	43%
Vol Thru, %	100%	26%	100%	67%	5%
Vol Right, %	0%	0%	0%	28%	52%
Sign Control	Stop	Stop	Stop	Stop	Stop
Traffic Vol by Lane	16	615	314	261	237
LT Vol	16	157	314	176	12
Through Vol	0	0	0	74	123
RT Vol	0	458	0	11	102
Lane Flow Rate	18	676	345	287	260
Geometry Grp	2	7	7	5	2
Degree of Util (X)	0.035	1	0.562	0.46	0.443
Departure Headway (Hd)	7.18	6.244	5.867	5.774	6.128
Convergence, Y/N	Yes	Yes	Yes	Yes	Yes
Cap	501	588	618	628	583
Service Time	5.196	3.954	3.577	3.777	4.211
HCM Lane V/C Ratio	0.036	1.15	0.558	0.457	0.446
HCM Control Delay	10.5	62	15.8	13.6	14.1
HCM Lane LOS	B	F	C	B	B
HCM 95th-tile Q	0.1	14.7	3.5	2.4	2.3

Intersection	
Intersection Delay, s/veh	
Intersection LOS	

Movement	SBU	SBL	SBT	SBR
Vol, veh/h	0	102	12	123
Peak Hour Factor	0.91	0.91	0.91	0.91
Heavy Vehicles, %	2	2	2	2
Mvmt Flow	0	112	13	135
Number of Lanes	0	0	1	0

Approach	SB
Opposing Approach	NB
Opposing Lanes	1
Conflicting Approach Left	WB
Conflicting Lanes Left	1
Conflicting Approach Right	EB
Conflicting Lanes Right	2
HCM Control Delay	14.1
HCM LOS	B

Lane

Intersection	
Intersection Delay, s/veh	53.3
Intersection LOS	F

Movement	EBU	EBL	EBT	EBR	WBU	WBL	WBT	WBR	NBU	NBL	NBT	NBR
Vol, veh/h	0	153	202	0	0	69	585	46	0	0	1	0
Peak Hour Factor	0.93	0.93	0.93	0.93	0.93	0.93	0.93	0.93	0.93	0.93	0.93	0.93
Heavy Vehicles, %	2	2	2	2	2	2	2	2	2	2	2	2
Mvmt Flow	0	165	217	0	0	74	629	49	0	0	1	0
Number of Lanes	0	0	2	0	0	0	1	0	0	0	1	0

Approach	EB	WB	NB
Opposing Approach	WB	EB	SB
Opposing Lanes	1	2	1
Conflicting Approach Left	SB	NB	EB
Conflicting Lanes Left	1	1	2
Conflicting Approach Right	NB	SB	WB
Conflicting Lanes Right	1	1	1
HCM Control Delay	17.1	64.7	11.8
HCM LOS	C	F	B

Lane	NBLn1	EBLn1	EBLn2	WBLn1	SBLn1
Vol Left, %	0%	69%	0%	10%	9%
Vol Thru, %	100%	31%	100%	84%	13%
Vol Right, %	0%	0%	0%	7%	78%
Sign Control	Stop	Stop	Stop	Stop	Stop
Traffic Vol by Lane	1	220	135	700	557
LT Vol	1	67	135	585	70
Through Vol	0	0	0	46	435
RT Vol	0	153	0	69	52
Lane Flow Rate	1	237	145	753	599
Geometry Grp	2	7	7	5	2
Degree of Util (X)	0.003	0.525	0.307	1	1
Departure Headway (Hd)	8.717	7.982	7.635	6.689	6.187
Convergence, Y/N	Yes	Yes	Yes	Yes	Yes
Cap	410	455	474	549	593
Service Time	6.772	5.684	5.337	4.717	4.187
HCM Lane V/C Ratio	0.002	0.521	0.306	1.372	1.01
HCM Control Delay	11.8	19.2	13.7	64.7	62
HCM Lane LOS	B	C	B	F	F
HCM 95th-tile Q	0	3	1.3	14.2	14.8

HCM 2010 AWSC
11: Private Driveway/Aerojet Ave & Telstar Ave
2035 Future Pre-Project
Weekday PM Peak Hour

Intersection	
Intersection Delay, s/veh	
Intersection LOS	

Movement	SBU	SBL	SBT	SBR
Vol, veh/h	0	52	70	435
Peak Hour Factor	0.93	0.93	0.93	0.93
Heavy Vehicles, %	2	2	2	2
Mvmt Flow	0	56	75	468
Number of Lanes	0	0	1	0

Approach	SB
Opposing Approach	NB
Opposing Lanes	1
Conflicting Approach Left	WB
Conflicting Lanes Left	1
Conflicting Approach Right	EB
Conflicting Lanes Right	2
HCM Control Delay	62
HCM LOS	F

Lane

Flair Spectrum Specific Plan (1-14-4074-1)
LLG Engineers
Synchro 8 Report
9/24/2014

Intersection	
Intersection Delay, s/veh	9.8
Intersection LOS	A

Movement	EBU	EBL	EBT	EBR	WBU	WBL	WBT	WBR	NBU	NBL	NBT	NBR
Vol, veh/h	0	110	120	0	0	0	192	8	0	0	0	0
Peak Hour Factor	0.79	0.79	0.79	0.79	0.79	0.79	0.79	0.79	0.79	0.79	0.79	0.79
Heavy Vehicles, %	2	2	2	2	2	2	2	2	2	2	2	2
Mvmt Flow	0	139	152	0	0	0	243	10	0	0	0	0
Number of Lanes	0	0	2	0	0	0	1	0	0	0	1	0

Approach	EB	WB	NB
Opposing Approach	WB	EB	SB
Opposing Lanes	1	2	1
Conflicting Approach Left	SB	NB	EB
Conflicting Lanes Left	1	1	2
Conflicting Approach Right	NB	SB	WB
Conflicting Lanes Right	1	1	1
HCM Control Delay	9.9	10.2	0
HCM LOS	A	B	-

Lane	NBLn1	EBLn1	EBLn2	WBLn1	SBLn1
Vol Left, %	0%	73%	0%	0%	16%
Vol Thru, %	100%	27%	100%	96%	0%
Vol Right, %	0%	0%	0%	4%	84%
Sign Control	Stop	Stop	Stop	Stop	Stop
Traffic Vol by Lane	0	150	80	200	129
LT Vol	0	40	80	192	0
Through Vol	0	0	0	8	108
RT Vol	0	110	0	0	21
Lane Flow Rate	0	190	101	253	163
Geometry Grp	2	7	7	5	2
Degree of Util (X)	0	0.291	0.145	0.334	0.215
Departure Headway (Hd)	5.457	5.508	5.139	4.746	4.731
Convergence, Y/N	Yes	Yes	Yes	Yes	Yes
Cap	0	649	695	754	756
Service Time	3.535	3.262	2.893	2.798	2.78
HCM Lane V/C Ratio	0	0.293	0.145	0.336	0.216
HCM Control Delay	8.5	10.5	8.8	10.2	9.1
HCM Lane LOS	N	B	A	B	A
HCM 95th-tile Q	0	1.2	0.5	1.5	0.8

Intersection	
Intersection Delay, s/veh	
Intersection LOS	

Movement	SBU	SBL	SBT	SBR
Vol, veh/h	0	21	0	108
Peak Hour Factor	0.79	0.79	0.79	0.79
Heavy Vehicles, %	2	2	2	2
Mvmt Flow	0	27	0	137
Number of Lanes	0	0	1	0

Approach	SB
Opposing Approach	NB
Opposing Lanes	1
Conflicting Approach Left	WB
Conflicting Lanes Left	1
Conflicting Approach Right	EB
Conflicting Lanes Right	2
HCM Control Delay	9.1
HCM LOS	A

Lane

Intersection	
Intersection Delay, s/veh	41.1
Intersection LOS	E

Movement	EBU	EBL	EBT	EBR	WBU	WBL	WBT	WBR	NBU	NBL	NBT	NBR
Vol, veh/h	0	458	642	0	0	11	346	74	0	0	16	0
Peak Hour Factor	0.91	0.91	0.91	0.91	0.91	0.91	0.91	0.91	0.91	0.91	0.91	0.91
Heavy Vehicles, %	2	2	2	2	2	2	2	2	2	2	2	2
Mvmt Flow	0	503	705	0	0	12	380	81	0	0	18	0
Number of Lanes	0	0	2	0	0	0	1	0	0	0	1	0

Approach	EB	WB	NB
Opposing Approach	WB	EB	SB
Opposing Lanes	1	2	1
Conflicting Approach Left	SB	NB	EB
Conflicting Lanes Left	1	1	2
Conflicting Approach Right	NB	SB	WB
Conflicting Lanes Right	1	1	1
HCM Control Delay	52.4	28.4	11.3
HCM LOS	F	D	B

Lane	NBLn1	EBLn1	EBLn2	WBLn1	SBLn1
Vol Left, %	0%	68%	0%	3%	38%
Vol Thru, %	100%	32%	100%	80%	5%
Vol Right, %	0%	0%	0%	17%	57%
Sign Control	Stop	Stop	Stop	Stop	Stop
Traffic Vol by Lane	16	672	428	431	265
LT Vol	16	214	428	346	12
Through Vol	0	0	0	74	151
RT Vol	0	458	0	11	102
Lane Flow Rate	18	738	470	474	291
Geometry Grp	2	7	7	5	2
Degree of Util (X)	0.039	1	0.832	0.794	0.532
Departure Headway (Hd)	7.96	6.713	6.366	6.033	6.58
Convergence, Y/N	Yes	Yes	Yes	Yes	Yes
Cap	449	546	569	602	550
Service Time	6.018	4.458	4.111	4.059	4.605
HCM Lane V/C Ratio	0.04	1.352	0.826	0.787	0.529
HCM Control Delay	11.3	64.6	33.2	28.4	16.9
HCM Lane LOS	B	F	D	D	C
HCM 95th-tile Q	0.1	14.1	8.6	7.7	3.1

HCM 2010 AWSC
11: Private Driveway/Aerojet Ave & Telstar Ave
2035 Future with Project
Weekday AM Peak Hour

Intersection	
Intersection Delay, s/veh	
Intersection LOS	

Movement	SBU	SBL	SBT	SBR
Vol, veh/h	0	102	12	151
Peak Hour Factor	0.91	0.91	0.91	0.91
Heavy Vehicles, %	2	2	2	2
Mvmt Flow	0	112	13	166
Number of Lanes	0	0	1	0

Approach	SB
Opposing Approach	NB
Opposing Lanes	1
Conflicting Approach Left	WB
Conflicting Lanes Left	1
Conflicting Approach Right	EB
Conflicting Lanes Right	2
HCM Control Delay	16.9
HCM LOS	C

Lane

Flair Spectrum Specific Plan (1-14-4074-1)
LLG Engineers
Synchro 8 Report
9/24/2014

Intersection	
Intersection Delay, s/veh	62.7
Intersection LOS	F

Movement	EBU	EBL	EBT	EBR	WBU	WBL	WBT	WBR	NBU	NBL	NBT	NBR
Vol, veh/h	0	153	652	0	0	69	1019	46	0	0	1	0
Peak Hour Factor	0.93	0.93	0.93	0.93	0.93	0.93	0.93	0.93	0.93	0.93	0.93	0.93
Heavy Vehicles, %	2	2	2	2	2	2	2	2	2	2	2	2
Mvmt Flow	0	165	701	0	0	74	1096	49	0	0	1	0
Number of Lanes	0	0	2	0	0	0	1	0	0	0	1	0

Approach	EB	WB	NB
Opposing Approach	WB	EB	SB
Opposing Lanes	1	2	1
Conflicting Approach Left	SB	NB	EB
Conflicting Lanes Left	1	1	2
Conflicting Approach Right	NB	SB	WB
Conflicting Lanes Right	1	1	1
HCM Control Delay	56	66.7	12.7
HCM LOS	F	F	B

Lane	NBLn1	EBLn1	EBLn2	WBLn1	SBLn1
Vol Left, %	0%	41%	0%	6%	8%
Vol Thru, %	100%	59%	100%	90%	11%
Vol Right, %	0%	0%	0%	4%	81%
Sign Control	Stop	Stop	Stop	Stop	Stop
Traffic Vol by Lane	1	370	435	1134	656
LT Vol	1	217	435	1019	70
Through Vol	0	0	0	46	534
RT Vol	0	153	0	69	52
Lane Flow Rate	1	398	467	1219	705
Geometry Grp	2	7	7	5	2
Degree of Util (X)	0.003	0.867	0.991	1	1
Departure Headway (Hd)	9.543	7.842	7.635	7.081	6.521
Convergence, Y/N	Yes	Yes	Yes	Yes	Yes
Cap	374	466	477	524	557
Service Time	7.623	5.544	5.337	5.121	4.561
HCM Lane V/C Ratio	0.003	0.854	0.979	2.326	1.266
HCM Control Delay	12.7	43.5	66.7	66.7	63.9
HCM Lane LOS	B	E	F	F	F
HCM 95th-tile Q	0	9	13	13.8	14.3

HCM 2010 AWSC
11: Private Driveway/Aerojet Ave & Telstar Ave
2035 Future With Project
Weekday PM Peak Hour

Intersection	
Intersection Delay, s/veh	
Intersection LOS	

Movement	SBU	SBL	SBT	SBR
Vol, veh/h	0	52	70	534
Peak Hour Factor	0.93	0.93	0.93	0.93
Heavy Vehicles, %	2	2	2	2
Mvmt Flow	0	56	75	574
Number of Lanes	0	0	1	0

Approach	SB
Opposing Approach	NB
Opposing Lanes	1
Conflicting Approach Left	WB
Conflicting Lanes Left	1
Conflicting Approach Right	EB
Conflicting Lanes Right	2
HCM Control Delay	63.9
HCM LOS	F

Lane

Flair Spectrum Specific Plan (1-14-4074-1)
LLG Engineers
Synchro 8 Report
9/25/2014

Intersection	
Intersection Delay, s/veh	53.2
Intersection LOS	F

Movement	EBU	EBL	EBT	EBR	WBU	WBL	WBT	WBR	NBU	NBL	NBT	NBR
Vol, veh/h	0	110	780	0	0	0	851	8	0	0	0	0
Peak Hour Factor	0.79	0.79	0.79	0.79	0.79	0.79	0.79	0.79	0.79	0.79	0.79	0.79
Heavy Vehicles, %	2	2	2	2	2	2	2	2	2	2	2	2
Mvmt Flow	0	139	987	0	0	0	1077	10	0	0	0	0
Number of Lanes	0	0	2	0	0	0	1	0	0	0	1	0

Approach	EB	WB	NB
Opposing Approach	WB	EB	SB
Opposing Lanes	1	2	1
Conflicting Approach Left	SB	NB	EB
Conflicting Lanes Left	1	1	2
Conflicting Approach Right	NB	SB	WB
Conflicting Lanes Right	1	1	1
HCM Control Delay	54.6	62.5	0
HCM LOS	F	F	-

Lane	NBLn1	EBLn1	EBLn2	WBLn1	SBLn1
Vol Left, %	0%	30%	0%	0%	8%
Vol Thru, %	100%	70%	100%	99%	0%
Vol Right, %	0%	0%	0%	1%	92%
Sign Control	Stop	Stop	Stop	Stop	Stop
Traffic Vol by Lane	0	370	520	859	276
LT Vol	0	260	520	851	0
Through Vol	0	0	0	8	255
RT Vol	0	110	0	0	21
Lane Flow Rate	0	468	658	1087	349
Geometry Grp	2	7	7	5	2
Degree of Util (X)	0	0.88	1	1	0.63
Departure Headway (Hd)	8.605	6.762	6.614	6.23	6.49
Convergence, Y/N	Yes	Yes	Yes	Yes	Yes
Cap	0	534	546	587	559
Service Time	6.667	4.525	4.376	4.286	4.49
HCM Lane V/C Ratio	0	0.876	1.205	1.852	0.624
HCM Control Delay	11.7	41.1	64.2	62.5	19.9
HCM Lane LOS	N	E	F	F	C
HCM 95th-tile Q	0	9.8	14.2	14.7	4.4

HCM 2010 AWSC
11: Private Driveway/Aerojet Ave & Telstar Ave
2035 Future with Project
Saturday Mid-day Peak Hour

Intersection	
Intersection Delay, s/veh	
Intersection LOS	

Movement	SBU	SBL	SBT	SBR
Vol, veh/h	0	21	0	255
Peak Hour Factor	0.79	0.79	0.79	0.79
Heavy Vehicles, %	2	2	2	2
Mvmt Flow	0	27	0	323
Number of Lanes	0	0	1	0

Approach	SB
Opposing Approach	NB
Opposing Lanes	1
Conflicting Approach Left	WB
Conflicting Lanes Left	1
Conflicting Approach Right	EB
Conflicting Lanes Right	2
HCM Control Delay	19.9
HCM LOS	C

Lane

Flair Spectrum Specific Plan (1-14-4074-1)
LLG Engineers
Synchro 8 Report
9/24/2014

LINSCOTT, LAW & GREENSPAN, ENGINEERS
600 S. Lake Avenue, Suite 500, Pasadena CA 91106
(626) 796.2322 Fax (626) 792-0941

INTERSECTION CAPACITY UTILIZATION

Aerojet Avenue @ Telstar Avenue
Peak hr: AM
Annual Growth: 0.82%

Phase I

N-S St: Aerojet Avenue
E-W St: Telstar Avenue
Project: Flair Spectrum Project/1-14-4074-1
File: ICU11

Date: 10/16/2014
Date of Count: 2014
Projection Year: 2016

	2014 EXIST. TRAFFIC			2014 EXISTING WITH PROJECT				2014 EXIST. W/PROJECT + MITIGATION				2016 FUTURE WITHOUT PROJECT				2016 FUTURE WITH PROJECT				2016 FUTURE W/PROJECT + MITIGATION			
	1	2	V/C	Added	Total	2	V/C	Added	Total	2	V/C	Added	Total	2	V/C	Added	Total	2	V/C	Added	Total	2	V/C
Movement	Volume	Capacity	Ratio	Volume	Volume	Capacity	Ratio	Volume	Volume	Capacity	Ratio	Volume	Volume	Capacity	Ratio	Volume	Volume	Capacity	Ratio	Volume	Volume	Capacity	Ratio
Nb Left	0	0	0.000 *	0	0	0	0.000 *	0	0	0	0.000 *	0	0	0	0.000 *	0	0	0	0.000 *	0	0	0	0.000
Nb Thru	14	1600	0.009	0	14	1600	0.009	0	14	1600	0.009	0	14	1600	0.009	0	14	1600	0.009	0	14	1600	0.009 *
Nb Right	0	0	-	0	0	0	-	0	0	0	-	0	0	0	-	0	0	0	-	0	0	0	-
Sb Left	64	0	0.040	0	64	0	0.040	0	64	0	0.040	32	96	0	0.060	0	96	0	0.060	0	96	0	0.060 *
Sb Thru	11	1600	0.116 *	0	11	1600	0.133 *	0	11	1600	0.133 *	0	11	1600	0.137 *	0	11	1600	0.154 *	0	11	1600	0.067
Sb Right	110	0	-	28	138	0	-	0	138	0	-	2	112	0	-	28	140	0	-	0	140	1600	0.087
Eb Left	411	1600	0.257 *	0	411	1600	0.257 *	0	411	1600	0.257 *	7	418	1600	0.261 *	0	418	1600	0.261 *	0	418	1600	0.261
Eb Thru	375	1600	0.234	154	529	1600	0.331	0	529	1600	0.331	59	434	1600	0.271	154	588	1600	0.368	0	588	1600	0.368 *
Eb Right	0	0	-	0	0	0	-	0	0	0	-	0	0	0	-	0	0	0	-	0	0	0	-
Wb Left	10	0	0.006	0	10	0	0.006	0	10	0	0.006	0	10	0	0.006	0	10	0	0.006	0	10	0	0.003 *
Wb Thru	138	1600	0.134 *	70	208	1600	0.178 *	0	208	1600	0.178 *	24	162	1600	0.150 *	70	232	1600	0.193 *	0	232	3200	0.097
Wb Right	66	0	-	0	66	0	-	0	66	0	-	1	67	0	-	0	67	0	-	0	67	0	-
Yellow Allowance:			0.100 *				0.100 *				0.100 *				0.100 *				0.100 *				0.100 *
(Existing All-Way Stop Control Intersection)																							
ICU			0.606				0.668				0.668				0.648				0.709				0.540
LOS			B				B				B				B				C				A

** Key conflicting movement as a part of ICU*
1 Counts conducted by.The Traffic Solution
2 Capacity expressed in veh/hour of green

LINSCOTT, LAW & GREENSPAN, ENGINEERS
600 S. Lake Avenue, Suite 500, Pasadena CA 91106
(626) 796.2322 Fax (626) 792-0941

INTERSECTION CAPACITY UTILIZATION

Aerojet Avenue @ Telstar Avenue
Peak hr: PM
Annual Growth: 0.82%

Phase I

N-S St: Aerojet Avenue
E-W St: Telstar Avenue
Project: Flair Spectrum Project/1-14-4074-1
File: ICU11

Date: 10/16/2014
Date of Count: 2014
Projection Year: 2016

	2014 EXIST. TRAFFIC			2014 EXISTING WITH PROJECT				2014 EXIST. W/PROJECT + MITIGATION				2016 FUTURE WITHOUT PROJECT				2016 FUTURE WITH PROJECT				2016 FUTURE W/PROJECT + MITIGATION			
	1	2	V/C	Added	Total	2	V/C	Added	Total	2	V/C	Added	Total	2	V/C	Added	Total	2	V/C	Added	Total	2	V/C
Movement	Volume	Capacity	Ratio	Volume	Volume	Capacity	Ratio	Volume	Volume	Capacity	Ratio	Volume	Volume	Capacity	Ratio	Volume	Volume	Capacity	Ratio	Volume	Volume	Capacity	Ratio
Nb Left	0	0	0.000 *	0	0	0	0.000 *	0	0	0	0.000 *	0	0	0	0.000 *	0	0	0	0.000 *	0	0	0	0.000 *
Nb Thru	1	1600	0.001	0	1	1600	0.001	0	1	1600	0.001	0	1	1600	0.001	0	1	1600	0.001	0	1	1600	0.001
Nb Right	0	0	-	0	0	0	-	0	0	0	-	0	0	0	-	0	0	0	-	0	0	0	-
Sb Left	28	0	0.018	0	28	0	0.018	0	28	0	0.018	21	49	0	0.031	0	49	0	0.031	0	49	0	0.031
Sb Thru	63	1600	0.301 *	0	63	1600	0.363 *	0	63	1600	0.363 *	1	64	1600	0.319 *	0	64	1600	0.381 *	0	64	1600	0.071
Sb Right	390	0	-	99	489	0	-	0	489	0	-	6	396	0	-	99	495	0	-	0	495	1600	0.310 *
Eb Left	137	1600	0.086 *	0	137	1600	0.086 *	0	137	1600	0.086 *	2	139	1600	0.087 *	0	139	1600	0.087 *	0	139	1600	0.087
Eb Thru	150	1600	0.094	372	522	1600	0.326	0	522	1600	0.326	37	187	1600	0.117	372	559	1600	0.350	0	559	1600	0.350
Eb Right	0	0	-	0	0	0	-	0	0	0	-	0	0	0	-	0	0	0	-	0	0	0	-
Wb Left	62	0	0.039	0	62	0	0.039	0	62	0	0.039	1	63	0	0.039	0	63	0	0.039	0	63	0	0.020
Wb Thru	498	1600	0.376 *	386	884	1600	0.617 *	0	884	1600	0.617 *	38	536	1600	0.401 *	386	922	1600	0.642 *	0	922	3200	0.321 *
Wb Right	41	0	-	0	41	0	-	0	41	0	-	1	42	0	-	0	42	0	-	0	42	0	-
Yellow Allowance:			0.100 *				0.100 *				0.100 *				0.100 *				0.100 *				0.100 *
(Existing All-Way Stop Control Intersection)																							
ICU			0.862				1.165				1.165				0.906				1.209				0.818
LOS			D				F				F				E				F				D

** Key conflicting movement as a part of ICU*
1 Counts conducted by.The Traffic Solution
2 Capacity expressed in veh/hour of green

LINSCOTT, LAW & GREENSPAN, ENGINEERS
600 S. Lake Avenue, Suite 500, Pasadena CA 91106
(626) 796.2322 Fax (626) 792-0941

INTERSECTION CAPACITY UTILIZATION

Aerojet Avenue @ Telstar Avenue
Peak hr: SAT MID-DAY
Annual Growth: 0.82%

Phase I

N-S St: Aerojet Avenue
E-W St: Telstar Avenue
Project: Flair Spectrum Project/1-14-4074-1
File: ICU11

Date: 10/16/2014
Date of Count: 2014
Projection Year: 2016

	2014 EXIST. TRAFFIC			2014 EXISTING WITH PROJECT				2014 EXIST. W/PROJECT + MITIGATION				2016 FUTURE WITHOUT PROJECT				2016 FUTURE WITH PROJECT				2016 FUTURE W/PROJECT + MITIGATION			
	1	2	V/C	Added	Total	2	V/C	Added	Total	2	V/C	Added	Total	2	V/C	Added	Total	2	V/C	Added	Total	2	V/C
Movement	Volume	Capacity	Ratio	Volume	Volume	Capacity	Ratio	Volume	Volume	Capacity	Ratio	Volume	Volume	Capacity	Ratio	Volume	Volume	Capacity	Ratio	Volume	Volume	Capacity	Ratio
Nb Left	0	0	0.000 *	0	0	0	0.000 *	0	0	0	0.000 *	0	0	0	0.000 *	0	0	0	0.000 *	0	0	0	0.000 *
Nb Thru	0	1600	0.000	0	0	1600	0.000	0	0	1600	0.000	0	0	1600	0.000	0	0	1600	0.000	0	0	1600	0.000
Nb Right	0	0	-	0	0	0	-	0	0	0	-	0	0	0	-	0	0	0	-	0	0	0	-
Sb Left	9	0	0.006	0	9	0	0.006	0	9	0	0.006	11	20	0	0.013	0	20	0	0.013	0	20	0	0.013
Sb Thru	0	1600	0.066 *	0	0	1600	0.158 *	0	0	1600	0.158 *	0	0	1600	0.074 *	0	0	1600	0.166 *	0	0	1600	0.013
Sb Right	97	0	-	147	244	0	-	0	244	0	-	2	99	0	-	147	246	0	-	0	246	1600	0.153 *
Eb Left	99	1600	0.062 *	0	99	1600	0.062 *	0	99	1600	0.062 *	2	101	1600	0.063 *	0	101	1600	0.063 *	0	101	1600	0.063
Eb Thru	91	1600	0.057	603	694	1600	0.434	0	694	1600	0.434	20	111	1600	0.070	603	714	1600	0.447	0	714	1600	0.447 *
Eb Right	0	0	-	0	0	0	-	0	0	0	-	0	0	0	-	0	0	0	-	0	0	0	-
Wb Left	0	0	0.000	0	0	0	0.000	0	0	0	0.000	0	0	0	0.000	0	0	0	0.000	0	0	0	0.000 *
Wb Thru	156	1600	0.102 *	600	756	1600	0.477 *	0	756	1600	0.477 *	21	177	1600	0.115 *	600	777	1600	0.490 *	0	777	3200	0.245
Wb Right	7	0	-	0	7	0	-	0	7	0	-	0	7	0	-	0	7	0	-	0	7	0	-
Yellow Allowance:			0.100 *				0.100 *				0.100 *				0.100 *				0.100 *				0.100 *
(Existing All-Way Stop Control Intersection)																							
ICU			0.330				0.797				0.797				0.352				0.819				0.700
LOS			A				C				C				A				D				B

** Key conflicting movement as a part of ICU*
1 Counts conducted by.The Traffic Solution
2 Capacity expressed in veh/hour of green

LINSCOTT, LAW & GREENSPAN, ENGINEERS
600 S. Lake Avenue, Suite 500, Pasadena CA 91106
(626) 796.2322 Fax (626) 792-0941

INTERSECTION CAPACITY UTILIZATION

Aerojet Avenue @ Telstar Avenue
Peak hr: AM
Annual Growth: 0.82%

Phases I & II

N-S St: Aerojet Avenue
E-W St: Telstar Avenue
Project: Flair Spectrum Project/1-14-4074-1
File: ICU11

Date: 10/16/2014
Date of Count: 2014
Projection Year: 2019

	2014 EXIST. TRAFFIC			2014 EXISTING WITH PROJECT				2014 EXIST. W/PROJECT + MITIGATION				2019 FUTURE WITHOUT PROJECT				2019 FUTURE WITH PROJECT				2019 FUTURE W/PROJECT + MITIGATION			
	1	2	V/C	Added	Total	2	V/C	Added	Total	2	V/C	Added	Total	2	V/C	Added	Total	2	V/C	Added	Total	2	V/C
Movement	Volume	Capacity	Ratio	Volume	Volume	Capacity	Ratio	Volume	Volume	Capacity	Ratio	Volume	Volume	Capacity	Ratio	Volume	Volume	Capacity	Ratio	Volume	Volume	Capacity	Ratio
Nb Left	0	0	0.000 *	0	0	0	0.000 *	0	0	0	0.000 *	0	0	0	0.000 *	0	0	0	0.000 *	0	0	0	0.000
Nb Thru	14	1600	0.009	0	14	1600	0.009	0	14	1600	0.009	1	15	1600	0.009	0	15	1600	0.009	0	15	1600	0.009 *
Nb Right	0	0	-	0	0	0	-	0	0	0	-	0	0	0	-	0	0	0	-	0	0	0	-
Sb Left	64	0	0.040	0	64	0	0.040	0	64	0	0.040	34	98	0	0.061	0	98	0	0.061	0	98	0	0.061 *
Sb Thru	11	1600	0.116 *	0	11	1600	0.133 *	0	11	1600	0.133 *	0	11	1600	0.140 *	0	11	1600	0.157 *	0	11	1600	0.068
Sb Right	110	0	-	28	138	0	-	0	138	0	-	5	115	0	-	28	143	0	-	0	143	1600	0.089
Eb Left	411	1600	0.257 *	0	411	1600	0.257 *	0	411	1600	0.257 *	17	428	1600	0.268 *	0	428	1600	0.268 *	0	428	1600	0.268 *
Eb Thru	375	1600	0.234	171	546	1600	0.341	0	546	1600	0.341	69	444	1600	0.277	171	615	1600	0.384	0	615	1600	0.384
Eb Right	0	0	-	0	0	0	-	0	0	0	-	0	0	0	-	0	0	0	-	0	0	0	-
Wb Left	10	0	0.006	0	10	0	0.006	0	10	0	0.006	0	10	0	0.007	0	10	0	0.007	0	10	0	0.003
Wb Thru	138	1600	0.134 *	170	308	1600	0.240 *	0	308	1600	0.240 *	28	166	1600	0.153 *	170	336	1600	0.259 *	0	336	3200	0.130 *
Wb Right	66	0	-	0	66	0	-	0	66	0	-	3	69	0	-	0	69	0	-	0	69	0	-
Yellow Allowance:			0.100 *				0.100 *				0.100 *				0.100 *				0.100 *				0.100 *
(Existing All-Way Stop Control Intersection)																							
ICU			0.606				0.730				0.730				0.660				0.784				0.567
LOS			B				C				C				B				C				A

** Key conflicting movement as a part of ICU*
1 Counts conducted by.The Traffic Solution
2 Capacity expressed in veh/hour of green

LINSCOTT, LAW & GREENSPAN, ENGINEERS
600 S. Lake Avenue, Suite 500, Pasadena CA 91106
(626) 796.2322 Fax (626) 792-0941

INTERSECTION CAPACITY UTILIZATION

Aerojet Avenue @ Telstar Avenue
Peak hr: PM
Annual Growth: 0.82%

Phases I & II

N-S St: Aerojet Avenue
E-W St: Telstar Avenue
Project: Flair Spectrum Project/1-14-4074-1
File: ICU11

Date: 10/16/2014
Date of Count: 2014
Projection Year: 2019

	2014 EXIST. TRAFFIC			2014 EXISTING WITH PROJECT				2014 EXIST. W/PROJECT + MITIGATION				2019 FUTURE WITHOUT PROJECT				2019 FUTURE WITH PROJECT				2019 FUTURE W/PROJECT + MITIGATION			
	1	2	V/C	Added	Total	2	V/C	Added	Total	2	V/C	Added	Total	2	V/C	Added	Total	2	V/C	Added	Total	2	V/C
Movement	Volume	Capacity	Ratio	Volume	Volume	Capacity	Ratio	Volume	Volume	Capacity	Ratio	Volume	Volume	Capacity	Ratio	Volume	Volume	Capacity	Ratio	Volume	Volume	Capacity	Ratio
Nb Left	0	0	0.000 *	0	0	0	0.000 *	0	0	0	0.000 *	0	0	0	0.000 *	0	0	0	0.000 *	0	0	0	0.000 *
Nb Thru	1	1600	0.001	0	1	1600	0.001	0	1	1600	0.001	0	1	1600	0.001	0	1	1600	0.001	0	1	1600	0.001
Nb Right	0	0	-	0	0	0	-	0	0	0	-	0	0	0	-	0	0	0	-	0	0	0	-
Sb Left	28	0	0.018	0	28	0	0.018	0	28	0	0.018	22	50	0	0.031	0	50	0	0.031	0	50	0	0.031
Sb Thru	63	1600	0.301 *	0	63	1600	0.363 *	0	63	1600	0.363 *	3	66	1600	0.326 *	0	66	1600	0.388 *	0	66	1600	0.072
Sb Right	390	0	-	99	489	0	-	0	489	0	-	16	406	0	-	99	505	0	-	0	505	1600	0.316 *
Eb Left	137	1600	0.086 *	0	137	1600	0.086 *	0	137	1600	0.086 *	6	143	1600	0.089 *	0	143	1600	0.089 *	0	143	1600	0.089
Eb Thru	150	1600	0.094	450	600	1600	0.375	0	600	1600	0.375	41	191	1600	0.120	450	641	1600	0.401	0	641	1600	0.401
Eb Right	0	0	-	0	0	0	-	0	0	0	-	0	0	0	-	0	0	0	-	0	0	0	-
Wb Left	62	0	0.039	0	62	0	0.039	0	62	0	0.039	3	65	0	0.040	0	65	0	0.040	0	65	0	0.020
Wb Thru	498	1600	0.376 *	434	932	1600	0.647 *	0	932	1600	0.647 *	51	549	1600	0.410 *	434	983	1600	0.681 *	0	983	3200	0.341 *
Wb Right	41	0	-	0	41	0	-	0	41	0	-	2	43	0	-	0	43	0	-	0	43	0	-
Yellow Allowance:			0.100 *				0.100 *				0.100 *				0.100 *				0.100 *				0.100 *
(Existing All-Way Stop Control Intersection)																							
ICU			0.862				1.195				1.195				0.926				1.259				0.846
LOS			D				F				F				E				F				D

** Key conflicting movement as a part of ICU*
1 Counts conducted by.The Traffic Solution
2 Capacity expressed in veh/hour of green

LINSCOTT, LAW & GREENSPAN, ENGINEERS
600 S. Lake Avenue, Suite 500, Pasadena CA 91106
(626) 796.2322 Fax (626) 792-0941

INTERSECTION CAPACITY UTILIZATION

Aerojet Avenue @ Telstar Avenue
Peak hr: SAT MID-DAY
Annual Growth: 0.82%

Phases I & II

N-S St: Aerojet Avenue
E-W St: Telstar Avenue
Project: Flair Spectrum Project/1-14-4074-1
File: ICU11

Date: 10/16/2014
Date of Count: 2014
Projection Year: 2019

	2014 EXIST. TRAFFIC			2014 EXISTING WITH PROJECT				2014 EXIST. W/PROJECT + MITIGATION				2019 FUTURE WITHOUT PROJECT				2019 FUTURE WITH PROJECT				2019 FUTURE W/PROJECT + MITIGATION			
	1	2	V/C	Added	Total	2	V/C	Added	Total	2	V/C	Added	Total	2	V/C	Added	Total	2	V/C	Added	Total	2	V/C
Movement	Volume	Capacity	Ratio	Volume	Volume	Capacity	Ratio	Volume	Volume	Capacity	Ratio	Volume	Volume	Capacity	Ratio	Volume	Volume	Capacity	Ratio	Volume	Volume	Capacity	Ratio
Nb Left	0	0	0.000 *	0	0	0	0.000 *	0	0	0	0.000 *	0	0	0	0.000 *	0	0	0	0.000 *	0	0	0	0.000 *
Nb Thru	0	1600	0.000	0	0	1600	0.000	0	0	1600	0.000	0	0	1600	0.000	0	0	1600	0.000	0	0	1600	0.000
Nb Right	0	0	-	0	0	0	-	0	0	0	-	0	0	0	-	0	0	0	-	0	0	0	-
Sb Left	9	0	0.006	0	9	0	0.006	0	9	0	0.006	11	20	0	0.013	0	20	0	0.013	0	20	0	0.013
Sb Thru	0	1600	0.066 *	0	0	1600	0.158 *	0	0	1600	0.158 *	0	0	1600	0.076 *	0	0	1600	0.168 *	0	0	1600	0.013
Sb Right	97	0	-	147	244	0	-	0	244	0	-	4	101	0	-	147	248	0	-	0	248	1600	0.155 *
Eb Left	99	1600	0.062 *	0	99	1600	0.062 *	0	99	1600	0.062 *	4	103	1600	0.064 *	0	103	1600	0.064 *	0	103	1600	0.064
Eb Thru	91	1600	0.057	660	751	1600	0.469	0	751	1600	0.469	23	114	1600	0.071	660	774	1600	0.484	0	774	1600	0.484 *
Eb Right	0	0	-	0	0	0	-	0	0	0	-	0	0	0	-	0	0	0	-	0	0	0	-
Wb Left	0	0	0.000	0	0	0	0.000	0	0	0	0.000	0	0	0	0.000	0	0	0	0.000	0	0	0	0.000 *
Wb Thru	156	1600	0.102 *	659	815	1600	0.514 *	0	815	1600	0.514 *	25	181	1600	0.117 *	659	840	1600	0.529 *	0	840	3200	0.265
Wb Right	7	0	-	0	7	0	-	0	7	0	-	0	7	0	-	0	7	0	-	0	7	0	-
Yellow Allowance:			0.100 *				0.100 *				0.100 *				0.100 *				0.100 *				0.100 *
(Existing All-Way Stop Control Intersection)																							
ICU			0.330				0.834				0.834				0.358				0.861				0.739
LOS			A				D				D				A				D				C

** Key conflicting movement as a part of ICU*
1 Counts conducted by.The Traffic Solution
2 Capacity expressed in veh/hour of green

LINSCOTT, LAW & GREENSPAN, ENGINEERS
600 S. Lake Avenue, Suite 500, Pasadena CA 91106
(626) 796.2322 Fax (626) 792-0941

INTERSECTION CAPACITY UTILIZATION

Aerojet Avenue @ Telstar Avenue
Peak hr: AM
Annual Growth: 0.52%

General Plan Buildout (Phases I & II)

N-S St: Aerojet Avenue
E-W St: Telstar Avenue
Project: Flair Spectrum Project/1-14-4074-1
File: ICU11

Date: 10/16/2014
Date of Count: 2014
Projection Year: 2035

	2014 EXIST. TRAFFIC			2014 EXISTING WITH PROJECT				2014 EXIST. W/PROJECT + MITIGATION				2035 FUTURE WITHOUT PROJECT				2035 FUTURE WITH PROJECT				2035 FUTURE W/PROJECT + MITIGATION			
	1	2	V/C	Added	Total	2	V/C	Added	Total	2	V/C	Added	Total	2	V/C	Added	Total	2	V/C	Added	Total	2	V/C
Movement	Volume	Capacity	Ratio	Volume	Volume	Capacity	Ratio	Volume	Volume	Capacity	Ratio	Volume	Volume	Capacity	Ratio	Volume	Volume	Capacity	Ratio	Volume	Volume	Capacity	Ratio
Nb Left	0	0	0.000 *	0	0	0	0.000 *	0	0	0	0.000 *	0	0	0	0.000 *	0	0	0	0.000 *	0	0	0	0.000
Nb Thru	14	1600	0.009	0	14	1600	0.009	0	14	1600	0.009	2	16	1600	0.010	0	16	1600	0.010	0	16	1600	0.010 *
Nb Right	0	0	-	0	0	0	-	0	0	0	-	0	0	0	-	0	0	0	-	0	0	0	-
Sb Left	64	0	0.040	0	64	0	0.040	0	64	0	0.040	38	102	0	0.064	0	102	0	0.064	0	102	0	0.064 *
Sb Thru	11	1600	0.116 *	0	11	1600	0.133 *	0	11	1600	0.133 *	1	12	1600	0.148 *	0	12	1600	0.166 *	0	12	1600	0.072
Sb Right	110	0	-	28	138	0	-	0	138	0	-	13	123	0	-	28	151	0	-	0	151	1600	0.094
Eb Left	411	1600	0.257 *	0	411	1600	0.257 *	0	411	1600	0.257 *	47	458	1600	0.286 *	0	458	1600	0.286 *	0	458	1600	0.286 *
Eb Thru	375	1600	0.234	171	546	1600	0.341	0	546	1600	0.341	96	471	1600	0.294	171	642	1600	0.401	0	642	1600	0.401
Eb Right	0	0	-	0	0	0	-	0	0	0	-	0	0	0	-	0	0	0	-	0	0	0	-
Wb Left	10	0	0.006	0	10	0	0.006	0	10	0	0.006	1	11	0	0.007	0	11	0	0.007	0	11	0	0.003
Wb Thru	138	1600	0.134 *	170	308	1600	0.240 *	0	308	1600	0.240 *	38	176	1600	0.163 *	170	346	1600	0.269 *	0	346	3200	0.135 *
Wb Right	66	0	-	0	66	0	-	0	66	0	-	8	74	0	-	0	74	0	-	0	74	0	-
Yellow Allowance:			0.100 *				0.100 *				0.100 *				0.100 *				0.100 *				0.100 *
(Existing All-Way Stop Control Intersection)																							
ICU			0.606				0.730				0.730				0.698				0.821				0.595
LOS			B				C				C				B				D				A

** Key conflicting movement as a part of ICU*
1 Counts conducted by.The Traffic Solution
2 Capacity expressed in veh/hour of green

LINSCOTT, LAW & GREENSPAN, ENGINEERS
600 S. Lake Avenue, Suite 500, Pasadena CA 91106
(626) 796.2322 Fax (626) 792-0941

INTERSECTION CAPACITY UTILIZATION

Aerojet Avenue @ Telstar Avenue
Peak hr: PM
Annual Growth: 0.52%

General Plan Buildout (Phases I & II)

N-S St: Aerojet Avenue
E-W St: Telstar Avenue
Project: Flair Spectrum Project/1-14-4074-1
File: ICU11

Date: 10/16/2014
Date of Count: 2014
Projection Year: 2035

	2014 EXIST. TRAFFIC			2014 EXISTING WITH PROJECT				2014 EXIST. W/PROJECT + MITIGATION				2035 FUTURE WITHOUT PROJECT				2035 FUTURE WITH PROJECT				2035 FUTURE W/PROJECT + MITIGATION			
	1	2	V/C	Added	Total	2	V/C	Added	Total	2	V/C	Added	Total	2	V/C	Added	Total	2	V/C	Added	Total	2	V/C
Movement	Volume	Capacity	Ratio	Volume	Volume	Capacity	Ratio	Volume	Volume	Capacity	Ratio	Volume	Volume	Capacity	Ratio	Volume	Volume	Capacity	Ratio	Volume	Volume	Capacity	Ratio
Nb Left	0	0	0.000 *	0	0	0	0.000 *	0	0	0	0.000 *	0	0	0	0.000 *	0	0	0	0.000 *	0	0	0	0.000 *
Nb Thru	1	1600	0.001	0	1	1600	0.001	0	1	1600	0.001	0	1	1600	0.001	0	1	1600	0.001	0	1	1600	0.001
Nb Right	0	0	-	0	0	0	-	0	0	0	-	0	0	0	-	0	0	0	-	0	0	0	-
Sb Left	28	0	0.018	0	28	0	0.018	0	28	0	0.018	24	52	0	0.033	0	52	0	0.033	0	52	0	0.033
Sb Thru	63	1600	0.301 *	0	63	1600	0.363 *	0	63	1600	0.363 *	7	70	1600	0.348 *	0	70	1600	0.410 *	0	70	1600	0.077
Sb Right	390	0	-	99	489	0	-	0	489	0	-	45	435	0	-	99	534	0	-	0	534	1600	0.334 *
Eb Left	137	1600	0.086 *	0	137	1600	0.086 *	0	137	1600	0.086 *	16	153	1600	0.095 *	0	153	1600	0.095 *	0	153	1600	0.095
Eb Thru	150	1600	0.094	450	600	1600	0.375	0	600	1600	0.375	52	202	1600	0.126	450	652	1600	0.408	0	652	1600	0.408
Eb Right	0	0	-	0	0	0	-	0	0	0	-	0	0	0	-	0	0	0	-	0	0	0	-
Wb Left	62	0	0.039	0	62	0	0.039	0	62	0	0.039	7	69	0	0.043	0	69	0	0.043	0	69	0	0.022
Wb Thru	498	1600	0.376 *	434	932	1600	0.647 *	0	932	1600	0.647 *	87	585	1600	0.438 *	434	1019	1600	0.709 *	0	1019	3200	0.354 *
Wb Right	41	0	-	0	41	0	-	0	41	0	-	5	46	0	-	0	46	0	-	0	46	0	-
Yellow Allowance:			0.100 *				0.100 *				0.100 *				0.100 *				0.100 *				0.100 *
(Existing All-Way Stop Control Intersection)																							
ICU			0.862				1.195				1.195				0.981				1.315				0.884
LOS			D				F				F				E				F				D

** Key conflicting movement as a part of ICU*
1 Counts conducted by.The Traffic Solution
2 Capacity expressed in veh/hour of green

LINSCOTT, LAW & GREENSPAN, ENGINEERS
600 S. Lake Avenue, Suite 500, Pasadena CA 91106
(626) 796.2322 Fax (626) 792-0941

INTERSECTION CAPACITY UTILIZATION

Aerojet Avenue @ Telstar Avenue
Peak hr: SAT MID-DAY
Annual Growth: 0.52%

General Plan Buildout (Phases I & II)

N-S St: Aerojet Avenue
E-W St: Telstar Avenue
Project: Flair Spectrum Project/1-14-4074-1
File: ICU11

Date: 10/16/2014
Date of Count: 2014
Projection Year: 2035

	2014 EXIST. TRAFFIC			2014 EXISTING WITH PROJECT				2014 EXIST. W/PROJECT + MITIGATION				2035 FUTURE WITHOUT PROJECT				2035 FUTURE WITH PROJECT				2035 FUTURE W/PROJECT + MITIGATION			
	1	2	V/C	Added	Total	2	V/C	Added	Total	2	V/C	Added	Total	2	V/C	Added	Total	2	V/C	Added	Total	2	V/C
Movement	Volume	Capacity	Ratio	Volume	Volume	Capacity	Ratio	Volume	Volume	Capacity	Ratio	Volume	Volume	Capacity	Ratio	Volume	Volume	Capacity	Ratio	Volume	Volume	Capacity	Ratio
Nb Left	0	0	0.000 *	0	0	0	0.000 *	0	0	0	0.000 *	0	0	0	0.000 *	0	0	0	0.000 *	0	0	0	0.000 *
Nb Thru	0	1600	0.000	0	0	1600	0.000	0	0	1600	0.000	0	0	1600	0.000	0	0	1600	0.000	0	0	1600	0.000
Nb Right	0	0	-	0	0	0	-	0	0	0	-	0	0	0	-	0	0	0	-	0	0	0	-
Sb Left	9	0	0.006	0	9	0	0.006	0	9	0	0.006	12	21	0	0.013	0	21	0	0.013	0	21	0	0.013
Sb Thru	0	1600	0.066 *	0	0	1600	0.158 *	0	0	1600	0.158 *	0	0	1600	0.081 *	0	0	1600	0.173 *	0	0	1600	0.013
Sb Right	97	0	-	147	244	0	-	0	244	0	-	11	108	0	-	147	255	0	-	0	255	1600	0.159 *
Eb Left	99	1600	0.062 *	0	99	1600	0.062 *	0	99	1600	0.062 *	11	110	1600	0.069 *	0	110	1600	0.069 *	0	110	1600	0.069
Eb Thru	91	1600	0.057	660	751	1600	0.469	0	751	1600	0.469	29	120	1600	0.075	660	780	1600	0.488	0	780	1600	0.488 *
Eb Right	0	0	-	0	0	0	-	0	0	0	-	0	0	0	-	0	0	0	-	0	0	0	-
Wb Left	0	0	0.000	0	0	0	0.000	0	0	0	0.000	0	0	0	0.000	0	0	0	0.000	0	0	0	0.000 *
Wb Thru	156	1600	0.102 *	659	815	1600	0.514 *	0	815	1600	0.514 *	36	192	1600	0.125 *	659	851	1600	0.537 *	0	851	3200	0.268
Wb Right	7	0	-	0	7	0	-	0	7	0	-	1	8	0	-	0	8	0	-	0	8	0	-
Yellow Allowance:			0.100 *				0.100 *				0.100 *				0.100 *				0.100 *				0.100 *
(Existing All-Way Stop Control Intersection)																							
ICU			0.330				0.834				0.834				0.375				0.878				0.747
LOS			A				D				D				A				D				C

** Key conflicting movement as a part of ICU*
1 Counts conducted by.The Traffic Solution
2 Capacity expressed in veh/hour of green

Intersection	
Int Delay, s/veh	1.2

Movement	EBT	EBR	WBL	WBT	NBL	NBR
Vol, veh/h	213	88	40	250	12	25
Conflicting Peds, #/hr	0	0	0	0	0	0
Sign Control	Free	Free	Free	Free	Stop	Stop
RT Channelized	-	None	-	None	-	None
Storage Length	-	-	-	-	0	-
Veh in Median Storage, #	0	-	-	0	0	-
Grade, %	0	-	-	0	0	-
Peak Hour Factor	94	94	94	94	94	94
Heavy Vehicles, %	2	2	2	2	2	2
Mvmt Flow	227	94	43	266	13	27

Major/Minor	Major1		Major2		Minor1	
Conflicting Flow All	0	0	320	0	624	273
Stage 1	-	-	-	-	273	-
Stage 2	-	-	-	-	351	-
Critical Hdwy	-	-	4.12	-	6.42	6.22
Critical Hdwy Stg 1	-	-	-	-	5.42	-
Critical Hdwy Stg 2	-	-	-	-	5.42	-
Follow-up Hdwy	-	-	2.218	-	3.518	3.318
Pot Cap-1 Maneuver	-	-	1240	-	449	766
Stage 1	-	-	-	-	773	-
Stage 2	-	-	-	-	713	-
Platoon blocked, %	-	-		-		
Mov Cap-1 Maneuver	-	-	1240	-	431	766
Mov Cap-2 Maneuver	-	-	-	-	431	-
Stage 1	-	-	-	-	773	-
Stage 2	-	-	-	-	684	-

Approach	EB	WB	NB
HCM Control Delay, s	0	1.1	11.3
HCM LOS			B

Minor Lane/Major Mvmt	NBLn1	EBT	EBR	WBL	WBT
Capacity (veh/h)	612	-	-	1240	-
HCM Lane V/C Ratio	0.064	-	-	0.034	-
HCM Control Delay (s)	11.3	-	-	8	0
HCM Lane LOS	B	-	-	A	A
HCM 95th %tile Q(veh)	0.2	-	-	0.1	-

Intersection	
Int Delay, s/veh	2.3

Movement	EBT	EBR	WBL	WBT	NBL	NBR
Vol, veh/h	159	31	19	106	29	41
Conflicting Peds, #/hr	0	0	0	0	0	0
Sign Control	Free	Free	Free	Free	Stop	Stop
RT Channelized	-	None	-	None	-	None
Storage Length	-	-	-	-	0	-
Veh in Median Storage, #	0	-	-	0	0	-
Grade, %	0	-	-	0	0	-
Peak Hour Factor	84	84	84	84	84	84
Heavy Vehicles, %	2	2	2	2	2	2
Mvmt Flow	189	37	23	126	35	49

Major/Minor	Major1		Major2		Minor1	
Conflicting Flow All	0	0	226	0	379	208
Stage 1	-	-	-	-	208	-
Stage 2	-	-	-	-	171	-
Critical Hdwy	-	-	4.12	-	6.42	6.22
Critical Hdwy Stg 1	-	-	-	-	5.42	-
Critical Hdwy Stg 2	-	-	-	-	5.42	-
Follow-up Hdwy	-	-	2.218	-	3.518	3.318
Pot Cap-1 Maneuver	-	-	1342	-	623	832
Stage 1	-	-	-	-	827	-
Stage 2	-	-	-	-	859	-
Platoon blocked, %	-	-		-		
Mov Cap-1 Maneuver	-	-	1342	-	612	832
Mov Cap-2 Maneuver	-	-	-	-	612	-
Stage 1	-	-	-	-	827	-
Stage 2	-	-	-	-	844	-

Approach	EB	WB	NB
HCM Control Delay, s	0	1.2	10.6
HCM LOS			B

Minor Lane/Major Mvmt	NBLn1	EBT	EBR	WBL	WBT
Capacity (veh/h)	724	-	-	1342	-
HCM Lane V/C Ratio	0.115	-	-	0.017	-
HCM Control Delay (s)	10.6	-	-	7.7	0
HCM Lane LOS	B	-	-	A	A
HCM 95th %tile Q(veh)	0.4	-	-	0.1	-

Intersection	
Int Delay, s/veh	0.8

Movement	EBT	EBR	WBL	WBT	NBL	NBR
Vol, veh/h	21	4	4	36	1	2
Conflicting Peds, #/hr	0	0	0	0	0	0
Sign Control	Free	Free	Free	Free	Stop	Stop
RT Channelized	-	None	-	None	-	None
Storage Length	-	-	-	-	0	-
Veh in Median Storage, #	0	-	-	0	0	-
Grade, %	0	-	-	0	0	-
Peak Hour Factor	94	94	94	94	94	94
Heavy Vehicles, %	2	2	2	2	2	2
Mvmt Flow	22	4	4	38	1	2

Major/Minor	Major1		Major2		Minor1	
Conflicting Flow All	0	0	27	0	71	24
Stage 1	-	-	-	-	24	-
Stage 2	-	-	-	-	47	-
Critical Hdwy	-	-	4.12	-	6.42	6.22
Critical Hdwy Stg 1	-	-	-	-	5.42	-
Critical Hdwy Stg 2	-	-	-	-	5.42	-
Follow-up Hdwy	-	-	2.218	-	3.518	3.318
Pot Cap-1 Maneuver	-	-	1587	-	933	1052
Stage 1	-	-	-	-	999	-
Stage 2	-	-	-	-	975	-
Platoon blocked, %	-	-		-		
Mov Cap-1 Maneuver	-	-	1587	-	930	1052
Mov Cap-2 Maneuver	-	-	-	-	930	-
Stage 1	-	-	-	-	999	-
Stage 2	-	-	-	-	972	-

Approach	EB	WB	NB
HCM Control Delay, s	0	0.7	8.6
HCM LOS			A

Minor Lane/Major Mvmt	NBLn1	EBT	EBR	WBL	WBT
Capacity (veh/h)	1008	-	-	1587	-
HCM Lane V/C Ratio	0.003	-	-	0.003	-
HCM Control Delay (s)	8.6	-	-	7.3	0
HCM Lane LOS	A	-	-	A	A
HCM 95th %tile Q(veh)	0	-	-	0	-

Intersection	
Int Delay, s/veh	2.6

Movement	EBT	EBR	WBL	WBT	NBL	NBR
Vol, veh/h	294	110	97	298	31	86
Conflicting Peds, #/hr	0	0	0	0	0	0
Sign Control	Free	Free	Free	Free	Stop	Stop
RT Channelized	-	None	-	None	-	None
Storage Length	-	-	250	-	0	0
Veh in Median Storage, #	0	-	-	0	0	-
Grade, %	0	-	-	0	0	-
Peak Hour Factor	94	94	94	94	94	94
Heavy Vehicles, %	2	2	2	2	2	2
Mvmt Flow	313	117	103	317	33	91

Major/Minor	Major1		Major2		Minor1	
Conflicting Flow All	0	0	430	0	894	371
Stage 1	-	-	-	-	371	-
Stage 2	-	-	-	-	523	-
Critical Hdwy	-	-	4.12	-	6.42	6.22
Critical Hdwy Stg 1	-	-	-	-	5.42	-
Critical Hdwy Stg 2	-	-	-	-	5.42	-
Follow-up Hdwy	-	-	2.218	-	3.518	3.318
Pot Cap-1 Maneuver	-	-	1129	-	312	675
Stage 1	-	-	-	-	698	-
Stage 2	-	-	-	-	595	-
Platoon blocked, %	-	-		-		
Mov Cap-1 Maneuver	-	-	1129	-	284	675
Mov Cap-2 Maneuver	-	-	-	-	284	-
Stage 1	-	-	-	-	698	-
Stage 2	-	-	-	-	541	-

Approach	EB	WB	NB
HCM Control Delay, s	0	2.1	13.3
HCM LOS			B

Minor Lane/Major Mvmt	NBLn1	NBLn2	EBT	EBR	WBL	WBT
Capacity (veh/h)	284	675	-	-	1129	-
HCM Lane V/C Ratio	0.116	0.136	-	-	0.091	-
HCM Control Delay (s)	19.3	11.2	-	-	8.5	-
HCM Lane LOS	C	B	-	-	A	-
HCM 95th %tile Q(veh)	0.4	0.5	-	-	0.3	-

Intersection	
Int Delay, s/veh	5

Movement	EBT	EBR	WBL	WBT	NBL	NBR
Vol, veh/h	340	107	170	291	38	187
Conflicting Peds, #/hr	0	0	0	0	0	0
Sign Control	Free	Free	Free	Free	Stop	Stop
RT Channelized	-	None	-	None	-	None
Storage Length	-	-	250	-	0	0
Veh in Median Storage, #	0	-	-	0	0	-
Grade, %	0	-	-	0	0	-
Peak Hour Factor	84	84	84	84	84	84
Heavy Vehicles, %	2	2	2	2	2	2
Mvmt Flow	405	127	202	346	45	223

Major/Minor	Major1		Major2		Minor1	
Conflicting Flow All	0	0	532	0	1219	468
Stage 1	-	-	-	-	468	-
Stage 2	-	-	-	-	751	-
Critical Hdwy	-	-	4.12	-	6.42	6.22
Critical Hdwy Stg 1	-	-	-	-	5.42	-
Critical Hdwy Stg 2	-	-	-	-	5.42	-
Follow-up Hdwy	-	-	2.218	-	3.518	3.318
Pot Cap-1 Maneuver	-	-	1036	-	199	595
Stage 1	-	-	-	-	630	-
Stage 2	-	-	-	-	466	-
Platoon blocked, %	-	-		-		
Mov Cap-1 Maneuver	-	-	1036	-	160	595
Mov Cap-2 Maneuver	-	-	-	-	160	-
Stage 1	-	-	-	-	630	-
Stage 2	-	-	-	-	375	-

Approach	EB	WB	NB
HCM Control Delay, s	0	3.4	18.2
HCM LOS			C

Minor Lane/Major Mvmt	NBLn1	NBLn2	EBT	EBR	WBL	WBT
Capacity (veh/h)	160	595	-	-	1036	-
HCM Lane V/C Ratio	0.283	0.374	-	-	0.195	-
HCM Control Delay (s)	36.1	14.6	-	-	9.3	-
HCM Lane LOS	E	B	-	-	A	-
HCM 95th %tile Q(veh)	1.1	1.7	-	-	0.7	-

Intersection	
Int Delay, s/veh	4.5

Movement	EBT	EBR	WBL	WBT	NBL	NBR
Vol, veh/h	311	96	231	315	12	220
Conflicting Peds, #/hr	0	0	0	0	0	0
Sign Control	Free	Free	Free	Free	Stop	Stop
RT Channelized	-	None	-	None	-	None
Storage Length	-	-	250	-	0	0
Veh in Median Storage, #	0	-	-	0	0	-
Grade, %	0	-	-	0	0	-
Peak Hour Factor	94	94	94	94	94	94
Heavy Vehicles, %	2	2	2	2	2	2
Mvmt Flow	331	102	246	335	13	234

Major/Minor	Major1		Major2		Minor1	
Conflicting Flow All	0	0	433	0	1209	382
Stage 1	-	-	-	-	382	-
Stage 2	-	-	-	-	827	-
Critical Hdwy	-	-	4.12	-	6.42	6.22
Critical Hdwy Stg 1	-	-	-	-	5.42	-
Critical Hdwy Stg 2	-	-	-	-	5.42	-
Follow-up Hdwy	-	-	2.218	-	3.518	3.318
Pot Cap-1 Maneuver	-	-	1127	-	202	665
Stage 1	-	-	-	-	690	-
Stage 2	-	-	-	-	430	-
Platoon blocked, %	-	-		-		
Mov Cap-1 Maneuver	-	-	1127	-	158	665
Mov Cap-2 Maneuver	-	-	-	-	158	-
Stage 1	-	-	-	-	690	-
Stage 2	-	-	-	-	336	-

Approach	EB	WB	NB
HCM Control Delay, s	0	3.8	14.2
HCM LOS			B

Minor Lane/Major Mvmt	NBLn1	NBLn2	EBT	EBR	WBL	WBT
Capacity (veh/h)	158	665	-	-	1127	-
HCM Lane V/C Ratio	0.081	0.352	-	-	0.218	-
HCM Control Delay (s)	29.8	13.3	-	-	9.1	-
HCM Lane LOS	D	B	-	-	A	-
HCM 95th %tile Q(veh)	0.3	1.6	-	-	0.8	-

Intersection	
Int Delay, s/veh	1.2

Movement	EBT	EBR	WBL	WBT	NBL	NBR
Vol, veh/h	217	89	41	254	12	25
Conflicting Peds, #/hr	0	0	0	0	0	0
Sign Control	Free	Free	Free	Free	Stop	Stop
RT Channelized	-	None	-	None	-	None
Storage Length	-	-	-	-	0	-
Veh in Median Storage, #	0	-	-	0	0	-
Grade, %	0	-	-	0	0	-
Peak Hour Factor	94	94	94	94	94	94
Heavy Vehicles, %	2	2	2	2	2	2
Mvmt Flow	231	95	44	270	13	27

Major/Minor	Major1		Major2		Minor1	
Conflicting Flow All	0	0	326	0	635	278
Stage 1	-	-	-	-	278	-
Stage 2	-	-	-	-	357	-
Critical Hdwy	-	-	4.12	-	6.42	6.22
Critical Hdwy Stg 1	-	-	-	-	5.42	-
Critical Hdwy Stg 2	-	-	-	-	5.42	-
Follow-up Hdwy	-	-	2.218	-	3.518	3.318
Pot Cap-1 Maneuver	-	-	1234	-	443	761
Stage 1	-	-	-	-	769	-
Stage 2	-	-	-	-	708	-
Platoon blocked, %	-	-		-		
Mov Cap-1 Maneuver	-	-	1234	-	424	761
Mov Cap-2 Maneuver	-	-	-	-	424	-
Stage 1	-	-	-	-	769	-
Stage 2	-	-	-	-	678	-

Approach	EB	WB	NB
HCM Control Delay, s	0	1.1	11.4
HCM LOS			B

Minor Lane/Major Mvmt	NBLn1	EBT	EBR	WBL	WBT
Capacity (veh/h)	605	-	-	1234	-
HCM Lane V/C Ratio	0.065	-	-	0.035	-
HCM Control Delay (s)	11.4	-	-	8	0
HCM Lane LOS	B	-	-	A	A
HCM 95th %tile Q(veh)	0.2	-	-	0.1	-

Intersection	
Int Delay, s/veh	2.3

Movement	EBT	EBR	WBL	WBT	NBL	NBR
Vol, veh/h	162	32	19	108	29	42
Conflicting Peds, #/hr	0	0	0	0	0	0
Sign Control	Free	Free	Free	Free	Stop	Stop
RT Channelized	-	None	-	None	-	None
Storage Length	-	-	-	-	0	-
Veh in Median Storage, #	0	-	-	0	0	-
Grade, %	0	-	-	0	0	-
Peak Hour Factor	84	84	84	84	84	84
Heavy Vehicles, %	2	2	2	2	2	2
Mvmt Flow	193	38	23	129	35	50

Major/Minor	Major1		Major2		Minor1	
Conflicting Flow All	0	0	231	0	386	212
Stage 1	-	-	-	-	212	-
Stage 2	-	-	-	-	174	-
Critical Hdwy	-	-	4.12	-	6.42	6.22
Critical Hdwy Stg 1	-	-	-	-	5.42	-
Critical Hdwy Stg 2	-	-	-	-	5.42	-
Follow-up Hdwy	-	-	2.218	-	3.518	3.318
Pot Cap-1 Maneuver	-	-	1337	-	617	828
Stage 1	-	-	-	-	823	-
Stage 2	-	-	-	-	856	-
Platoon blocked, %	-	-		-		
Mov Cap-1 Maneuver	-	-	1337	-	605	828
Mov Cap-2 Maneuver	-	-	-	-	605	-
Stage 1	-	-	-	-	823	-
Stage 2	-	-	-	-	840	-

Approach	EB	WB	NB
HCM Control Delay, s	0	1.2	10.7
HCM LOS			B

Minor Lane/Major Mvmt	NBLn1	EBT	EBR	WBL	WBT
Capacity (veh/h)	720	-	-	1337	-
HCM Lane V/C Ratio	0.117	-	-	0.017	-
HCM Control Delay (s)	10.7	-	-	7.7	0
HCM Lane LOS	B	-	-	A	A
HCM 95th %tile Q(veh)	0.4	-	-	0.1	-

Intersection	
Int Delay, s/veh	0.8

Movement	EBT	EBR	WBL	WBT	NBL	NBR
Vol, veh/h	21	4	4	37	1	2
Conflicting Peds, #/hr	0	0	0	0	0	0
Sign Control	Free	Free	Free	Free	Stop	Stop
RT Channelized	-	None	-	None	-	None
Storage Length	-	-	-	-	0	-
Veh in Median Storage, #	0	-	-	0	0	-
Grade, %	0	-	-	0	0	-
Peak Hour Factor	94	94	94	94	94	94
Heavy Vehicles, %	2	2	2	2	2	2
Mvmt Flow	22	4	4	39	1	2

Major/Minor	Major1		Major2		Minor1	
Conflicting Flow All	0	0	27	0	72	24
Stage 1	-	-	-	-	24	-
Stage 2	-	-	-	-	48	-
Critical Hdwy	-	-	4.12	-	6.42	6.22
Critical Hdwy Stg 1	-	-	-	-	5.42	-
Critical Hdwy Stg 2	-	-	-	-	5.42	-
Follow-up Hdwy	-	-	2.218	-	3.518	3.318
Pot Cap-1 Maneuver	-	-	1587	-	932	1052
Stage 1	-	-	-	-	999	-
Stage 2	-	-	-	-	974	-
Platoon blocked, %	-	-		-		
Mov Cap-1 Maneuver	-	-	1587	-	929	1052
Mov Cap-2 Maneuver	-	-	-	-	929	-
Stage 1	-	-	-	-	999	-
Stage 2	-	-	-	-	971	-

Approach	EB	WB	NB
HCM Control Delay, s	0	0.7	8.6
HCM LOS			A

Minor Lane/Major Mvmt	NBLn1	EBT	EBR	WBL	WBT
Capacity (veh/h)	1008	-	-	1587	-
HCM Lane V/C Ratio	0.003	-	-	0.003	-
HCM Control Delay (s)	8.6	-	-	7.3	0
HCM Lane LOS	A	-	-	A	A
HCM 95th %tile Q(veh)	0	-	-	0	-

Intersection	
Int Delay, s/veh	2

Movement	EBT	EBR	WBL	WBT	NBL	NBR
Vol, veh/h	298	103	94	302	12	67
Conflicting Peds, #/hr	0	0	0	0	0	0
Sign Control	Free	Free	Free	Free	Stop	Stop
RT Channelized	-	None	-	None	-	None
Storage Length	-	-	250	-	0	0
Veh in Median Storage, #	0	-	-	0	0	-
Grade, %	0	-	-	0	0	-
Peak Hour Factor	94	94	94	94	94	94
Heavy Vehicles, %	2	2	2	2	2	2
Mvmt Flow	317	110	100	321	13	71

Major/Minor	Major1		Major2		Minor1	
Conflicting Flow All	0	0	427	0	893	372
Stage 1	-	-	-	-	372	-
Stage 2	-	-	-	-	521	-
Critical Hdwy	-	-	4.12	-	6.42	6.22
Critical Hdwy Stg 1	-	-	-	-	5.42	-
Critical Hdwy Stg 2	-	-	-	-	5.42	-
Follow-up Hdwy	-	-	2.218	-	3.518	3.318
Pot Cap-1 Maneuver	-	-	1132	-	312	674
Stage 1	-	-	-	-	697	-
Stage 2	-	-	-	-	596	-
Platoon blocked, %	-	-		-		
Mov Cap-1 Maneuver	-	-	1132	-	284	674
Mov Cap-2 Maneuver	-	-	-	-	284	-
Stage 1	-	-	-	-	697	-
Stage 2	-	-	-	-	543	-

Approach	EB	WB	NB
HCM Control Delay, s	0	2	12.1
HCM LOS			B

Minor Lane/Major Mvmt	NBLn1	NBLn2	EBT	EBR	WBL	WBT
Capacity (veh/h)	284	674	-	-	1132	-
HCM Lane V/C Ratio	0.045	0.106	-	-	0.088	-
HCM Control Delay (s)	18.3	11	-	-	8.5	-
HCM Lane LOS	C	B	-	-	A	-
HCM 95th %tile Q(veh)	0.1	0.4	-	-	0.3	-

Intersection	
Int Delay, s/veh	4.5

Movement	EBT	EBR	WBL	WBT	NBL	NBR
Vol, veh/h	343	72	152	293	29	179
Conflicting Peds, #/hr	0	0	0	0	0	0
Sign Control	Free	Free	Free	Free	Stop	Stop
RT Channelized	-	None	-	None	-	None
Storage Length	-	-	250	-	0	0
Veh in Median Storage, #	0	-	-	0	0	-
Grade, %	0	-	-	0	0	-
Peak Hour Factor	84	84	84	84	84	84
Heavy Vehicles, %	2	2	2	2	2	2
Mvmt Flow	408	86	181	349	35	213

Major/Minor	Major1		Major2		Minor1	
Conflicting Flow All	0	0	494	0	1162	451
Stage 1	-	-	-	-	451	-
Stage 2	-	-	-	-	711	-
Critical Hdwy	-	-	4.12	-	6.42	6.22
Critical Hdwy Stg 1	-	-	-	-	5.42	-
Critical Hdwy Stg 2	-	-	-	-	5.42	-
Follow-up Hdwy	-	-	2.218	-	3.518	3.318
Pot Cap-1 Maneuver	-	-	1070	-	216	608
Stage 1	-	-	-	-	642	-
Stage 2	-	-	-	-	487	-
Platoon blocked, %	-	-		-		
Mov Cap-1 Maneuver	-	-	1070	-	179	608
Mov Cap-2 Maneuver	-	-	-	-	179	-
Stage 1	-	-	-	-	642	-
Stage 2	-	-	-	-	405	-

Approach	EB	WB	NB
HCM Control Delay, s	0	3.1	16.3
HCM LOS			C

Minor Lane/Major Mvmt	NBLn1	NBLn2	EBT	EBR	WBL	WBT
Capacity (veh/h)	179	608	-	-	1070	-
HCM Lane V/C Ratio	0.193	0.35	-	-	0.169	-
HCM Control Delay (s)	29.9	14.1	-	-	9	-
HCM Lane LOS	D	B	-	-	A	-
HCM 95th %tile Q(veh)	0.7	1.6	-	-	0.6	-

Intersection	
Int Delay, s/veh	4.1

Movement	EBT	EBR	WBL	WBT	NBL	NBR
Vol, veh/h	311	70	218	316	1	209
Conflicting Peds, #/hr	0	0	0	0	0	0
Sign Control	Free	Free	Free	Free	Stop	Stop
RT Channelized	-	None	-	None	-	None
Storage Length	-	-	250	-	0	0
Veh in Median Storage, #	0	-	-	0	0	-
Grade, %	0	-	-	0	0	-
Peak Hour Factor	94	94	94	94	94	94
Heavy Vehicles, %	2	2	2	2	2	2
Mvmt Flow	331	74	232	336	1	222

Major/Minor	Major1		Major2		Minor1	
Conflicting Flow All	0	0	405	0	1168	368
Stage 1	-	-	-	-	368	-
Stage 2	-	-	-	-	800	-
Critical Hdwy	-	-	4.12	-	6.42	6.22
Critical Hdwy Stg 1	-	-	-	-	5.42	-
Critical Hdwy Stg 2	-	-	-	-	5.42	-
Follow-up Hdwy	-	-	2.218	-	3.518	3.318
Pot Cap-1 Maneuver	-	-	1154	-	214	677
Stage 1	-	-	-	-	700	-
Stage 2	-	-	-	-	442	-
Platoon blocked, %	-	-		-		
Mov Cap-1 Maneuver	-	-	1154	-	171	677
Mov Cap-2 Maneuver	-	-	-	-	171	-
Stage 1	-	-	-	-	700	-
Stage 2	-	-	-	-	353	-

Approach	EB	WB	NB
HCM Control Delay, s	0	3.6	13
HCM LOS			B

Minor Lane/Major Mvmt	NBLn1	NBLn2	EBT	EBR	WBL	WBT
Capacity (veh/h)	171	677	-	-	1154	-
HCM Lane V/C Ratio	0.006	0.328	-	-	0.201	-
HCM Control Delay (s)	26.2	12.9	-	-	8.9	-
HCM Lane LOS	D	B	-	-	A	-
HCM 95th %tile Q(veh)	0	1.4	-	-	0.8	-

Intersection	
Int Delay, s/veh	1.2

Movement	EBT	EBR	WBL	WBT	NBL	NBR
Vol, veh/h	222	92	42	260	13	26
Conflicting Peds, #/hr	0	0	0	0	0	0
Sign Control	Free	Free	Free	Free	Stop	Stop
RT Channelized	-	None	-	None	-	None
Storage Length	-	-	-	-	0	-
Veh in Median Storage, #	0	-	-	0	0	-
Grade, %	0	-	-	0	0	-
Peak Hour Factor	94	94	94	94	94	94
Heavy Vehicles, %	2	2	2	2	2	2
Mvmt Flow	236	98	45	277	14	28

Major/Minor	Major1		Major2		Minor1	
Conflicting Flow All	0	0	334	0	651	285
Stage 1	-	-	-	-	285	-
Stage 2	-	-	-	-	366	-
Critical Hdwy	-	-	4.12	-	6.42	6.22
Critical Hdwy Stg 1	-	-	-	-	5.42	-
Critical Hdwy Stg 2	-	-	-	-	5.42	-
Follow-up Hdwy	-	-	2.218	-	3.518	3.318
Pot Cap-1 Maneuver	-	-	1225	-	433	754
Stage 1	-	-	-	-	763	-
Stage 2	-	-	-	-	702	-
Platoon blocked, %	-	-		-		
Mov Cap-1 Maneuver	-	-	1225	-	414	754
Mov Cap-2 Maneuver	-	-	-	-	414	-
Stage 1	-	-	-	-	763	-
Stage 2	-	-	-	-	672	-

Approach	EB	WB	NB
HCM Control Delay, s	0	1.1	11.5
HCM LOS			B

Minor Lane/Major Mvmt	NBLn1	EBT	EBR	WBL	WBT
Capacity (veh/h)	592	-	-	1225	-
HCM Lane V/C Ratio	0.07	-	-	0.036	-
HCM Control Delay (s)	11.5	-	-	8.1	0
HCM Lane LOS	B	-	-	A	A
HCM 95th %tile Q(veh)	0.2	-	-	0.1	-

Intersection	
Int Delay, s/veh	2.4

Movement	EBT	EBR	WBL	WBT	NBL	NBR
Vol, veh/h	166	32	20	110	30	43
Conflicting Peds, #/hr	0	0	0	0	0	0
Sign Control	Free	Free	Free	Free	Stop	Stop
RT Channelized	-	None	-	None	-	None
Storage Length	-	-	-	-	0	-
Veh in Median Storage, #	0	-	-	0	0	-
Grade, %	0	-	-	0	0	-
Peak Hour Factor	84	84	84	84	84	84
Heavy Vehicles, %	2	2	2	2	2	2
Mvmt Flow	198	38	24	131	36	51

Major/Minor	Major1		Major2		Minor1	
Conflicting Flow All	0	0	236	0	396	217
Stage 1	-	-	-	-	217	-
Stage 2	-	-	-	-	179	-
Critical Hdwy	-	-	4.12	-	6.42	6.22
Critical Hdwy Stg 1	-	-	-	-	5.42	-
Critical Hdwy Stg 2	-	-	-	-	5.42	-
Follow-up Hdwy	-	-	2.218	-	3.518	3.318
Pot Cap-1 Maneuver	-	-	1331	-	609	823
Stage 1	-	-	-	-	819	-
Stage 2	-	-	-	-	852	-
Platoon blocked, %	-	-		-		
Mov Cap-1 Maneuver	-	-	1331	-	597	823
Mov Cap-2 Maneuver	-	-	-	-	597	-
Stage 1	-	-	-	-	819	-
Stage 2	-	-	-	-	836	-

Approach	EB	WB	NB
HCM Control Delay, s	0	1.2	10.8
HCM LOS			B

Minor Lane/Major Mvmt	NBLn1	EBT	EBR	WBL	WBT
Capacity (veh/h)	712	-	-	1331	-
HCM Lane V/C Ratio	0.122	-	-	0.018	-
HCM Control Delay (s)	10.8	-	-	7.8	0
HCM Lane LOS	B	-	-	A	A
HCM 95th %tile Q(veh)	0.4	-	-	0.1	-

Intersection	
Int Delay, s/veh	0.8

Movement	EBT	EBR	WBL	WBT	NBL	NBR
Vol, veh/h	22	4	4	38	1	2
Conflicting Peds, #/hr	0	0	0	0	0	0
Sign Control	Free	Free	Free	Free	Stop	Stop
RT Channelized	-	None	-	None	-	None
Storage Length	-	-	-	-	0	-
Veh in Median Storage, #	0	-	-	0	0	-
Grade, %	0	-	-	0	0	-
Peak Hour Factor	94	94	94	94	94	94
Heavy Vehicles, %	2	2	2	2	2	2
Mvmt Flow	23	4	4	40	1	2

Major/Minor	Major1		Major2		Minor1	
Conflicting Flow All	0	0	28	0	75	26
Stage 1	-	-	-	-	26	-
Stage 2	-	-	-	-	49	-
Critical Hdwy	-	-	4.12	-	6.42	6.22
Critical Hdwy Stg 1	-	-	-	-	5.42	-
Critical Hdwy Stg 2	-	-	-	-	5.42	-
Follow-up Hdwy	-	-	2.218	-	3.518	3.318
Pot Cap-1 Maneuver	-	-	1585	-	928	1050
Stage 1	-	-	-	-	997	-
Stage 2	-	-	-	-	973	-
Platoon blocked, %	-	-		-		
Mov Cap-1 Maneuver	-	-	1585	-	925	1050
Mov Cap-2 Maneuver	-	-	-	-	925	-
Stage 1	-	-	-	-	997	-
Stage 2	-	-	-	-	970	-

Approach	EB	WB	NB
HCM Control Delay, s	0	0.7	8.6
HCM LOS			A

Minor Lane/Major Mvmt	NBLn1	EBT	EBR	WBL	WBT
Capacity (veh/h)	1005	-	-	1585	-
HCM Lane V/C Ratio	0.003	-	-	0.003	-
HCM Control Delay (s)	8.6	-	-	7.3	0
HCM Lane LOS	A	-	-	A	A
HCM 95th %tile Q(veh)	0	-	-	0	-

Intersection	
Int Delay, s/veh	2.6

Movement	EBT	EBR	WBL	WBT	NBL	NBR
Vol, veh/h	303	114	99	308	32	87
Conflicting Peds, #/hr	0	0	0	0	0	0
Sign Control	Free	Free	Free	Free	Stop	Stop
RT Channelized	-	None	-	None	-	None
Storage Length	-	-	250	-	0	0
Veh in Median Storage, #	0	-	-	0	0	-
Grade, %	0	-	-	0	0	-
Peak Hour Factor	94	94	94	94	94	94
Heavy Vehicles, %	2	2	2	2	2	2
Mvmt Flow	322	121	105	328	34	93

Major/Minor	Major1		Major2		Minor1	
Conflicting Flow All	0	0	444	0	921	383
Stage 1	-	-	-	-	383	-
Stage 2	-	-	-	-	538	-
Critical Hdwy	-	-	4.12	-	6.42	6.22
Critical Hdwy Stg 1	-	-	-	-	5.42	-
Critical Hdwy Stg 2	-	-	-	-	5.42	-
Follow-up Hdwy	-	-	2.218	-	3.518	3.318
Pot Cap-1 Maneuver	-	-	1116	-	300	664
Stage 1	-	-	-	-	689	-
Stage 2	-	-	-	-	585	-
Platoon blocked, %	-	-		-		
Mov Cap-1 Maneuver	-	-	1116	-	272	664
Mov Cap-2 Maneuver	-	-	-	-	272	-
Stage 1	-	-	-	-	689	-
Stage 2	-	-	-	-	530	-

Approach	EB	WB	NB
HCM Control Delay, s	0	2.1	13.7
HCM LOS			B

Minor Lane/Major Mvmt	NBLn1	NBLn2	EBT	EBR	WBL	WBT
Capacity (veh/h)	272	664	-	-	1116	-
HCM Lane V/C Ratio	0.125	0.139	-	-	0.094	-
HCM Control Delay (s)	20.1	11.3	-	-	8.6	-
HCM Lane LOS	C	B	-	-	A	-
HCM 95th %tile Q(veh)	0.4	0.5	-	-	0.3	-

Intersection	
Int Delay, s/veh	5.1

Movement	EBT	EBR	WBL	WBT	NBL	NBR
Vol, veh/h	347	108	171	295	39	189
Conflicting Peds, #/hr	0	0	0	0	0	0
Sign Control	Free	Free	Free	Free	Stop	Stop
RT Channelized	-	None	-	None	-	None
Storage Length	-	-	250	-	0	0
Veh in Median Storage, #	0	-	-	0	0	-
Grade, %	0	-	-	0	0	-
Peak Hour Factor	84	84	84	84	84	84
Heavy Vehicles, %	2	2	2	2	2	2
Mvmt Flow	413	129	204	351	46	225

Major/Minor	Major1		Major2		Minor1	
Conflicting Flow All	0	0	542	0	1235	477
Stage 1	-	-	-	-	477	-
Stage 2	-	-	-	-	758	-
Critical Hdwy	-	-	4.12	-	6.42	6.22
Critical Hdwy Stg 1	-	-	-	-	5.42	-
Critical Hdwy Stg 2	-	-	-	-	5.42	-
Follow-up Hdwy	-	-	2.218	-	3.518	3.318
Pot Cap-1 Maneuver	-	-	1027	-	195	588
Stage 1	-	-	-	-	624	-
Stage 2	-	-	-	-	463	-
Platoon blocked, %	-	-		-		
Mov Cap-1 Maneuver	-	-	1027	-	156	588
Mov Cap-2 Maneuver	-	-	-	-	156	-
Stage 1	-	-	-	-	624	-
Stage 2	-	-	-	-	371	-

Approach	EB	WB	NB
HCM Control Delay, s	0	3.4	18.8
HCM LOS			C

Minor Lane/Major Mvmt	NBLn1	NBLn2	EBT	EBR	WBL	WBT
Capacity (veh/h)	156	588	-	-	1027	-
HCM Lane V/C Ratio	0.298	0.383	-	-	0.198	-
HCM Control Delay (s)	37.6	14.9	-	-	9.4	-
HCM Lane LOS	E	B	-	-	A	-
HCM 95th %tile Q(veh)	1.2	1.8	-	-	0.7	-

Intersection	
Int Delay, s/veh	4.5

Movement	EBT	EBR	WBL	WBT	NBL	NBR
Vol, veh/h	312	96	231	317	12	220
Conflicting Peds, #/hr	0	0	0	0	0	0
Sign Control	Free	Free	Free	Free	Stop	Stop
RT Channelized	-	None	-	None	-	None
Storage Length	-	-	250	-	0	0
Veh in Median Storage, #	0	-	-	0	0	-
Grade, %	0	-	-	0	0	-
Peak Hour Factor	94	94	94	94	94	94
Heavy Vehicles, %	2	2	2	2	2	2
Mvmt Flow	332	102	246	337	13	234

Major/Minor	Major1		Major2		Minor1	
Conflicting Flow All	0	0	434	0	1212	383
Stage 1	-	-	-	-	383	-
Stage 2	-	-	-	-	829	-
Critical Hdwy	-	-	4.12	-	6.42	6.22
Critical Hdwy Stg 1	-	-	-	-	5.42	-
Critical Hdwy Stg 2	-	-	-	-	5.42	-
Follow-up Hdwy	-	-	2.218	-	3.518	3.318
Pot Cap-1 Maneuver	-	-	1126	-	201	664
Stage 1	-	-	-	-	689	-
Stage 2	-	-	-	-	429	-
Platoon blocked, %	-	-		-		
Mov Cap-1 Maneuver	-	-	1126	-	157	664
Mov Cap-2 Maneuver	-	-	-	-	157	-
Stage 1	-	-	-	-	689	-
Stage 2	-	-	-	-	335	-

Approach	EB	WB	NB
HCM Control Delay, s	0	3.8	14.2
HCM LOS			B

Minor Lane/Major Mvmt	NBLn1	NBLn2	EBT	EBR	WBL	WBT
Capacity (veh/h)	157	664	-	-	1126	-
HCM Lane V/C Ratio	0.081	0.352	-	-	0.218	-
HCM Control Delay (s)	30	13.3	-	-	9.1	-
HCM Lane LOS	D	B	-	-	A	-
HCM 95th %tile Q(veh)	0.3	1.6	-	-	0.8	-

Intersection	
Int Delay, s/veh	1.2

Movement	EBT	EBR	WBL	WBT	NBL	NBR
Vol, veh/h	238	98	45	279	13	28
Conflicting Peds, #/hr	0	0	0	0	0	0
Sign Control	Free	Free	Free	Free	Stop	Stop
RT Channelized	-	None	-	None	-	None
Storage Length	-	-	-	-	0	-
Veh in Median Storage, #	0	-	-	0	0	-
Grade, %	0	-	-	0	0	-
Peak Hour Factor	94	94	94	94	94	94
Heavy Vehicles, %	2	2	2	2	2	2
Mvmt Flow	253	104	48	297	14	30

Major/Minor	Major1		Major2		Minor1	
Conflicting Flow All	0	0	357	0	698	305
Stage 1	-	-	-	-	305	-
Stage 2	-	-	-	-	393	-
Critical Hdwy	-	-	4.12	-	6.42	6.22
Critical Hdwy Stg 1	-	-	-	-	5.42	-
Critical Hdwy Stg 2	-	-	-	-	5.42	-
Follow-up Hdwy	-	-	2.218	-	3.518	3.318
Pot Cap-1 Maneuver	-	-	1202	-	407	735
Stage 1	-	-	-	-	748	-
Stage 2	-	-	-	-	682	-
Platoon blocked, %	-	-		-		
Mov Cap-1 Maneuver	-	-	1202	-	387	735
Mov Cap-2 Maneuver	-	-	-	-	387	-
Stage 1	-	-	-	-	748	-
Stage 2	-	-	-	-	649	-

Approach	EB	WB	NB
HCM Control Delay, s	0	1.1	11.8
HCM LOS			B

Minor Lane/Major Mvmt	NBLn1	EBT	EBR	WBL	WBT
Capacity (veh/h)	572	-	-	1202	-
HCM Lane V/C Ratio	0.076	-	-	0.04	-
HCM Control Delay (s)	11.8	-	-	8.1	0
HCM Lane LOS	B	-	-	A	A
HCM 95th %tile Q(veh)	0.2	-	-	0.1	-

Intersection	
Int Delay, s/veh	2.4

Movement	EBT	EBR	WBL	WBT	NBL	NBR
Vol, veh/h	177	35	21	118	32	46
Conflicting Peds, #/hr	0	0	0	0	0	0
Sign Control	Free	Free	Free	Free	Stop	Stop
RT Channelized	-	None	-	None	-	None
Storage Length	-	-	-	-	0	-
Veh in Median Storage, #	0	-	-	0	0	-
Grade, %	0	-	-	0	0	-
Peak Hour Factor	84	84	84	84	84	84
Heavy Vehicles, %	2	2	2	2	2	2
Mvmt Flow	211	42	25	140	38	55

Major/Minor	Major1		Major2		Minor1	
Conflicting Flow All	0	0	252	0	422	232
Stage 1	-	-	-	-	232	-
Stage 2	-	-	-	-	190	-
Critical Hdwy	-	-	4.12	-	6.42	6.22
Critical Hdwy Stg 1	-	-	-	-	5.42	-
Critical Hdwy Stg 2	-	-	-	-	5.42	-
Follow-up Hdwy	-	-	2.218	-	3.518	3.318
Pot Cap-1 Maneuver	-	-	1313	-	588	807
Stage 1	-	-	-	-	807	-
Stage 2	-	-	-	-	842	-
Platoon blocked, %	-	-		-		
Mov Cap-1 Maneuver	-	-	1313	-	576	807
Mov Cap-2 Maneuver	-	-	-	-	576	-
Stage 1	-	-	-	-	807	-
Stage 2	-	-	-	-	824	-

Approach	EB	WB	NB
HCM Control Delay, s	0	1.2	11
HCM LOS			B

Minor Lane/Major Mvmt	NBLn1	EBT	EBR	WBL	WBT
Capacity (veh/h)	693	-	-	1313	-
HCM Lane V/C Ratio	0.134	-	-	0.019	-
HCM Control Delay (s)	11	-	-	7.8	0
HCM Lane LOS	B	-	-	A	A
HCM 95th %tile Q(veh)	0.5	-	-	0.1	-

Intersection	
Int Delay, s/veh	0.8

Movement	EBT	EBR	WBL	WBT	NBL	NBR
Vol, veh/h	23	4	4	40	1	2
Conflicting Peds, #/hr	0	0	0	0	0	0
Sign Control	Free	Free	Free	Free	Stop	Stop
RT Channelized	-	None	-	None	-	None
Storage Length	-	-	-	-	0	-
Veh in Median Storage, #	0	-	-	0	0	-
Grade, %	0	-	-	0	0	-
Peak Hour Factor	94	94	94	94	94	94
Heavy Vehicles, %	2	2	2	2	2	2
Mvmt Flow	24	4	4	43	1	2

Major/Minor	Major1		Major2		Minor1	
Conflicting Flow All	0	0	29	0	78	27
Stage 1	-	-	-	-	27	-
Stage 2	-	-	-	-	51	-
Critical Hdwy	-	-	4.12	-	6.42	6.22
Critical Hdwy Stg 1	-	-	-	-	5.42	-
Critical Hdwy Stg 2	-	-	-	-	5.42	-
Follow-up Hdwy	-	-	2.218	-	3.518	3.318
Pot Cap-1 Maneuver	-	-	1584	-	925	1048
Stage 1	-	-	-	-	996	-
Stage 2	-	-	-	-	971	-
Platoon blocked, %	-	-		-		
Mov Cap-1 Maneuver	-	-	1584	-	922	1048
Mov Cap-2 Maneuver	-	-	-	-	922	-
Stage 1	-	-	-	-	996	-
Stage 2	-	-	-	-	968	-

Approach	EB	WB	NB
HCM Control Delay, s	0	0.7	8.6
HCM LOS			A

Minor Lane/Major Mvmt	NBLn1	EBT	EBR	WBL	WBT
Capacity (veh/h)	1002	-	-	1584	-
HCM Lane V/C Ratio	0.003	-	-	0.003	-
HCM Control Delay (s)	8.6	-	-	7.3	0
HCM Lane LOS	A	-	-	A	A
HCM 95th %tile Q(veh)	0	-	-	0	-

Intersection	
Int Delay, s/veh	2.6

Movement	EBT	EBR	WBL	WBT	NBL	NBR
Vol, veh/h	319	120	102	327	32	89
Conflicting Peds, #/hr	0	0	0	0	0	0
Sign Control	Free	Free	Free	Free	Stop	Stop
RT Channelized	-	None	-	None	-	None
Storage Length	-	-	250	-	0	0
Veh in Median Storage, #	0	-	-	0	0	-
Grade, %	0	-	-	0	0	-
Peak Hour Factor	94	94	94	94	94	94
Heavy Vehicles, %	2	2	2	2	2	2
Mvmt Flow	339	128	109	348	34	95

Major/Minor	Major1		Major2		Minor1	
Conflicting Flow All	0	0	467	0	968	403
Stage 1	-	-	-	-	403	-
Stage 2	-	-	-	-	565	-
Critical Hdwy	-	-	4.12	-	6.42	6.22
Critical Hdwy Stg 1	-	-	-	-	5.42	-
Critical Hdwy Stg 2	-	-	-	-	5.42	-
Follow-up Hdwy	-	-	2.218	-	3.518	3.318
Pot Cap-1 Maneuver	-	-	1094	-	282	647
Stage 1	-	-	-	-	675	-
Stage 2	-	-	-	-	569	-
Platoon blocked, %	-	-		-		
Mov Cap-1 Maneuver	-	-	1094	-	254	647
Mov Cap-2 Maneuver	-	-	-	-	254	-
Stage 1	-	-	-	-	675	-
Stage 2	-	-	-	-	512	-

Approach	EB	WB	NB
HCM Control Delay, s	0	2.1	14.1
HCM LOS			B

Minor Lane/Major Mvmt	NBLn1	NBLn2	EBT	EBR	WBL	WBT
Capacity (veh/h)	254	647	-	-	1094	-
HCM Lane V/C Ratio	0.134	0.146	-	-	0.099	-
HCM Control Delay (s)	21.4	11.5	-	-	8.7	-
HCM Lane LOS	C	B	-	-	A	-
HCM 95th %tile Q(veh)	0.5	0.5	-	-	0.3	-

Intersection	
Int Delay, s/veh	5.3

Movement	EBT	EBR	WBL	WBT	NBL	NBR
Vol, veh/h	358	111	172	303	41	192
Conflicting Peds, #/hr	0	0	0	0	0	0
Sign Control	Free	Free	Free	Free	Stop	Stop
RT Channelized	-	None	-	None	-	None
Storage Length	-	-	250	-	0	0
Veh in Median Storage, #	0	-	-	0	0	-
Grade, %	0	-	-	0	0	-
Peak Hour Factor	84	84	84	84	84	84
Heavy Vehicles, %	2	2	2	2	2	2
Mvmt Flow	426	132	205	361	49	229

Major/Minor	Major1		Major2		Minor1	
Conflicting Flow All	0	0	558	0	1262	492
Stage 1	-	-	-	-	492	-
Stage 2	-	-	-	-	770	-
Critical Hdwy	-	-	4.12	-	6.42	6.22
Critical Hdwy Stg 1	-	-	-	-	5.42	-
Critical Hdwy Stg 2	-	-	-	-	5.42	-
Follow-up Hdwy	-	-	2.218	-	3.518	3.318
Pot Cap-1 Maneuver	-	-	1013	-	188	577
Stage 1	-	-	-	-	615	-
Stage 2	-	-	-	-	457	-
Platoon blocked, %	-	-		-		
Mov Cap-1 Maneuver	-	-	1013	-	150	577
Mov Cap-2 Maneuver	-	-	-	-	150	-
Stage 1	-	-	-	-	615	-
Stage 2	-	-	-	-	365	-

Approach	EB	WB	NB
HCM Control Delay, s	0	3.4	19.7
HCM LOS			C

Minor Lane/Major Mvmt	NBLn1	NBLn2	EBT	EBR	WBL	WBT
Capacity (veh/h)	150	577	-	-	1013	-
HCM Lane V/C Ratio	0.325	0.396	-	-	0.202	-
HCM Control Delay (s)	40.2	15.3	-	-	9.5	-
HCM Lane LOS	E	C	-	-	A	-
HCM 95th %tile Q(veh)	1.3	1.9	-	-	0.8	-

Intersection	
Int Delay, s/veh	4.5

Movement	EBT	EBR	WBL	WBT	NBL	NBR
Vol, veh/h	313	96	231	319	12	220
Conflicting Peds, #/hr	0	0	0	0	0	0
Sign Control	Free	Free	Free	Free	Stop	Stop
RT Channelized	-	None	-	None	-	None
Storage Length	-	-	250	-	0	0
Veh in Median Storage, #	0	-	-	0	0	-
Grade, %	0	-	-	0	0	-
Peak Hour Factor	94	94	94	94	94	94
Heavy Vehicles, %	2	2	2	2	2	2
Mvmt Flow	333	102	246	339	13	234

Major/Minor	Major1		Major2		Minor1	
Conflicting Flow All	0	0	435	0	1215	384
Stage 1	-	-	-	-	384	-
Stage 2	-	-	-	-	831	-
Critical Hdwy	-	-	4.12	-	6.42	6.22
Critical Hdwy Stg 1	-	-	-	-	5.42	-
Critical Hdwy Stg 2	-	-	-	-	5.42	-
Follow-up Hdwy	-	-	2.218	-	3.518	3.318
Pot Cap-1 Maneuver	-	-	1125	-	200	664
Stage 1	-	-	-	-	688	-
Stage 2	-	-	-	-	428	-
Platoon blocked, %	-	-		-		
Mov Cap-1 Maneuver	-	-	1125	-	156	664
Mov Cap-2 Maneuver	-	-	-	-	156	-
Stage 1	-	-	-	-	688	-
Stage 2	-	-	-	-	334	-

Approach	EB	WB	NB
HCM Control Delay, s	0	3.8	14.2
HCM LOS			B

Minor Lane/Major Mvmt	NBLn1	NBLn2	EBT	EBR	WBL	WBT
Capacity (veh/h)	156	664	-	-	1125	-
HCM Lane V/C Ratio	0.082	0.352	-	-	0.218	-
HCM Control Delay (s)	30.1	13.3	-	-	9.1	-
HCM Lane LOS	D	B	-	-	A	-
HCM 95th %tile Q(veh)	0.3	1.6	-	-	0.8	-

Intersection	
Int Delay, s/veh	2.8

Movement	EBL	EBT	EBR	WBL	WBT	WBR	NBL	NBT	NBR	SBL	SBT	SBR
Vol, veh/h	112	216	9	3	183	9	0	0	0	17	9	31
Conflicting Peds, #/hr	0	0	0	0	0	0	0	0	0	0	0	0
Sign Control	Free	Free	Free	Free	Free	Free	Stop	Stop	Stop	Stop	Stop	Stop
RT Channelized	-	-	None	-	-	None	-	-	None	-	-	None
Storage Length	-	-	-	-	-	-	-	-	-	-	-	-
Veh in Median Storage, #	-	0	-	-	0	-	-	0	-	-	0	-
Grade, %	-	0	-	-	0	-	-	0	-	-	0	-
Peak Hour Factor	93	93	93	93	93	93	93	93	93	93	93	93
Heavy Vehicles, %	2	2	2	2	2	2	2	2	2	2	2	2
Mvmt Flow	120	232	10	3	197	10	0	0	0	18	10	33

Major/Minor	Major1			Major2			Minor1			Minor2		
Conflicting Flow All	206	0	0	242	0	0	708	691	237	686	691	202
Stage 1	-	-	-	-	-	-	478	478	-	208	208	-
Stage 2	-	-	-	-	-	-	230	213	-	478	483	-
Critical Hdwy	4.12	-	-	4.12	-	-	7.12	6.52	6.22	7.12	6.52	6.22
Critical Hdwy Stg 1	-	-	-	-	-	-	6.12	5.52	-	6.12	5.52	-
Critical Hdwy Stg 2	-	-	-	-	-	-	6.12	5.52	-	6.12	5.52	-
Follow-up Hdwy	2.218	-	-	2.218	-	-	3.518	4.018	3.318	3.518	4.018	3.318
Pot Cap-1 Maneuver	1365	-	-	1324	-	-	350	368	802	362	368	839
Stage 1	-	-	-	-	-	-	568	556	-	794	730	-
Stage 2	-	-	-	-	-	-	773	726	-	568	553	-
Platoon blocked, %		-	-		-	-						
Mov Cap-1 Maneuver	1365	-	-	1324	-	-	302	329	802	333	329	839
Mov Cap-2 Maneuver	-	-	-	-	-	-	302	329	-	333	329	-
Stage 1	-	-	-	-	-	-	510	499	-	713	728	-
Stage 2	-	-	-	-	-	-	730	724	-	510	497	-

Approach	EB	WB	NB	SB
HCM Control Delay, s	2.6	0.1	0	13.3
HCM LOS			A	B

Minor Lane/Major Mvmt	NBLn1	EBL	EBT	EBR	WBL	WBT	WBR	SBLn1
Capacity (veh/h)	-	1365	-	-	1324	-	-	494
HCM Lane V/C Ratio	-	0.088	-	-	0.002	-	-	0.124
HCM Control Delay (s)	0	7.9	0	-	7.7	0	-	13.3
HCM Lane LOS	A	A	A	-	A	A	-	B
HCM 95th %tile Q(veh)	-	0.3	-	-	0	-	-	0.4

Intersection	
Int Delay, s/veh	2.8

Movement	EBL	EBT	EBR	WBL	WBT	WBR	NBL	NBT	NBR	SBL	SBT	SBR
Vol, veh/h	33	182	2	1	285	9	23	0	4	4	2	86
Conflicting Peds, #/hr	0	0	0	0	0	0	0	0	0	0	0	0
Sign Control	Free	Free	Free	Free	Free	Free	Stop	Stop	Stop	Stop	Stop	Stop
RT Channelized	-	-	None	-	-	None	-	-	None	-	-	None
Storage Length	-	-	-	-	-	-	-	-	-	-	-	-
Veh in Median Storage, #	-	0	-	-	0	-	-	0	-	-	0	-
Grade, %	-	0	-	-	0	-	-	0	-	-	0	-
Peak Hour Factor	85	85	85	85	85	85	85	85	85	85	85	85
Heavy Vehicles, %	2	2	2	2	2	2	2	2	2	2	2	2
Mvmt Flow	39	214	2	1	335	11	27	0	5	5	2	101

Major/Minor	Major1			Major2			Minor1			Minor2		
Conflicting Flow All	346	0	0	216	0	0	688	641	215	638	637	341
Stage 1	-	-	-	-	-	-	293	293	-	343	343	-
Stage 2	-	-	-	-	-	-	395	348	-	295	294	-
Critical Hdwy	4.12	-	-	4.12	-	-	7.12	6.52	6.22	7.12	6.52	6.22
Critical Hdwy Stg 1	-	-	-	-	-	-	6.12	5.52	-	6.12	5.52	-
Critical Hdwy Stg 2	-	-	-	-	-	-	6.12	5.52	-	6.12	5.52	-
Follow-up Hdwy	2.218	-	-	2.218	-	-	3.518	4.018	3.318	3.518	4.018	3.318
Pot Cap-1 Maneuver	1213	-	-	1354	-	-	360	393	825	389	395	701
Stage 1	-	-	-	-	-	-	715	670	-	672	637	-
Stage 2	-	-	-	-	-	-	630	634	-	713	670	-
Platoon blocked, %		-	-		-	-						
Mov Cap-1 Maneuver	1213	-	-	1354	-	-	298	378	825	376	380	701
Mov Cap-2 Maneuver	-	-	-	-	-	-	298	378	-	376	380	-
Stage 1	-	-	-	-	-	-	689	645	-	647	636	-
Stage 2	-	-	-	-	-	-	537	633	-	683	645	-

Approach	EB	WB	NB	SB
HCM Control Delay, s	1.2	0	17.1	11.5
HCM LOS			C	B

Minor Lane/Major Mvmt	NBLn1	EBL	EBT	EBR	WBL	WBT	WBR	SBLn1
Capacity (veh/h)	329	1213	-	-	1354	-	-	664
HCM Lane V/C Ratio	0.097	0.032	-	-	0.001	-	-	0.163
HCM Control Delay (s)	17.1	8.1	0	-	7.7	0	-	11.5
HCM Lane LOS	C	A	A	-	A	A	-	B
HCM 95th %tile Q(veh)	0.3	0.1	-	-	0	-	-	0.6

Intersection	
Int Delay, s/veh	0.8

Movement	EBL	EBT	EBR	WBL	WBT	WBR	NBL	NBT	NBR	SBL	SBT	SBR
Vol, veh/h	2	87	0	0	59	1	0	0	0	9	0	2
Conflicting Peds, #/hr	0	0	0	0	0	0	0	0	0	0	0	0
Sign Control	Free	Free	Free	Free	Free	Free	Stop	Stop	Stop	Stop	Stop	Stop
RT Channelized	-	-	None	-	-	None	-	-	None	-	-	None
Storage Length	-	-	-	-	-	-	-	-	-	-	-	-
Veh in Median Storage, #	-	0	-	-	0	-	-	0	-	-	0	-
Grade, %	-	0	-	-	0	-	-	0	-	-	0	-
Peak Hour Factor	93	93	93	93	93	93	93	93	93	93	93	93
Heavy Vehicles, %	2	2	2	2	2	2	2	2	2	2	2	2
Mvmt Flow	2	94	0	0	63	1	0	0	0	10	0	2

Major/Minor	Major1			Major2			Minor1			Minor2		
Conflicting Flow All	65	0	0	94	0	0	163	163	94	162	162	64
Stage 1	-	-	-	-	-	-	98	98	-	64	64	-
Stage 2	-	-	-	-	-	-	65	65	-	98	98	-
Critical Hdwy	4.12	-	-	4.12	-	-	7.12	6.52	6.22	7.12	6.52	6.22
Critical Hdwy Stg 1	-	-	-	-	-	-	6.12	5.52	-	6.12	5.52	-
Critical Hdwy Stg 2	-	-	-	-	-	-	6.12	5.52	-	6.12	5.52	-
Follow-up Hdwy	2.218	-	-	2.218	-	-	3.518	4.018	3.318	3.518	4.018	3.318
Pot Cap-1 Maneuver	1537	-	-	1500	-	-	802	729	963	803	730	1000
Stage 1	-	-	-	-	-	-	908	814	-	947	842	-
Stage 2	-	-	-	-	-	-	946	841	-	908	814	-
Platoon blocked, %		-	-		-	-						
Mov Cap-1 Maneuver	1537	-	-	1500	-	-	800	728	963	802	729	1000
Mov Cap-2 Maneuver	-	-	-	-	-	-	800	728	-	802	729	-
Stage 1	-	-	-	-	-	-	907	813	-	946	842	-
Stage 2	-	-	-	-	-	-	944	841	-	907	813	-

Approach	EB	WB	NB	SB
HCM Control Delay, s	0.2	0	0	9.4
HCM LOS			A	A

Minor Lane/Major Mvmt	NBLn1	EBL	EBT	EBR	WBL	WBT	WBR	SBLn1
Capacity (veh/h)	-	1537	-	-	1500	-	-	832
HCM Lane V/C Ratio	-	0.001	-	-	-	-	-	0.014
HCM Control Delay (s)	0	7.3	0	-	0	-	-	9.4
HCM Lane LOS	A	A	A	-	A	-	-	A
HCM 95th %tile Q(veh)	-	0	-	-	0	-	-	0

Intersection	
Int Delay, s/veh	7

Movement	EBL	EBT	EBR	WBL	WBT	WBR	NBL	NBT	NBR	SBL	SBT	SBR
Vol, veh/h	283	216	9	3	183	18	0	0	0	24	9	201
Conflicting Peds, #/hr	0	0	0	0	0	0	0	0	0	0	0	0
Sign Control	Free	Free	Free	Free	Free	Free	Stop	Stop	Stop	Stop	Stop	Stop
RT Channelized	-	-	None	-	-	None	-	-	None	-	-	None
Storage Length	-	-	-	-	-	-	-	-	-	-	-	-
Veh in Median Storage, #	-	0	-	-	0	-	-	0	-	-	0	-
Grade, %	-	0	-	-	0	-	-	0	-	-	0	-
Peak Hour Factor	93	93	93	93	93	93	93	93	93	93	93	93
Heavy Vehicles, %	2	2	2	2	2	2	2	2	2	2	2	2
Mvmt Flow	304	232	10	3	197	19	0	0	0	26	10	216

Major/Minor	Major1			Major2			Minor1			Minor2		
Conflicting Flow All	216	0	0	242	0	0	1172	1069	237	1059	1064	206
Stage 1	-	-	-	-	-	-	846	846	-	213	213	-
Stage 2	-	-	-	-	-	-	326	223	-	846	851	-
Critical Hdwy	4.12	-	-	4.12	-	-	7.12	6.52	6.22	7.12	6.52	6.22
Critical Hdwy Stg 1	-	-	-	-	-	-	6.12	5.52	-	6.12	5.52	-
Critical Hdwy Stg 2	-	-	-	-	-	-	6.12	5.52	-	6.12	5.52	-
Follow-up Hdwy	2.218	-	-	2.218	-	-	3.518	4.018	3.318	3.518	4.018	3.318
Pot Cap-1 Maneuver	1354	-	-	1324	-	-	169	221	802	202	223	835
Stage 1	-	-	-	-	-	-	357	378	-	789	726	-
Stage 2	-	-	-	-	-	-	687	719	-	357	376	-
Platoon blocked, %		-	-		-	-						
Mov Cap-1 Maneuver	1354	-	-	1324	-	-	96	163	802	161	165	835
Mov Cap-2 Maneuver	-	-	-	-	-	-	96	163	-	161	165	-
Stage 1	-	-	-	-	-	-	264	280	-	584	724	-
Stage 2	-	-	-	-	-	-	501	717	-	264	278	-

Approach	EB	WB	NB	SB
HCM Control Delay, s	4.7	0.1	0	17.9
HCM LOS			A	C

Minor Lane/Major Mvmt	NBLn1	EBL	EBT	EBR	WBL	WBT	WBR	SBLn1
Capacity (veh/h)	-	1354	-	-	1324	-	-	527
HCM Lane V/C Ratio	-	0.225	-	-	0.002	-	-	0.477
HCM Control Delay (s)	0	8.4	0	-	7.7	0	-	17.9
HCM Lane LOS	A	A	A	-	A	A	-	C
HCM 95th %tile Q(veh)	-	0.9	-	-	0	-	-	2.6

Intersection	
Int Delay, s/veh	195.2

Movement	EBL	EBT	EBR	WBL	WBT	WBR	NBL	NBT	NBR	SBL	SBT	SBR
Vol, veh/h	483	182	2	1	285	30	23	0	4	23	2	520
Conflicting Peds, #/hr	0	0	0	0	0	0	0	0	0	0	0	0
Sign Control	Free	Free	Free	Free	Free	Free	Stop	Stop	Stop	Stop	Stop	Stop
RT Channelized	-	-	None	-	-	None	-	-	None	-	-	None
Storage Length	-	-	-	-	-	-	-	-	-	-	-	-
Veh in Median Storage, #	-	0	-	-	0	-	-	0	-	-	0	-
Grade, %	-	0	-	-	0	-	-	0	-	-	0	-
Peak Hour Factor	85	85	85	85	85	85	85	85	85	85	85	85
Heavy Vehicles, %	2	2	2	2	2	2	2	2	2	2	2	2
Mvmt Flow	568	214	2	1	335	35	27	0	5	27	2	612

Major/Minor	Major1			Major2			Minor1			Minor2		
Conflicting Flow All	371	0	0	216	0	0	2014	1725	215	1709	1708	353
Stage 1	-	-	-	-	-	-	1352	1352	-	355	355	-
Stage 2	-	-	-	-	-	-	662	373	-	1354	1353	-
Critical Hdwy	4.12	-	-	4.12	-	-	7.12	6.52	6.22	7.12	6.52	6.22
Critical Hdwy Stg 1	-	-	-	-	-	-	6.12	5.52	-	6.12	5.52	-
Critical Hdwy Stg 2	-	-	-	-	-	-	6.12	5.52	-	6.12	5.52	-
Follow-up Hdwy	2.218	-	-	2.218	-	-	3.518	4.018	3.318	3.518	4.018	3.318
Pot Cap-1 Maneuver	1188	-	-	1354	-	-	44	89	825	72	91	691
Stage 1	-	-	-	-	-	-	185	218	-	662	630	-
Stage 2	-	-	-	-	-	-	451	618	-	185	218	-
Platoon blocked, %		-	-		-	-						
Mov Cap-1 Maneuver	1188	-	-	1354	-	-	~ 3	41	825	41	41	691
Mov Cap-2 Maneuver	-	-	-	-	-	-	~ 3	41	-	41	41	-
Stage 1	-	-	-	-	-	-	84	99	-	302	629	-
Stage 2	-	-	-	-	-	-	51	617	-	84	99	-

Approach	EB	WB	NB	SB
HCM Control Delay, s	7.8	0	$ 4844.8	$ 307.4
HCM LOS			F	F

Minor Lane/Major Mvmt	NBLn1	EBL	EBT	EBR	WBL	WBT	WBR	SBLn1
Capacity (veh/h)	4	1188	-	-	1354	-	-	400
HCM Lane V/C Ratio	7.941	0.478	-	-	0.001	-	-	1.603
HCM Control Delay (s)	$ 4844.8	10.8	0	-	7.7	0		$ 307.4
HCM Lane LOS	F	B	A	-	A	A	-	F
HCM 95th %tile Q(veh)	5.6	2.7	-	-	0	-	-	36.7

Notes

~: Volume exceeds capacity $: Delay exceeds 300s +: Computation Not Defined *: All major volume in platoon

Intersection	
Int Delay, s/veh	119.2

Movement	EBL	EBT	EBR	WBL	WBT	WBR	NBL	NBT	NBR	SBL	SBT	SBR
Vol, veh/h	662	87	0	0	59	32	0	0	0	37	0	661
Conflicting Peds, #/hr	0	0	0	0	0	0	0	0	0	0	0	0
Sign Control	Free	Free	Free	Free	Free	Free	Stop	Stop	Stop	Stop	Stop	Stop
RT Channelized	-	-	None	-	-	None	-	-	None	-	-	None
Storage Length	-	-	-	-	-	-	-	-	-	-	-	-
Veh in Median Storage, #	-	0	-	-	0	-	-	0	-	-	0	-
Grade, %	-	0	-	-	0	-	-	0	-	-	0	-
Peak Hour Factor	93	93	93	93	93	93	93	93	93	93	93	93
Heavy Vehicles, %	2	2	2	2	2	2	2	2	2	2	2	2
Mvmt Flow	712	94	0	0	63	34	0	0	0	40	0	711

Major/Minor	Major1			Major2			Minor1			Minor2		
Conflicting Flow All	98	0	0	94	0	0	1953	1615	94	1598	1598	81
Stage 1	-	-	-	-	-	-	1517	1517	-	81	81	-
Stage 2	-	-	-	-	-	-	436	98	-	1517	1517	-
Critical Hdwy	4.12	-	-	4.12	-	-	7.12	6.52	6.22	7.12	6.52	6.22
Critical Hdwy Stg 1	-	-	-	-	-	-	6.12	5.52	-	6.12	5.52	-
Critical Hdwy Stg 2	-	-	-	-	-	-	6.12	5.52	-	6.12	5.52	-
Follow-up Hdwy	2.218	-	-	2.218	-	-	3.518	4.018	3.318	3.518	4.018	3.318
Pot Cap-1 Maneuver	1495	-	-	1500	-	-	48	104	963	86	106	979
Stage 1	-	-	-	-	-	-	149	182	-	927	828	-
Stage 2	-	-	-	-	-	-	599	814	-	149	182	-
Platoon blocked, %		-	-		-	-						
Mov Cap-1 Maneuver	1495	-	-	1500	-	-	8	52	963	52	53	979
Mov Cap-2 Maneuver	-	-	-	-	-	-	8	52	-	52	53	-
Stage 1	-	-	-	-	-	-	74	91	-	462	828	-
Stage 2	-	-	-	-	-	-	164	814	-	74	91	-

Approach	EB	WB	NB	SB
HCM Control Delay, s	8.5	0	0	253.5
HCM LOS			A	F

Minor Lane/Major Mvmt	NBLn1	EBL	EBT	EBR	WBL	WBT	WBR	SBLn1
Capacity (veh/h)	-	1495	-	-	1500	-	-	503
HCM Lane V/C Ratio	-	0.476	-	-	-	-	-	1.492
HCM Control Delay (s)	0	9.6	0	-	0	-	-	253.5
HCM Lane LOS	A	A	A	-	A	-	-	F
HCM 95th %tile Q(veh)	-	2.7	-	-	0	-	-	38.3

Intersection	
Int Delay, s/veh	2.8

Movement	EBL	EBT	EBR	WBL	WBT	WBR	NBL	NBT	NBR	SBL	SBT	SBR
Vol, veh/h	114	229	9	3	190	9	0	0	0	17	9	32
Conflicting Peds, #/hr	0	0	0	0	0	0	0	0	0	0	0	0
Sign Control	Free	Free	Free	Free	Free	Free	Stop	Stop	Stop	Stop	Stop	Stop
RT Channelized	-	-	None	-	-	None	-	-	None	-	-	None
Storage Length	-	-	-	-	-	-	-	-	-	-	-	-
Veh in Median Storage, #	-	0	-	-	0	-	-	0	-	-	0	-
Grade, %	-	0	-	-	0	-	-	0	-	-	0	-
Peak Hour Factor	93	93	93	93	93	93	93	93	93	93	93	93
Heavy Vehicles, %	2	2	2	2	2	2	2	2	2	2	2	2
Mvmt Flow	123	246	10	3	204	10	0	0	0	18	10	34

Major/Minor	Major1			Major2			Minor1			Minor2		
Conflicting Flow All	214	0	0	256	0	0	734	716	251	712	717	209
Stage 1	-	-	-	-	-	-	496	496	-	216	216	-
Stage 2	-	-	-	-	-	-	238	220	-	496	501	-
Critical Hdwy	4.12	-	-	4.12	-	-	7.12	6.52	6.22	7.12	6.52	6.22
Critical Hdwy Stg 1	-	-	-	-	-	-	6.12	5.52	-	6.12	5.52	-
Critical Hdwy Stg 2	-	-	-	-	-	-	6.12	5.52	-	6.12	5.52	-
Follow-up Hdwy	2.218	-	-	2.218	-	-	3.518	4.018	3.318	3.518	4.018	3.318
Pot Cap-1 Maneuver	1356	-	-	1309	-	-	336	356	788	347	355	831
Stage 1	-	-	-	-	-	-	556	545	-	786	724	-
Stage 2	-	-	-	-	-	-	765	721	-	556	543	-
Platoon blocked, %		-	-		-	-						
Mov Cap-1 Maneuver	1356	-	-	1309	-	-	289	317	788	318	316	831
Mov Cap-2 Maneuver	-	-	-	-	-	-	289	317	-	318	316	-
Stage 1	-	-	-	-	-	-	497	487	-	703	722	-
Stage 2	-	-	-	-	-	-	721	719	-	497	485	-

Approach	EB	WB	NB	SB
HCM Control Delay, s	2.6	0.1	0	13.6
HCM LOS			A	B

Minor Lane/Major Mvmt	NBLn1	EBL	EBT	EBR	WBL	WBT	WBR	SBLn1
Capacity (veh/h)	-	1356	-	-	1309	-	-	482
HCM Lane V/C Ratio	-	0.09	-	-	0.002	-	-	0.129
HCM Control Delay (s)	0	7.9	0	-	7.8	0	-	13.6
HCM Lane LOS	A	A	A	-	A	A	-	B
HCM 95th %tile Q(veh)	-	0.3	-	-	0	-	-	0.4

Intersection	
Int Delay, s/veh	2.8

Movement	EBL	EBT	EBR	WBL	WBT	WBR	NBL	NBT	NBR	SBL	SBT	SBR
Vol, veh/h	34	198	2	1	293	9	23	0	4	4	2	87
Conflicting Peds, #/hr	0	0	0	0	0	0	0	0	0	0	0	0
Sign Control	Free	Free	Free	Free	Free	Free	Stop	Stop	Stop	Stop	Stop	Stop
RT Channelized	-	-	None	-	-	None	-	-	None	-	-	None
Storage Length	-	-	-	-	-	-	-	-	-	-	-	-
Veh in Median Storage, #	-	0	-	-	0	-	-	0	-	-	0	-
Grade, %	-	0	-	-	0	-	-	0	-	-	0	-
Peak Hour Factor	85	85	85	85	85	85	85	85	85	85	85	85
Heavy Vehicles, %	2	2	2	2	2	2	2	2	2	2	2	2
Mvmt Flow	40	233	2	1	345	11	27	0	5	5	2	102

Major/Minor	Major1			Major2			Minor1			Minor2		
Conflicting Flow All	355	0	0	235	0	0	719	672	234	668	667	350
Stage 1	-	-	-	-	-	-	314	314	-	352	352	-
Stage 2	-	-	-	-	-	-	405	358	-	316	315	-
Critical Hdwy	4.12	-	-	4.12	-	-	7.12	6.52	6.22	7.12	6.52	6.22
Critical Hdwy Stg 1	-	-	-	-	-	-	6.12	5.52	-	6.12	5.52	-
Critical Hdwy Stg 2	-	-	-	-	-	-	6.12	5.52	-	6.12	5.52	-
Follow-up Hdwy	2.218	-	-	2.218	-	-	3.518	4.018	3.318	3.518	4.018	3.318
Pot Cap-1 Maneuver	1204	-	-	1332	-	-	344	377	805	372	380	693
Stage 1	-	-	-	-	-	-	697	656	-	665	632	-
Stage 2	-	-	-	-	-	-	622	628	-	695	656	-
Platoon blocked, %		-	-		-	-						
Mov Cap-1 Maneuver	1204	-	-	1332	-	-	283	362	805	359	365	693
Mov Cap-2 Maneuver	-	-	-	-	-	-	283	362	-	359	365	-
Stage 1	-	-	-	-	-	-	671	631	-	640	631	-
Stage 2	-	-	-	-	-	-	528	627	-	665	631	-

Approach	EB	WB	NB	SB
HCM Control Delay, s	1.2	0	17.8	11.6
HCM LOS			C	B

Minor Lane/Major Mvmt	NBLn1	EBL	EBT	EBR	WBL	WBT	WBR	SBLn1
Capacity (veh/h)	313	1204	-	-	1332	-	-	654
HCM Lane V/C Ratio	0.101	0.033	-	-	0.001	-	-	0.167
HCM Control Delay (s)	17.8	8.1	0	-	7.7	0	-	11.6
HCM Lane LOS	C	A	A	-	A	A	-	B
HCM 95th %tile Q(veh)	0.3	0.1	-	-	0	-	-	0.6

Intersection	
Int Delay, s/veh	0.7

Movement	EBL	EBT	EBR	WBL	WBT	WBR	NBL	NBT	NBR	SBL	SBT	SBR
Vol, veh/h	2	96	0	0	62	1	0	0	0	9	0	2
Conflicting Peds, #/hr	0	0	0	0	0	0	0	0	0	0	0	0
Sign Control	Free	Free	Free	Free	Free	Free	Stop	Stop	Stop	Stop	Stop	Stop
RT Channelized	-	-	None	-	-	None	-	-	None	-	-	None
Storage Length	-	-	-	-	-	-	-	-	-	-	-	-
Veh in Median Storage, #	-	0	-	-	0	-	-	0	-	-	0	-
Grade, %	-	0	-	-	0	-	-	0	-	-	0	-
Peak Hour Factor	93	93	93	93	93	93	93	93	93	93	93	93
Heavy Vehicles, %	2	2	2	2	2	2	2	2	2	2	2	2
Mvmt Flow	2	103	0	0	67	1	0	0	0	10	0	2

Major/Minor	Major1			Major2			Minor1			Minor2		
Conflicting Flow All	68	0	0	103	0	0	176	176	103	175	175	67
Stage 1	-	-	-	-	-	-	108	108	-	67	67	-
Stage 2	-	-	-	-	-	-	68	68	-	108	108	-
Critical Hdwy	4.12	-	-	4.12	-	-	7.12	6.52	6.22	7.12	6.52	6.22
Critical Hdwy Stg 1	-	-	-	-	-	-	6.12	5.52	-	6.12	5.52	-
Critical Hdwy Stg 2	-	-	-	-	-	-	6.12	5.52	-	6.12	5.52	-
Follow-up Hdwy	2.218	-	-	2.218	-	-	3.518	4.018	3.318	3.518	4.018	3.318
Pot Cap-1 Maneuver	1533	-	-	1489	-	-	786	717	952	788	718	997
Stage 1	-	-	-	-	-	-	897	806	-	943	839	-
Stage 2	-	-	-	-	-	-	942	838	-	897	806	-
Platoon blocked, %		-	-		-	-						
Mov Cap-1 Maneuver	1533	-	-	1489	-	-	784	716	952	787	717	997
Mov Cap-2 Maneuver	-	-	-	-	-	-	784	716	-	787	717	-
Stage 1	-	-	-	-	-	-	896	805	-	942	839	-
Stage 2	-	-	-	-	-	-	940	838	-	896	805	-

Approach	EB	WB	NB	SB
HCM Control Delay, s	0.2	0	0	9.5
HCM LOS			A	A

Minor Lane/Major Mvmt	NBLn1	EBL	EBT	EBR	WBL	WBT	WBR	SBLn1
Capacity (veh/h)	-	1533	-	-	1489	-	-	818
HCM Lane V/C Ratio	-	0.001	-	-	-	-	-	0.014
HCM Control Delay (s)	0	7.4	0	-	0	-	-	9.5
HCM Lane LOS	A	A	A	-	A	-	-	A
HCM 95th %tile Q(veh)	-	0	-	-	0	-	-	0

Intersection	
Int Delay, s/veh	5.3

Movement	EBL	EBT	EBR	WBL	WBT	WBR	NBL	NBT	NBR	SBL	SBT	SBR
Vol, veh/h	268	229	9	3	190	17	0	0	0	20	9	102
Conflicting Peds, #/hr	0	0	0	0	0	0	0	0	0	0	0	0
Sign Control	Free	Free	Free	Free	Free	Free	Stop	Stop	Stop	Stop	Stop	Stop
RT Channelized	-	-	None	-	-	None	-	-	None	-	-	None
Storage Length	-	-	-	-	-	-	-	-	-	-	-	-
Veh in Median Storage, #	-	0	-	-	0	-	-	0	-	-	0	-
Grade, %	-	0	-	-	0	-	-	0	-	-	0	-
Peak Hour Factor	93	93	93	93	93	93	93	93	93	93	93	93
Heavy Vehicles, %	2	2	2	2	2	2	2	2	2	2	2	2
Mvmt Flow	288	246	10	3	204	18	0	0	0	22	10	110

Major/Minor	Major1			Major2			Minor1			Minor2		
Conflicting Flow All	223	0	0	256	0	0	1107	1056	251	1047	1052	213
Stage 1	-	-	-	-	-	-	827	827	-	220	220	-
Stage 2	-	-	-	-	-	-	280	229	-	827	832	-
Critical Hdwy	4.12	-	-	4.12	-	-	7.12	6.52	6.22	7.12	6.52	6.22
Critical Hdwy Stg 1	-	-	-	-	-	-	6.12	5.52	-	6.12	5.52	-
Critical Hdwy Stg 2	-	-	-	-	-	-	6.12	5.52	-	6.12	5.52	-
Follow-up Hdwy	2.218	-	-	2.218	-	-	3.518	4.018	3.318	3.518	4.018	3.318
Pot Cap-1 Maneuver	1346	-	-	1309	-	-	188	225	788	206	227	827
Stage 1	-	-	-	-	-	-	366	386	-	782	721	-
Stage 2	-	-	-	-	-	-	727	715	-	366	384	-
Platoon blocked, %		-	-		-	-						
Mov Cap-1 Maneuver	1346	-	-	1309	-	-	126	168	788	166	170	827
Mov Cap-2 Maneuver	-	-	-	-	-	-	126	168	-	166	170	-
Stage 1	-	-	-	-	-	-	275	290	-	587	719	-
Stage 2	-	-	-	-	-	-	620	713	-	275	288	-

Approach	EB	WB	NB	SB
HCM Control Delay, s	4.5	0.1	0	16.9
HCM LOS			A	C

Minor Lane/Major Mvmt	NBLn1	EBL	EBT	EBR	WBL	WBT	WBR	SBLn1
Capacity (veh/h)	-	1346	-	-	1309	-	-	441
HCM Lane V/C Ratio	-	0.214	-	-	0.002	-	-	0.319
HCM Control Delay (s)	0	8.4	0	-	7.8	0	-	16.9
HCM Lane LOS	A	A	A	-	A	A	-	C
HCM 95th %tile Q(veh)	-	0.8	-	-	0	-	-	1.4

Intersection	
Int Delay, s/veh	102.1

Movement	EBL	EBT	EBR	WBL	WBT	WBR	NBL	NBT	NBR	SBL	SBT	SBR
Vol, veh/h	406	198	2	1	293	26	23	0	4	21	2	473
Conflicting Peds, #/hr	0	0	0	0	0	0	0	0	0	0	0	0
Sign Control	Free	Free	Free	Free	Free	Free	Stop	Stop	Stop	Stop	Stop	Stop
RT Channelized	-	-	None	-	-	None	-	-	None	-	-	None
Storage Length	-	-	-	-	-	-	-	-	-	-	-	-
Veh in Median Storage, #	-	0	-	-	0	-	-	0	-	-	0	-
Grade, %	-	0	-	-	0	-	-	0	-	-	0	-
Peak Hour Factor	85	85	85	85	85	85	85	85	85	85	85	85
Heavy Vehicles, %	2	2	2	2	2	2	2	2	2	2	2	2
Mvmt Flow	478	233	2	1	345	31	27	0	5	25	2	556

Major/Minor	Major1			Major2			Minor1			Minor2		
Conflicting Flow All	375	0	0	235	0	0	1831	1567	234	1554	1553	360
Stage 1	-	-	-	-	-	-	1189	1189	-	362	362	-
Stage 2	-	-	-	-	-	-	642	378	-	1192	1191	-
Critical Hdwy	4.12	-	-	4.12	-	-	7.12	6.52	6.22	7.12	6.52	6.22
Critical Hdwy Stg 1	-	-	-	-	-	-	6.12	5.52	-	6.12	5.52	-
Critical Hdwy Stg 2	-	-	-	-	-	-	6.12	5.52	-	6.12	5.52	-
Follow-up Hdwy	2.218	-	-	2.218	-	-	3.518	4.018	3.318	3.518	4.018	3.318
Pot Cap-1 Maneuver	1183	-	-	1332	-	-	59	111	805	92	113	684
Stage 1	-	-	-	-	-	-	229	261	-	657	625	-
Stage 2	-	-	-	-	-	-	463	615	-	228	261	-
Platoon blocked, %		-	-		-	-						
Mov Cap-1 Maneuver	1183	-	-	1332	-	-	~ 7	59	805	58	60	684
Mov Cap-2 Maneuver	-	-	-	-	-	-	~ 7	59	-	58	60	-
Stage 1	-	-	-	-	-	-	123	140	-	351	624	-
Stage 2	-	-	-	-	-	-	86	614	-	121	140	-

Approach	EB	WB	NB	SB
HCM Control Delay, s	6.8	0	$ 2241.8	168
HCM LOS			F	F

Minor Lane/Major Mvmt	NBLn1	EBL	EBT	EBR	WBL	WBT	WBR	SBLn1
Capacity (veh/h)	8	1183	-	-	1332	-	-	456
HCM Lane V/C Ratio	3.971	0.404	-	-	0.001	-	-	1.28
HCM Control Delay (s)	$ 2241.8	10.1	0	-	7.7	0	-	168
HCM Lane LOS	F	B	A	-	A	A	-	F
HCM 95th %tile Q(veh)	5.2	2	-	-	0	-	-	24.8

Notes

~: Volume exceeds capacity $: Delay exceeds 300s +: Computation Not Defined *: All major volume in platoon

Intersection	
Int Delay, s/veh	67.7

Movement	EBL	EBT	EBR	WBL	WBT	WBR	NBL	NBT	NBR	SBL	SBT	SBR
Vol, veh/h	605	96	0	0	62	29	0	0	0	35	0	602
Conflicting Peds, #/hr	0	0	0	0	0	0	0	0	0	0	0	0
Sign Control	Free	Free	Free	Free	Free	Free	Stop	Stop	Stop	Stop	Stop	Stop
RT Channelized	-	-	None	-	-	None	-	-	None	-	-	None
Storage Length	-	-	-	-	-	-	-	-	-	-	-	-
Veh in Median Storage, #	-	0	-	-	0	-	-	0	-	-	0	-
Grade, %	-	0	-	-	0	-	-	0	-	-	0	-
Peak Hour Factor	93	93	93	93	93	93	93	93	93	93	93	93
Heavy Vehicles, %	2	2	2	2	2	2	2	2	2	2	2	2
Mvmt Flow	651	103	0	0	67	31	0	0	0	38	0	647

Major/Minor	Major1			Major2			Minor1			Minor2		
Conflicting Flow All	98	0	0	103	0	0	1810	1502	103	1486	1486	82
Stage 1	-	-	-	-	-	-	1404	1404	-	82	82	-
Stage 2	-	-	-	-	-	-	406	98	-	1404	1404	-
Critical Hdwy	4.12	-	-	4.12	-	-	7.12	6.52	6.22	7.12	6.52	6.22
Critical Hdwy Stg 1	-	-	-	-	-	-	6.12	5.52	-	6.12	5.52	-
Critical Hdwy Stg 2	-	-	-	-	-	-	6.12	5.52	-	6.12	5.52	-
Follow-up Hdwy	2.218	-	-	2.218	-	-	3.518	4.018	3.318	3.518	4.018	3.318
Pot Cap-1 Maneuver	1495	-	-	1489	-	-	61	122	952	103	124	978
Stage 1	-	-	-	-	-	-	173	206	-	926	827	-
Stage 2	-	-	-	-	-	-	622	814	-	173	206	-
Platoon blocked, %		-	-		-	-						
Mov Cap-1 Maneuver	1495	-	-	1489	-	-	13	66	952	66	67	978
Mov Cap-2 Maneuver	-	-	-	-	-	-	13	66	-	66	67	-
Stage 1	-	-	-	-	-	-	93	111	-	498	827	-
Stage 2	-	-	-	-	-	-	210	814	-	93	111	-

Approach	EB	WB	NB	SB
HCM Control Delay, s	8	0	0	143.1
HCM LOS			A	F

Minor Lane/Major Mvmt	NBLn1	EBL	EBT	EBR	WBL	WBT	WBR	SBLn1
Capacity (veh/h)	-	1495	-	-	1489	-	-	556
HCM Lane V/C Ratio	-	0.435	-	-	-	-	-	1.232
HCM Control Delay (s)	0	9.2	0	-	0	-	-	143.1
HCM Lane LOS	A	A	A	-	A	-	-	F
HCM 95th %tile Q(veh)	-	2.3	-	-	0	-	-	26

Intersection	
Int Delay, s/veh	2.8

Movement	EBL	EBT	EBR	WBL	WBT	WBR	NBL	NBT	NBR	SBL	SBT	SBR
Vol, veh/h	117	234	9	3	195	9	0	0	0	18	9	32
Conflicting Peds, #/hr	0	0	0	0	0	0	0	0	0	0	0	0
Sign Control	Free	Free	Free	Free	Free	Free	Stop	Stop	Stop	Stop	Stop	Stop
RT Channelized	-	-	None	-	-	None	-	-	None	-	-	None
Storage Length	-	-	-	-	-	-	-	-	-	-	-	-
Veh in Median Storage, #	-	0	-	-	0	-	-	0	-	-	0	-
Grade, %	-	0	-	-	0	-	-	0	-	-	0	-
Peak Hour Factor	93	93	93	93	93	93	93	93	93	93	93	93
Heavy Vehicles, %	2	2	2	2	2	2	2	2	2	2	2	2
Mvmt Flow	126	252	10	3	210	10	0	0	0	19	10	34

Major/Minor	Major1			Major2			Minor1			Minor2		
Conflicting Flow All	219	0	0	261	0	0	751	734	256	729	734	215
Stage 1	-	-	-	-	-	-	508	508	-	221	221	-
Stage 2	-	-	-	-	-	-	243	226	-	508	513	-
Critical Hdwy	4.12	-	-	4.12	-	-	7.12	6.52	6.22	7.12	6.52	6.22
Critical Hdwy Stg 1	-	-	-	-	-	-	6.12	5.52	-	6.12	5.52	-
Critical Hdwy Stg 2	-	-	-	-	-	-	6.12	5.52	-	6.12	5.52	-
Follow-up Hdwy	2.218	-	-	2.218	-	-	3.518	4.018	3.318	3.518	4.018	3.318
Pot Cap-1 Maneuver	1350	-	-	1303	-	-	327	347	783	338	347	825
Stage 1	-	-	-	-	-	-	547	539	-	781	720	-
Stage 2	-	-	-	-	-	-	761	717	-	547	536	-
Platoon blocked, %		-	-		-	-						
Mov Cap-1 Maneuver	1350	-	-	1303	-	-	280	308	783	309	308	825
Mov Cap-2 Maneuver	-	-	-	-	-	-	280	308	-	309	308	-
Stage 1	-	-	-	-	-	-	487	480	-	696	718	-
Stage 2	-	-	-	-	-	-	717	715	-	487	478	-

Approach	EB	WB	NB	SB
HCM Control Delay, s	2.6	0.1	0	13.9
HCM LOS			A	B

Minor Lane/Major Mvmt	NBLn1	EBL	EBT	EBR	WBL	WBT	WBR	SBLn1
Capacity (veh/h)	-	1350	-	-	1303	-	-	467
HCM Lane V/C Ratio	-	0.093	-	-	0.002	-	-	0.136
HCM Control Delay (s)	0	7.9	0	-	7.8	0	-	13.9
HCM Lane LOS	A	A	A	-	A	A	-	B
HCM 95th %tile Q(veh)	-	0.3	-	-	0	-	-	0.5

Intersection	
Int Delay, s/veh	2.9

Movement	EBL	EBT	EBR	WBL	WBT	WBR	NBL	NBT	NBR	SBL	SBT	SBR
Vol, veh/h	34	203	2	1	300	9	24	0	4	4	2	90
Conflicting Peds, #/hr	0	0	0	0	0	0	0	0	0	0	0	0
Sign Control	Free	Free	Free	Free	Free	Free	Stop	Stop	Stop	Stop	Stop	Stop
RT Channelized	-	-	None	-	-	None	-	-	None	-	-	None
Storage Length	-	-	-	-	-	-	-	-	-	-	-	-
Veh in Median Storage, #	-	0	-	-	0	-	-	0	-	-	0	-
Grade, %	-	0	-	-	0	-	-	0	-	-	0	-
Peak Hour Factor	85	85	85	85	85	85	85	85	85	85	85	85
Heavy Vehicles, %	2	2	2	2	2	2	2	2	2	2	2	2
Mvmt Flow	40	239	2	1	353	11	28	0	5	5	2	106

Major/Minor	Major1			Major2			Minor1			Minor2		
Conflicting Flow All	364	0	0	241	0	0	735	686	240	683	682	358
Stage 1	-	-	-	-	-	-	320	320	-	361	361	-
Stage 2	-	-	-	-	-	-	415	366	-	322	321	-
Critical Hdwy	4.12	-	-	4.12	-	-	7.12	6.52	6.22	7.12	6.52	6.22
Critical Hdwy Stg 1	-	-	-	-	-	-	6.12	5.52	-	6.12	5.52	-
Critical Hdwy Stg 2	-	-	-	-	-	-	6.12	5.52	-	6.12	5.52	-
Follow-up Hdwy	2.218	-	-	2.218	-	-	3.518	4.018	3.318	3.518	4.018	3.318
Pot Cap-1 Maneuver	1195	-	-	1326	-	-	335	370	799	363	372	686
Stage 1	-	-	-	-	-	-	692	652	-	657	626	-
Stage 2	-	-	-	-	-	-	615	623	-	690	652	-
Platoon blocked, %		-	-		-	-						
Mov Cap-1 Maneuver	1195	-	-	1326	-	-	273	355	799	350	357	686
Mov Cap-2 Maneuver	-	-	-	-	-	-	273	355	-	350	357	-
Stage 1	-	-	-	-	-	-	665	627	-	631	625	-
Stage 2	-	-	-	-	-	-	518	622	-	659	627	-

Approach	EB	WB	NB	SB
HCM Control Delay, s	1.2	0	18.4	11.7
HCM LOS			C	B

Minor Lane/Major Mvmt	NBLn1	EBL	EBT	EBR	WBL	WBT	WBR	SBLn1
Capacity (veh/h)	301	1195	-	-	1326	-	-	648
HCM Lane V/C Ratio	0.109	0.033	-	-	0.001	-	-	0.174
HCM Control Delay (s)	18.4	8.1	0	-	7.7	0	-	11.7
HCM Lane LOS	C	A	A	-	A	A	-	B
HCM 95th %tile Q(veh)	0.4	0.1	-	-	0	-	-	0.6

Intersection	
Int Delay, s/veh	0.7

Movement	EBL	EBT	EBR	WBL	WBT	WBR	NBL	NBT	NBR	SBL	SBT	SBR
Vol, veh/h	2	99	0	0	63	1	0	0	0	9	0	2
Conflicting Peds, #/hr	0	0	0	0	0	0	0	0	0	0	0	0
Sign Control	Free	Free	Free	Free	Free	Free	Stop	Stop	Stop	Stop	Stop	Stop
RT Channelized	-	-	None	-	-	None	-	-	None	-	-	None
Storage Length	-	-	-	-	-	-	-	-	-	-	-	-
Veh in Median Storage, #	-	0	-	-	0	-	-	0	-	-	0	-
Grade, %	-	0	-	-	0	-	-	0	-	-	0	-
Peak Hour Factor	93	93	93	93	93	93	93	93	93	93	93	93
Heavy Vehicles, %	2	2	2	2	2	2	2	2	2	2	2	2
Mvmt Flow	2	106	0	0	68	1	0	0	0	10	0	2

Major/Minor	Major1			Major2			Minor1			Minor2		
Conflicting Flow All	69	0	0	106	0	0	180	180	106	179	179	68
Stage 1	-	-	-	-	-	-	111	111	-	68	68	-
Stage 2	-	-	-	-	-	-	69	69	-	111	111	-
Critical Hdwy	4.12	-	-	4.12	-	-	7.12	6.52	6.22	7.12	6.52	6.22
Critical Hdwy Stg 1	-	-	-	-	-	-	6.12	5.52	-	6.12	5.52	-
Critical Hdwy Stg 2	-	-	-	-	-	-	6.12	5.52	-	6.12	5.52	-
Follow-up Hdwy	2.218	-	-	2.218	-	-	3.518	4.018	3.318	3.518	4.018	3.318
Pot Cap-1 Maneuver	1532	-	-	1485	-	-	782	714	948	783	715	995
Stage 1	-	-	-	-	-	-	894	804	-	942	838	-
Stage 2	-	-	-	-	-	-	941	837	-	894	804	-
Platoon blocked, %		-	-		-	-						
Mov Cap-1 Maneuver	1532	-	-	1485	-	-	780	713	948	782	714	995
Mov Cap-2 Maneuver	-	-	-	-	-	-	780	713	-	782	714	-
Stage 1	-	-	-	-	-	-	893	803	-	941	838	-
Stage 2	-	-	-	-	-	-	939	837	-	893	803	-

Approach	EB	WB	NB	SB
HCM Control Delay, s	0.1	0	0	9.5
HCM LOS			A	A

Minor Lane/Major Mvmt	NBLn1	EBL	EBT	EBR	WBL	WBT	WBR	SBLn1
Capacity (veh/h)	-	1532	-	-	1485	-	-	814
HCM Lane V/C Ratio	-	0.001	-	-	-	-	-	0.015
HCM Control Delay (s)	0	7.4	0	-	0	-	-	9.5
HCM Lane LOS	A	A	A	-	A	-	-	A
HCM 95th %tile Q(veh)	-	0	-	-	0	-	-	0

Intersection	
Int Delay, s/veh	7.2

Movement	EBL	EBT	EBR	WBL	WBT	WBR	NBL	NBT	NBR	SBL	SBT	SBR
Vol, veh/h	288	234	9	3	195	18	0	0	0	25	9	202
Conflicting Peds, #/hr	0	0	0	0	0	0	0	0	0	0	0	0
Sign Control	Free	Free	Free	Free	Free	Free	Stop	Stop	Stop	Stop	Stop	Stop
RT Channelized	-	-	None	-	-	None	-	-	None	-	-	None
Storage Length	-	-	-	-	-	-	-	-	-	-	-	-
Veh in Median Storage, #	-	0	-	-	0	-	-	0	-	-	0	-
Grade, %	-	0	-	-	0	-	-	0	-	-	0	-
Peak Hour Factor	93	93	93	93	93	93	93	93	93	93	93	93
Heavy Vehicles, %	2	2	2	2	2	2	2	2	2	2	2	2
Mvmt Flow	310	252	10	3	210	19	0	0	0	27	10	217

Major/Minor	Major1			Major2			Minor1			Minor2		
Conflicting Flow All	229	0	0	261	0	0	1215	1111	256	1102	1107	219
Stage 1	-	-	-	-	-	-	876	876	-	226	226	-
Stage 2	-	-	-	-	-	-	339	235	-	876	881	-
Critical Hdwy	4.12	-	-	4.12	-	-	7.12	6.52	6.22	7.12	6.52	6.22
Critical Hdwy Stg 1	-	-	-	-	-	-	6.12	5.52	-	6.12	5.52	-
Critical Hdwy Stg 2	-	-	-	-	-	-	6.12	5.52	-	6.12	5.52	-
Follow-up Hdwy	2.218	-	-	2.218	-	-	3.518	4.018	3.318	3.518	4.018	3.318
Pot Cap-1 Maneuver	1339	-	-	1303	-	-	158	209	783	189	210	821
Stage 1	-	-	-	-	-	-	344	367	-	777	717	-
Stage 2	-	-	-	-	-	-	676	710	-	344	365	-
Platoon blocked, %		-	-		-	-						
Mov Cap-1 Maneuver	1339	-	-	1303	-	-	87	152	783	149	153	821
Mov Cap-2 Maneuver	-	-	-	-	-	-	87	152	-	149	153	-
Stage 1	-	-	-	-	-	-	251	268	-	566	715	-
Stage 2	-	-	-	-	-	-	489	708	-	251	266	-

Approach	EB	WB	NB	SB
HCM Control Delay, s	4.6	0.1	0	19.4
HCM LOS			A	C

Minor Lane/Major Mvmt	NBLn1	EBL	EBT	EBR	WBL	WBT	WBR	SBLn1
Capacity (veh/h)	-	1339	-	-	1303	-	-	499
HCM Lane V/C Ratio	-	0.231	-	-	0.002	-	-	0.509
HCM Control Delay (s)	0	8.5	0	-	7.8	0	-	19.4
HCM Lane LOS	A	A	A	-	A	A	-	C
HCM 95th %tile Q(veh)	-	0.9	-	-	0	-	-	2.8

Intersection	
Int Delay, s/veh	306.5

Movement	EBL	EBT	EBR	WBL	WBT	WBR	NBL	NBT	NBR	SBL	SBT	SBR
Vol, veh/h	484	203	2	1	300	30	24	0	4	23	2	524
Conflicting Peds, #/hr	0	0	0	0	0	0	0	0	0	0	0	0
Sign Control	Free	Free	Free	Free	Free	Free	Stop	Stop	Stop	Stop	Stop	Stop
RT Channelized	-	-	None	-	-	None	-	-	None	-	-	None
Storage Length	-	-	-	-	-	-	-	-	-	-	-	-
Veh in Median Storage, #	-	0	-	-	0	-	-	0	-	-	0	-
Grade, %	-	0	-	-	0	-	-	0	-	-	0	-
Peak Hour Factor	85	85	85	85	85	85	85	85	85	85	85	85
Heavy Vehicles, %	2	2	2	2	2	2	2	2	2	2	2	2
Mvmt Flow	569	239	2	1	353	35	28	0	5	27	2	616

Major/Minor	Major1			Major2			Minor1			Minor2		
Conflicting Flow All	388	0	0	241	0	0	2061	1770	240	1754	1753	371
Stage 1	-	-	-	-	-	-	1379	1379	-	373	373	-
Stage 2	-	-	-	-	-	-	682	391	-	1381	1380	-
Critical Hdwy	4.12	-	-	4.12	-	-	7.12	6.52	6.22	7.12	6.52	6.22
Critical Hdwy Stg 1	-	-	-	-	-	-	6.12	5.52	-	6.12	5.52	-
Critical Hdwy Stg 2	-	-	-	-	-	-	6.12	5.52	-	6.12	5.52	-
Follow-up Hdwy	2.218	-	-	2.218	-	-	3.518	4.018	3.318	3.518	4.018	3.318
Pot Cap-1 Maneuver	1170	-	-	1326	-	-	40	83	799	67	85	675
Stage 1	-	-	-	-	-	-	179	212	-	648	618	-
Stage 2	-	-	-	-	-	-	440	607	-	178	212	-
Platoon blocked, %		-	-		-	-						
Mov Cap-1 Maneuver	1170	-	-	1326	-	-	~ 2	36	799	37	37	675
Mov Cap-2 Maneuver	-	-	-	-	-	-	~ 2	36	-	37	37	-
Stage 1	-	-	-	-	-	-	78	93	-	284	617	-
Stage 2	-	-	-	-	-	-	38	606	-	78	93	-

Approach	EB	WB	NB	SB
HCM Control Delay, s	7.7	0	$ 10331.4	$ 354.9
HCM LOS			F	F

Minor Lane/Major Mvmt	NBLn1	EBL	EBT	EBR	WBL	WBT	WBR	SBLn1
Capacity (veh/h)	2	1170	-	-	1326	-	-	378
HCM Lane V/C Ratio	16.471	0.487	-	-	0.001	-	-	1.709
HCM Control Delay (s)	$ 10331.4	11	0	-	7.7	0		$ 354.9
HCM Lane LOS	F	B	A	-	A	A	-	F
HCM 95th %tile Q(veh)	5.9	2.7	-	-	0	-	-	39.6

Notes

~: Volume exceeds capacity $: Delay exceeds 300s +: Computation Not Defined *: All major volume in platoon

Intersection	
Int Delay, s/veh	124.7

Movement	EBL	EBT	EBR	WBL	WBT	WBR	NBL	NBT	NBR	SBL	SBT	SBR
Vol, veh/h	662	99	0	0	63	32	0	0	0	37	0	661
Conflicting Peds, #/hr	0	0	0	0	0	0	0	0	0	0	0	0
Sign Control	Free	Free	Free	Free	Free	Free	Stop	Stop	Stop	Stop	Stop	Stop
RT Channelized	-	-	None	-	-	None	-	-	None	-	-	None
Storage Length	-	-	-	-	-	-	-	-	-	-	-	-
Veh in Median Storage, #	-	0	-	-	0	-	-	0	-	-	0	-
Grade, %	-	0	-	-	0	-	-	0	-	-	0	-
Peak Hour Factor	93	93	93	93	93	93	93	93	93	93	93	93
Heavy Vehicles, %	2	2	2	2	2	2	2	2	2	2	2	2
Mvmt Flow	712	106	0	0	68	34	0	0	0	40	0	711

Major/Minor	Major1			Major2			Minor1			Minor2		
Conflicting Flow All	102	0	0	106	0	0	1970	1632	106	1615	1615	85
Stage 1	-	-	-	-	-	-	1530	1530	-	85	85	-
Stage 2	-	-	-	-	-	-	440	102	-	1530	1530	-
Critical Hdwy	4.12	-	-	4.12	-	-	7.12	6.52	6.22	7.12	6.52	6.22
Critical Hdwy Stg 1	-	-	-	-	-	-	6.12	5.52	-	6.12	5.52	-
Critical Hdwy Stg 2	-	-	-	-	-	-	6.12	5.52	-	6.12	5.52	-
Follow-up Hdwy	2.218	-	-	2.218	-	-	3.518	4.018	3.318	3.518	4.018	3.318
Pot Cap-1 Maneuver	1490	-	-	1485	-	-	47	101	948	83	104	974
Stage 1	-	-	-	-	-	-	146	179	-	923	824	-
Stage 2	-	-	-	-	-	-	596	811	-	146	179	-
Platoon blocked, %		-	-		-	-						
Mov Cap-1 Maneuver	1490	-	-	1485	-	-	8	50	948	50	51	974
Mov Cap-2 Maneuver	-	-	-	-	-	-	8	50	-	50	51	-
Stage 1	-	-	-	-	-	-	72	88	-	454	824	-
Stage 2	-	-	-	-	-	-	161	811	-	72	88	-

Approach	EB	WB	NB	SB
HCM Control Delay, s	8.4	0	0	268.4
HCM LOS			A	F

Minor Lane/Major Mvmt	NBLn1	EBL	EBT	EBR	WBL	WBT	WBR	SBLn1
Capacity (veh/h)	-	1490	-	-	1485	-	-	492
HCM Lane V/C Ratio	-	0.478	-	-	-	-	-	1.525
HCM Control Delay (s)	0	9.6	0	-	0	-	-	268.4
HCM Lane LOS	A	A	A	-	A	-	-	F
HCM 95th %tile Q(veh)	-	2.7	-	-	0	-	-	39.5

Intersection	
Int Delay, s/veh	2.9

Movement	EBL	EBT	EBR	WBL	WBT	WBR	NBL	NBT	NBR	SBL	SBT	SBR
Vol, veh/h	125	250	10	3	208	10	0	0	0	19	10	35
Conflicting Peds, #/hr	0	0	0	0	0	0	0	0	0	0	0	0
Sign Control	Free	Free	Free	Free	Free	Free	Stop	Stop	Stop	Stop	Stop	Stop
RT Channelized	-	-	None	-	-	None	-	-	None	-	-	None
Storage Length	-	-	-	-	-	-	-	-	-	-	-	-
Veh in Median Storage, #	-	0	-	-	0	-	-	0	-	-	0	-
Grade, %	-	0	-	-	0	-	-	0	-	-	0	-
Peak Hour Factor	93	93	93	93	93	93	93	93	93	93	93	93
Heavy Vehicles, %	2	2	2	2	2	2	2	2	2	2	2	2
Mvmt Flow	134	269	11	3	224	11	0	0	0	20	11	38

Major/Minor	Major1			Major2			Minor1			Minor2		
Conflicting Flow All	234	0	0	280	0	0	803	784	274	778	783	229
Stage 1	-	-	-	-	-	-	543	543	-	235	235	-
Stage 2	-	-	-	-	-	-	260	241	-	543	548	-
Critical Hdwy	4.12	-	-	4.12	-	-	7.12	6.52	6.22	7.12	6.52	6.22
Critical Hdwy Stg 1	-	-	-	-	-	-	6.12	5.52	-	6.12	5.52	-
Critical Hdwy Stg 2	-	-	-	-	-	-	6.12	5.52	-	6.12	5.52	-
Follow-up Hdwy	2.218	-	-	2.218	-	-	3.518	4.018	3.318	3.518	4.018	3.318
Pot Cap-1 Maneuver	1333	-	-	1283	-	-	302	325	765	314	325	810
Stage 1	-	-	-	-	-	-	524	520	-	768	710	-
Stage 2	-	-	-	-	-	-	745	706	-	524	517	-
Platoon blocked, %		-	-		-	-						
Mov Cap-1 Maneuver	1333	-	-	1283	-	-	254	285	765	285	285	810
Mov Cap-2 Maneuver	-	-	-	-	-	-	254	285	-	285	285	-
Stage 1	-	-	-	-	-	-	462	458	-	677	708	-
Stage 2	-	-	-	-	-	-	697	704	-	462	455	-

Approach	EB	WB	NB	SB
HCM Control Delay, s	2.6	0.1	0	14.7
HCM LOS			A	B

Minor Lane/Major Mvmt	NBLn1	EBL	EBT	EBR	WBL	WBT	WBR	SBLn1
Capacity (veh/h)	-	1333	-	-	1283	-	-	441
HCM Lane V/C Ratio	-	0.101	-	-	0.003	-	-	0.156
HCM Control Delay (s)	0	8	0	-	7.8	0	-	14.7
HCM Lane LOS	A	A	A	-	A	A	-	B
HCM 95th %tile Q(veh)	-	0.3	-	-	0	-	-	0.5

Intersection	
Int Delay, s/veh	3

Movement	EBL	EBT	EBR	WBL	WBT	WBR	NBL	NBT	NBR	SBL	SBT	SBR
Vol, veh/h	37	216	2	1	321	10	26	0	4	4	2	96
Conflicting Peds, #/hr	0	0	0	0	0	0	0	0	0	0	0	0
Sign Control	Free	Free	Free	Free	Free	Free	Stop	Stop	Stop	Stop	Stop	Stop
RT Channelized	-	-	None	-	-	None	-	-	None	-	-	None
Storage Length	-	-	-	-	-	-	-	-	-	-	-	-
Veh in Median Storage, #	-	0	-	-	0	-	-	0	-	-	0	-
Grade, %	-	0	-	-	0	-	-	0	-	-	0	-
Peak Hour Factor	85	85	85	85	85	85	85	85	85	85	85	85
Heavy Vehicles, %	2	2	2	2	2	2	2	2	2	2	2	2
Mvmt Flow	44	254	2	1	378	12	31	0	5	5	2	113

Major/Minor	Major1			Major2			Minor1			Minor2		
Conflicting Flow All	389	0	0	256	0	0	786	734	255	731	730	384
Stage 1	-	-	-	-	-	-	342	342	-	386	386	-
Stage 2	-	-	-	-	-	-	444	392	-	345	344	-
Critical Hdwy	4.12	-	-	4.12	-	-	7.12	6.52	6.22	7.12	6.52	6.22
Critical Hdwy Stg 1	-	-	-	-	-	-	6.12	5.52	-	6.12	5.52	-
Critical Hdwy Stg 2	-	-	-	-	-	-	6.12	5.52	-	6.12	5.52	-
Follow-up Hdwy	2.218	-	-	2.218	-	-	3.518	4.018	3.318	3.518	4.018	3.318
Pot Cap-1 Maneuver	1170	-	-	1309	-	-	310	347	784	337	349	664
Stage 1	-	-	-	-	-	-	673	638	-	637	610	-
Stage 2	-	-	-	-	-	-	593	606	-	671	637	-
Platoon blocked, %		-	-		-	-						
Mov Cap-1 Maneuver	1170	-	-	1309	-	-	247	331	784	323	333	664
Mov Cap-2 Maneuver	-	-	-	-	-	-	247	331	-	323	333	-
Stage 1	-	-	-	-	-	-	643	610	-	609	609	-
Stage 2	-	-	-	-	-	-	490	605	-	638	609	-

Approach	EB	WB	NB	SB
HCM Control Delay, s	1.2	0	20.2	12.1
HCM LOS			C	B

Minor Lane/Major Mvmt	NBLn1	EBL	EBT	EBR	WBL	WBT	WBR	SBLn1
Capacity (veh/h)	272	1170	-	-	1309	-	-	626
HCM Lane V/C Ratio	0.13	0.037	-	-	0.001	-	-	0.192
HCM Control Delay (s)	20.2	8.2	0	-	7.8	0	-	12.1
HCM Lane LOS	C	A	A	-	A	A	-	B
HCM 95th %tile Q(veh)	0.4	0.1	-	-	0	-	-	0.7

Intersection	
Int Delay, s/veh	0.7

Movement	EBL	EBT	EBR	WBL	WBT	WBR	NBL	NBT	NBR	SBL	SBT	SBR
Vol, veh/h	2	105	0	0	68	1	0	0	0	10	0	2
Conflicting Peds, #/hr	0	0	0	0	0	0	0	0	0	0	0	0
Sign Control	Free	Free	Free	Free	Free	Free	Stop	Stop	Stop	Stop	Stop	Stop
RT Channelized	-	-	None	-	-	None	-	-	None	-	-	None
Storage Length	-	-	-	-	-	-	-	-	-	-	-	-
Veh in Median Storage, #	-	0	-	-	0	-	-	0	-	-	0	-
Grade, %	-	0	-	-	0	-	-	0	-	-	0	-
Peak Hour Factor	93	93	93	93	93	93	93	93	93	93	93	93
Heavy Vehicles, %	2	2	2	2	2	2	2	2	2	2	2	2
Mvmt Flow	2	113	0	0	73	1	0	0	0	11	0	2

Major/Minor	Major1			Major2			Minor1			Minor2		
Conflicting Flow All	74	0	0	113	0	0	192	191	113	191	191	74
Stage 1	-	-	-	-	-	-	117	117	-	74	74	-
Stage 2	-	-	-	-	-	-	75	74	-	117	117	-
Critical Hdwy	4.12	-	-	4.12	-	-	7.12	6.52	6.22	7.12	6.52	6.22
Critical Hdwy Stg 1	-	-	-	-	-	-	6.12	5.52	-	6.12	5.52	-
Critical Hdwy Stg 2	-	-	-	-	-	-	6.12	5.52	-	6.12	5.52	-
Follow-up Hdwy	2.218	-	-	2.218	-	-	3.518	4.018	3.318	3.518	4.018	3.318
Pot Cap-1 Maneuver	1526	-	-	1476	-	-	768	704	940	769	704	988
Stage 1	-	-	-	-	-	-	888	799	-	935	833	-
Stage 2	-	-	-	-	-	-	934	833	-	888	799	-
Platoon blocked, %		-	-		-	-						
Mov Cap-1 Maneuver	1526	-	-	1476	-	-	766	703	940	768	703	988
Mov Cap-2 Maneuver	-	-	-	-	-	-	766	703	-	768	703	-
Stage 1	-	-	-	-	-	-	887	798	-	934	833	-
Stage 2	-	-	-	-	-	-	932	833	-	887	798	-

Approach	EB	WB	NB	SB
HCM Control Delay, s	0.1	0	0	9.6
HCM LOS			A	A

Minor Lane/Major Mvmt	NBLn1	EBL	EBT	EBR	WBL	WBT	WBR	SBLn1
Capacity (veh/h)	-	1526	-	-	1476	-	-	798
HCM Lane V/C Ratio	-	0.001	-	-	-	-	-	0.016
HCM Control Delay (s)	0	7.4	0	-	0	-	-	9.6
HCM Lane LOS	A	A	A	-	A	-	-	A
HCM 95th %tile Q(veh)	-	0	-	-	0	-	-	0

Intersection	
Int Delay, s/veh	7.7

Movement	EBL	EBT	EBR	WBL	WBT	WBR	NBL	NBT	NBR	SBL	SBT	SBR
Vol, veh/h	296	250	10	3	208	19	0	0	0	26	10	205
Conflicting Peds, #/hr	0	0	0	0	0	0	0	0	0	0	0	0
Sign Control	Free	Free	Free	Free	Free	Free	Stop	Stop	Stop	Stop	Stop	Stop
RT Channelized	-	-	None	-	-	None	-	-	None	-	-	None
Storage Length	-	-	-	-	-	-	-	-	-	-	-	-
Veh in Median Storage, #	-	0	-	-	0	-	-	0	-	-	0	-
Grade, %	-	0	-	-	0	-	-	0	-	-	0	-
Peak Hour Factor	93	93	93	93	93	93	93	93	93	93	93	93
Heavy Vehicles, %	2	2	2	2	2	2	2	2	2	2	2	2
Mvmt Flow	318	269	11	3	224	20	0	0	0	28	11	220

Major/Minor	Major1			Major2			Minor1			Minor2		
Conflicting Flow All	244	0	0	280	0	0	1267	1162	274	1151	1156	234
Stage 1	-	-	-	-	-	-	911	911	-	240	240	-
Stage 2	-	-	-	-	-	-	356	251	-	911	916	-
Critical Hdwy	4.12	-	-	4.12	-	-	7.12	6.52	6.22	7.12	6.52	6.22
Critical Hdwy Stg 1	-	-	-	-	-	-	6.12	5.52	-	6.12	5.52	-
Critical Hdwy Stg 2	-	-	-	-	-	-	6.12	5.52	-	6.12	5.52	-
Follow-up Hdwy	2.218	-	-	2.218	-	-	3.518	4.018	3.318	3.518	4.018	3.318
Pot Cap-1 Maneuver	1322	-	-	1283	-	-	146	195	765	175	197	805
Stage 1	-	-	-	-	-	-	328	353	-	763	707	-
Stage 2	-	-	-	-	-	-	661	699	-	328	351	-
Platoon blocked, %		-	-		-	-						
Mov Cap-1 Maneuver	1322	-	-	1283	-	-	78	139	765	136	140	805
Mov Cap-2 Maneuver	-	-	-	-	-	-	78	139	-	136	140	-
Stage 1	-	-	-	-	-	-	235	252	-	546	705	-
Stage 2	-	-	-	-	-	-	471	697	-	235	251	-

Approach	EB	WB	NB	SB
HCM Control Delay, s	4.6	0.1	0	22
HCM LOS			A	C

Minor Lane/Major Mvmt	NBLn1	EBL	EBT	EBR	WBL	WBT	WBR	SBLn1
Capacity (veh/h)	-	1322	-	-	1283	-	-	466
HCM Lane V/C Ratio	-	0.241	-	-	0.003	-	-	0.556
HCM Control Delay (s)	0	8.6	0	-	7.8	0	-	22
HCM Lane LOS	A	A	A	-	A	A	-	C
HCM 95th %tile Q(veh)	-	0.9	-	-	0	-	-	3.3

Intersection	
Int Delay, s/veh	547.9

Movement	EBL	EBT	EBR	WBL	WBT	WBR	NBL	NBT	NBR	SBL	SBT	SBR
Vol, veh/h	487	216	2	1	321	31	26	0	4	23	2	530
Conflicting Peds, #/hr	0	0	0	0	0	0	0	0	0	0	0	0
Sign Control	Free	Free	Free	Free	Free	Free	Stop	Stop	Stop	Stop	Stop	Stop
RT Channelized	-	-	None	-	-	None	-	-	None	-	-	None
Storage Length	-	-	-	-	-	-	-	-	-	-	-	-
Veh in Median Storage, #	-	0	-	-	0	-	-	0	-	-	0	-
Grade, %	-	0	-	-	0	-	-	0	-	-	0	-
Peak Hour Factor	85	85	85	85	85	85	85	85	85	85	85	85
Heavy Vehicles, %	2	2	2	2	2	2	2	2	2	2	2	2
Mvmt Flow	573	254	2	1	378	36	31	0	5	27	2	624

Major/Minor	Major1			Major2			Minor1			Minor2		
Conflicting Flow All	414	0	0	256	0	0	2112	1817	255	1802	1800	396
Stage 1	-	-	-	-	-	-	1401	1401	-	398	398	-
Stage 2	-	-	-	-	-	-	711	416	-	1404	1402	-
Critical Hdwy	4.12	-	-	4.12	-	-	7.12	6.52	6.22	7.12	6.52	6.22
Critical Hdwy Stg 1	-	-	-	-	-	-	6.12	5.52	-	6.12	5.52	-
Critical Hdwy Stg 2	-	-	-	-	-	-	6.12	5.52	-	6.12	5.52	-
Follow-up Hdwy	2.218	-	-	2.218	-	-	3.518	4.018	3.318	3.518	4.018	3.318
Pot Cap-1 Maneuver	1145	-	-	1309	-	-	37	78	784	62	80	653
Stage 1	-	-	-	-	-	-	174	207	-	628	603	-
Stage 2	-	-	-	-	-	-	424	592	-	173	207	-
Platoon blocked, %		-	-		-	-						
Mov Cap-1 Maneuver	1145	-	-	1309	-	-	~ 1	32	784	33	33	653
Mov Cap-2 Maneuver	-	-	-	-	-	-	~ 1	32	-	33	33	-
Stage 1	-	-	-	-	-	-	72	86	-	261	602	-
Stage 2	-	-	-	-	-	-	~ 19	591	-	72	86	-

Approach	EB	WB	NB	SB
HCM Control Delay, s	7.8	0	$ 22124.7	$ 416.2
HCM LOS			F	F

Minor Lane/Major Mvmt	NBLn1	EBL	EBT	EBR	WBL	WBT	WBR	SBLn1
Capacity (veh/h)	1	1145	-	-	1309	-	-	354
HCM Lane V/C Ratio	35.294	0.5	-	-	0.001	-	-	1.844
HCM Control Delay (s)	$ 22124.7	11.2	0	-	7.8	0		$ 416.2
HCM Lane LOS	F	B	A	-	A	A	-	F
HCM 95th %tile Q(veh)	6.4	2.9	-	-	0	-	-	43.1

Notes

~: Volume exceeds capacity $: Delay exceeds 300s +: Computation Not Defined *: All major volume in platoon

Intersection	
Int Delay, s/veh	132.6

Movement	EBL	EBT	EBR	WBL	WBT	WBR	NBL	NBT	NBR	SBL	SBT	SBR
Vol, veh/h	662	105	0	0	68	32	0	0	0	38	0	661
Conflicting Peds, #/hr	0	0	0	0	0	0	0	0	0	0	0	0
Sign Control	Free	Free	Free	Free	Free	Free	Stop	Stop	Stop	Stop	Stop	Stop
RT Channelized	-	-	None	-	-	None	-	-	None	-	-	None
Storage Length	-	-	-	-	-	-	-	-	-	-	-	-
Veh in Median Storage, #	-	0	-	-	0	-	-	0	-	-	0	-
Grade, %	-	0	-	-	0	-	-	0	-	-	0	-
Peak Hour Factor	93	93	93	93	93	93	93	93	93	93	93	93
Heavy Vehicles, %	2	2	2	2	2	2	2	2	2	2	2	2
Mvmt Flow	712	113	0	0	73	34	0	0	0	41	0	711

Major/Minor	Major1			Major2			Minor1			Minor2		
Conflicting Flow All	108	0	0	113	0	0	1983	1645	113	1627	1627	90
Stage 1	-	-	-	-	-	-	1537	1537	-	90	90	-
Stage 2	-	-	-	-	-	-	446	108	-	1537	1537	-
Critical Hdwy	4.12	-	-	4.12	-	-	7.12	6.52	6.22	7.12	6.52	6.22
Critical Hdwy Stg 1	-	-	-	-	-	-	6.12	5.52	-	6.12	5.52	-
Critical Hdwy Stg 2	-	-	-	-	-	-	6.12	5.52	-	6.12	5.52	-
Follow-up Hdwy	2.218	-	-	2.218	-	-	3.518	4.018	3.318	3.518	4.018	3.318
Pot Cap-1 Maneuver	1483	-	-	1476	-	-	46	99	940	82	102	968
Stage 1	-	-	-	-	-	-	145	178	-	917	820	-
Stage 2	-	-	-	-	-	-	591	806	-	145	178	-
Platoon blocked, %		-	-		-	-						
Mov Cap-1 Maneuver	1483	-	-	1476	-	-	7	48	940	49	50	968
Mov Cap-2 Maneuver	-	-	-	-	-	-	7	48	-	49	50	-
Stage 1	-	-	-	-	-	-	71	87	-	447	820	-
Stage 2	-	-	-	-	-	-	157	806	-	71	87	-

Approach	EB	WB	NB	SB
HCM Control Delay, s	8.3	0	0	287.9
HCM LOS			A	F

Minor Lane/Major Mvmt	NBLn1	EBL	EBT	EBR	WBL	WBT	WBR	SBLn1
Capacity (veh/h)	-	1483	-	-	1476	-	-	479
HCM Lane V/C Ratio	-	0.48	-	-	-	-	-	1.569
HCM Control Delay (s)	0	9.6	0	-	0	-	-	287.9
HCM Lane LOS	A	A	A	-	A	-	-	F
HCM 95th %tile Q(veh)	-	2.7	-	-	0	-	-	41

LINSCOTT, LAW & GREENSPAN, ENGINEERS
600 S. Lake Avenue, Suite 500, Pasadena CA 91106
(626) 796.2322 Fax (626) 792-0941

INTERSECTION CAPACITY UTILIZATION

Rio Hondo Avenue @ Telstar Avenue
Peak hr: AM
Annual Growth: 0.82%

Phase I

N-S St: Rio Hondo Avenue
E-W St: Telstar Avenue
Project: Flair Spectrum Project/1-14-4074-1
File: ICU13

Date: 10/01/2014
Date of Count: 2014
Projection Year: 2016

	2014 EXIST. TRAFFIC			2014 EXISTING WITH PROJECT				2014 EXIST. W/PROJECT + MITIGATION				2016 FUTURE WITHOUT PROJECT				2016 FUTURE WITH PROJECT				2016 FUTURE W/PROJECT + MITIGATION			
	1	2	V/C	Added	Total	2	V/C	Added	Total	2	V/C	Added	Total	2	V/C	Added	Total	2	V/C	Added	Total	2	V/C
Movement	Volume	Capacity	Ratio	Volume	Volume	Capacity	Ratio	Volume	Volume	Capacity	Ratio	Volume	Volume	Capacity	Ratio	Volume	Volume	Capacity	Ratio	Volume	Volume	Capacity	Ratio
Nb Left	0	0	0.000 *	0	0	0	0.000 *	0	0	0	0.000 *	0	0	0	0.000 *	0	0	0	0.000 *	0	0	0	0.000 *
Nb Thru	0	1600	0.000	0	0	1600	0.000	0	0	1600	0.000	0	0	1600	0.000	0	0	1600	0.000	0	0	1600	0.000
Nb Right	0	0	-	0	0	0	-	0	0	0	-	0	0	0	-	0	0	0	-	0	0	0	-
Sb Left	17	0	0.011	3	20	0	0.013	0	20	0	0.013	0	17	0	0.011	3	20	0	0.013	0	20	0	0.013
Sb Thru	9	1600	0.036 *	0	9	1600	0.081 *	0	9	1600	0.081 *	0	9	1600	0.036 *	0	9	1600	0.082 *	0	9	1600	0.018 *
Sb Right	31	0	-	70	101	0	-	0	101	0	-	1	32	0	-	70	102	0	-	0	102	1600	0.063
Eb Left	112	0	0.070	154	266	0	0.166	0	266	0	0.166	2	114	0	0.071	154	268	0	0.167	0	268	1600	0.167 *
Eb Thru	216	1600	0.211 *	0	216	1600	0.307 *	0	216	1600	0.307 *	13	229	1600	0.220 *	0	229	1600	0.316 *	0	229	1600	0.149
Eb Right	9	0	-	0	9	0	-	0	9	0	-	0	9	0	-	0	9	0	-	0	9	0	-
Wb Left	3	0	0.002 *	0	3	0	0.002 *	0	3	0	0.002 *	0	3	0	0.002 *	0	3	0	0.002 *	0	3	0	0.002
Wb Thru	183	1600	0.122	0	183	1600	0.127	0	183	1600	0.127	7	190	1600	0.126	0	190	1600	0.131	0	190	1600	0.131 *
Wb Right	9	0	-	8	17	0	-	0	17	0	-	0	9	0	-	8	17	0	-	0	17	0	-
Yellow Allowance:			0.100 *				0.100 *				0.100 *				0.100 *				0.100 *				0.100 *
(Existing Two-Way Stop Control Intersection)																							
ICU			0.348				0.490				0.490				0.358				0.500				0.417
LOS			A				A				A				A				A				A

** Key conflicting movement as a part of ICU*
1 Counts conducted by: The Traffic Solution
2 Capacity expressed in veh/hour of green

LINSCOTT, LAW & GREENSPAN, ENGINEERS
600 S. Lake Avenue, Suite 500, Pasadena CA 91106
(626) 796.2322 Fax (626) 792-0941

INTERSECTION CAPACITY UTILIZATION

Rio Hondo Avenue @ Telstar Avenue
Peak hr: PM
Annual Growth: 0.82%

Phase I

N-S St: Rio Hondo Avenue
E-W St: Telstar Avenue
Project: Flair Spectrum Project/1-14-4074-1
File: ICU13

Date: 10/01/2014
Date of Count: 2014
Projection Year: 2016

	2014 EXIST. TRAFFIC			2014 EXISTING WITH PROJECT				2014 EXIST. W/PROJECT + MITIGATION				2016 FUTURE WITHOUT PROJECT				2016 FUTURE WITH PROJECT				2016 FUTURE W/PROJECT + MITIGATION			
	1	2	V/C	Added	Total	2	V/C	Added	Total	2	V/C	Added	Total	2	V/C	Added	Total	2	V/C	Added	Total	2	V/C
Movement	Volume	Capacity	Ratio	Volume	Volume	Capacity	Ratio	Volume	Volume	Capacity	Ratio	Volume	Volume	Capacity	Ratio	Volume	Volume	Capacity	Ratio	Volume	Volume	Capacity	Ratio
Nb Left	23	0	0.014 *	0	23	0	0.014 *	0	23	0	0.014 *	0	23	0	0.015 *	0	23	0	0.015 *	0	23	0	0.015 *
Nb Thru	0	1600	0.017	0	0	1600	0.017	0	0	1600	0.017	0	0	1600	0.017	0	0	1600	0.017	0	0	1600	0.017
Nb Right	4	0	-	0	4	0	-	0	4	0	-	0	4	0	-	0	4	0	-	0	4	0	-
Sb Left	4	0	0.003	17	21	0	0.013	0	21	0	0.013	0	4	0	0.003	17	21	0	0.013	0	21	0	0.013
Sb Thru	2	1600	0.058 *	0	2	1600	0.309 *	0	2	1600	0.309 *	0	2	1600	0.058 *	0	2	1600	0.310 *	0	2	1600	0.014
Sb Right	86	0	-	386	472	0	-	0	472	0	-	1	87	0	-	386	473	0	-	0	473	1600	0.296 *
Eb Left	33	0	0.021 *	372	405	0	0.253 *	0	405	0	0.253 *	1	34	0	0.021 *	372	406	0	0.253 *	0	406	1600	0.253
Eb Thru	182	1600	0.136	0	182	1600	0.368	0	182	1600	0.368	16	198	1600	0.146	0	198	1600	0.378	0	198	1600	0.125
Eb Right	2	0	-	0	2	0	-	0	2	0	-	0	2	0	-	0	2	0	-	0	2	0	-
Wb Left	1	0	0.001	0	1	0	0.001	0	1	0	0.001	0	1	0	0.001	0	1	0	0.001	0	1	0	0.001
Wb Thru	285	1600	0.184 *	0	285	1600	0.195 *	0	285	1600	0.195 *	8	293	1600	0.189 *	0	293	1600	0.200 *	0	293	1600	0.200 *
Wb Right	9	0	-	17	26	0	-	0	26	0	-	0	9	0	-	17	26	0	-	0	26	0	-
Yellow Allowance:			0.100 *				0.100 *				0.100 *				0.100 *				0.100 *				0.100 *
(Existing Two-Way Stop Control Intersection)																							
ICU			0.377				0.872				0.872				0.383				0.878				0.864
LOS			A				D				D				A				D				D

** Key conflicting movement as a part of ICU*
1 Counts conducted by: The Traffic Solution
2 Capacity expressed in veh/hour of green

LINSCOTT, LAW & GREENSPAN, ENGINEERS
600 S. Lake Avenue, Suite 500, Pasadena CA 91106
(626) 796.2322 Fax (626) 792-0941

INTERSECTION CAPACITY UTILIZATION

Rio Hondo Avenue @ Telstar Avenue
Peak hr: SAT MID-DAY
Annual Growth: 0.82%

Phase I

N-S St: Rio Hondo Avenue
E-W St: Telstar Avenue
Project: Flair Spectrum Project/1-14-4074-1
File: ICU13

Date: 10/01/2014
Date of Count: 2014
Projection Year: 2016

	2014 EXIST. TRAFFIC			2014 EXISTING WITH PROJECT				2014 EXIST. W/PROJECT + MITIGATION				2016 FUTURE WITHOUT PROJECT				2016 FUTURE WITH PROJECT				2016 FUTURE W/PROJECT + MITIGATION			
	1	2	V/C	Added	Total	2	V/C	Added	Total	2	V/C	Added	Total	2	V/C	Added	Total	2	V/C	Added	Total	2	V/C
Movement	Volume	Capacity	Ratio	Volume	Volume	Capacity	Ratio	Volume	Volume	Capacity	Ratio	Volume	Volume	Capacity	Ratio	Volume	Volume	Capacity	Ratio	Volume	Volume	Capacity	Ratio
Nb Left	0	0	0.000 *	0	0	0	0.000 *	0	0	0	0.000 *	0	0	0	0.000 *	0	0	0	0.000 *	0	0	0	0.000
Nb Thru	0	1600	0.000	0	0	1600	0.000	0	0	1600	0.000	0	0	1600	0.000	0	0	1600	0.000	0	0	1600	0.000
Nb Right	0	0	-	0	0	0	-	0	0	0	-	0	0	0	-	0	0	0	-	0	0	0	-
Sb Left	9	0	0.006	26	35	0	0.022	0	35	0	0.022	0	9	0	0.006	26	35	0	0.022	0	35	0	0.022
Sb Thru	0	1600	0.007 *	0	0	1600	0.398 *	0	0	1600	0.398 *	0	0	1600	0.007 *	0	0	1600	0.398 *	0	0	1600	0.022
Sb Right	2	0	-	600	602	0	-	0	602	0	-	0	2	0	-	600	602	0	-	0	602	1600	0.376
Eb Left	2	0	0.001	603	605	0	0.378 *	0	605	0	0.378 *	0	2	0	0.001	603	605	0	0.378	0	605	1600	0.378 *
Eb Thru	87	1600	0.056 *	0	87	1600	0.433	0	87	1600	0.433	9	96	1600	0.062 *	0	96	1600	0.438 *	0	96	1600	0.060
Eb Right	0	0	-	0	0	0	-	0	0	0	-	0	0	0	-	0	0	0	-	0	0	0	-
Wb Left	0	0	0.000 *	0	0	0	0.000	0	0	0	0.000	0	0	0	0.000 *	0	0	0	0.000 *	0	0	0	0.000
Wb Thru	59	1600	0.038	0	59	1600	0.055 *	0	59	1600	0.055 *	3	62	1600	0.039	0	62	1600	0.057	0	62	1600	0.057 *
Wb Right	1	0	-	28	29	0	-	0	29	0	-	0	1	0	-	28	29	0	-	0	29	0	-
Yellow Allowance:			0.100 *				0.100 *				0.100 *				0.100 *				0.100 *				0.100 *
(Existing Two-Way Stop Control Intersection)																							
ICU			0.163				0.931				0.931				0.169				0.937				0.557
LOS			A				E				E				A				E				A

** Key conflicting movement as a part of ICU*
1 Counts conducted by: The Traffic Solution
2 Capacity expressed in veh/hour of green

LINSCOTT, LAW & GREENSPAN, ENGINEERS
600 S. Lake Avenue, Suite 500, Pasadena CA 91106
(626) 796.2322 Fax (626) 792-0941

INTERSECTION CAPACITY UTILIZATION

Rio Hondo Avenue @ Telstar Avenue
Peak hr: AM
Annual Growth: 0.82%

Phases I & II

N-S St: Rio Hondo Avenue
E-W St: Telstar Avenue
Project: Flair Spectrum Project/1-14-4074-1
File: ICU13

Date: 10/01/2014
Date of Count: 2014
Projection Year: 2019

	2014 EXIST. TRAFFIC			2014 EXISTING WITH PROJECT				2014 EXIST. W/PROJECT + MITIGATION				2019 FUTURE WITHOUT PROJECT				2019 FUTURE WITH PROJECT				2019 FUTURE W/PROJECT + MITIGATION			
	1	2	V/C	Added	Total	2	V/C	Added	Total	2	V/C	Added	Total	2	V/C	Added	Total	2	V/C	Added	Total	2	V/C
Movement	Volume	Capacity	Ratio	Volume	Volume	Capacity	Ratio	Volume	Volume	Capacity	Ratio	Volume	Volume	Capacity	Ratio	Volume	Volume	Capacity	Ratio	Volume	Volume	Capacity	Ratio
Nb Left	0	0	0.000 *	0	0	0	0.000 *	0	0	0	0.000 *	0	0	0	0.000 *	0	0	0	0.000 *	0	0	0	0.000 *
Nb Thru	0	1600	0.000	0	0	1600	0.000	0	0	1600	0.000	0	0	1600	0.000	0	0	1600	0.000	0	0	1600	0.000
Nb Right	0	0	-	0	0	0	-	0	0	0	-	0	0	0	-	0	0	0	-	0	0	0	-
Sb Left	17	0	0.011	7	24	0	0.015	0	24	0	0.015	1	18	0	0.011	7	25	0	0.015	0	25	0	0.015
Sb Thru	9	1600	0.036 *	0	9	1600	0.146 *	0	9	1600	0.146 *	0	9	1600	0.037 *	0	9	1600	0.148 *	0	9	1600	0.021 *
Sb Right	31	0	-	170	201	0	-	0	201	0	-	1	32	0	-	170	202	0	-	0	202	1600	0.126
Eb Left	112	0	0.070	171	283	0	0.177	0	283	0	0.177	5	117	0	0.073	171	288	0	0.180	0	288	1600	0.180 *
Eb Thru	216	1600	0.211 *	0	216	1600	0.318 *	0	216	1600	0.318 *	18	234	1600	0.225 *	0	234	1600	0.332 *	0	234	1600	0.152
Eb Right	9	0	-	0	9	0	-	0	9	0	-	0	9	0	-	0	9	0	-	0	9	0	-
Wb Left	3	0	0.002 *	0	3	0	0.002 *	0	3	0	0.002 *	0	3	0	0.002 *	0	3	0	0.002 *	0	3	0	0.002
Wb Thru	183	1600	0.122	0	183	1600	0.128	0	183	1600	0.128	12	195	1600	0.129	0	195	1600	0.135	0	195	1600	0.135 *
Wb Right	9	0	-	9	18	0	-	0	18	0	-	0	9	0	-	9	18	0	-	0	18	0	-
Yellow Allowance:			0.100 *				0.100 *				0.100 *				0.100 *				0.100 *				0.100 *
(Existing Two-Way Stop Control Intersection)																							
ICU			0.348				0.566				0.566				0.364				0.582				0.436
LOS			A				A				A				A				A				A

** Key conflicting movement as a part of ICU*
1 Counts conducted by: The Traffic Solution
2 Capacity expressed in veh/hour of green

LINSCOTT, LAW & GREENSPAN, ENGINEERS
600 S. Lake Avenue, Suite 500, Pasadena CA 91106
(626) 796.2322 Fax (626) 792-0941

INTERSECTION CAPACITY UTILIZATION

Rio Hondo Avenue @ Telstar Avenue
Peak hr: PM
Annual Growth: 0.82%

Phases I & II

N-S St: Rio Hondo Avenue
E-W St: Telstar Avenue
Project: Flair Spectrum Project/1-14-4074-1
File: ICU13

Date: 10/01/2014
Date of Count: 2014
Projection Year: 2019

	2014 EXIST. TRAFFIC			2014 EXISTING WITH PROJECT				2014 EXIST. W/PROJECT + MITIGATION				2019 FUTURE WITHOUT PROJECT				2019 FUTURE WITH PROJECT				2019 FUTURE W/PROJECT + MITIGATION			
	1	2	V/C	Added	Total	2	V/C	Added	Total	2	V/C	Added	Total	2	V/C	Added	Total	2	V/C	Added	Total	2	V/C
Movement	Volume	Capacity	Ratio	Volume	Volume	Capacity	Ratio	Volume	Volume	Capacity	Ratio	Volume	Volume	Capacity	Ratio	Volume	Volume	Capacity	Ratio	Volume	Volume	Capacity	Ratio
Nb Left	23	0	0.014 *	0	23	0	0.014 *	0	23	0	0.014 *	1	24	0	0.015 *	0	24	0	0.015 *	0	24	0	0.015 *
Nb Thru	0	1600	0.017	0	0	1600	0.017	0	0	1600	0.017	0	0	1600	0.018	0	0	1600	0.018	0	0	1600	0.018
Nb Right	4	0	-	0	4	0	-	0	4	0	-	0	4	0	-	0	4	0	-	0	4	0	-
Sb Left	4	0	0.003	19	23	0	0.014	0	23	0	0.014	0	4	0	0.003	19	23	0	0.014	0	23	0	0.014
Sb Thru	2	1600	0.058 *	0	2	1600	0.341 *	0	2	1600	0.341 *	0	2	1600	0.060 *	0	2	1600	0.343 *	0	2	1600	0.016
Sb Right	86	0	-	434	520	0	-	0	520	0	-	4	90	0	-	434	524	0	-	0	524	1600	0.327 *
Eb Left	33	0	0.021 *	450	483	0	0.302 *	0	483	0	0.302 *	1	34	0	0.021 *	450	484	0	0.303 *	0	484	1600	0.303
Eb Thru	182	1600	0.136	0	182	1600	0.417	0	182	1600	0.417	21	203	1600	0.149	0	203	1600	0.431	0	203	1600	0.128
Eb Right	2	0	-	0	2	0	-	0	2	0	-	0	2	0	-	0	2	0	-	0	2	0	-
Wb Left	1	0	0.001	0	1	0	0.001	0	1	0	0.001	0	1	0	0.001	0	1	0	0.001	0	1	0	0.001
Wb Thru	285	1600	0.184 *	0	285	1600	0.198 *	0	285	1600	0.198 *	15	300	1600	0.194 *	0	300	1600	0.207 *	0	300	1600	0.207 *
Wb Right	9	0	-	21	30	0	-	0	30	0	-	0	9	0	-	21	30	0	-	0	30	0	-
Yellow Allowance:			0.100 *				0.100 *				0.100 *				0.100 *				0.100 *				0.100 *
(Existing Two-Way Stop Control Intersection)																							
ICU			0.377				0.954				0.954				0.390				0.968				0.952
LOS			A				E				E				A				E				E

** Key conflicting movement as a part of ICU*
1 Counts conducted by: The Traffic Solution
2 Capacity expressed in veh/hour of green

LINSCOTT, LAW & GREENSPAN, ENGINEERS
600 S. Lake Avenue, Suite 500, Pasadena CA 91106
(626) 796.2322 Fax (626) 792-0941

INTERSECTION CAPACITY UTILIZATION

Rio Hondo Avenue @ Telstar Avenue
Peak hr: SAT MID-DAY
Annual Growth: 0.82%

Phases I & II

N-S St: Rio Hondo Avenue
E-W St: Telstar Avenue
Project: Flair Spectrum Project/1-14-4074-1
File: ICU13

Date: 10/01/2014
Date of Count: 2014
Projection Year: 2019

	2014 EXIST. TRAFFIC			2014 EXISTING WITH PROJECT				2014 EXIST. W/PROJECT + MITIGATION				2019 FUTURE WITHOUT PROJECT				2019 FUTURE WITH PROJECT				2019 FUTURE W/PROJECT + MITIGATION			
	1	2	V/C	Added	Total	2	V/C	Added	Total	2	V/C	Added	Total	2	V/C	Added	Total	2	V/C	Added	Total	2	V/C
Movement	Volume	Capacity	Ratio	Volume	Volume	Capacity	Ratio	Volume	Volume	Capacity	Ratio	Volume	Volume	Capacity	Ratio	Volume	Volume	Capacity	Ratio	Volume	Volume	Capacity	Ratio
Nb Left	0	0	0.000 *	0	0	0	0.000 *	0	0	0	0.000 *	0	0	0	0.000 *	0	0	0	0.000 *	0	0	0	0.000
Nb Thru	0	1600	0.000	0	0	1600	0.000	0	0	1600	0.000	0	0	1600	0.000	0	0	1600	0.000	0	0	1600	0.000
Nb Right	0	0	-	0	0	0	-	0	0	0	-	0	0	0	-	0	0	0	-	0	0	0	-
Sb Left	9	0	0.006	28	37	0	0.023	0	37	0	0.023	0	9	0	0.006	28	37	0	0.023	0	37	0	0.023
Sb Thru	0	1600	0.007 *	0	0	1600	0.436 *	0	0	1600	0.436 *	0	0	1600	0.007 *	0	0	1600	0.437 *	0	0	1600	0.023
Sb Right	2	0	-	659	661	0	-	0	661	0	-	0	2	0	-	659	661	0	-	0	661	1600	0.413
Eb Left	2	0	0.001	660	662	0	0.414 *	0	662	0	0.414 *	0	2	0	0.001	660	662	0	0.414	0	662	1600	0.414 *
Eb Thru	87	1600	0.056 *	0	87	1600	0.468	0	87	1600	0.468	12	99	1600	0.063 *	0	99	1600	0.475 *	0	99	1600	0.062
Eb Right	0	0	-	0	0	0	-	0	0	0	-	0	0	0	-	0	0	0	-	0	0	0	-
Wb Left	0	0	0.000 *	0	0	0	0.000	0	0	0	0.000	0	0	0	0.000 *	0	0	0	0.000 *	0	0	0	0.000
Wb Thru	59	1600	0.038	0	59	1600	0.057 *	0	59	1600	0.057 *	4	63	1600	0.040	0	63	1600	0.060	0	63	1600	0.060 *
Wb Right	1	0	-	31	32	0	-	0	32	0	-	0	1	0	-	31	32	0	-	0	32	0	-
Yellow Allowance:			0.100 *				0.100 *				0.100 *				0.100 *				0.100 *				0.100 *
(Existing Two-Way Stop Control Intersection)																							
ICU			0.163				1.007				1.007				0.170				1.012				0.597
LOS			A				F				F				A				F				A

** Key conflicting movement as a part of ICU*
1 Counts conducted by: The Traffic Solution
2 Capacity expressed in veh/hour of green

LINSCOTT, LAW & GREENSPAN, ENGINEERS
600 S. Lake Avenue, Suite 500, Pasadena CA 91106
(626) 796.2322 Fax (626) 792-0941

INTERSECTION CAPACITY UTILIZATION

N-S St: Rio Hondo Avenue
E-W St: Telstar Avenue
Project: Flair Spectrum Project/1-14-4074-1
File: ICU13

Rio Hondo Avenue @ Telstar Avenue
Peak hr: AM
Annual Growth: 0.52%

General Plan Buildout (Phases I & II)

Date: 10/01/2014
Date of Count: 2014
Projection Year: 2035

	2014 EXIST. TRAFFIC			2014 EXISTING WITH PROJECT				2014 EXIST. W/PROJECT + MITIGATION				2035 FUTURE WITHOUT PROJECT				2035 FUTURE WITH PROJECT				2035 FUTURE W/PROJECT + MITIGATION			
	1	2	V/C	Added	Total	2	V/C	Added	Total	2	V/C	Added	Total	2	V/C	Added	Total	2	V/C	Added	Total	2	V/C
Movement	Volume	Capacity	Ratio	Volume	Volume	Capacity	Ratio	Volume	Volume	Capacity	Ratio	Volume	Volume	Capacity	Ratio	Volume	Volume	Capacity	Ratio	Volume	Volume	Capacity	Ratio
Nb Left	0	0	0.000 *	0	0	0	0.000 *	0	0	0	0.000 *	0	0	0	0.000 *	0	0	0	0.000 *	0	0	0	0.000 *
Nb Thru	0	1600	0.000	0	0	1600	0.000	0	0	1600	0.000	0	0	1600	0.000	0	0	1600	0.000	0	0	1600	0.000
Nb Right	0	0	-	0	0	0	-	0	0	0	-	0	0	0	-	0	0	0	-	0	0	0	-
Sb Left	17	0	0.011	7	24	0	0.015	0	24	0	0.015	2	19	0	0.012	7	26	0	0.016	0	26	0	0.016
Sb Thru	9	1600	0.036 *	0	9	1600	0.146 *	0	9	1600	0.146 *	1	10	1600	0.040 *	0	10	1600	0.150 *	0	10	1600	0.022 *
Sb Right	31	0	-	170	201	0	-	0	201	0	-	4	35	0	-	170	205	0	-	0	205	1600	0.128
Eb Left	112	0	0.070	171	283	0	0.177	0	283	0	0.177	13	125	0	0.078	171	296	0	0.185	0	296	1600	0.185 *
Eb Thru	216	1600	0.211 *	0	216	1600	0.318 *	0	216	1600	0.318 *	34	250	1600	0.240 *	0	250	1600	0.347 *	0	250	1600	0.162
Eb Right	9	0	-	0	9	0	-	0	9	0	-	1	10	0	-	0	10	0	-	0	10	0	-
Wb Left	3	0	0.002 *	0	3	0	0.002 *	0	3	0	0.002 *	0	3	0	0.002 *	0	3	0	0.002 *	0	3	0	0.002
Wb Thru	183	1600	0.122	0	183	1600	0.128	0	183	1600	0.128	25	208	1600	0.138	0	208	1600	0.144	0	208	1600	0.144 *
Wb Right	9	0	-	9	18	0	-	0	18	0	-	1	10	0	-	9	19	0	-	0	19	0	-
Yellow Allowance:			0.100 *				0.100 *				0.100 *				0.100 *				0.100 *				0.100 *
(Existing Two-Way Stop Control Intersection)																							
ICU			0.348				0.566				0.566				0.382				0.600				0.451
LOS			A				A				A				A				A				A

** Key conflicting movement as a part of ICU*
1 Counts conducted by: The Traffic Solution
2 Capacity expressed in veh/hour of green

LINSCOTT, LAW & GREENSPAN, ENGINEERS
600 S. Lake Avenue, Suite 500, Pasadena CA 91106
(626) 796.2322 Fax (626) 792-0941

INTERSECTION CAPACITY UTILIZATION

N-S St: Rio Hondo Avenue
E-W St: Telstar Avenue
Project: Flair Spectrum Project/1-14-4074-1
File: ICU13

Rio Hondo Avenue @ Telstar Avenue
Peak hr: PM
Annual Growth: 0.52%

General Plan Buildout (Phases I & II)

Date: 10/01/2014
Date of Count: 2014
Projection Year: 2035

	2014 EXIST. TRAFFIC			2014 EXISTING WITH PROJECT				2014 EXIST. W/PROJECT + MITIGATION				2035 FUTURE WITHOUT PROJECT				2035 FUTURE WITH PROJECT				2035 FUTURE W/PROJECT + MITIGATION			
	1	2	V/C	Added	Total	2	V/C	Added	Total	2	V/C	Added	Total	2	V/C	Added	Total	2	V/C	Added	Total	2	V/C
Movement	Volume	Capacity	Ratio	Volume	Volume	Capacity	Ratio	Volume	Volume	Capacity	Ratio	Volume	Volume	Capacity	Ratio	Volume	Volume	Capacity	Ratio	Volume	Volume	Capacity	Ratio
Nb Left	23	0	0.014 *	0	23	0	0.014 *	0	23	0	0.014 *	3	26	0	0.016 *	0	26	0	0.016 *	0	26	0	0.016 *
Nb Thru	0	1600	0.017	0	0	1600	0.017	0	0	1600	0.017	0	0	1600	0.019	0	0	1600	0.019	0	0	1600	0.019
Nb Right	4	0	-	0	4	0	-	0	4	0	-	0	4	0	-	0	4	0	-	0	4	0	-
Sb Left	4	0	0.003	19	23	0	0.014	0	23	0	0.014	0	4	0	0.003	19	23	0	0.015	0	23	0	0.015
Sb Thru	2	1600	0.058 *	0	2	1600	0.341 *	0	2	1600	0.341 *	0	2	1600	0.064 *	0	2	1600	0.347 *	0	2	1600	0.016
Sb Right	86	0	-	434	520	0	-	0	520	0	-	10	96	0	-	434	530	0	-	0	530	1600	0.331 *
Eb Left	33	0	0.021 *	450	483	0	0.302 *	0	483	0	0.302 *	4	37	0	0.023 *	450	487	0	0.304 *	0	487	1600	0.304
Eb Thru	182	1600	0.136	0	182	1600	0.417	0	182	1600	0.417	34	216	1600	0.159	0	216	1600	0.441	0	216	1600	0.136
Eb Right	2	0	-	0	2	0	-	0	2	0	-	0	2	0	-	0	2	0	-	0	2	0	-
Wb Left	1	0	0.001	0	1	0	0.001	0	1	0	0.001	0	1	0	0.001	0	1	0	0.001	0	1	0	0.001
Wb Thru	285	1600	0.184 *	0	285	1600	0.198 *	0	285	1600	0.198 *	36	321	1600	0.207 *	0	321	1600	0.221 *	0	321	1600	0.221 *
Wb Right	9	0	-	21	30	0	-	0	30	0	-	1	10	0	-	21	31	0	-	0	31	0	-
Yellow Allowance:			0.100 *				0.100 *				0.100 *				0.100 *				0.100 *				0.100 *
(Existing Two-Way Stop Control Intersection)																							
ICU			0.377				0.954				0.954				0.411				0.988				0.972
LOS			A				E				E				A				E				E

** Key conflicting movement as a part of ICU*
1 Counts conducted by: The Traffic Solution
2 Capacity expressed in veh/hour of green

LINSCOTT, LAW & GREENSPAN, ENGINEERS
600 S. Lake Avenue, Suite 500, Pasadena CA 91106
(626) 796.2322 Fax (626) 792-0941

INTERSECTION CAPACITY UTILIZATION

N-S St: Rio Hondo Avenue
E-W St: Telstar Avenue
Project: Flair Spectrum Project/1-14-4074-1
File: ICU13

Rio Hondo Avenue @ Telstar Avenue
Peak hr: SAT MID-DAY
Annual Growth: 0.52%

General Plan Buildout (Phases I & II)

Date: 10/01/2014
Date of Count: 2014
Projection Year: 2035

	2014 EXIST. TRAFFIC			2014 EXISTING WITH PROJECT				2014 EXIST. W/PROJECT + MITIGATION				2035 FUTURE WITHOUT PROJECT				2035 FUTURE WITH PROJECT				2035 FUTURE W/PROJECT + MITIGATION			
	1	2	V/C	Added	Total	2	V/C	Added	Total	2	V/C	Added	Total	2	V/C	Added	Total	2	V/C	Added	Total	2	V/C
Movement	Volume	Capacity	Ratio	Volume	Volume	Capacity	Ratio	Volume	Volume	Capacity	Ratio	Volume	Volume	Capacity	Ratio	Volume	Volume	Capacity	Ratio	Volume	Volume	Capacity	Ratio
Nb Left	0	0	0.000 *	0	0	0	0.000 *	0	0	0	0.000 *	0	0	0	0.000 *	0	0	0	0.000 *	0	0	0	0.000
Nb Thru	0	1600	0.000	0	0	1600	0.000	0	0	1600	0.000	0	0	1600	0.000	0	0	1600	0.000	0	0	1600	0.000
Nb Right	0	0	-	0	0	0	-	0	0	0	-	0	0	0	-	0	0	0	-	0	0	0	-
Sb Left	9	0	0.006	28	37	0	0.023	0	37	0	0.023	1	10	0	0.006	28	38	0	0.024	0	38	0	0.024
Sb Thru	0	1600	0.007 *	0	0	1600	0.436 *	0	0	1600	0.436 *	0	0	1600	0.008 *	0	0	1600	0.437 *	0	0	1600	0.024
Sb Right	2	0	-	659	661	0	-	0	661	0	-	0	2	0	-	659	661	0	-	0	661	1600	0.413
Eb Left	2	0	0.001	660	662	0	0.414 *	0	662	0	0.414 *	0	2	0	0.001	660	662	0	0.414	0	662	1600	0.414 *
Eb Thru	87	1600	0.056 *	0	87	1600	0.468	0	87	1600	0.468	18	105	1600	0.067 *	0	105	1600	0.480 *	0	105	1600	0.066
Eb Right	0	0	-	0	0	0	-	0	0	0	-	0	0	0	-	0	0	0	-	0	0	0	-
Wb Left	0	0	0.000 *	0	0	0	0.000	0	0	0	0.000	0	0	0	0.000 *	0	0	0	0.000 *	0	0	0	0.000
Wb Thru	59	1600	0.038	0	59	1600	0.057 *	0	59	1600	0.057 *	9	68	1600	0.043	0	68	1600	0.062	0	68	1600	0.062 *
Wb Right	1	0	-	31	32	0	-	0	32	0	-	0	1	0	-	31	32	0	-	0	32	0	-
Yellow Allowance:			0.100 *				0.100 *				0.100 *				0.100 *				0.100 *				0.100 *
(Existing Two-Way Stop Control Intersection)																							
ICU			0.163				1.007				1.007				0.175				1.017				0.600
LOS			A				F				F				A				F				A

** Key conflicting movement as a part of ICU*
1 Counts conducted by: The Traffic Solution
2 Capacity expressed in veh/hour of green